FCC Caution.

§ 15.19 Labelling requirements.
This device complies with part 15 of the FCC Rules. Operation is subj ect to the following two conditions: (1) This device may not cause ha rmful interference, and (2) this device must accept any interference received, including interference that may cause undesired operation.

§ 15.21 Information to user.
Any Changes or modifications not expressly approved by the party resp onsible for compliance could void the user's authority to operate the equipment.

§ 15.105 Information to the user.
Note: This equipment has been tested and found to comply with the lim its for a Class B digital device, pursuant to part 15 of the FCC Rule s. These limits are designed to provide reasonable protection against harmful interference in a residential installation. This equipment g enerates uses and can radiate radio frequency energy and, if not inst alled and used in accordance with the instructions, may cause harmful interference to radio communications. However, there is no guarantee that interference will not occur in a particular installation. If th is equipment does cause harmful interference to radio or television r eception, which can be determined by turning the equipment off and on , the user is encouraged to try to correct the interference by one or more of the following measures:
-Reorient or relocate the receiving antenna.
-Increase the separation between the equipment and receiver.
-Connect the equipment into an outlet on a circuit different from tha t to which the receiver is connected.
-Consult the dealer or an experienced radio/TV technician for help.

CONTENTS

INTRODUCTION ---------- 1
DESCRIPTION ---------- 1-2
USING THE WIRELESS RECEIVER ---------- 3
USING THE HANDHELD MICROPHONE TRANSMITTERS ---------- 3
USING THE BODY-PACK TRANSMITTERS ---------- 4
TIPS AND TROUBLESHOOTING ---------- 4-5
SPECIFICATIONS AND INFORMATION ---------- 5
WARRANTY INFORMATION ---------- 6

INTRODUCTION

The UHF-11 Wireless System is the finest in its class.This system willgive you excellent performance for years to come.

System Contents

The UHF-11 Wireless System contains the following components:

- Single channel wireless receiver
- Single wireless transmitter.
- Adapter
- Audio cable

DESCRIPTION

Wireless Receiver (Figure 1)

1. Power Switch.
2. AF Indicator.
3. RF Diversity Indicator
4. RF Signal Indicator.
5. Power Indicator.
6. Volume.
7. Telescoping Antennas: to receive signals from the transmitter.
8. Independent Audio Output Connectors.
9. Balanced Output XLR Connectors.
10. Squelch.
11. Power Input Connector. Connect to a 110V AC or 220V AC power adapter.

UHF-11 FRONT

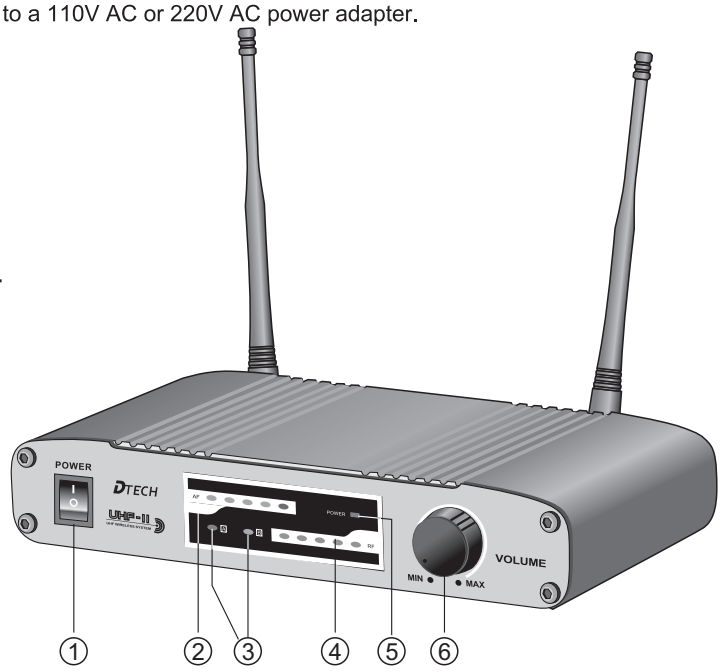

Figure 1

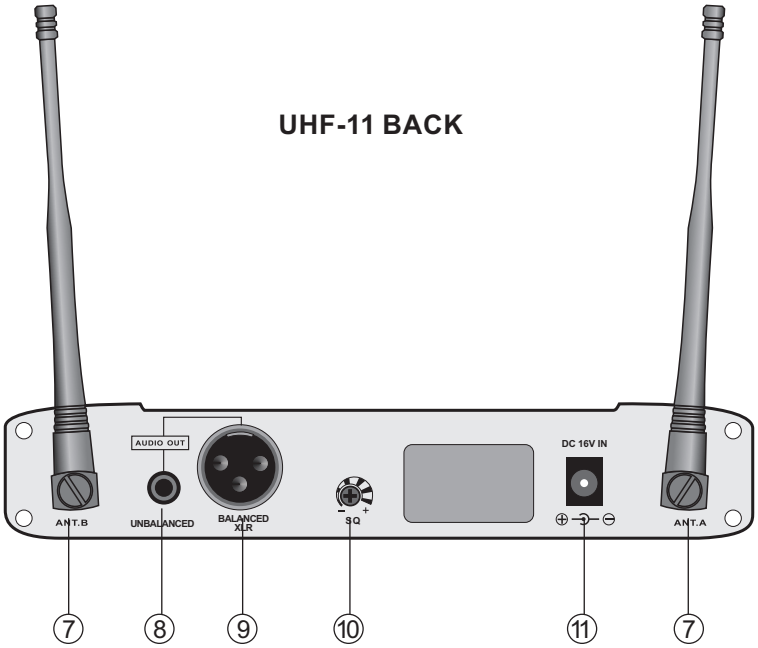

Handheld Microphone Transmitter (Figure 2)

1. **Power ON/OFF and Mute ON/OFF Switch.**
   When this red light is glowing,you have 20 minutes or less of useful operating time;change the battery.
2. **2 AA Alkaline Battery.** Provides power to the microphone transmitter. Typical battery life is 8 hours.
3. **Battery Cover**. Take off the battery cover for two 1.5V alkaline batteries.

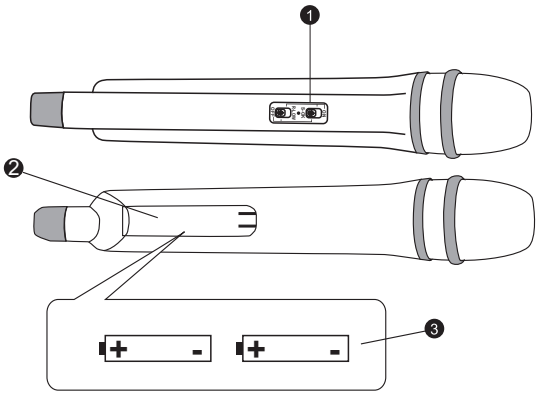

FIGURE 2

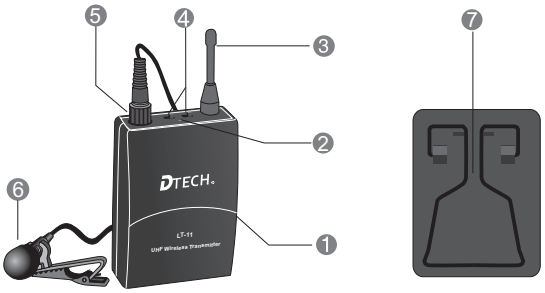

FIGURE 3

Body-Pack Transmitter (Figure 3)

1.Battery Compartment.

2.Power and Low Battery Indicator. When this red light is glowing,you have 20 minutes or less of useful operating time; change the battery.

3. Antenna

4.Power and Mic Mute ON/OFF Switch.

5.Microphone Input Connector. Connector provides connection to a variety of lavaliere and headset microphone cables.

6.Lavalier Microphone. Condenser lavaliere microphone supplied with a mount that clips onto a tie,lapel,or acoustic instrument.

7.Belt Clip.

USING THE WIRELESS RECEIVER

Connecting the Wireless Receiver

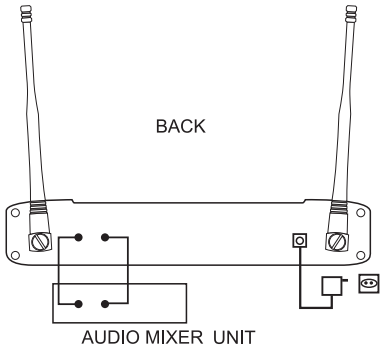

FIGURE 4

1. Connect the receiver output to the Audio Mixer unit using unbalanced,single-conductor,shielded cables with 1/4-inch phone plugs/or balanced XLR.
2. Connect the AC adapter to the POWER jack on the rear panel of the receiver.
3. Plug the AC adapter into an appropriate power outlet.

USING THE HANDHELD MICROPHONE TRANSMITTERS

Operating the Hand Microphone Transmitters (Figure 5)

1. Press the Power ON/OFF switch on the receiver to the ON postion .
2. Slide the transmitter Power ON/OFF switch to the ON position, and Mute ON/OFF to OFF position. Check the battery level. If the LOW BATTERY indicator is lit, see Transmitter Battery Installation.
3. Check the RF indicator on the receiver to see if the radio signal is being received.
4. If the RF light is lit,begin speaking or singing.
5. During the performance or presentation,slide the Mute ON/OFF switch to the ON position when the microphone is not being used.
6. When the performance or presentation is over, slide the transmitter Power ON/OFF switch to OFF position and Mute ON/OFF to OFF position, to conserve battery power.

Transmitter Battery Installation

1. Slide the transmitter Power ON/OFF switch to the OFF position.
2. Take off the transmitter battery cover to expose the battery terminals,as shown in Figure 6.

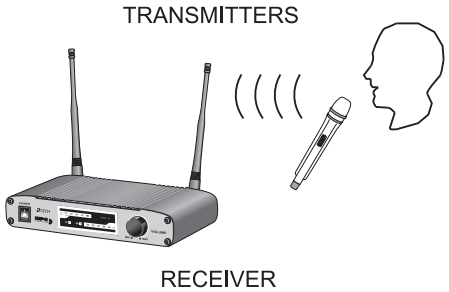

FIGURE 5

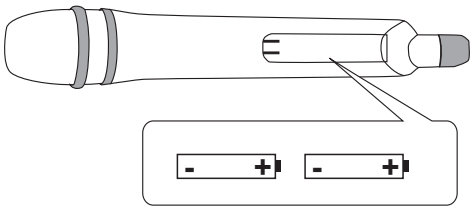

FIGURE 6

3. Insert two 1.5VAA alkaline batteries into the battery compartment as shown in Figure 6.Two fresh 1.5V alkaline batteries should typically provide 8 hours of performance time. Two fully charged 1.2V Nicad batteries (1800 mA) should provide 12 hours of performance time. When the LOW BATTERY light on the transmitter turns on, you have 20 minutes of less of useful battery life remaining. Change the battery at you first opportunity.

IMPORTANT: Carbon-zinc and zinc-chloride will not provide adequate power and are not recommended.

4. Replace the battery cover.

USING THE BODY-PACK TRANSMITTERS

Operating Body-Pack Transmitters

FIGURE 7

NOTE: The body-pack system is designed for use with other equipment,such as lavaliere microphones,guitars,headset microphones, etc.See your dealer for details on ordering the proper equipment for your needs.

1. Clip the body pack transmitter to your belt or guitar strap.
2. Connect the lavaliere microphone,headset or instrument adapter cable to the body-pack transmitter.
3. Turn the transmitter Power switch on and Mute switch OFF. Check Power/Battery fuel gauge.
4. Check the RF Signal Indicator on the receiver to see if the RF signal is being received.
5. Begin speaking or playing your instrument.
6. During the performance or presentation,slide the Mute ON/OFF switch to the ON position when the system is not being used.
7. When the performance or presentation is over,slide the transmitter Mute ON/OFF switch to ON position and Power ON/OFF switch to the OFF position to conserve battery power.

Transmitter Battery Installation

1. Slide the transmitter Power ON/OFF switch to the OFF position .
2. Pull up on the OPEN side of the battery compartment cover, flip it open,as shown in Figure 8.
3. Insert fresh 1.5V AAA alkaline battery into the battery compartment as shown in Figure 8. TWO fully charged 1.2V NiCad battery should provide 8 hours of performance time. When the red LOW BATTERY light on the transmitter glows,you have 20 minutes or less if useful battery life remaining;change the battery at your first opportunity.

IMPORTANT: Carbon-zinc and zinc-chloride batteries will not provide adequate power and are not recommended.

4. Replace the battery cover.

Transmitter audio gain adjustment

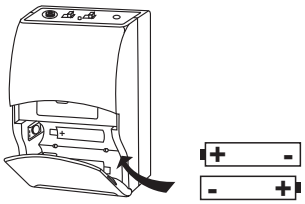

FIGURE 8

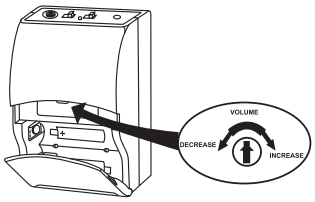

FIGURE 9

The transmitter audio gain control has been factory preset to provide satisfactory output.
To adjust the audio gain,locate the transmitter audio gain control and use the a screwdriver to adjust the control.

- Decrease the audio gain by turning the gain control counter clockwise (while the vocalist is singing or the musical instrument is being played).
- Increase the audio gain by turning the gain control clockwise(while the vocalist is singing or the musical instrument is being played.)

TIPS AND TROUBLESHOOTING

Tips for getting the best performance

- Maintain a line-of-sight between the transmitter and receiver antennas.
- Keep the receiver and antennas away from large metal objects.
- Avoid placing the receiver near computers or other RF generating equipment.
- Point the receiver antennas straight up.
- Avoid placing the receiver in the bottom of an equipment rack unless the antennas are remotely located.

Troubleshooting

Some common problems and their solutions are identified in the table below. If you are unable to solve a problem, contact your dealer.

Problem	Solution
No sound;RF light(S) not glowing.	• Make sure the transmitter POWER switch is ON and the receiver is plugged into a power source. • Check battery. • Check receiver squelch setting. • Check receiver antenna connection(s). • Make sure antennas are in line of sight of transmitter.
No sound;RF lights glowing.	• Turn up receiver audio VOLUME control. • Check for proper connection between receiver and audio mixer unit.
Received signal is noisy or contains extraneous sounds with transmitter on.	• Check battery. • Remove local sources of RF interference. • If using a guitar or other instrument,check connections.Two transmitters may be operating on the same frequency.Locate and turn one off. • Signal may be too weak. Reposition antennas. If possible,move them closer to transmitter.
Noise from receiver with transmitter off.	• Adjust receiver squelch control. • Remove local sources or RF interference. • Reposition receiver or antennas.
Momentary loss of sound as transmitter is moved around performing area.	• Reposition receiver and perform another"walkthrough"test and observe the RF indicators. If audio dropouts persist, mark these"dead spots"in performing area and avoid them during performance.

SPECIFICATIONS AND INFORMATION

Specifications

RF Carrier Frequency Range

902.3-927.7MHz

Working Range

100m(approximately 300ft)under typical conditions.

Audio Frequency Response

20 to 18,000Hz , -3dB.

Audio Output Level(+ -20KHz deviation,1 KHz tone)

1/4-inch connector(into 3k load):-8.8dBV(Hi Z)
XLR connector

RF Sensitivity

-107dB,typical

System Distortion(ref,+15KHz deviation,1KHz modulation)

0.4%.

Power Requirements

Handheld and lavaliere:
Two 1.5V alkaline batteries. Two 1.5V Nicad (rechargeable) are strongly recommended.

Current Drain

Transmitter: 100mA average (120mA max)
Receiver: 100mA average (130mA max)

Operating Temperature Range

-20° to 50℃ (-4° to 122°F).**NOTE:** Battery characteristics may limit this range.