Cambridge Consultants

Technical User Manual

RCOM v3.1 BS & BCM

Client:
Ocado
Buildings One & Two
Mosquito Way
Hatfield Business Park
Hatfield AL10 9UL

Prepared by: Steve Marchlewski, Fraser Edwards, Nick Marley

Date: 19 September 2022

Doc Ref: P4603-UG-001 v0.7

Cambridge Consultants Ltd
Science Park, Milton Road
Cambridge, CB4 0DW
England

Tel: +44(0)1223 420024
Email: info@CambridgeConsultants.com
www.CambridgeConsultants.com

This document is commercially confidential and contains proprietary information of Cambridge Consultants.
© Cambridge Consultants Ltd 2022. All rights reserved.

bsi. ISO 9001 Quality Management ISO 13485 Medical Devices Quality Management
FM 10720 MD 536820

Table of Contents

1 Health & Safety 4
1.1 Introduction 4
1.2 Warnings and Cautions 4
2 Referenced Documents 6
3 Introduction to RCOM v3.1 7
3.1 What is RCOM? 7
3.2 Purpose 7
3.3 General Description of Operation 7
3.4 Approved Usage 7
4 Base Station Installation 9
4.1 Packing List 9
4.2 Mechanical Fixing 10
4.3 Electrical Connection 12
4.4 Communications Connection 12
4.4.1 Electrical Ethernet 12
4.4.2 Optical Ethernet 12
4.4.3 Factory Electrical Ethernet 12
4.5 Timing Sources 13
4.5.1 Synchronisation Using PTP 13
4.5.2 Synchronisation Using 1PPS 13
4.6 Software 15
4.7 LED Lights 15
5 BCM Installation 16
5.1 Packing List 16
5.2 Mechanical Fixing 17
5.3 Electrical Connection 18
5.4 Communications Connections 20
5.5 Software 20
5.6 Remote LED Light 20
6 Commissioning 21
6.1 Base Station Configuration 21
6.2 BCM Configuration 23
7 Technical Operating Parameters 24
7.1 Dynamic Frequency Selection (DFS) & Interference Avoidance (Adaptivity) 25
8 Technical Description 27
9 Maintenance 27
9.1 Software Upgrade 27

© Cambridge Consultants Ltd 2022

9.1.1 Manual Firmware Upgrade 27
9.1.2 Automated Firmware Upgrade 27
10 Disposal 27
11 Glossary 28

© Cambridge Consultants Ltd 2022

1 Health & Safety

1.1 Introduction

The safety precautions provided in this manual are for ensuring safe and correct use of RCOM v3.1 BS and BCM, and for preventing injury to personnel or damage to the equipment.

Warnings, Cautions, Notes and Explanations are provided:

Warning	an instruction which draws attention to the risk of injury or death
Caution	an instruction which draws attention to the risk of damage to the product, process or surroundings
Note	a point of important information which will help the user to carry out a task effectively and efficiently
Explanation	an explanation of why a feature is there or the reason for carrying out a task

1.2 Warnings and Cautions

Warnings

Safe Distance from Base Station and BCM Antennas

Personnel should maintain a distance of at least 20cm from a Base Station or BCM antenna.

FCC Warning Statement

This device complies with Part 15 of the FCC Rules.

Operation is subject to the following two conditions:

1) This device may not cause harmful interference, and
2) This device must accept any interference received, including interference that may cause undesired operation.

This equipment complies with FCC radiation exposure limits set forth for an uncontrolled environment. End users must follow the specific operating instructions for satisfying RF exposure compliance. This transmitter must not be co-located or operating in conjunction with any other antenna or transmitter.

Changes or modifications not expressly approved by the party responsible for compliance could void the user's authority to operate the equipment.

© Cambridge Consultants Ltd 2022

Warnings

Industry Canada Warning Statement

Product Marketing Names

The Product Marketing Name (PMN) of the BS is: “RCOM BS”.

The Product Marketing Name (PMN) of the BCM is: “RCOM BCM”.

Warning Statement

"Under Industry Canada regulations, this radio transmitter may only operate using an antenna of a type and maximum (or lesser) gain approved for the transmitter by Industry Canada.

To reduce potential radio interference to other users, the antenna type and its gain should be so chosen that the equivalent isotropically radiated power (EIRP) is not more than that necessary for successful communication."

"This device complies with Industry Canada licence-exempt RSS standard(s). Operation is subject to the following two conditions:

1) This device may not cause harmful interference, and
2) This device must accept any interference received, including interference that may cause undesired operation."

"Conformément à la réglementation d'Industrie Canada, le présent émetteur radio peut fonctionner avec une antenne d'un type et d'un gain maximal (ou inférieur) approuvé pour l'émetteur par Industrie Canada.

Dans le but de réduire les risques de brouillage radioélectrique à l'intention des autres utilisateurs, il faut choisir le type d'antenne et son gain de sorte que la puissance isotrope rayonnée équivalente (p.i.r.e.) ne dépasse pas l'intensité nécessaire à l'établissement d'une communication satisfaisante."

"Le présent appareil est conforme aux CNR d'Industrie Canada applicables aux appareils radio exempts de licence. L'exploitation est autorisée aux deux conditions suivantes:

1) l'appareil ne doit pas produire de brouillage, et
2) l'utilisateur de l'appareil doit accepter tout brouillage radioélectrique subi, même si le brouillage est susceptible d'en compromettre le fonctionnement."

Antennas

This radio transmitter (identify the device by certification number) has been approved by Industry Canada to operate with the antenna types listed below with the maximum permissible gain indicated. Antenna types not included in this list, having a gain greater than the maximum gain indicated for that type, are strictly prohibited for use with this device.

Approved Antennas

BS

The antenna type approved for use with the transmitter is a Ubiquiti AirMax Dual Polarisation, 16 dBi, 120° sector antenna, (Supplier ref: AM-5G16-120).

BCM

The antenna type approved for use with the transmitter is a Flat Type 5.1-5.8 GHz Dipole 5 dBi Antenna for SMA Plug RP, (Supplier Ref: DA-5158-11-SMR).

© Cambridge Consultants Ltd 2022

Cautions

Preventing Electrostatic Discharge Damage

Electrostatic discharge (ESD) damage can occur when electronic components are improperly handled and can result in complete or intermittent equipment failures.

Guidelines for preventing ESD damage:

- Always use an ESD wrist or ankle strap and ensure that it makes good skin contact
- Specifically avoid direct hand contact with the centre conductor(s) of any of the connectors.
- Avoid contact between external connectors and clothing. The wrist or ankle strap only protects components from ESD voltages on the body; ESD voltages on clothing can still cause damage.
- Never attempt to remove the printed circuit board from the case.

2 Referenced Documents

Reference	Title	Issued by
Reference 1.	System Architecture Specification: RCOM v3.1	Cambridge Consultants

Table 1 Referenced Documents

© Cambridge Consultants Ltd 2022

3 Introduction to RCOM v3.1

3.1 What is RCOM?

The Rainbow Communications System (RCOM) is a point to multipoint short range, radio communications system which operates in the frequency bands 5150 to 5350 and 5470 to 5725MHz.

The overall system comprises both wired and wireless communications.

The wireless part comprised two units, the Base Station (BS) and the Bot Control Module (BCM) which form the two radio parts of the point to multipoint system. One BS can be connected to many BCMs at any one time.

The wired parts comprise of (Figure 1):

- An Ethernet LAN that connects the controlling system to the Base Station;
  when multiple Base Stations are used this is done via a Base Station Controller (BSC)
- The connection from the BCM to a PC on the device being controlled, again over Ethernet.

3.2 Purpose

The purpose of the radio system is to provide a low data rate, bi-directional, wireless connection to many mobile factory machineries which transport goods, in a controlled manner, around the facility.
These machineries are unmanned; the purpose of the wireless connection is to issue commands to the machineries and relay status information back, from each of the machineries, to a central point in the factory.

3.3 General Description of Operation

The radio system is arranged as a number of fixed BSs each of which is operating in a star formation connecting to a large number of BCMs. The BCMs can be moving slowly and can have a maximum range of up to 150 m.

Multiple BSs may be used in the same vicinity and these use a Base Station Controller (BSC) to coordinate operation. The BSC is responsible for routing system configuration and reporting data between the factory network and the BSs. Command and reporting data is routed directly from 'the DASH' via the factory network to the BCMs via the serving BS. The DASH originates control commands to the BCMs and accepts position information from the BCMs.

This is shown in Figure 1.

There is no BCM dynamic handover from a BS in the blue cell to the BS in the red cell however 'break-before-make' roaming is possible.

3.4 Approved Usage

- RCOM is designed for operation in the UK, EU, USA, Canada and Japan
- RCOM is provisioned for a specific country due to geographically different regulations
- RCOM must only be used indoors
- RCOM is only to provide bi-directional wireless connections to machineries in the factory
- The BCM must not be carried by a human operator
- The BS must be stationary

Please also refer to the Warnings and Cautions in section 1.2.

© Cambridge Consultants Ltd 2022

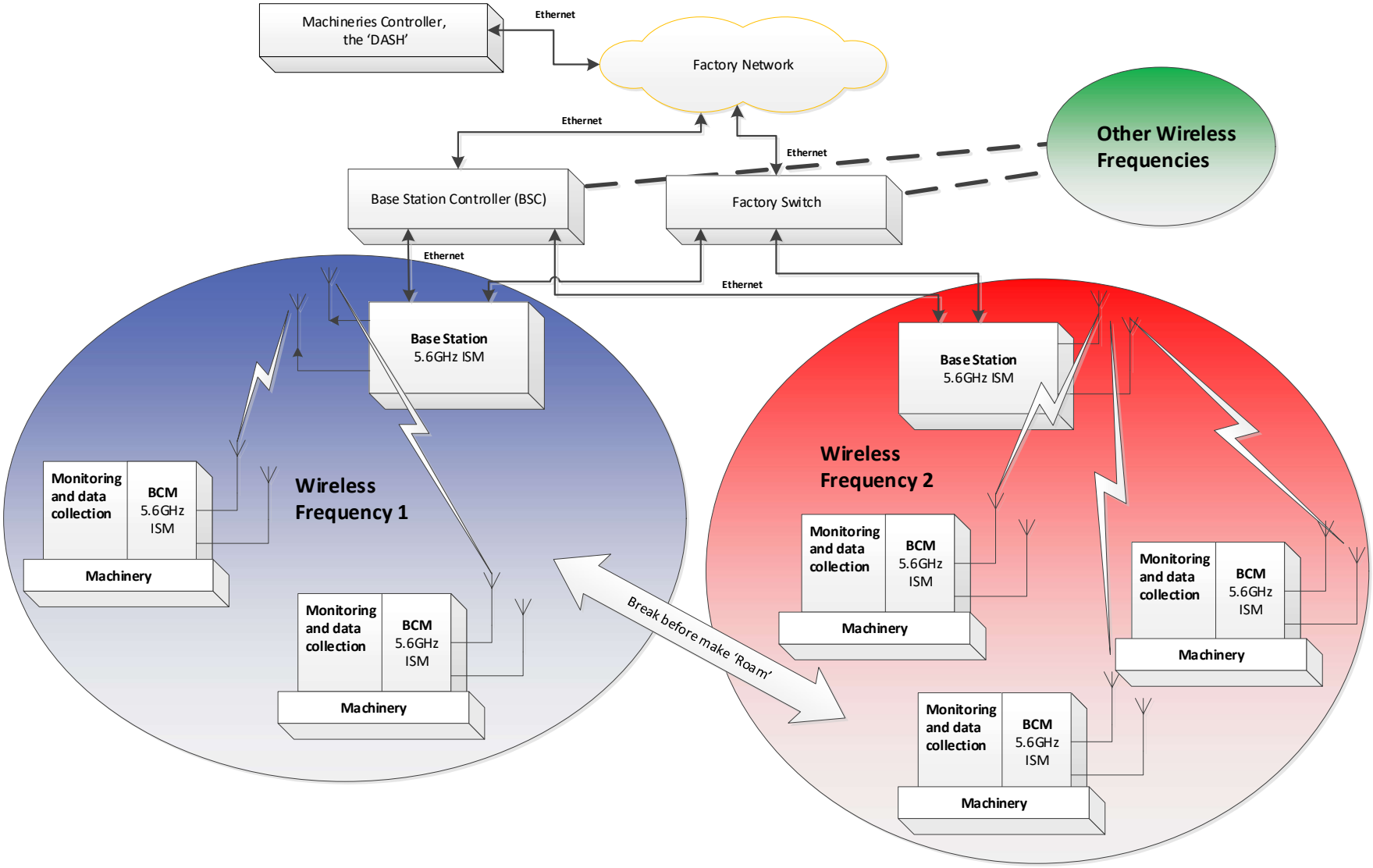

Figure 1
System Structure

© Cambridge Consultants Ltd 2022

4 Base Station Installation

4.1 Packing List

Item	Description	Quantity
1	Base Station	1
2	Base Station Antenna AM-5G16-120: Ubiquiti AirMax Dual Polarisation, 16 dBi, 120° sector	2
3	Base Station to Antenna cables 1m long, Microtek low loss RG58 cable, reverse polarity SMA plugs	2
4 (Not shown)	Base Station Mounting Screws M6 x 12 Cap Head Screw	4

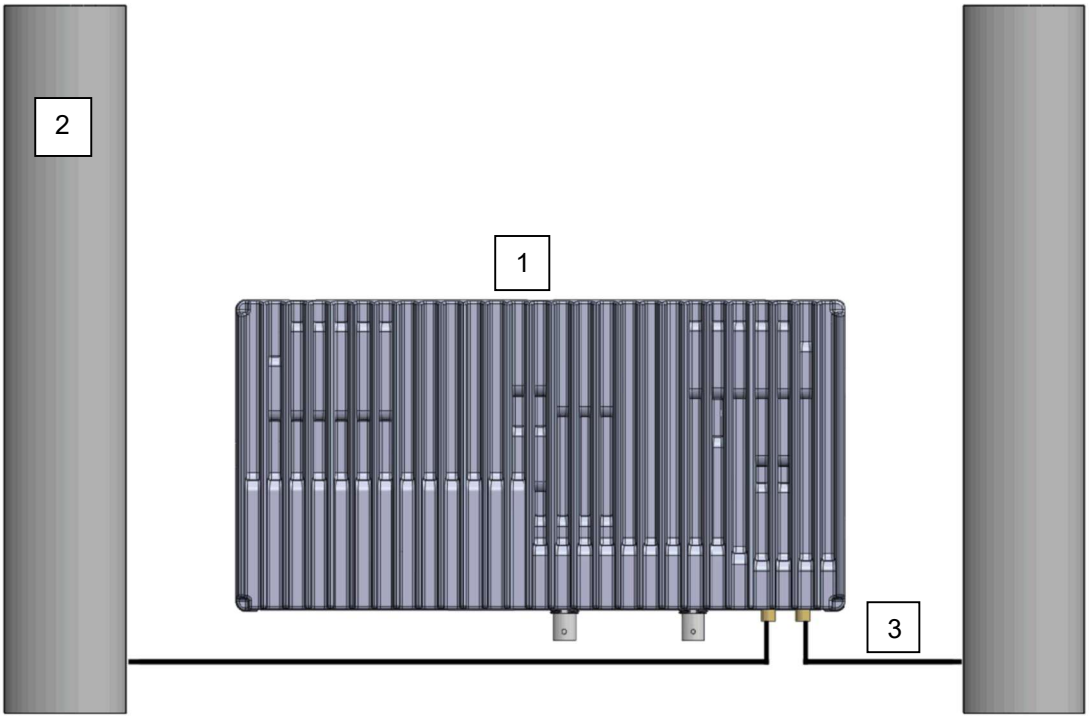

Figure 2 Base Station and Antennas

Also required are several installation dependent items:

- Mounting bracket for the Base Station
- Mounting brackets for the Antennas if the ones provided are unsuitable for your installation
- Power cables (2 off if redundancy is required)
- Ethernet cables (optical or electrical or both if desired, 2 off if redundancy is required)
- 1PPS timing signal cable (optional; sync can be done over Ethernet instead)

Additional details of the cables required are listed in the appropriate sections below.

© Cambridge Consultants Ltd 2022

4.2 Mechanical Fixing

1. Find a Suitable Location

Note the Base Station size and weight (Section 7).

The Base Station and its Antennas take up no more than 1 m by 780 mm.

The Base Station should be mounted at least 0.2 m above the level of the BCMs.

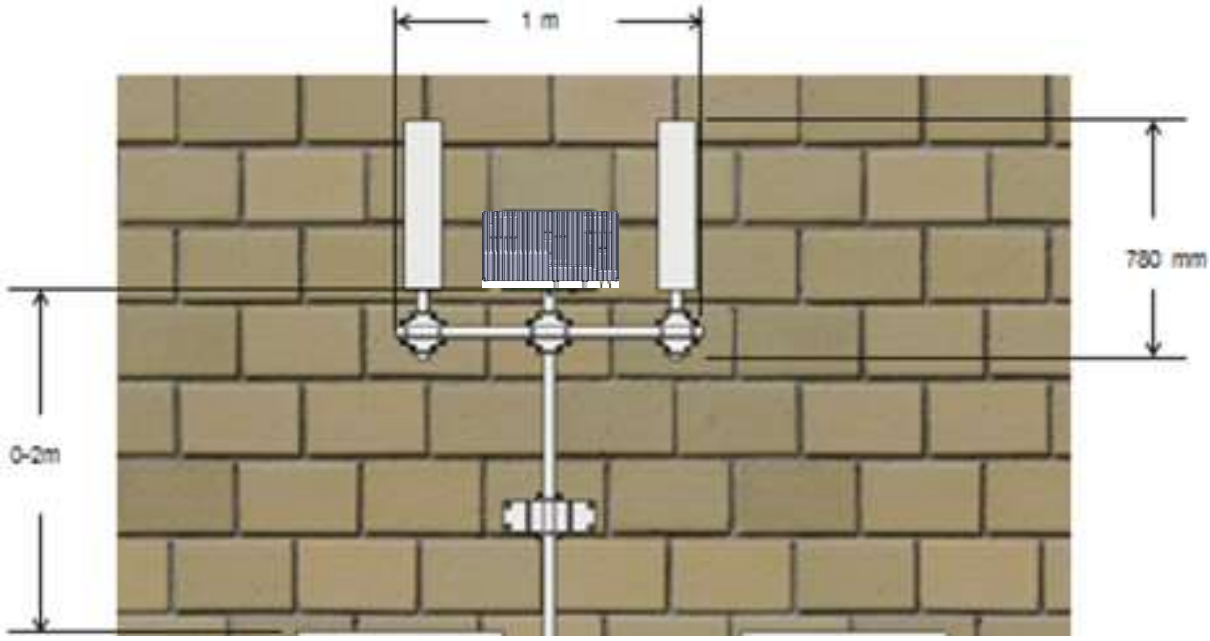

Figure 3 Base Station Mounting

Base Station must be mounted with at least 20 cm separation from any factory operatives.

Install the Base Station so that the externally accessible connectors point downwards.

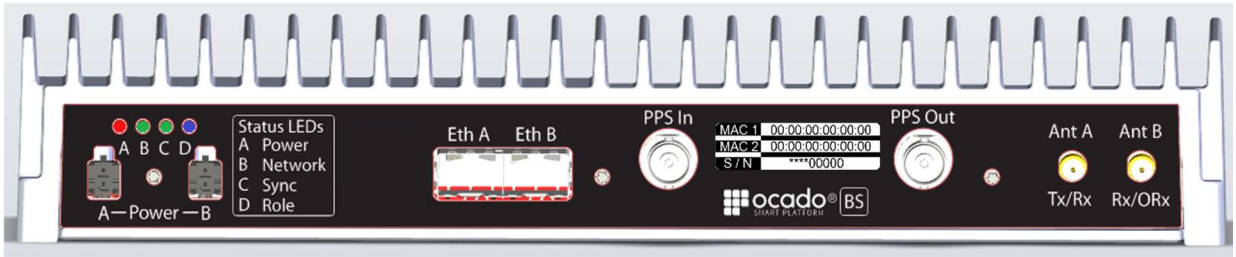

Figure 4 Base Station Connectors

This is to protect the Base Station connectors from condensation.

© Cambridge Consultants Ltd 2022

2. Mount the Base Station

Use a suitable bracket for this installation.

Scaffolding poles are appropriate.

3. Mount the Antennas

Mount Antennas 0.5 m to 1 m apart, at the same height and clear of the BS, e.g. Figure 3.

Base Station Antennas should not be directly obstructed by building infrastructure.

4. Cable the Antennas

Use the cables supplied.

Use strain relief on the cables so that their weight is not taken directly on the connectors.

If condensation may be a problem, ensure the cables loop down so any moisture drips off an insulated part of the cable and not into the Antenna or the Base Station.

The Antenna has two connectors which provide for both vertical and horizontal polarisation. The cables should be attached to the connector marked for vertical polarization.

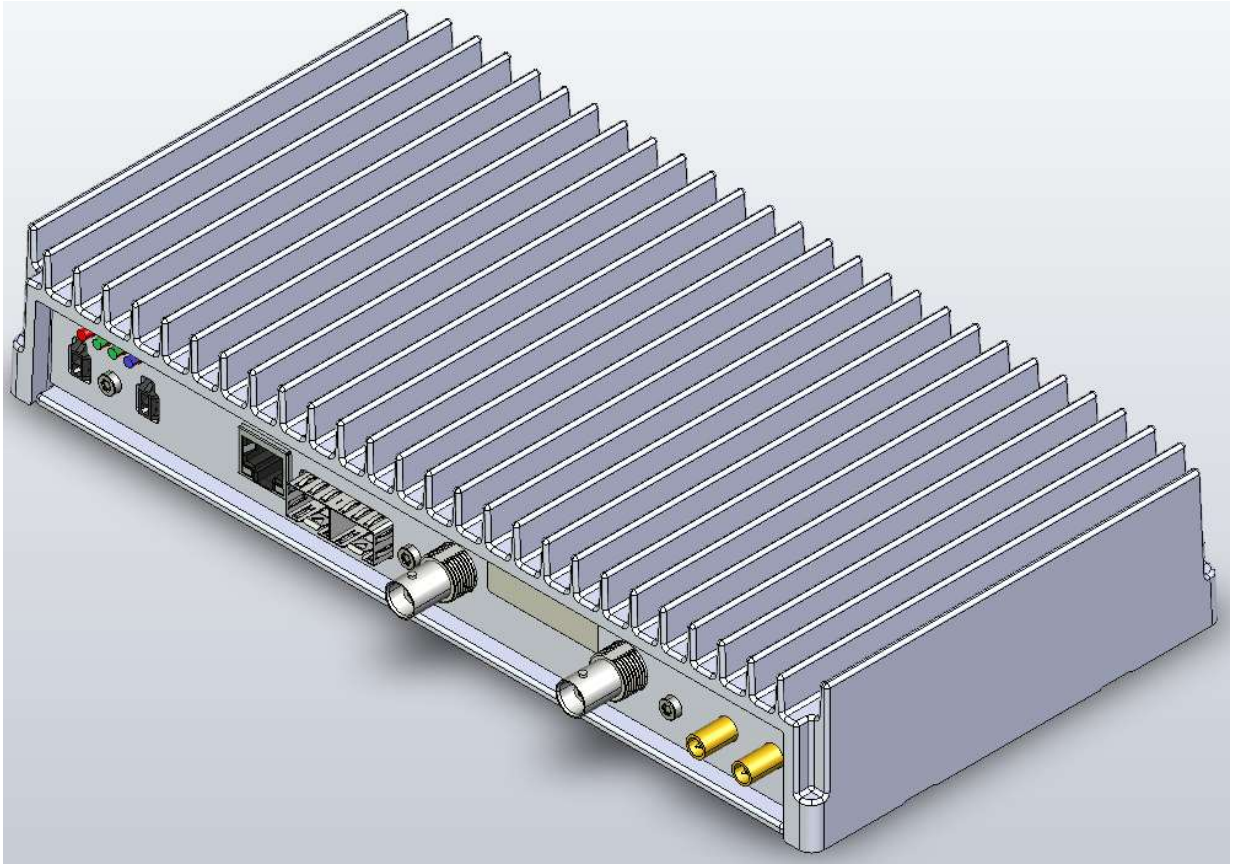

Figure 5 Base Station

© Cambridge Consultants Ltd 2022

4.3 Electrical Connection

The Base Station has two redundant, independent, electrically isolated power sources.

Voltage	24 VDC ±10%
Current	Less than 1.5 A (total for both power inputs)

Table 2 BS Power Supply Ratings

The power supply used needs to be current limited to supply less than 100W when connected to any load.

1. Make Suitable Power Cables

Power cables are not supplied as the length of the cable required is installation dependent.

The power cables must be less than 3m long, unscreened and 20-24AWG, e.g. Belden 8205.

Base Station power connectors: Molex Micro-Fit 3.0 43025-0200 2-Way connectors.

Base Station power connector pin out: Pin 1 = Positive, Pin 2 = Negative.

2. Connect BS Power Cables

See Figure 4 for the location of the Base Station power connectors.

Base Stations will work with only one power supply, but redundancy is recommended.

4.4 Communications Connection

The Base Station is connected to a central control system via Ethernet. This 1 Gb Ethernet connection can be electrical or optical via a dual cage SFP (Small Form-factor Pluggable) connector. Juniper (or compatible) SFP modules can be purchased that provide either fibre or copper connections.

Two Ethernet ports are provided for redundancy.
The Base Station will operate if only one is connected but redundancy is recommended.

Plug in the chosen SFP module(s) and connect the appropriate length and type of cables to the Base Station Ethernet connector, see Figure 4 for the location of these connectors.

4.4.1 Electrical Ethernet

Example suitable electrical SFP module:
FS SFP-GB-GE-T: Juniper QFX-SFP-1GE-T Compatible 1000BASE-T SFP Copper RJ-45 100m Transceiver Module.

Use Cat 5 screened Ethernet cable.

4.4.2 Optical Ethernet

Example suitable optical SFP module:
FS SFP1G-LX-31: Juniper QFX-SFP-1GE-LX Compatible 1000BASE-LX SFP 1310nm 10km DOM Transceiver Module.

4.4.3 Factory Electrical Ethernet

The Base Station has a fixed electrical Ethernet RJ45 connection that is blanked-off and **not used in operation**. This interface is only used during factory test.

© Cambridge Consultants Ltd 2022

4.5 Timing Sources

It is important that the air-interface signals are aligned between all the Base Stations operating in a system.

The three requirements for synchronisation are:

- an accurate frequency reference,
- precise phase alignment to within about 1 microsecond, and
- time-of-day to within a few milliseconds.

To achieve these phase and frequency requirements, PTP and 1PPS options are available.

For Base Station wall-clock (present in log-file timestamps etc) the network infrastructure must provide an NTP server. This timing source is not used to provide time-of-day for the air-interface which uses either PTP time-of-day or, when in 1PPS mode, a time-of-day derived from NMEA strings received from a server within the network infrastructure. In 1PPS mode, the location of the NMEA string server is set via the device configuration file (see section 6 below):

- nmea_server = nmea-server.warehouse-13.co.uk

To correctly handle updates to the leap-seconds schedule, a leap-leap seconds file (in the format of https://www.ietf.org/timezones/data/leap-seconds.list) must be provided to the Base Station. This file may be pre-installed on a device but in order to be updated correctly as leap-seconds are announced, a server should be located within the infrastructure. In all cases, the location of the leap-seconds file on the device and the source of the file within the infrastructure are set via the device configuration file (see section 6 below):

- leap_seconds_file = /mnt/configuration-data/rcom/leap-seconds.list
- leap_seconds_server = testrig-internal:8081

4.5.1 Synchronisation Using PTP

The Base Station supports IEEE 1588v2 PTP (Precision Time Protocol) messages – the local clock generators can use PTP messages received over either of the Ethernet ports to allow multiple Base Stations to operate with locked air-interface timing.

The network infrastructure must provide at least one PTP timing Master.

Intermediate network switches must support PTP.

Edit the device configuration file (see section 6 below) to select PTP and then identify the network host(s) of the PTP Master(s):

- sync_mode = 1588ptp
- ptp_addrlist[1] = PTP-HOSTNAME-B
- ptp_addrlist[0] = PTP-HOSTNAME-A

4.5.2 Synchronisation Using 1PPS

For smaller systems, an independent 1PPS (one pulse per second) connection can be used.

© Cambridge Consultants Ltd 2022

The 1PPS generator used should pick up its signal from the GPS system.

There are many commercially available 1PPS generators.
Example suitable 1PPS generator: Brandywine NFS-220+

The Base Station physical 1PPS interface are two TE Connectivity 1-1634612-0 BNC connectors (1PPS In and 1PPS Out). PPS In is an isolated input with 50 Ω impedance, logic high minimum = 2.6 V, maximum = 5 V. PPS Out is a 5 V logic signal designed to drive a 50 Ω load.

The 1PPS timing source should be connected to the Base Station PPS In connector.

© Cambridge Consultants Ltd 2022

4.5.2.1 Multiple Base Stations

Normally, the 1PPS timing source should be fanned out to multiple Base Stations via distribution amplifiers in a star or tree configuration. However, the Base Station PPS Out connector allows a second Base Station to be synchronised to the first, e.g. in a situation where the first is free-running and acting as the timing master.

A daisy chain of multiple Base Stations is not recommended, as each will take a few minutes from start-up to generate a stable output, and the chain would be sensitive to a point failure.

By editing the device configuration file (see section 6 below) select 1PPS mode, and optionally compensate at each Base Station for delays via different length cables from the 1PPS source (values in nanoseconds):

- sync_mode = 1pps
- cable_delay_1pps = 0
- global_cable_delay_1pps = 0

4.6 Software

The Base Station software is loaded at power on from on-board eMMC memory.

Base Station software version can be found in the /etc/os-release.txt file on the Base Station.
Significant state information is summarised in the file at /tmp/bsinfo.txt.
Continuous logging information is presented in files placed in the /var/log/rainbow directory.

All Base Stations in a system **MUST** be running the same version of software.

4.7 LED Lights

The Base Station has several LEDs that indicate activity on the unit, the power and status indicator LEDs are together in a 4-way LED block and Ethernet LEDs are part of the relevant SFP. The Ethernet LEDs operate in the same way, irrespective of whether an electrical or optical network connection is active.

Colour	Label	Purpose	On	Flashing	Off
Red	Power	Power Supply Readiness	Power Supply Ready	On interface has failed since boot	
Green	Network	Network Connectivity	Two interfaces active	One interface active	
Green	Synch	Timing Synchronisation	Synched	Synching	Not Synched
Blue	Role	Base Station Role	Active	Standby	Not Active
Green	Ethernet SFP	Link Speed	1 Gbps Link	Activity	No Link (both off)
Yellow	Ethernet SFP		10 or 100 Mbps Link	Activity	

Table 3 BS LEDs

© Cambridge Consultants Ltd 2022

5 BCM Installation

5.1 Packing List

Item	Description	Quantity
1	BCM	1
2	BCM Antenna Brackets (optional)	2
3	BCM Antenna Flat Type 5.1-5.8GHz Dipole 5dBi Antenna for SMA Plug RP (Part Number: DA-5158-11-SMR)	2
4	BCM to Antenna cable (length 1) 0.3m long, Microtek low loss RG58 cable, reverse polarity SMA plugs	1
5	BCM to Antenna cable (length 2) 0.65m long, Microtek low loss RG58 cable, reverse polarity SMA plugs	1

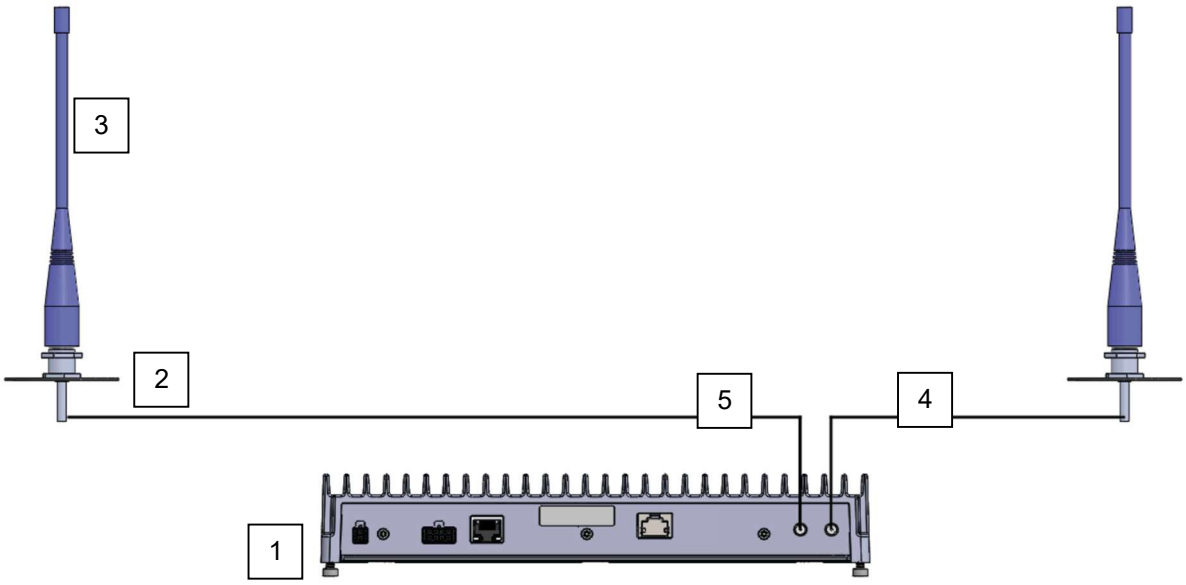

Figure 6 BCM and Antennas

Also required are several installation dependent items:

- Screws/bolts for attaching the BCM to the mobile device
  Locking nuts/washers should be used to avoid loosening due to vibration
- Power cable
- LED / 1PPS cable for connecting the remotely mounted BCM Power LED and PPS Out

Use of the BCM PPS Out is optional.

- Ethernet cable for connecting the BCM to the BOT-PC
- SPI cable for connecting the BCM to the BOT RTC

© Cambridge Consultants Ltd 2022

5.2 Mechanical Fixing

1. Mount the BCM

Note the BCM size and weight (Section 7).

The BCM is designed to be connected to a mobile device (BOT) which contains a PC with an Ethernet interface and a control unit (RTC) with an SPI interface.

The mobile device provides power to the BCM hence the mounting location of the BCM should take this interconnection into consideration.

The BCM mounts inside the BOT using a mounting plate.
Fixing should allow for any vibration, e.g. using locking washers or nuts.

Install the BCM so that the externally accessible connectors point downwards.

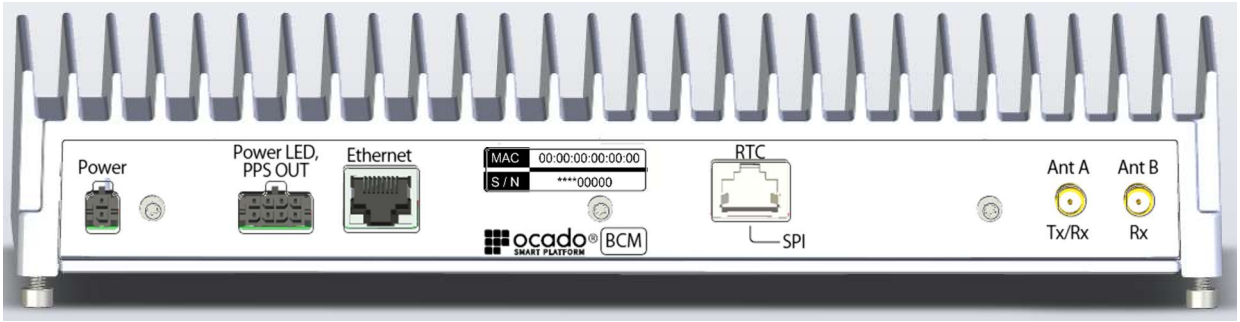

Figure 7 BCM Connectors

This is to protect the Base Station connectors from condensation.

2. Mount the Antennas

The antennas should be mounted vertically onto bulkhead connectors through a plate on the mobile device, at least 0.5 m apart from each other so that they are above the Vehicle body and pointing towards the ceiling.

The antennas must be mounted to avoid metallic obstructions close to the antenna.

The bulkhead connector is part of the cable assembly which is used to connect the antenna to the BCM antenna connector.

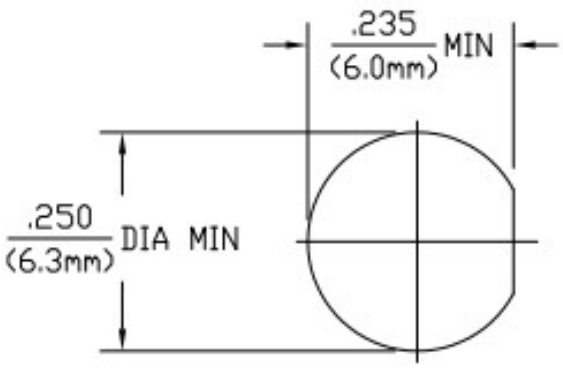

© Cambridge Consultants Ltd 2022

3. Cable the Antennas

Use the cables supplied.

Use strain relief on the cables so that their weight is not taken directly on the connectors.

If condensation may be a problem, ensure the cables loop down so any moisture will drop off an insulated part of the cable and not into the Antenna or the BCM.

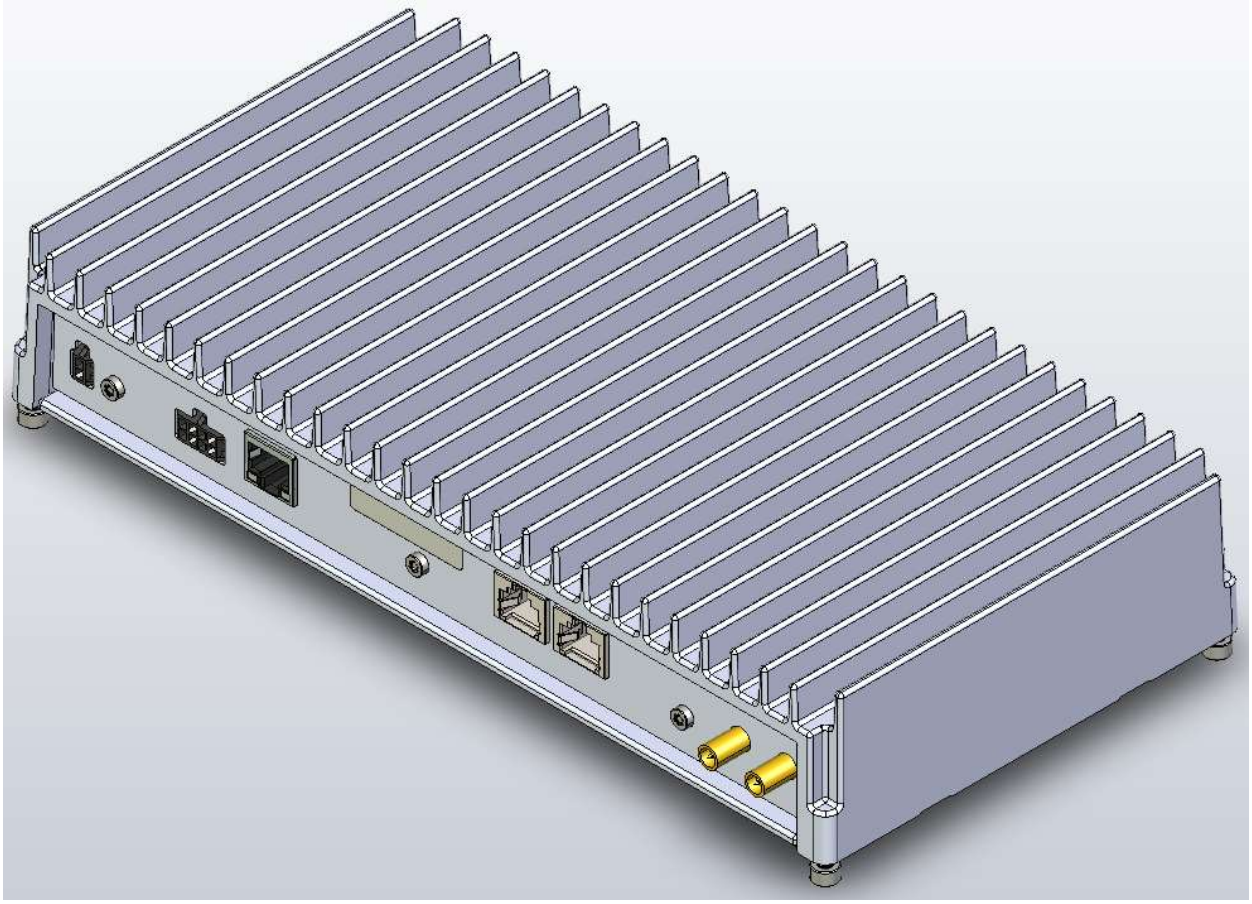

Figure 8 BCM

5.3 Electrical Connection

The BCM power input needs to be provided with:

Voltage	24 VDC ±10%
Current	Less than 1.5 A

Table 4 BCM Power Supply Ratings

The power supply used needs to be current limited to supply less than 100W when connected to any load.

© Cambridge Consultants Ltd 2022

1. The power Connect the BCM Power Cable

The power cable must be less than 3m long, unscreened and 20-24AWG, e.g. Belden 8205.

BCM power connector: Molex Micro-Fit 3.0 43025-0200 2-Way connector.

BCM power connector pin out: Pin 1 = +VBat, Pin 2 = -VBat.

See Figure 7 for the location of the BCM power connector.

2. Connect the BCM Power LED / PPS Out Cable(s)

The Power LED / PPS Out cable(s) must be less than 3m long, unscreened.

BCM Power LED / PPS Out connector: Molex Micro-Fit 3.0 43025-0800 8-Way connector.

Pin	Signal	Function
1	BOT_PPS1-	Negative signal of BOT_PPS1
2	0 V	
3	BOT_PPS0-	Negative signal of BOT_PPS0
4	0 V	
5	BOT_PPS1+	Positive signal of BOT_PPS1
6	0 V	
7	BOT_PPS0+	Positive signal of BOT_PPS0
8	LED_REMOTE	Remote Power LED Drive

Table 5 BCM Power LED / PPS Connector Pin Out

See Figure 7 for the location of the BCM Power LED / PPS Out connector.

LED_REMOTE provides 20 mA through a typical 2.1 V_F LED placed between LED_REMOTE and 0 V.

© Cambridge Consultants Ltd 2022

5.4 Communications Connections

The Ethernet port on the BCM, for use when the BCM is docked, must be connected to the BOT-PC using screened Cat 5 Ethernet cable and is a standard RJ45 connector (Würth Elektronik 7499110122).

The RTC SPI port on the BCM must be connected to the BOT-RTC using screened Cat 5 cable, less than 3m long and is an 8P8C connector (model Kycon GLX-S-99M).

Pin	Name	Function
1	MOSI+	Data output from RCOM Radio Module, positive wire
2	MOSI-	Data output from RCOM Radio Module, negative wire
3	SCLK+	Data clock from RCOM Radio Module, positive wire
4	CSn+	Inverted Chip Select from RCOM Radio Module, positive wire
5	CSn-	Inverted Chip Select from RCOM Radio Module, negative wire
6	SCLK-	Data clock from RCOM Radio Module, negative wire
7	MISO+	Data input to RCOM Radio Module, positive wire
8	MISO-	Data input to RCOM Radio Module, negative wire
Case	0 V	Ground

Table 6 BCM RTC SPI Connector Pin Out

The RTC SPI port is designed to take a screened RJ45 plug on the cable from the BOT-RTC.

See Figure 7 for the position of these connectors on the BCM.

5.5 Software

The BCM software is loaded from the mobile device PC at power up.

BCM software version can be found in the /etc/os-release.txt file on the BCM.
Significant state information is summarised in the file at /tmp/bcminfo.txt.
Continuous logging information is presented in files placed in the /var/log/rainbow directory.

5.6 Remote LED Light

The BCM has no lights on the unit itself, but a single remote Power LED connected via the Power LED / PPS connector (see Table 5) to indicate power on the unit. This is to allow the position of this light to be visible in whichever BOT the BCM is fitted.

LED	Purpose	On
LED_REMOTE	Power Supply Readiness	Power Supply Ready

© Cambridge Consultants Ltd 2022

6 Commissioning

The BS file allows you to allocate the frequency that the BS should use, and the BCM file allows you to associate your mobile devices via their BCMs to each BS.

The BS and BCM configuration file is found at /mnt/configuration-data/rcom/rcom-link.cfg[1].

Sections 6.1 and 6.2 describe configuration file contents for standalone operation, refer to the GitLab documentation for a complete description of the possible options.

However, in both cases, in a system that includes a BSC most of the configuration details will be supplied from the BSC over the wired network, and the only local configuration needed is the identity of that BSC.

To edit a configuration file, log into the BS/BCM using SSH. The IP address or host name of the BS/BCM, login credentials, and a Linux or Windows PC connected to the network are required.

The credentials required vary depending on the security level associated with the installed firmware. For insecure firmware this may be simply the root password. For secured firmware, a key signed by an authorised user with access to the relevant CA (certificate authority) may be required.

If using a Linux PC, log into the BS/BCM using:

```
ssh root@<ip address>
```

If using a Windows PC, use a terminal program such as PuTTY to SSH into the BS/BCM using:

```
root@<ip address>
```

From this shell session, the configuration file can be edited with a text editor, e.g. “vi” on the BS/BCM:

```
vi /opt/rainbow/rcom/etc/rcom-link.cfg
```

6.1 Base Station Configuration

An example Base Station configuration file for standalone operation is shown below:

```
[bs]
state = Active
ptp_addrlist[1] = PTP-HOSTNAME-B
ptp_addrlist[0] = PTP-HOSTNAME-A
global_cable_delay_1pps = 0
sync_mode = Freerun
bsid = 12345
traffic_hostname = 172.18.24.38
next_channel = 2,Whitelisted
channel = 22,Whitelisted
thin_pipe_mode = Single
max_num_fat_pipes = 4
bot[0x00000d80] = 00:02:00,172.18.24.44

[private]
startup_mode = Standalone
bsc = bsc
```

The parameters that you may wish to configure are described below.

[1] In versions of RCOM before rcom-v3, this file was located at /opt/rainbow/rcom/etc/rcom-link.cfg

© Cambridge Consultants Ltd 2022

[bs]

state	Indicates if this (physical) BS is to run as the active node in a group making up a (logical) BS
	A logical group of BSs are used when you want to have one or more spare BSs in standby ready to take over from the active BS in case of a fault; this is known as **failover**
	Defaults to 'standby' to ensure the radio is not started until the BSC (or user) brings the BS online by setting state = Active
ptpaddrlist[0] **...** **ptpaddrlist[3]**	The PTP server addresses if used – when the "sync_mode" value is set to "1588ptp" The Base Station PTP client receives streams from these and chooses the one most stable Up to 4 may be specified e.g. ptpaddrlist[0] = 172.18.24.163, ptpaddrlist[1] = 172.18.24.164
sync_mode	Indicates how the BS is to obtain time-synchronisation with the upstream network equipment
	Options: freerun, 1pps, 1588ptp
bsid	Specifies the BS ID, which is the logical-BS to which this device belongs
channel	The channel this BS is supposed to be using
	⚠ Booting multiple Base Stations without configuring this independently will cause RF interference between devices. The channels equate to the frequency channel to use; 24 channels are available with RCOM. It should be noted that in a stand-alone system the channel number should be carefully selected to comply with the country of operations regulatory requirements.
	Set this to a unique number in your system between 0 and 23

[private]

startup_mode	Indicates if the BS starts ‘standalone’ or ‘managed’
	'Standalone' if a BSC is not being used in which case the BS will not look for a BSC and must be entirely hand-configured using this configuration file
	Default is ‘managed’ which causes the BS to wait for the BSC to configure it before examining further configuration keys
bsc	Hostname/IP-Address of the server responsible for managing this device If the configuration server is running in 'managed' mode (which it is by default) then it periodically attempts to register with the management server for inclusion into the RCOM system, e.g. bsc = 172.18.36.162

⚠ **Additional parameters are contained within the configuration file but should not be edited.**

© Cambridge Consultants Ltd 2022

6.2 BCM Configuration

Example BCM configuration file for stand-alone usage:

```
[bot]
radio = 0x00000017,0:02:0,0

[private]
bsc = 192.168.91.100
rrm_spidev_name = /dev/spidev0.0
```

Significant parameters you may wish to configure are described below.

[bot]

radio	Radio configuration information Sets Base Station ID, TPN (Thin Pipe Number) and channel that the BCM should use: <BSID>,<TPN>,<Channel Number> e.g. radio = 0xFFFFFFFF,_,255
	The BSC sets the TPN when the mobile device is connected (docked) to the system network

[private]

bsc	Hostname / IP Address of server responsible for managing this device
	The BCM periodically attempts to register with the management server for inclusion into the RCOM system and to receive radio configuration, e.g. bsc = bsc
rrm_spidev_name	Name of the Linux device node through which RTC traffic (ICD-020) is routed

Additional parameters are contained within the configuration file but should not be edited.

© Cambridge Consultants Ltd 2022

7 Technical Operating Parameters

	BS		BCM	
Size (Length x Depth x Height)	264 mm x 135 mm x 45 mm			
Weight	1.9 kg			
Operating Temperature	0 ºC to +45 ºC			
Operating Frequency	ETSI, FCC, IC: 5470 MHz to 5725 MHz Japan MIC 5150 to 5350 and 5470 to 5725MHz			
Maximum Rated Power	**20MHz**	**10MHz**	**20MHz**	**10MHz**
Conducted, normal conditions	+8.5 dBm	+5.5 dBm		
Wideband Mode, conducted, normal conditions			+16 dBm	+13 dBm
Narrowband Mode, conducted, normal conditions			0 dBm	0 dBm
Safe distance for Staff from BS and BCM Antennas				
⚠	20 cm			
Range, BS to BCM	150 m			

ℹ The BS runs with a sectored antenna; the 150 m is the maximum distance from the antenna mid-point.

Maximum Number of BCMs per BS	ETSI, FCC, IC: 1800 Japan MIC: 3120

ℹ A single BS will communicate with several hundred low data rate BCMs which will be either static or moving around at a maximum speed of a few meters per second inside the building.

Maximum Number of Frequency Independent Active BSs per Installation	ETSI, FCC, IC: 24 Japan MIC: 20

ℹ More than one BS may be operating simultaneously depending on the size of the installation.

Nominal Channel Bandwidth	ETSI, FCC, IC: 10 MHz Japan MIC: 20 MHz
Channel Centre Frequency	ETSI, FCC, IC: Fc = 5482.5 MHz + N * 10 MHz, N = 0...23 [Not all channels are allowed in all regions] Japan MIC: 5180, 5200, 5220, 5240 5260, 5280, 5300, 5320,5500, 5520, 5540, 5560, 5580, 5600, 5620, 5640, 5660, 5680, 5700 and 5720 MHz
Frame Size	ETSI, FCC, IC: 20 ms Japan MIC: 16ms

© Cambridge Consultants Ltd 2022

	BS	BCM

RCOM uses a Time Division Duplex (TDD) frame to split uplink and downlink connectivity, the uplink sub frame is 10 ms and the downlink sub frame is also 10 ms making a complete frame 20 ms.

The number of frames (uplink+downlink subframes) comprising a multiframe (i.e addressing the entire collection of BCMs) is selectable via the device configuration file.

RCOM uses Frequency Division Multiple Access (FDMA) to divide the RF channel into smaller blocks and Time Division Multiple Access (TDMA) method to further split the time into timeslots.

Each BCM is then allocated two frequency blocks and a timeslot as the physical resource used to support the wireless communication.

Modulation	
Downlink: BS to the BCM	OFDM
Uplink: BCM to BS	OFDMA

The system will carry data only.

Broadcast Channel

The BS transmits a broadcast channel at the start of every frame.
This broadcast channel is received by every BCM and is used for system control messages.
Safety System payload data is also transmitted in the first slot of each frame.

Downlink Data	
Downlink: BS to the BCM	ETSI, FCC, IC: Up to 20 BCMs simultaneously across an occupied bandwidth of 9 MHz Japan MIC: Up to 40 BCMs simultaneously across an occupied bandwidth of 18 MHz

Bidirectional Data	
Narrow Band Mode	Uses an instantaneous 450 kHz of bandwidth per connection and a transmit duty cycle of 0.5% ETSI, FCC, IC: frequency hopping over 9 MHz occupied bandwidth, 1 one hop every 100 ms Japan MIC: frequency hopping over 18 MHz occupied bandwidth, 1 one hop every 96 ms

The narrow band mode carries command and control data for an individual BCM.

In narrow band mode up to 20 devices may be simultaneously in communication in a total occupied bandwidth of 20 x 450 kHz = 9 MHz.

Wide Band Mode	Uses the entire occupied bandwidth of either 9 or 18MHz with a transmit duty cycle of 10%

The wide band mode allows a faster data transfer from a BCM for uploading long term performance data stored on the BCM.

A maximum of 4 (ETSI/FCC) or 6 (JP) BCMs can be allocated the wide band mode at any one time.

7.1 Dynamic Frequency Selection (DFS) & Interference Avoidance (Adaptivity)

RCOM is designed to comply with EN 301 893 which includes the requirement to detect and avoid radar (DFS) and to cease transmission in the presence of other users of the band (Adaptivity).

© Cambridge Consultants Ltd 2022

This functionality in the BS (DFS and Adaptivity) and the BCM (Adaptivity) executes autonomously and there is no facility for the user to change the operating parameters.

The system will monitor for other users in the band and if radar or any other interfering signal is detected the system will change frequency.

© Cambridge Consultants Ltd 2022

8 Technical Description

See Reference 1 for a full technical description of RCOM v3.1.

9 Maintenance

Neither the BS nor the BCM contain user serviceable parts.

9.1 Software Upgrade

The RCOM v3.1 devices support two firmware upgrade methods:

- Local, using a command-line script provided with the firmware, and
- Remote, supported by an external Device Manager.

9.1.1 Manual Firmware Upgrade

Local firmware upgrade is accomplished by copying a firmware distribution (RAUC bundle) to the device using the SCP ('secure copy') command. This requires a user to be in possession of a password or signed key enabling SSH access.

The firmware bundle should be copied for example to the device's /tmp directory:

```
$ scp complete-insecure-bundle-rcom-bcm.raucb root@bot2:/tmp
```

Upgrade is then initiated by executing the system_upgrade script on the device:

```
$ ssh root@bot2
(authenticates with bot2 via signed key or password depending on security)

$ system_upgrade -s -i /tmp/complete-insecure-bundle-rcom-bcm.raucb
```

The system_upgrade command provides help text accessible using the --help command line option:

```
$ system_upgrade --help
```

9.1.2 Automated Firmware Upgrade

RCOM v3.1 devices include integrated support for automated firmware update via a Device Manger, for example the Eclipse hawkBit Update Server.

Deployment and management of a Device Management server is beyond the scope of this document.

10 Disposal

The BS and BCM should be returned to the manufacturer for disposal at end of life.

© Cambridge Consultants Ltd 2022

11 Glossary

Term	Description
BCM	Bot Control Module, the mobile part of the RCOM communications system
BS	Base Station, the fixed part of the RCOM communications system
BSC	Base Station Controller, used to co-ordinate when multiple Base Stations are used
DASH	Command and control system
FDMA	Frequency Division Multiple Access
ID	Identifier
LAN	Local Area Network
LED	Light Emitting Diode
NTP	Network Time Protocol
OFDM	Orthogonal Frequency Division Multiplexing
OFDMA	Orthogonal Frequency Division Multiple Access
PPS	Pulse Per Second
PTP	Precision Time Protocol
RCOM	Rainbow Communications System
TDD	Time Division Duplex
TDMA	Time Division Multiple Access
TPN	Thin Pipe Number

© Cambridge Consultants Ltd 2022