TCT 通测检测
TESTING CENTRE TECHNOLOGY

TEST REPORT

FCC ID: 2AGK6SEWIFIIPCVW

Product: WiFi IP Camera

Model No.: SE-NA104VW

Additional Model No.: SE-NA134VW, SE-NI102VW, SE-NI132VW, SE-NA204VW, SE-NI202VW

Trade Mark: POWER FORCE™

Report No.: TCT160126E012

Issued Date: Jan. 28, 2016

Issued for:

Shenzhen SecuEasy Electronic Co., Ltd.
7/F, No.2 Building, LongBi Industrial Park, Bantian, Longgang District, Shenzhen, China

Issued By:

Shenzhen Tongce Testing Lab
1F, Leinuo Watch Building, Fuyong Town, Baoan Dist, Shenzhen, China
TEL: +86-755-27673339
FAX: +86-755-27673332

Note: This report shall not be reproduced except in full, without the written approval of Shenzhen Tongce Testing Lab This document may be altered or revised by Shenzhen Tongce Testing Lab personnel only, and shall be noted in the revision section of the document. The test results in the report only apply to the tested sample.

TABLE OF CONTENTS

1. Test Certification 3
2. Test Result Summary 4
3. EUT Description 5
4. Test Methodology 6
4.1. Decision of Final Test Mode 6
4.2. EUT System Operation 6
5. Setup of Equipment under Test 7
5.1. Description of Support Units 7
5.2. Configuration of System Under Test 7
6. Facilities and Accreditations 8
6.1. Facilities 8
6.2. Location 8
6.3. Measurement Uncertainty 8
7. Emission Test 9
7.1. Conducted Emission at Mains Terminals 9
7.2. Radiated Emission 11
8. Photographs of Test Configuration 18
9. Photographs of EUT 19

1. Test Certification

Product:	WiFi IP Camera
Model No.:	SE-NA104VW
Additional Model No.:	SE-NA134VW, SE-NI102VW, SE-NI132VW, SE-NA204VW, SE-NI202VW
Applicant:	Shenzhen SecuEasy Electronic Co., Ltd.
Address:	7/F, No.2 Building, LongBi Industrial Park, Bantian, Longgang District, Shenzhen, China
Manufacturer:	Shenzhen SecuEasy Electronic Co., Ltd.
Address:	7/F, No.2 Building, LongBi Industrial Park, Bantian, Longgang District, Shenzhen, China
Test Voltage:	DC 12 V
Date of Test:	Jan. 26 - Jan. 27, 2016
Applicable Standards:	47 CFR FCC Part 15 Subpart B: 2016 ANSI C63.4: 2014

The above equipment has been tested by Shenzhen Tongce Testing Lab and found compliance with the requirements set forth in the technical standards mentioned above. The results of testing in this report apply only to the product/system, which was tested. Other similar equipment will not necessarily produce the same results due to production tolerance and measurement uncertainties.

Tested By: Derek Cai ***Date:*** ***Jan. 27, 2016***

Derek Cai

Check By: Joe Zhou ***Date:*** ***Jan. 28, 2016***

Joe Zhou

Approved By: Tomsin ***Date:*** ***Jan. 28, 2016***

Tomsin

2. Test Result Summary

Emission		
Test Method	**Item**	**Result**
FCC 47 CFR Part 15 Subpart B	Conducted Emission at Mains Terminals	N/A
	Radiated Emission	Pass

Note:

1. Pass: Test item meets the requirement.
2. Fail: Test item does not meet the requirement.
3. N/A: Test case does not apply to the test object.
4. The test result judgment is decided by the limit of test standard.
5. The information of measurement uncertainty is available upon the customer's request.

3. EUT Description

Product Name:	WiFi IP Camera
Model No.:	SE-NA104VW
Additional Model No.:	SE-NA134VW, SE-NI102VW, SE-NI132VW, SE-NA204VW, SE-NI202VW
Trade Mark:	POWER FORCE™
Operation frequency:	WIFI: 2412~2462MHz
Power Supply:	DC 12V
Remark:	SE-NA104VW is tested model, The others are derivative models, and the models are identical in circuit, PCB layout, only differ in the appearance and model names, So the test data of SE-NA104VW can represent the remaining model.

4. Test Methodology

4.1. Decision of Final Test Mode

The EUT was tested together with the thereinafter additional components, and a configuration, which produced the worst emission levels, was selected and recorded in this report.
The following test mode(s) were assessed:

Test Mode
Mode 1: WIFI idle + Lan link + Camera on

4.2. EUT System Operation

1. Set up EUT with the support equipments.
2. Make sure the EUT work normally during the test.

5. Setup of Equipment under Test

5.1. Description of Support Units

The EUT has been tested as an independent unit together with other necessary accessories or support units. The following support units or accessories were used to form a representative test configuration during the tests.

Equipment	Model No.	Serial No.	FCC ID	Trade Name
Notebook Computer	G485	LB00402300	/	Lenovo

Note:

1. All the equipment/cables were placed in the worst-case configuration to maximize the emission during the test.
2. Grounding was established in accordance with the manufacturer's requirements and conditions for the intended use.

5.2. Configuration of System Under Test

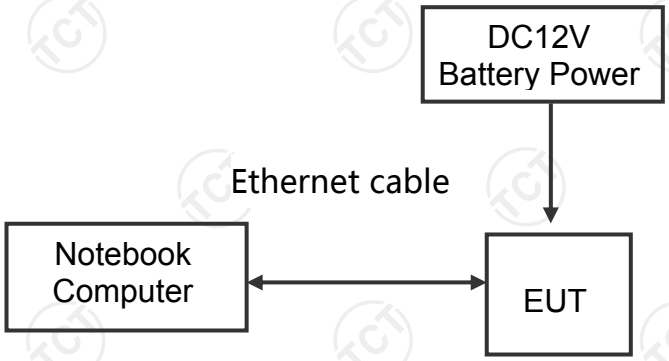

(EUT: WiFi IP Camera)

6. Facilities and Accreditations

6.1. Facilities

The test facility is recognized, certified, or accredited by the following organizations:

● FCC - Registration No.: 572331

Shenzhen Tongce Testing Lab

The 3m Semi-anechoic chamber has been registered and fully described in a report with the (FCC) Federal Communications Commission. The acceptance letter from the FCC is maintained in our files.

● IC - Registration No.: 10668A-1

The 3m Semi-anechoic chamber of Shenzhen TCT Testing Technology Co., Ltd. has been registered by Certification and Engineering Bureau of Industry Canada for radio equipment testing

● CNAS - Registration No.: CNAS L6165

Shenzhen TCT Testing Technology Co., Ltd. is accredited to ISO/IEC 17025:2005 General Requirements for the Competence of Testing and Calibration laboratories for the competence of testing. The Registration No. is CNAS L6165.

6.2. Location

Shenzhen Tongce Testing Lab
Address: 1F, Leinuo Watch Building, Fuyong Town, Baoan Dist, Shenzhen, China
Tel: 86-755-36638142

6.3. Measurement Uncertainty

The reported uncertainty of measurement y ± U, where expended uncertainty U is based on a standard uncertainty multiplied by a coverage factor of k=2, providing a level of confidence of approximately 95 %.

No.	Item	MU
1	Conducted Emission	±2.56dB
2	RF power, conducted	±0.12dB
3	Spurious emissions, conducted	±0.11dB
4	All emissions, radiated(<1G)	±3.92dB
5	All emissions, radiated(>1G)	±4.28dB
6	Temperature	±0.1°C
7	Humidity	±1.0%

7. Emission Test

7.1. Conducted Emission at Mains Terminals

7.1.1. Test Specification

Test Requirement:	FCC 47 CFR Part 15 Subpart B
Test Method:	ANSI C63.4:2014
Frequency Range:	150 kHz to 30 MHz

7.1.2. Limits

Frequency (MHz)	Class A dB(uV)		Class B dB(uV)	
	Quasi-peak	Average	Quasi-peak	Average
0.15 - 0.5	79	66	66 – 56[a]	56 – 46[a]
0.50 - 5.0	73	60	56	46
5.0 - 30.0	73	60	60	50

a) Decreases with the logarithm of the frequency

7.1.3. Test Instruments

Conducted Emission Shielding Room Test Site (843)				
Equipment	**Manufacturer**	**Model**	**Serial Number**	**Calibration Due**
EMI Test Receiver	R&S	ESCS30	100139	Sep. 11, 2016
LISN	Schwarzbeck	NSLK 8126	8126453	Sep. 16, 2016
LISN	AFJ	LS16C	16010947251	Sep. 11, 2016
Coax cable	TCT	CE-05	N/A	Sep. 11, 2016

Note: The calibration interval of the above test instruments is 12 months and the calibrations are traceable to international system unit (SI).

7.1.4. Test Method

The AMN was placed 0.8 m from the boundary of the unit under test and bonded to a ground reference plane. This distance was between the closest points of the AMN and the EUT. All other units of the EUT and associated equipment was at least 0.8 m from the AMN. All power was connected to the system through Artificial Mains Network (AMN). Conducted voltage measurements on mains lines were made at the output of the AMN

7.1.5. Block Diagram of Test Setup

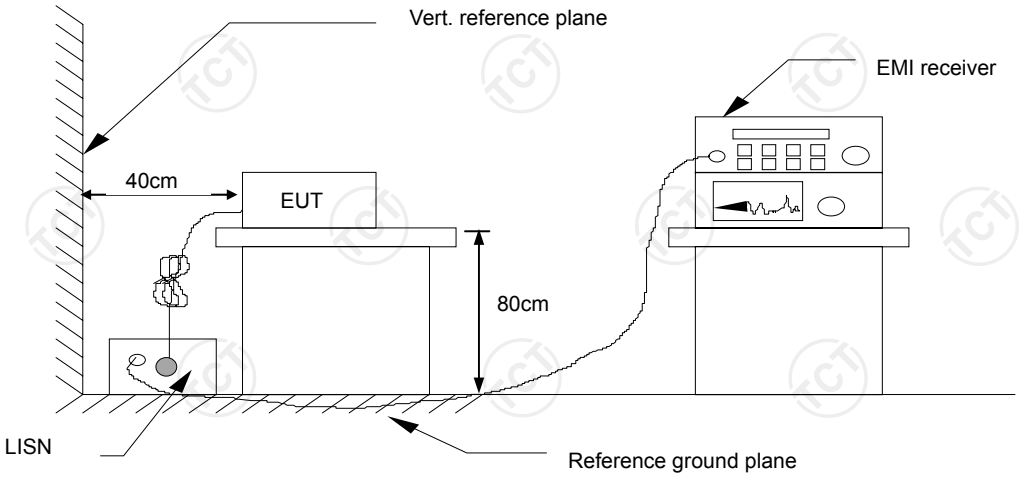

For the actual test configuration, please refer to the related item – Photographs of the Test Configuration.

7.1.6. Test Results

Test Environment:	Temp.:	23 ℃	Humid.:	54 %	Press.:	96 kPa
Test Mode:	N/A					
Test Voltage:	N/A					
Test Result:	N/A					
Remark:	The EUT powered by DC 12V, so this test item is not applicable.					

Note:
L1 = Live Line / N = Neutral Line
"---" denotes the emission level was or more than 2dB below the Average limit, so no re-check anymore.
Freq. = Emission frequency in MHz
Reading level dB(μV) = Receiver reading
Corr. Factor (dB) = Attenuator factor + Cable loss
Level dB(μV) = Reading level dB(μV) + Corr. Factor (dB)
Limit dB(μV) = Limit stated in standard
Margin (dB) = Level dB(μV) – Limits dB(μV)
Q.P. =Quasi-Peak
AVG=Average

7.2. Radiated Emission

7.2.1. Test Specification

Test Requirement:	FCC 47 CFR Part 15 Subpart B
Test Method:	ANSI C63.4:2014
Frequency Range:	30 MHz to 6000 MHz
Measurement Distance:	3 m
Antenna Polarization:	Horizontal & Vertical

7.2.2. Limits

Frequency (MHz)	Class A dB(uV)		Class B dB(uV)	
	Quasi-peak	Average	Quasi-peak	Average
0.15 - 0.5	79	66	66 – 56[a]	56 – 46[a]
0.50 - 5.0	73	60	56	46
5.0 - 30.0	73	60	60	50
Above 1GHz	74 (Peak) 54 (Average)			
a) Decreases with the logarithm of the frequency				

Note:
1. The lower limit shall apply at the transition frequencies.
2. Emission level dB(μV/m) = 20 log Emission level (μV/m).

7.2.3. Test Instruments

Radiated Emission Test Site (966)				
Name of Equipment	**Manufacturer**	**Model**	**Serial Number**	**Calibration Due**
EMI Test Receiver	R&S	ESVD	100008	Sep. 11, 2016
Spectrum Analyzer	R&S	FSEM	848597-001	Sep. 11, 2016
Amplifier	HP	8447D	2727A05017	Sep. 11, 2016
Amplifier	EM	EM30265	07032613	Sep. 11, 2016
Broadband Antenna	Schwarzbeck	VULB9163	340	Sep. 13, 2016
Horn Antenna	Schwarzbeck	BBHA 9120D	631	Sep. 13, 2016
Antenna Mater	CCS	CC-A-4M	N/A	Sep.15 , 2015

Coax cable	TCT	RE-low-01	N/A	Sep. 11, 2016
Coax cable	TCT	RE-high-02	N/A	Sep. 11, 2016
Coax cable	TCT	RE-low-03	N/A	Sep. 11, 2016
Coax cable	TCT	RE-high-04	N/A	Sep. 11, 2016

Note: The calibration interval of the above test instruments is 12 months and the calibrations are traceable to international system unit (SI).

7.2.4. Test Method

Measurements were made in a 3-meter semi-anechoic chamber or Open Area Test Site that complies to CISPR 16. Preliminary (peak) measurements were performed at an antenna to EUT separation distance of 3 meter. The EUT was rotated 360° about its azimuth with the receive antenna located at various heights in horizontal and vertical polarities. Final measurements (quasi-peak) were then performed by rotating the EUT 360° and adjusting the receive antenna height from 1 to 4 m. All frequencies were investigated in both horizontal and vertical antenna polarity, where applicable. Block Diagram of Test Setup.

7.2.5. Block Diagram of Test Setup

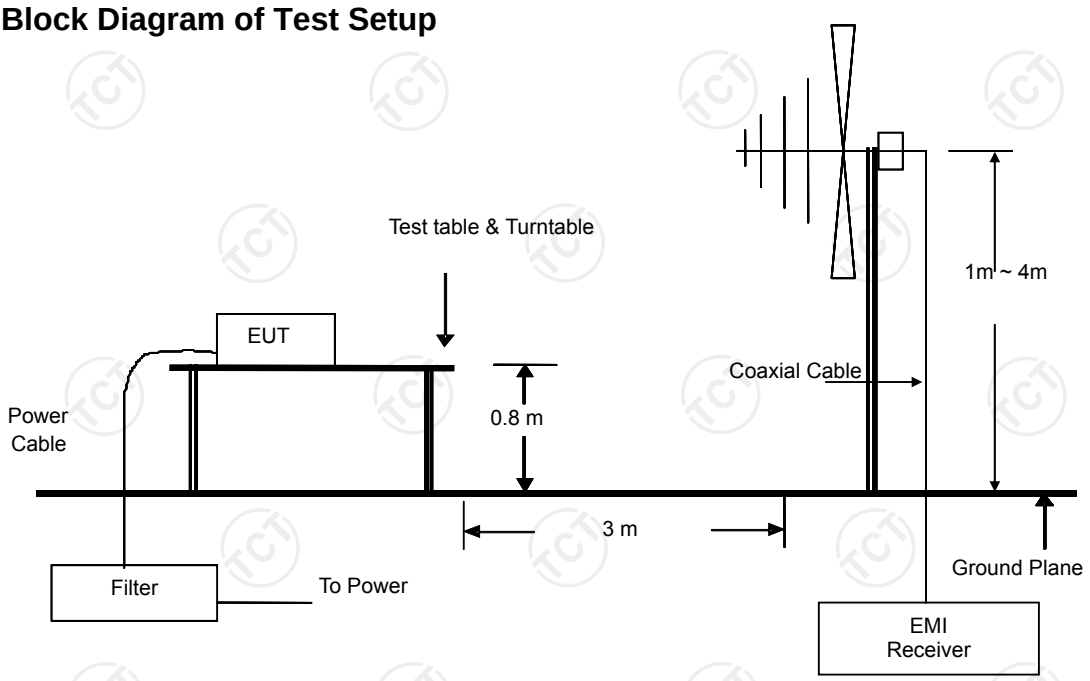

(30MHz to 1GHz)

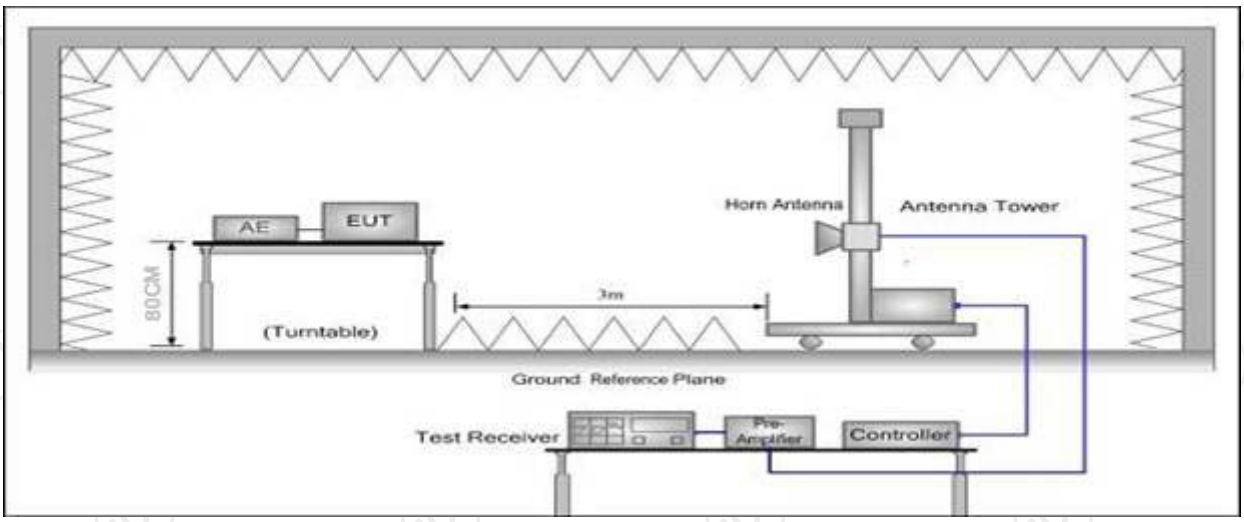

(Above 1GHz)

For the actual test configuration, please refer to the related item – Photographs of the Test Configuration

7.2.6. Test Results

Test Environment:	Temp.:	25 ℃	Humid.:	56 %	Press.:	96 kPa
Test Mode:	Mode 1					
Test Voltage:	DC 12V					
Test Result:	Pass					

Note:

Freq. = Emission frequency in MHz
Reading level dB(μV) = Receiver reading
Corr. Factor (dB) = Antenna factor + Cable loss
Measurement dB(μV/m) = Reading level dB(μV) + Corr. Factor (dB)
Limit dB(μV/m) = Limit stated in standard
Margin (dB) = Measurement dB(μV/m) – Limits dB(μV/m)
Q.P. =Quasi-Peak

Please refer to following diagram for individual

30MHz-1GHz

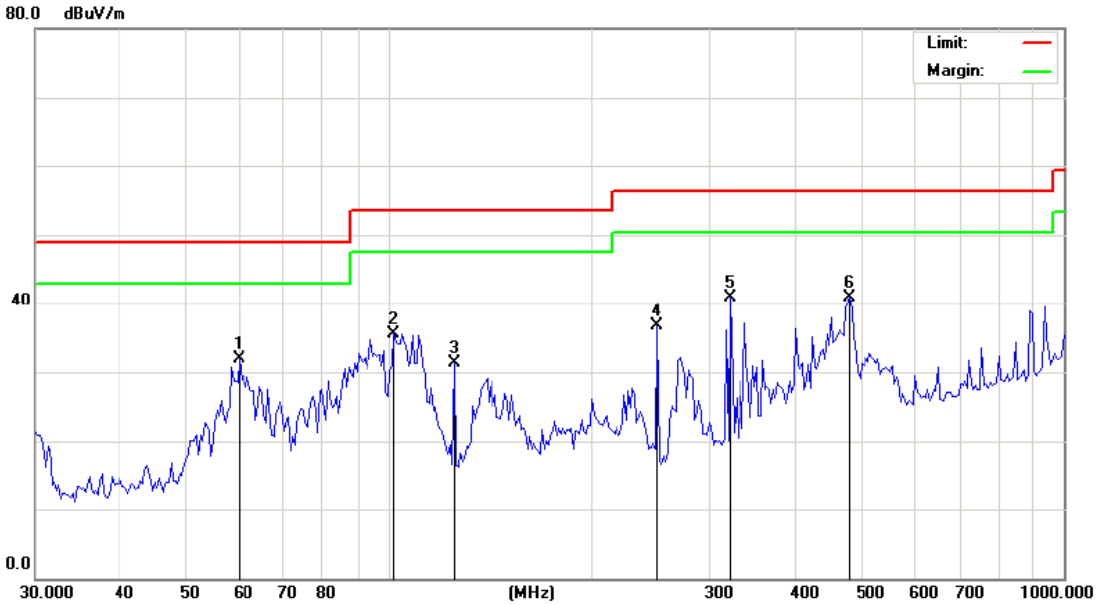

Site | Polarization: ***Horizontal*** | Temperature: 23

Limit: FCC Part 15B Class A RE_3 m | Power: DC 12V | Humidity: 54 %

No.	Mk.	Freq.	Reading Level	Correct Factor	Measure-ment	Limit	Over		Antenna Height	Table Degree	
		MHz	dBuV	dB	dBuV/m	dBuV/m	dB	Detector	cm	degree	Comment
1		60.1528	44.78	-12.87	31.91	49.00	-17.09	peak		0	
2		101.8932	47.13	-11.53	35.60	53.50	-17.90	peak		0	
3		124.9250	45.56	-14.33	31.23	53.50	-22.27	peak		0	
4		250.4860	46.72	-9.94	36.78	56.40	-19.62	peak		0	
5	*	320.3306	48.83	-7.83	41.00	56.40	-15.40	peak		0	
6		481.5112	44.56	-3.56	41.00	56.40	-15.40	peak		0	

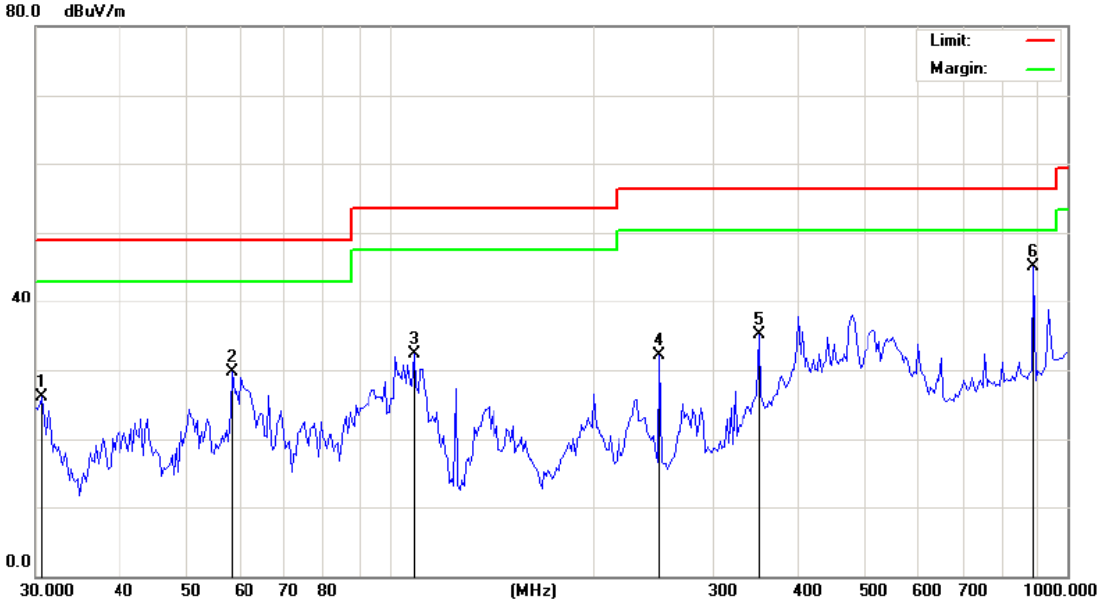

Site | Polarization: ***Vertical*** | Temperature: 23

Limit: FCC Part 15B Class A RE_3 m | Power: DC 12V | Humidity: 54 %

No.	Mk.	Freq.	Reading Level	Correct Factor	Measure-ment	Limit	Over		Antenna Height	Table Degree	
		MHz	dBuV	dB	dBuV/m	dBuV/m	dB	Detector	cm	degree	Comment
1		30.6391	39.69	-13.64	26.05	49.00	-22.95	peak		0	
2		58.4855	42.32	-12.69	29.63	49.00	-19.37	peak		0	
3		108.5455	44.30	-11.91	32.39	53.50	-21.11	peak		0	
4		250.4858	41.97	-9.94	32.03	56.40	-24.37	peak		0	
5		350.9721	42.39	-7.20	35.19	56.40	-21.21	peak		0	
6	*	893.6557	42.49	2.60	45.09	56.40	-11.31	peak		0	

1GHz-6GHz

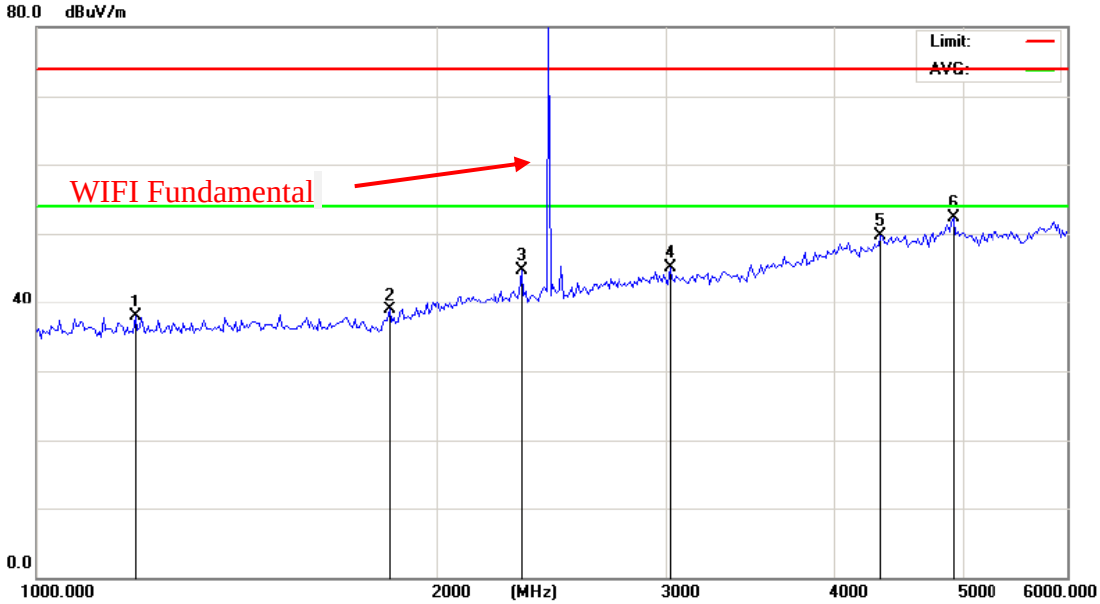

Site | Polarization: ***Horizontal*** | Temperature: 23

Limit: FCC PART 15C PK | Power: DC 12V | Humidity: 54 %

No.	Mk.	Freq.	Reading Level	Correct Factor	Measure-ment	Limit	Over		Antenna Height	Table Degree	
		MHz	dBuV	dB	dBuV/m	dBuV/m	dB	Detector	cm	degree	Comment
1		1188.098	50.76	-12.95	37.81	74.00	-36.19	peak		0	
2		1847.826	51.23	-12.25	38.98	74.00	-35.02	peak		0	
3		2325.220	53.19	-8.58	44.61	74.00	-29.39	peak		0	
4		3011.219	51.26	-6.17	45.09	74.00	-28.91	peak		0	
5		4343.135	51.04	-1.28	49.76	74.00	-24.24	peak		0	
6	*	4924.737	51.17	1.18	52.35	74.00	-21.65	peak		0	

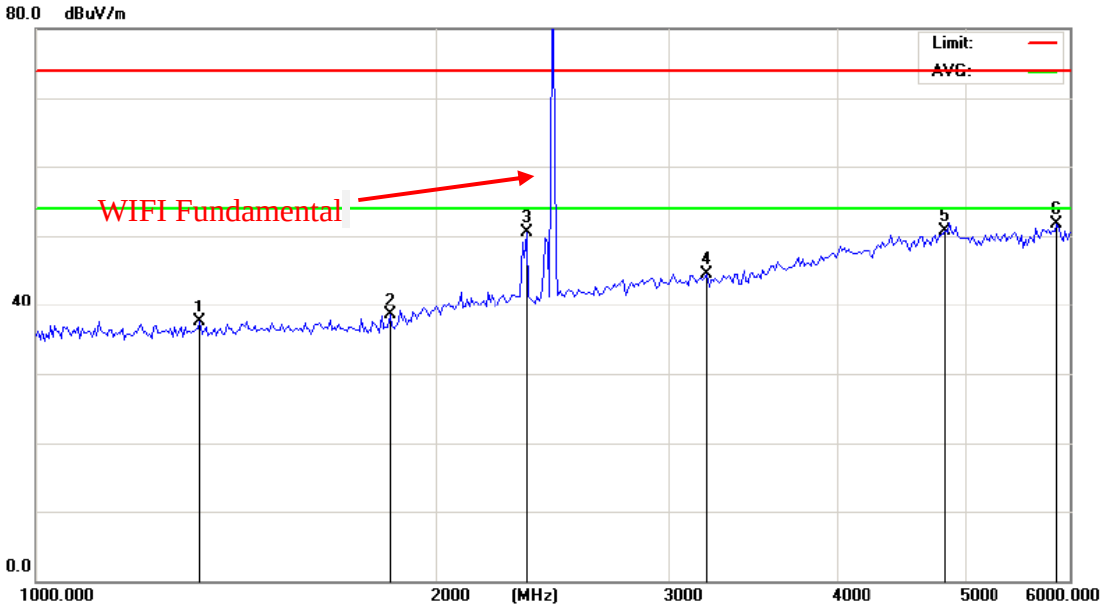

Site	Polarization: ***Vertical***	Temperature:	23
Limit: FCC PART 15C PK	Power: DC 12V	Humidity:	54 %

No.	Mk.	Freq.	Reading Level	Correct Factor	Measure-ment	Limit	Over		Antenna Height	Table Degree	
		MHz	dBuV	dB	dBuV/m	dBuV/m	dB	Detector	cm	degree	Comment
1		1327.988	50.16	-12.69	37.47	74.00	-36.53	peak		0	
2		1847.826	50.79	-12.25	38.54	74.00	-35.46	peak		0	
3		2341.978	59.01	-8.51	50.50	74.00	-23.50	peak		0	
4		3200.756	50.30	-5.77	44.53	74.00	-29.47	peak		0	
5		4837.110	49.82	0.80	50.62	74.00	-23.38	peak		0	
6	*	5872.117	47.86	3.77	51.63	74.00	-22.37	peak		0	

8. Photographs of Test Configuration

Radiated Emission

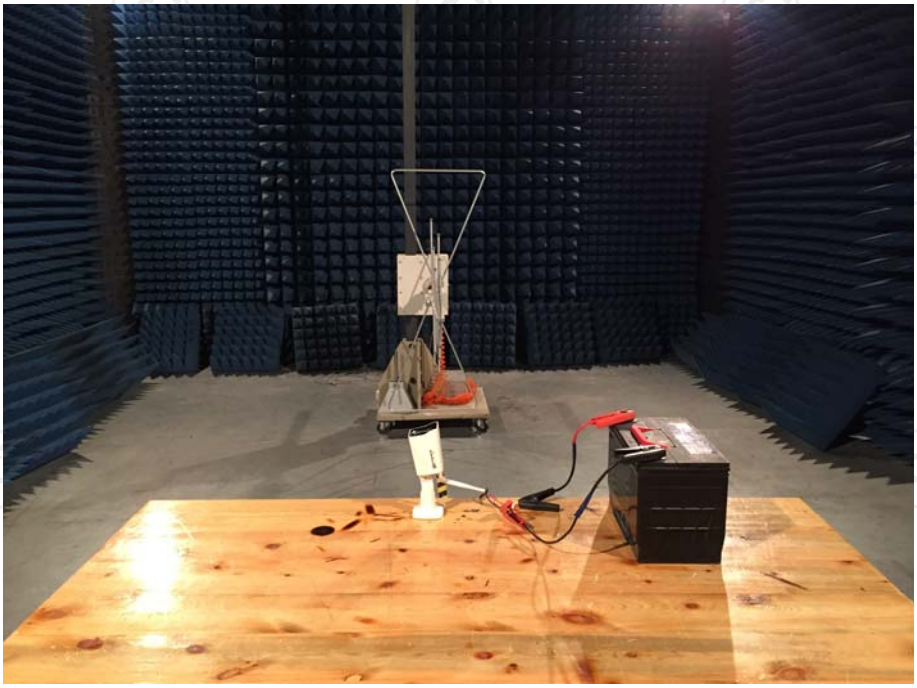

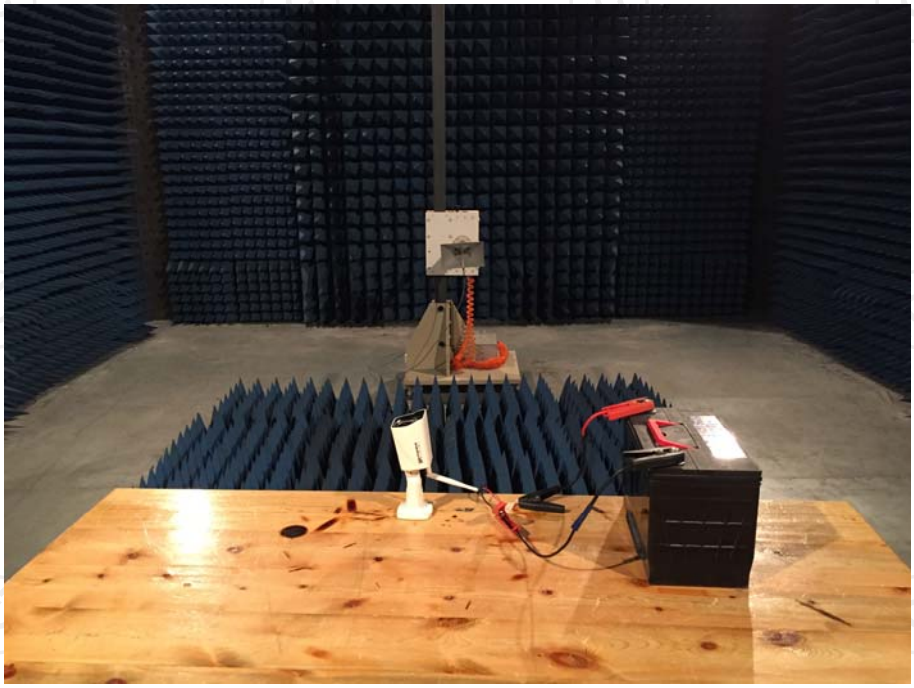

9. Photographs of EUT

Reference to the test report No. TCT160126E011

********END OF REPORT********