CTC Laboratories, Inc.

2/F., Building 1 and 1-2/F., Building 2, Jiaquan Building, Guanlan High-Tech Park, Longhua District, Shenzhen, Guangdong, China

Tel: +86-755-27521059 Fax: +86-755-27521011 Http://www.sz-ctc.org.cn

TEST REPORT

Report No. .....:	**CTC20231800E04-R1**
FCC ID.....:	**2AGKB-KM2PLUS-D**
Applicant .....:	**Videostrong Technology Co.,Ltd**
Address.....:	604, Lushi industrial Building, 28 District, Bao'an District,Shenzhen, China
Manufacturer.....:	Videostrong Technology Co.,Ltd
Address.....:	604, Lushi industrial Building, 28 District, Bao'an District,Shenzhen, China
Product Name .....:	**Set Top Box**
Trade Mark .....:	MECOOL
Model/Type reference.....:	KM2 PLUS D
Listed Model(s) .....:	KM2 PLUS DELUXE, Lumia, HP4423, HP4422, HP4426, HP44J, Ooredoo tv, Leap-S4
Standard .....:	**FCC CFR Title 47 Part 15 Subpart E Section 15.407**
Date of receipt of test sample.....:	Oct. 24, 2023
Date of testing.....:	Oct. 27, 2023 ~ Nov. 15, 2023
Date of issue.....:	Dec. 08, 2023
Result.....:	**PASS**

Compiled by: (Printed name+signature)	Lucy Lan	Lucy Lan
Supervised by: (Printed name+signature)	Eric Zhang	Eric Zhang
Approved by: (Printed name+signature)	Totti Zhao	Totti Zhao

Testing Laboratory Name .....:	**CTC Laboratories, Inc.**
Address.....:	2/F., Building 1 and 1-2/F., Building 2, Jiaquan Building, Guanlan High-Tech Park, Longhua District, Shenzhen, Guangdong, China

This test report may be duplicated completely for legal use with the approval of the applicant. It should not be reproduced except in full, without the written approval of our laboratory. The client should not use it to claim product endorsement by CTC. The Test Result in the report only apply to the tested sample. The test report shall be invalid without all the signatures of testing engineers, reviewer and approver. Any objections must be raised to CTC within 15 days since the date when the report is received. It will not be taken into consideration beyond this limit. The test report merely corresponds to the test sample.

Table of Contents Page

1. TEST SUMMARY 3

1.1. TEST STANDARDS 3
1.2. REPORT VERSION 3
1.3. TEST DESCRIPTION 4
1.4. TEST FACILITY 5
1.5. MEASUREMENT UNCERTAINTY 6
1.6. ENVIRONMENTAL CONDITIONS 6

2. GENERAL INFORMATION 7

2.1. CLIENT INFORMATION 7
2.2. GENERAL DESCRIPTION OF EUT 8
2.3. ACCESSORY EQUIPMENT INFORMATION 9
2.4. OPERATION STATE 10
2.5. MEASUREMENT INSTRUMENTS LIST 14

3. TEST ITEM AND RESULTS 15

3.1. CONDUCTED EMISSION 15
3.2. RADIATED EMISSION 18
3.3. BAND EDGE EMISSIONS 108
3.4. BANDWIDTH 358
3.5. PEAK OUTPUT POWER 505
3.6. POWER SPECTRAL DENSITY 513
3.7. FREQUENCY STABILITY 580
3.8. ANTENNA REQUIREMENT 589

1. TEST SUMMARY

1.1. Test Standards

The tests were performed according to following standards:

FCC Rules Part 15.407: for 802.11a/n/ac/ax, the test procedure follows the FCC KDB 789033 D02 General UNII Test Procedures New Rules V02r01.
ANSI C63.10-2013: American National Standard of Procedures for Compliance Testing of Unlicensed Wireless Devices.

1.2. Report Version

Revised No.	Report No.	Date of issue	Description
01	CTC20231800E04	Nov. 30, 2023	Original
02	CTC20231800E04-R1	Dec. 08, 2023	On the basis of the original report CTC20231800E04, Update Factory. The report CTC20231800E04 is invalid.

1.3. Test Description

FCC Part 15 Subpart E (15.407)			
Test Item	**Standard Section**	**Result**	**Test Engineer**
Antenna Requirement	15.203	Pass	Curry
Conducted Emission	15.207	Pass	Curry
Band Edge Emissions	15.407(b)	Pass	Curry
26dB Bandwidth & 99% Bandwidth	15.407(a)	Pass	Curry
6dB Bandwidth (only for UNII-3)	15.407(e)	Pass	Curry
Peak Output Power	15.407(a)	Pass	Curry
Power Spectral Density	15.407(a)	Pass	Curry
Transmitter Radiated Spurious Emission	15.407(b) &15.209	Pass	Curry
Frequency Stability	15.407(g)	Pass	Curry
Dynamic Frequency Selection (DFS)	15.407(h)	Pass	Curry
Automatically Discontinue Transmission	15.407(c)	Pass	Note 3

Note:
1. The measurement uncertainty is not included in the test result.
2. N/A: means this test item is not applicable for this device according to the technology characteristic of device.
3. During no any information transmission, the EUT can automatically discontinue transmission and become standby mode for power saving. the EUT can detect the controlling signal of ACK message transmitting from remote device and verify whether it shall resend or discontinue transmission.
4. Dynamic Frequency Selection (DFS)，please reference to the test report No.: CTC20231800E05-R1.

1.4. Test Facility

Address of the report laboratory

CTC Laboratories, Inc.

Add: 2/F., Building 1 and 1-2/F., Building 2, Jiaquan Building, Guanlan High-Tech Park, Longhua District, Shenzhen, Guangdong, China

Laboratory accreditation

The test facility is recognized, certified, or accredited by the following organizations:

A2LA-Lab Cert. No.: 4340.01

CTC Laboratories, Inc. EMC Laboratory has been accredited by A2LA for technical competence in the field of electrical testing, and proved to be in compliance with ISO/IEC 17025:2017 General Requirements for the Competence of Testing and Calibration Laboratories and any additional program requirements in the identified field of testing.

Industry Canada (Registration No.: 9783A, CAB Identifier: CN0029)

CTC Laboratories, Inc. EMC Laboratory has been registered by Certification and Engineer Bureau of Industry Canada for the performance of with Registration NO.: 9783A on Jan, 2016.

FCC (Registration No.: 951311, Designation Number CN1208)

CTC Laboratories, Inc. EMC Laboratory has been registered and fully described in a report filed with the (FCC) Federal Communications Commission. The acceptance letter from the FCC is maintained in our files. Registration 951311, Aug 26, 2017.

1.5. Measurement Uncertainty

The data and results referenced in this document are true and accurate. The reader is cautioned that there may be errors within the calibration limits of the equipment and facilities. The measurement uncertainty was calculated for all measurements listed in this test report acc. to TR-100028-01 “Electromagnetic compatibility and Radio spectrum Matters (ERM);Uncertainties in the measurement of mobile radio equipment characteristics; Part 1” and TR-100028-02 “Electromagnetic compatibility and Radio spectrum Matters (ERM); Uncertainties in the measurement of mobile radio equipment characteristics; Part 2” and is documented in the CTC Laboratories, Inc. quality system acc. to DIN EN ISO/IEC 17025. Furthermore, component and process variability of devices similar to that tested may result in additional deviation. The manufacturer has the sole responsibility of continued compliance of the device.

Below is the best measurement capability for CTC Laboratories, Inc.

Test Items	Measurement Uncertainty	Notes
Emission Bandwidth	±0.0196%	(1)
Maximum Conduct Output Power	±0.766dB	(1)
Power Spectral Density	±1.22dB	(1)
Band Edge Measurements	±1.328dB	(1)
Unwanted Emissions Measurement	9kHz-1GHz: ±0.746dB 1GHz-26GHz: ±1.328dB	(1)
Frequency Stability	±2.76%	(1)
Conducted Emissions 9kHz~30MHz	±3.08 dB	(1)
Radiated Emissions 30~1000MHz	±4.51 dB	(1)
Radiated Emissions 1~18GHz	±5.84 dB	(1)
Radiated Emissions 18~40GHz	±6.12 dB	(1)

Note (1): This uncertainty represents an expanded uncertainty expressed at approximately the 95% confidence level using a coverage factor of k=2.

1.6. Environmental Conditions

Normal Condition	Temperature	15 °C to 35 °C
	Relative Humidity	20 % to 75 %
	Air Pressure	101 kPa
	Voltage	The normal test voltage for the equipment shall be the nominal voltage for which the equipment was designed.
Extreme Condition	Temperature	Measurements shall be made over the extremes of the operating temperature range as declared by the manufacturer.
	Voltage	Measurements shall be made over the extremes of the operating temperature range as declared by the manufacturer.

Normal Condition	T_N=Normal Temperature	25 °C
Extreme Condition	T_L=Lower Temperature	0 °C
	T_H=Higher Temperature	45 °C

中国国家认证认可监督管理委员会
For anti-fake verification, please visit the official website of Certification and Accreditation Administration of the People’s Republic of China :
http://yz.cnca.cn

2. GENERAL INFORMATION

2.1. Client Information

Applicant:	Videostrong Technology Co.,Ltd
Address:	604, Lushi industrial Building, 28 District, Bao'an District,Shenzhen, China
Manufacturer:	Videostrong Technology Co.,Ltd
Address:	604, Lushi industrial Building, 28 District, Bao'an District,Shenzhen, China
Factory:	SHENZHEN JINGYANG BOCHUANG DIGITAL TECHNOLOGY CO., LTD.
Address:	ROOM 101102, BUILDING H, LICHENG SCIENCE AND TECHNOLOGY INDUSTRIAL PARK, XINHE AVENUE, GONGHE COMMUNITY, SHAJING STREET, BAOAN DISTRICT, SHENZHEN

2.2. General Description of EUT

Product Name:	Set Top Box				
Trade Mark:	MECOOL				
Model/Type reference:	KM2 PLUS D				
Listed Model(s):	KM2 PLUS DELUXE, Lumia, HP4423, HP4422, HP4426, HP44J, Ooredoo tv, Leap-S4				
Model Difference:	All these models are identical in the same PCB, layout and electrical circuit, Different is model number.				
Power supply:	DC12V 1A from AC/DC Adapter				
Adapter Model:	AT-506A-120100JC Input: 100-240V~ 50/60Hz 0.4A Output: 12Vdc/1A 12W				
Hardware Version:	/				
Software Version:	/				
5G Wi-Fi					
Operation Band:	☒U-NII-1	☒U-NII-2A	☒U-NII-2C	☒U-NII-3	
Operation Frequency:	U-NII-1	5150MHz~5250MHz			
	U-NII-2A	5250MHz~5350MHz			
	U-NII-2C	5470MHz~5725MHz			
	U-NII-3	5725MHz~5850MHz			
Support Bandwidth:	802.11a	☒ 20MHz			
	802.11n	☒ 20MHz	☒ 40MHz		
	802.11ac	☒ 20MHz	☒ 40MHz	☒ 80MHz	☐ 160MHz
	802.11ax	☒ 20MHz	☒ 40MHz	☒ 80MHz	☐ 160MHz
Modulation:	802.11a: OFDM (BPSK, QPSK, 16QAM, 64QAM) 802.11n: OFDM (BPSK, QPSK, 16QAM, 64QAM) 802.11ac: OFDM (BPSK, QPSK, 16QAM, 64QAM, 256QAM) 802.11ax: OFDMA (BPSK, QPSK, 16QAM, 64QAM, 256QAM, 1024QAM)				
Antenna Type:	FPC Antenna				
Antenna Gain:	1.7dBi				

2.3. Accessory Equipment Information

Equipment Information			
Name	Model	S/N	Manufacturer
Notebook	ThinkBook 14G3 ACL	MP246QDR	Lenovo
Displayer	EW3270-T	EW3270U	BenQ
Cable Information			
Name	Shielded Type	Ferrite Core	Length
LAN Cable	Without	Without	1.5M
HDMI Cable	Without	Without	1.5M
Test Software Information			
Name	Versions	/	/
SecureCRT	/	/	/

2.4. Operation State

Operation Frequency List: The EUT has been tested under typical operating condition. The Applicant provides communication tools software to control the EUT for staying in continuous transmitting.

Operation Frequency List:

Operating Band	20MHz Bandwidth		40MHz Bandwidth		80MHz Bandwidth	
	Channel	Frequency (MHz)	Channel	Frequency (MHz)	Channel	Frequency (MHz)
U-NII-1	36	5180	38	5190	42	5210
	40	5200				
	44	5220	46	5230		
	48	5240				
U-NII-2A	52	5260	54	5270	58	5290
	56	5280				
	60	5300	62	5310		
	64	5320				
U-NII-2C	100	5500	102	5510	106	5530
	104	5520				
	108	5540	110	5550		
	112	5560				
	116	5580	118	5590		
	120	5600			122	5610
	124	5620	126	5630		
	128	5640				
	132	5660	134	5670		
	136	5680				
	140	5700				
U-NII-3	149	5745	151	5755	155	5775
	153	5765				
	157	5785	159	5795		
	161	5805				
	165	5825				

Test channel is below:

Operating Band	Test Channel	20MHz Bandwidth		40MHz Bandwidth		80MHz Bandwidth	
		Channel	Frequency (MHz)	Channel	Frequency (MHz)	Channel	Frequency (MHz)
U-NII-1	CH_L	36	5180	38	5190	/	/
	CH_M	40	5200	/	/	42	5210
	CH_H	48	5240	46	5230	/	/
U-NII-2A	CH_L	52	5260	54	5270	/	/
	CH_M	56	5280	/	/	58	5290
	CH_H	64	5320	62	5310	/	/
U-NII-2C	CH_L	100	5500	102	5510	106	5530
	CH_M	116	5580	110	5550	/	/
	CH_H	140	5700	134	5670	122	5610
U-NII-3	CH_L	149	5745	151	5755	/	/
	CH_M	157	5785	/	/	155	5775
	CH_H	165	5825	159	5795	/	/

Data Rated:

Preliminary tests were performed in different data rate, and found which the below bit rate is worst case mode, so only show data which it is the worst case mode.

Test Mode	Data Rate (worst mode)
802.11a	6Mbps
802.11n(HT20)/ 802.11n(HT40)	HT-MCS8
802.11ac(VHT20)/ 802.11ac(VHT40)/ 802.11ac(VHT80)	VHT-MCS0
802.11ax(HE20)/ 802.11ax(HE40)/ 802.11ax(HE80)	HE-MCS0

Test Mode:

For RF test items:
The engineering test program was provided and enabled to make EUT continuous transmit.
For AC power line conducted emissions:
The EUT was set to connect with the WLAN AP under large package sizes transmission.
For Radiated spurious emissions test item:
The engineering test program was provided and enabled to make EUT continuous transmit. The EUT in each of three orthogonal axis emissions had been tested, but only the worst case (X axis) data recorded in the report.
For DFS test items:
The EUT has been tested under test mode condition. The Applicant provides software to control the EUT for staying in DFS mode for testing.

RU Configuration:

Operating Mode	Resource Unit	26 Tone (2M)
802.11ax(HE20)	Specific Resource Unit	0
		⋮
		4
		⋮
		8
	Resource Unit	52 Tone (4M)
	Specific Resource Unit	37
		38
		39
		40
	Resource Unit	106 Tone (8M)
	Specific Resource Unit	53
		54
	Resource Unit	242 Tone (20M)
	Specific Resource Unit	61
Operating Mode	Resource Unit	26 Tone (2M)
802.11ax(HE40)	Specific Resource Unit	0
		⋮
		8
		⋮
		17
	Resource Unit	52 Tone (4M)
	Specific Resource Unit	37
		38
		39
		40
		41

		42
		43
		44
	Resource Unit	106 Tone (8M)
	Specific Resource Unit	53
		54
		55
		56
	Resource Unit	242 Tone (20M)
	Specific Resource Unit	61
		62
	Resource Unit	484 Tone (40M)
	Specific Resource Unit	65
Operating Mode	Resource Unit	26 Tone (2M)
802.11ax(HE80)	Specific Resource Unit	0
		⋮
		17
		⋮
		36
	Resource Unit	52 Tone (4M)
	Specific Resource Unit	37
		⋮
		44
		⋮
		52
	Resource Unit	106 Tone (8M)
	Specific Resource Unit	53
		⋮
		56
		⋮
		60
	Resource Unit	242 Tone (20M)
	Specific Resource Unit	61
		62
		63
		64
	Resource Unit	484 Tone (40M)
	Specific Resource Unit	65
		66
	Resource Unit	996 Tone (80M)
	Specific Resource Unit	67

2.5. Measurement Instruments List

RF Test System					
Item	Test Equipment	Manufacturer	Model No.	Serial No.	Calibrated Until
1	MXA Signal Analyzer	Keysight	N9020A	MY52091402	Aug. 22, 2024
2	High and low temperature test chamber	ESPEC	MT3035	/	Mar. 24, 2024
3	USB Wideband Power Sensor	Keysight	U2021XA	MY55130004	Mar. 14, 2024
4	USB Wideband Power Sensor	Keysight	U2021XA	MY55130006	Mar. 14, 2024
5	Test Software	WCS	WCS-WCN	2023.08.04	/

Radiated Emission (3m chamber 3)					
Item	Test Equipment	Manufacturer	Model No.	Serial No.	Calibrated Until
1	Trilog-Broadband Antenna	Schwarzbeck	VULB 9163	01026	Dec. 18, 2024
2	Horn Antenna	Schwarzbeck	BBHA 9120D	9120D-647	Dec. 01, 2024
3	Test Receiver	Keysight	N9038A	MY56400071	Dec. 16, 2023
4	Broadband Amplifier	SCHWARZBECK	BBV9743B	259	Dec. 16, 2023
5	Mirowave Broadband Amplifier	SCHWARZBECK	BBV9718C	111	Dec. 16, 2023
6	3m chamber 3	YIHENG	EE106	/	Aug. 28, 2026
7	Test Software	FARA	EZ-EMC	FA-03A2	/

Conducted Emission					
Item	Test Equipment	Manufacturer	Model No.	Serial No.	Calibrated Until
1	LISN	R&S	ENV216	101112	Dec. 16, 2023
2	LISN	R&S	ENV216	101113	Dec. 16, 2023
3	EMI Test Receiver	R&S	ESCS30	100353	Dec. 16, 2023
4	ISN CAT6	Schwarzbeck	NTFM 8158	CAT6-8158-0046	Dec. 16, 2023
5	ISN CAT5	Schwarzbeck	NTFM 8158	CAT5-8158-0046	Dec. 16, 2023
6	Test Software	R&S	EMC32	6.10.10	/

Note: 1. The Cal. Interval was one year.

2. The Cal. Interval was three years of the antenna.

3. The cable loss has been calculated in test result which connection between each test instruments.

3. TEST ITEM AND RESULTS

3.1. Conducted Emission

Limit

FCC CFR Title 47 Part 15 Subpart C Section 15.207

Frequency (MHz)	Conducted Limit (dBμV)	
	Quasi-peak	Average
0.15 - 0.5	66 to 56 *	56 to 46 *
0.5 - 5	56	46
5 - 30	60	50

* Decreases with the logarithm of the frequency.

Test Configuration

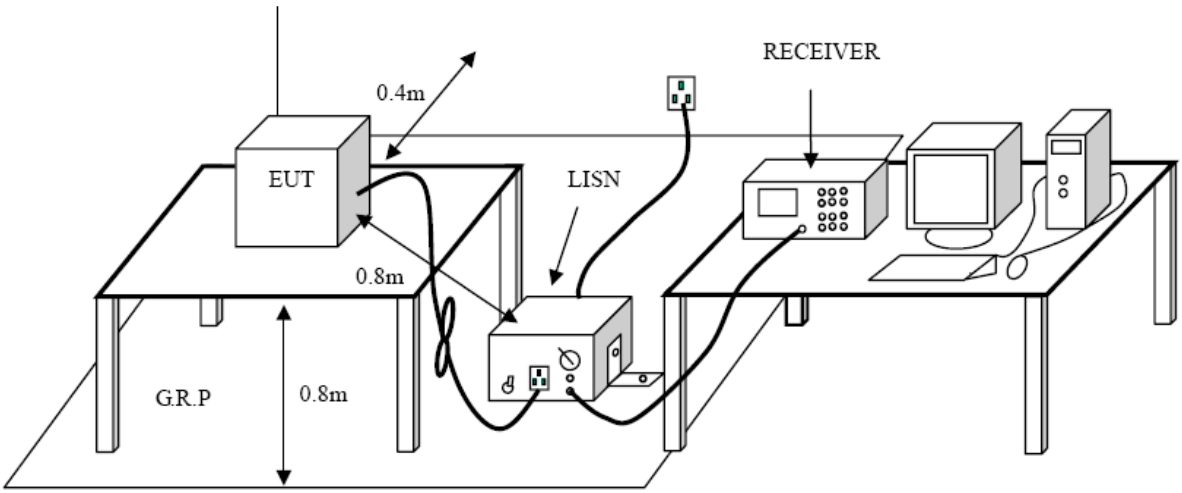

Test Procedure

1. The EUT was setup according to ANSI C63.10:2013 requirements.
2. The EUT was placed on a platform of nominal size, 1 m by 1.5 m, raised 80 cm above the conducting ground plane. The vertical conducting plane was located 40 cm to the rear of the EUT. All other surfaces of EUT were at least 80 cm from any other grounded conducting surface.
3. The EUT and simulators are connected to the main power through a line impedance stabilization network (LISN). The LISN provides a 50 ohm / 50 μH coupling impedance for the measuring equipment.
4. The peripheral devices are also connected to the main power through a LISN. (Please refer to the block diagram of the test setup and photographs)
5. Each current-carrying conductor of the EUT power cord, except the ground (safety) conductor, was individually connected through a LISN to the input power source.
6. The excess length of the power cord between the EUT and the LISN receptacle were folded back and forth at the center of the lead to form a bundle not exceeding 40 cm in length.
7. Conducted emissions were investigated over the frequency range from 0.15MHz to 30MHz using a receiver bandwidth of 9 kHz.
8. During the above scans, the emissions were maximized by cable manipulation.

Test Mode

Please refer to the clause 2.4.

Test Result

Test Voltage:	AC 120V/60Hz
Terminal:	Line
Remark:	Only worse case is reported

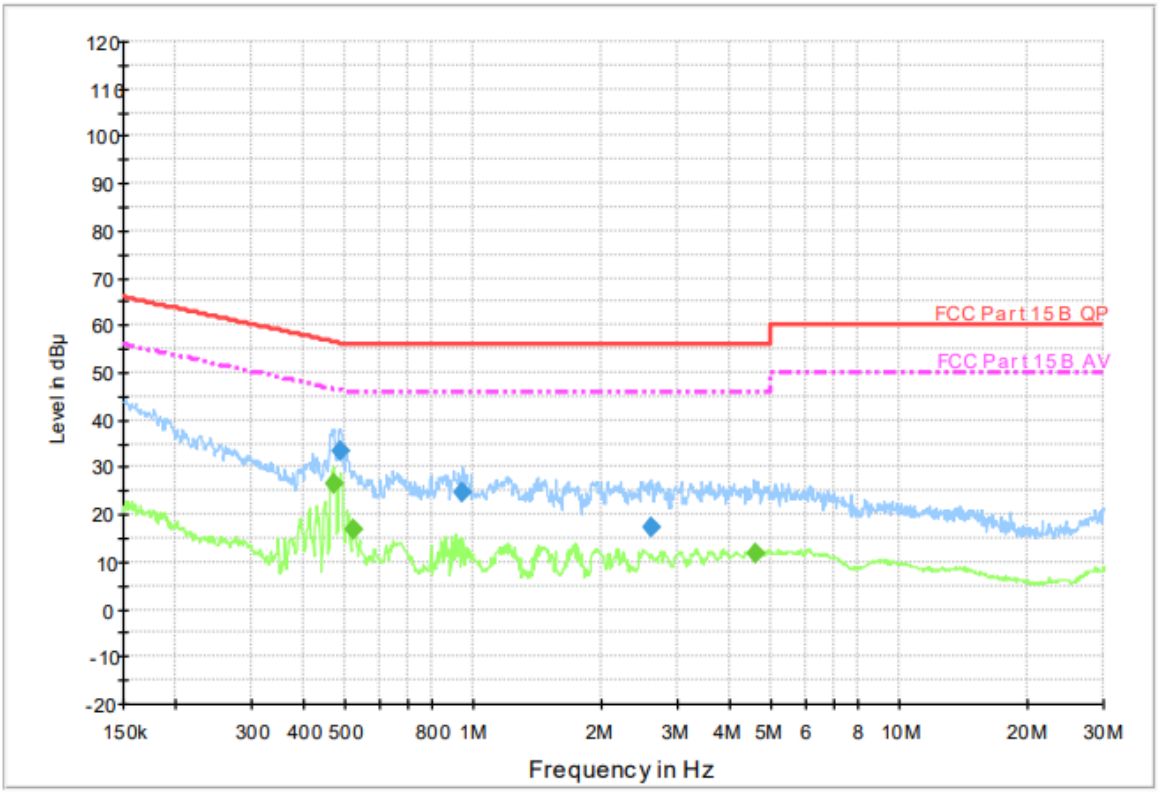

Final Measurement Detector 1

Frequency (MHz)	QuasiPeak (dBµ V)	Meas. Time (ms)	Bandwidth (kHz)	Filter	Line	Corr. (dB)	Margin (dB)	Limit (dBµ V)	Comment
0.485070	33.6	1000.00	9.000	On	L1	9.5	22.7	56.3	
0.941020	24.6	1000.00	9.000	On	L1	9.5	31.4	56.0	
2.593960	17.3	1000.00	9.000	On	L1	9.5	38.7	56.0	

Final Measurement Detector 2

Frequency (MHz)	Average (dBµ V)	Meas. Time (ms)	Bandwidth (kHz)	Filter	Line	Corr. (dB)	Margin (dB)	Limit (dBµ V)	Comment
0.466090	26.4	1000.00	9.000	On	L1	9.5	20.2	46.6	
0.523290	16.6	1000.00	9.000	On	L1	9.5	29.4	46.0	
4.590750	12.0	1000.00	9.000	On	L1	9.5	34.0	46.0	

Emission Level = Read Level + Correct Factor

Test Voltage:	AC 120V/60Hz
Terminal:	Neutral
Remark:	Only worse case is reported

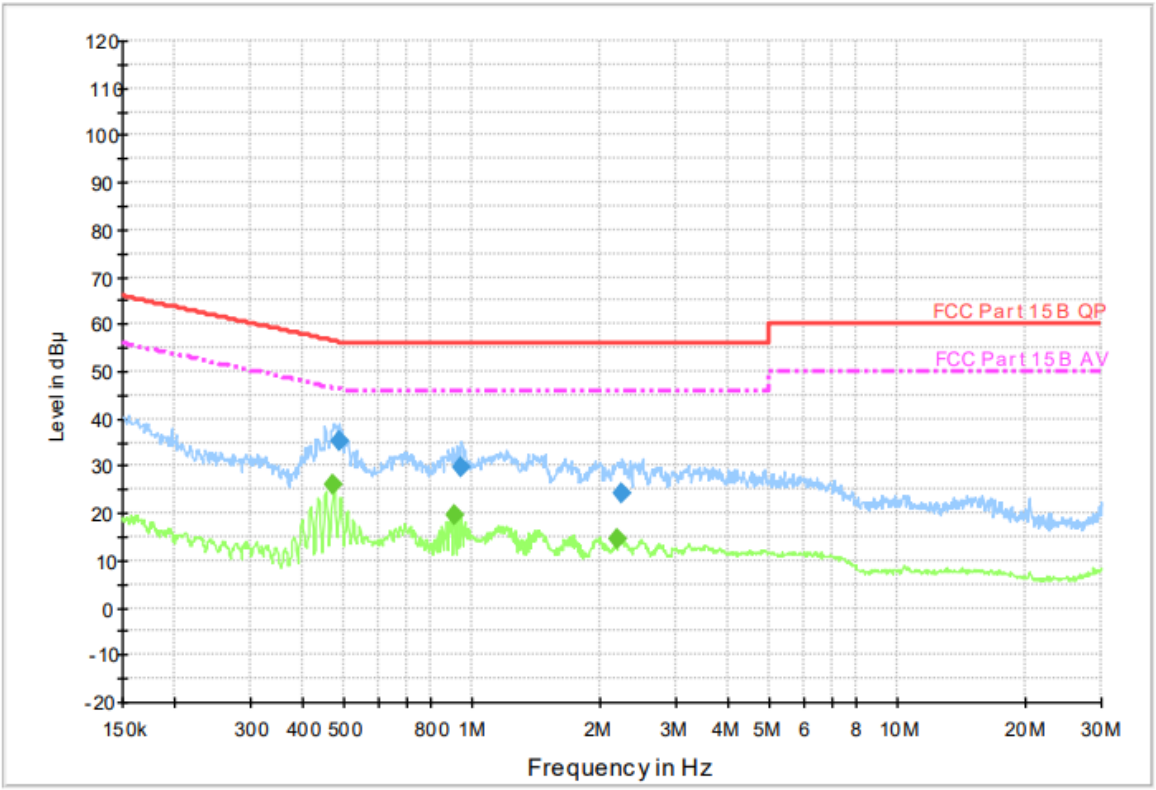

Final Measurement Detector 1

Frequency (MHz)	QuasiPeak (dBµ V)	Meas. Time (ms)	Bandwidth (kHz)	Filter	Line	Corr. (dB)	Margin (dB)	Limit (dBµ V)	Comment
0.485070	35.2	1000.00	9.000	On	N	9.4	21.1	56.3	
0.941020	29.7	1000.00	9.000	On	N	9.4	26.3	56.0	
2.246720	24.0	1000.00	9.000	On	N	9.4	32.0	56.0	

Final Measurement Detector 2

Frequency (MHz)	Average (dBµ V)	Meas. Time (ms)	Bandwidth (kHz)	Filter	Line	Corr. (dB)	Margin (dB)	Limit (dBµ V)	Comment
0.469820	26.0	1000.00	9.000	On	N	9.4	20.5	46.5	
0.904200	19.7	1000.00	9.000	On	N	9.4	26.3	46.0	
2.184810	14.3	1000.00	9.000	On	N	9.4	31.7	46.0	

Emission Level = Read Level + Correct Factor

3.2. Radiated Emission

Limit

FCC CFR Title 47 Part 15 Subpart C Section 15.209

Frequency (MHz)	Field Strength (microvolts/meter)	Measurement Distance (meters)
0.009~0.490	2400/F (kHz)	300
0.490~1.705	24000/F (kHz)	30
1.705~30.0	30	30
30~88	100	3
88~216	150	3
216~960	200	3
960~1000	500	3

Frequency Range (MHz)	dBμV/m (at 3 meters)	
	Peak	Average
Above 1000	74	54

Note:
(1) The tighter limit applies at the band edges.
(2) Emission Level (dBμV/m)=20log Emission Level (μV/m).

Limits of unwanted emission out of the restricted bands
FCC CFR Title 47 Part 15 Subpart E Section 15. 407(b) / RSS-247 6.2

Frequency (MHz)	EIRP Limits (dBm)	Equivalent Field Strength at 3m (dBμV/m)
5150~5250	-27	68.2
5250~5350	-27	68.2
5470~5725	-27	68.2
5725~5825	-27 (Note 2)	68.2
	10 (Note 2)	105.2
	15.6 (Note 2)	110.8
	27 (Note 2)	122.2

Note:
1. The following formula is used to convert the equipment isotropic radiated power (eirp) to field strength: E= $\frac{1000000\sqrt{30P}}{3}$ μV/m, where P is the eirp (Watts).
2. According to FCC 16-24, all emissions shall be limited to a level of -27 dBm/MHz at 75 MHz or more above or below the band edge increasing linearly to 10 dBm/MHz at 25 MHz above or below the band edge, and from 25MHz above or below the band edge increasing linearly to a level of 15.6 dBm/MHz at 5 MHz above or below the band edge, and from 5 MHz above or below the band edge increasing linearly to a level of 27dBm/MHz at the band edge.

Test Configuration

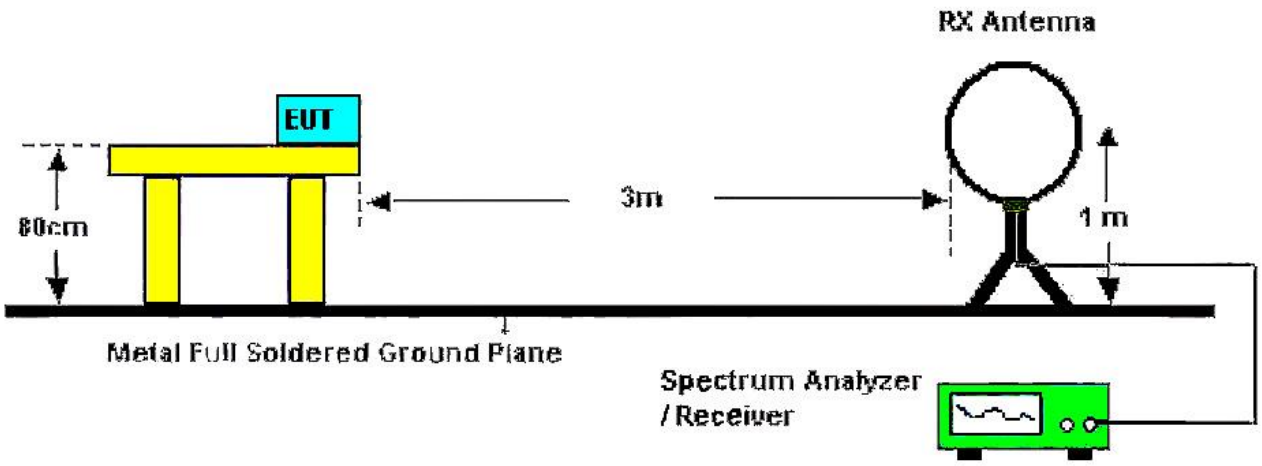

Below 30MHz Test Setup

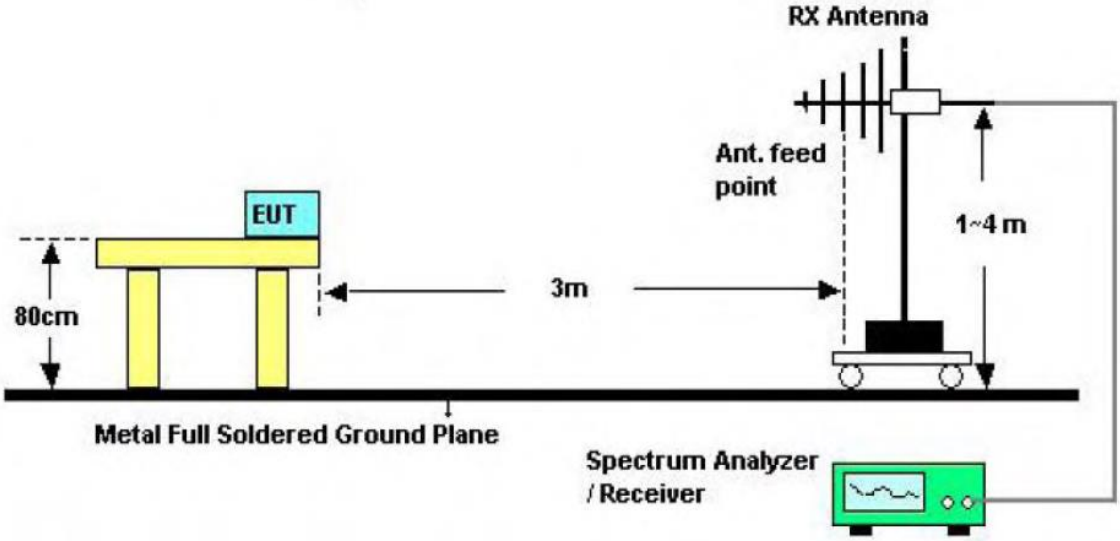

30-1000MHz Test Setup

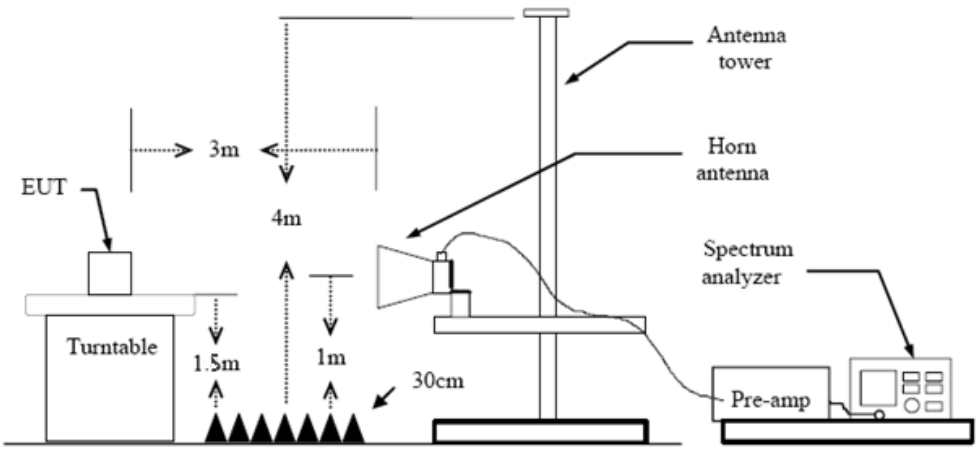

Above 1GHz Test Setup

Test Procedure

1. The EUT was setup and tested according to ANSI C63.10:2013.
2. The EUT is placed on a turn table which is 0.8 meter above ground for below 1 GHz, and 1.5 m for above 1 GHz. The turn table is rotated 360 degrees to determine the position of the maximum emission level.
3. The EUT was set 3 meters from the receiving antenna, which was mounted on the top of a variable height antenna tower.
4. For each suspected emission, the EUT was arranged to its worst case and then tune the Antenna tower (from 1 m to 4 m) and turntable (from 0 degree to 360 degrees) to find the maximum reading. A pre-amp and a high pass filter are used for the test in order to get better signal level to comply with the guidelines.
5. Set to the maximum power setting and enable the EUT transmit continuously.
6. Use the following spectrum analyzer settings

(1) Span shall wide enough to fully capture the emission being measured;
(2) 9k – 150kHz:
RBW=300 Hz, VBW=1 kHz, Sweep=auto, Detector function=peak, Trace=max hold
(3) 0.15M – 30MHz:
RBW=10 kHz, VBW=30 kHz, Sweep=auto, Detector function=peak, Trace=max hold
(4) 30M - 1 GHz:
RBW=120 kHz, VBW=300 kHz, Sweep=auto, Detector function=peak, Trace=max hold
If the emission level of the EUT measured by the peak detector is 3 dB lower than the applicable limit, the peak emission level will be reported. Otherwise, the emission measurement will be repeated using the quasi-peak detector and reported.
(5) From 1 GHz to 10th harmonic:
RBW=1MHz, VBW=3MHz Peak detector for Peak value.
RBW=1MHz, VBW see note 1 with Peak Detector for Average Value.
Note 1: For measurements above 1 GHz the resolution bandwidth is set to 1 MHz, then the video bandwidth is set to 3 MHz for peak measurements and 1 MHz resolution bandwidth with 1/T video bandwidth with peak detector for average measurements. For the Duty Cycle please refer to clause Duty Cycle.

Test Mode

Please refer to the clause 2.4.

Test Result

9 kHz~30 MHz

From 9 kHz to 30 MHz: The conclusion is PASS.

Note: 1. The amplitude of spurious emissions which are attenuated by more than 20dB below the permissible value has no need to be reported.
2. Pre-scan all antenna, only show the test data for worse case antenna on the test report.

30MHz-1GHz

Ant. No.	Ant 1
Ant. Pol.	Horizontal
Test Mode:	TX 802.11a Mode 5180MHz (U-NII-1)
Remark:	Only worse case is reported.

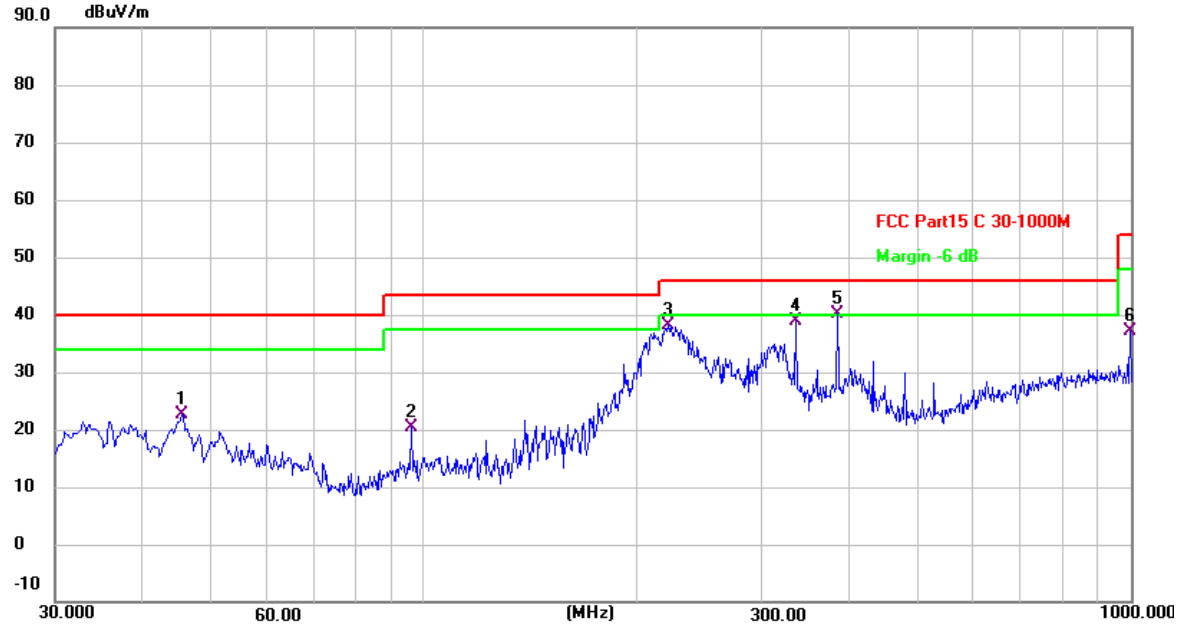

No.	Frequency (MHz)	Reading (dBuV)	Factor (dB/m)	Level (dBuV/m)	Limit (dBuV/m)	Margin (dB)	Detector
1	45.5200	36.40	-13.68	22.72	40.00	-17.28	QP
2	95.9600	36.87	-16.56	20.31	43.50	-23.19	QP
3	221.4133	53.43	-15.34	38.09	46.00	-7.91	QP
4	335.8733	51.13	-12.31	38.82	46.00	-7.18	QP
5 *	384.0500	51.56	-11.35	40.21	46.00	-5.79	QP
6	997.7367	39.11	-2.00	37.11	54.00	-16.89	QP

Remarks:
1.Factor (dB/m) = Antenna Factor (dB/m)+Cable Factor (dB)-Pre-amplifier Factor
2.Margin value = Level -Limit value

Ant. No.	Ant 1
Ant. Pol.	Vertical
Test Mode:	TX 802.11a Mode 5180MHz (U-NII-1)
Remark:	Only worse case is reported.

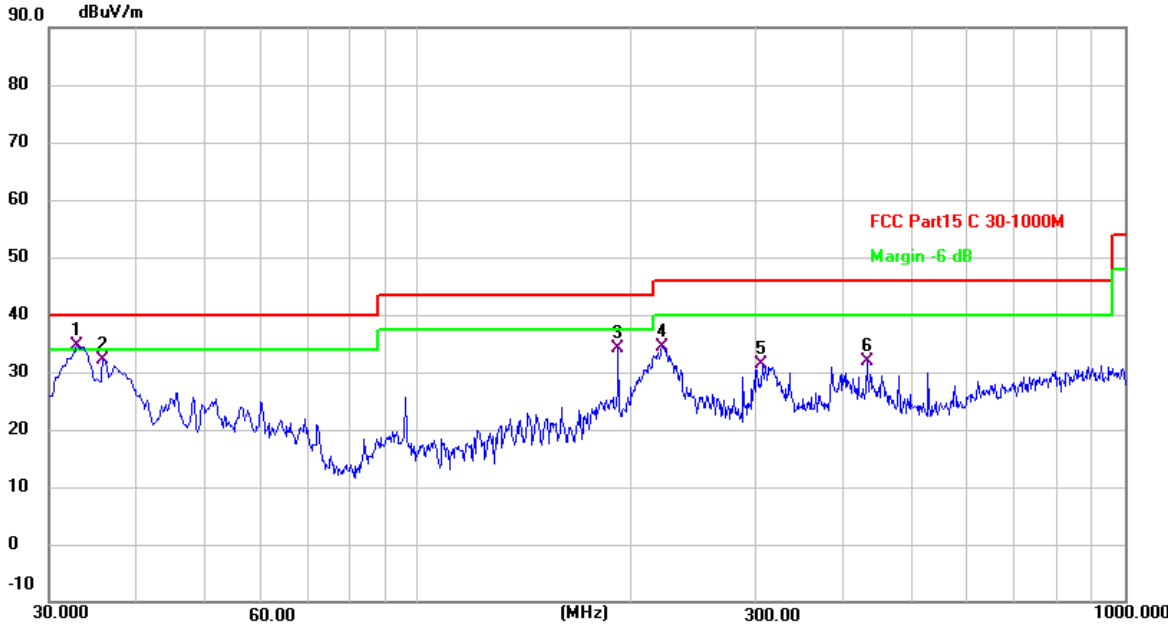

No.	Frequency (MHz)	Reading (dBuV)	Factor (dB/m)	Level (dBuV/m)	Limit (dBuV/m)	Margin (dB)	Detector
1 *	32.9100	50.19	-15.65	34.54	40.00	-5.46	QP
2	35.8200	47.67	-15.51	32.16	40.00	-7.84	QP
3	191.9900	50.84	-16.67	34.17	43.50	-9.33	QP
4	221.7367	49.66	-15.33	34.33	46.00	-11.67	QP
5	306.7732	44.60	-13.26	31.34	46.00	-14.66	QP
6	431.9033	42.60	-10.60	32.00	46.00	-14.00	QP

Remarks:
1.Factor (dB/m) = Antenna Factor (dB/m)+Cable Factor (dB)-Pre-amplifier Factor
2.Margin value = Level -Limit value

Above 1GHz

Ant. No.	Ant 1
Ant. Pol.	Horizontal
Test Mode:	TX 802.11a Mode 5180MHz (U-NII-1)
Remark:	No report for the emission which more than 20 dB below the prescribed limit.

No.	Frequency (MHz)	Reading (dBuV)	Factor (dB/m)	Level (dBuV/m)	Limit (dBuV/m)	Margin (dB)	Detector
1	10359.709	34.61	13.93	48.54	74.00	-25.46	peak
2 *	10360.831	18.48	13.92	32.40	54.00	-21.60	AVG

Remarks:
1.Factor (dB/m) = Antenna Factor (dB/m)+Cable Factor (dB)-Pre-amplifier Factor
2.Margin value = Level -Limit value

Ant. No.	Ant 1
Ant. Pol.	Vertical
Test Mode:	TX 802.11a Mode 5180MHz (U-NII-1)
Remark:	No report for the emission which more than 20 dB below the prescribed limit.

No.	Frequency (MHz)	Reading (dBuV)	Factor (dB/m)	Level (dBuV/m)	Limit (dBuV/m)	Margin (dB)	Detector
1	10359.377	43.95	13.93	57.88	74.00	-16.12	peak
2 *	10359.945	30.16	13.93	44.09	54.00	-9.91	AVG

Remarks:
1.Factor (dB/m) = Antenna Factor (dB/m)+Cable Factor (dB)-Pre-amplifier Factor
2.Margin value = Level -Limit value

Ant. No.	Ant 1
Ant. Pol.	Horizontal
Test Mode:	TX 802.11a Mode 5200MHz (U-NII-1)
Remark:	No report for the emission which more than 20 dB below the prescribed limit.

No.	Frequency (MHz)	Reading (dBuV)	Factor (dB/m)	Level (dBuV/m)	Limit (dBuV/m)	Margin (dB)	Detector
1	10399.609	36.09	13.99	50.08	74.00	-23.92	peak
2 *	10400.167	18.18	13.99	32.17	54.00	-21.83	AVG

Remarks:
1.Factor (dB/m) = Antenna Factor (dB/m)+Cable Factor (dB)-Pre-amplifier Factor
2.Margin value = Level -Limit value

Ant. No.	Ant 1
Ant. Pol.	Vertical
Test Mode:	TX 802.11a Mode 5200MHz (U-NII-1)
Remark:	No report for the emission which more than 20 dB below the prescribed limit.

No.	Frequency (MHz)	Reading (dBuV)	Factor (dB/m)	Level (dBuV/m)	Limit (dBuV/m)	Margin (dB)	Detector
1	10400.334	42.99	13.99	56.98	74.00	-17.02	peak
2 *	10400.707	30.27	13.99	44.26	54.00	-9.74	AVG

Remarks:
1.Factor (dB/m) = Antenna Factor (dB/m)+Cable Factor (dB)-Pre-amplifier Factor
2.Margin value = Level -Limit value

Ant. No.	Ant 1
Ant. Pol.	Horizontal
Test Mode:	TX 802.11a Mode 5240MHz (U-NII-1)
Remark:	No report for the emission which more than 20 dB below the prescribed limit.

No.	Frequency (MHz)	Reading (dBuV)	Factor (dB/m)	Level (dBuV/m)	Limit (dBuV/m)	Margin (dB)	Detector
1	10480.181	34.86	14.03	48.89	74.00	-25.11	peak
2 *	10480.602	17.80	14.03	31.83	54.00	-22.17	AVG

Remarks:
1.Factor (dB/m) = Antenna Factor (dB/m)+Cable Factor (dB)-Pre-amplifier Factor
2.Margin value = Level -Limit value

Ant. No.	Ant 1
Ant. Pol.	Vertical
Test Mode:	TX 802.11a Mode 5240MHz (U-NII-1)
Remark:	No report for the emission which more than 20 dB below the prescribed limit.

No.	Frequency (MHz)	Reading (dBuV)	Factor (dB/m)	Level (dBuV/m)	Limit (dBuV/m)	Margin (dB)	Detector
1 *	10479.683	27.57	14.03	41.60	54.00	-12.40	AVG
2	10480.969	42.11	14.03	56.14	74.00	-17.86	peak

Remarks:
1.Factor (dB/m) = Antenna Factor (dB/m)+Cable Factor (dB)-Pre-amplifier Factor
2.Margin value = Level -Limit value

Ant. No.	Ant 1 + Ant 2
Ant. Pol.	Horizontal
Test Mode:	TX 802.11n(HT20) Mode 5180MHz (U-NII-1)
Remark:	No report for the emission which more than 20 dB below the prescribed limit.

No.	Frequency (MHz)	Reading (dBuV)	Factor (dB/m)	Level (dBuV/m)	Limit (dBuV/m)	Margin (dB)	Detector
1 *	10359.542	23.02	13.93	36.95	54.00	-17.05	AVG
2	10359.729	38.75	13.93	52.68	74.00	-21.32	peak

Remarks:
1.Factor (dB/m) = Antenna Factor (dB/m)+Cable Factor (dB)-Pre-amplifier Factor
2.Margin value = Level -Limit value

Ant. No.	Ant 1 + Ant 2
Ant. Pol.	Vertical
Test Mode:	TX 802.11n(HT20) Mode 5180MHz (U-NII-1)
Remark:	No report for the emission which more than 20 dB below the prescribed limit.

No.	Frequency (MHz)	Reading (dBuV)	Factor (dB/m)	Level (dBuV/m)	Limit (dBuV/m)	Margin (dB)	Detector
1	10359.379	43.90	13.93	57.83	74.00	-16.17	peak
2 *	10360.205	27.81	13.93	41.74	54.00	-12.26	AVG

Remarks:
1.Factor (dB/m) = Antenna Factor (dB/m)+Cable Factor (dB)-Pre-amplifier Factor
2.Margin value = Level -Limit value

Ant. No.	Ant 1 + Ant 2
Ant. Pol.	Horizontal
Test Mode:	TX 802.11n(HT20) Mode 5200MHz (U-NII-1)
Remark:	No report for the emission which more than 20 dB below the prescribed limit.

No.	Frequency (MHz)	Reading (dBuV)	Factor (dB/m)	Level (dBuV/m)	Limit (dBuV/m)	Margin (dB)	Detector
1	10400.041	39.87	13.99	53.86	74.00	-20.14	peak
2 *	10400.695	24.09	13.99	38.08	54.00	-15.92	AVG

Remarks:
1.Factor (dB/m) = Antenna Factor (dB/m)+Cable Factor (dB)-Pre-amplifier Factor
2.Margin value = Level -Limit value

Ant. No.	Ant 1 + Ant 2
Ant. Pol.	Vertical
Test Mode:	TX 802.11n(HT20) Mode 5200MHz (U-NII-1)
Remark:	No report for the emission which more than 20 dB below the prescribed limit.

No.	Frequency (MHz)	Reading (dBuV)	Factor (dB/m)	Level (dBuV/m)	Limit (dBuV/m)	Margin (dB)	Detector
1 *	10400.313	28.19	13.99	42.18	54.00	-11.82	AVG
2	10400.493	42.45	13.99	56.44	74.00	-17.56	peak

Remarks:
1.Factor (dB/m) = Antenna Factor (dB/m)+Cable Factor (dB)-Pre-amplifier Factor
2.Margin value = Level -Limit value

Ant. No.	Ant 1 + Ant 2
Ant. Pol.	Horizontal
Test Mode:	TX 802.11n(HT20) Mode 5240MHz (U-NII-1)
Remark:	No report for the emission which more than 20 dB below the prescribed limit.

No.	Frequency (MHz)	Reading (dBuV)	Factor (dB/m)	Level (dBuV/m)	Limit (dBuV/m)	Margin (dB)	Detector
1	10479.413	38.53	14.03	52.56	74.00	-21.44	peak
2 *	10480.910	24.07	14.03	38.10	54.00	-15.90	AVG

Remarks:
1.Factor (dB/m) = Antenna Factor (dB/m)+Cable Factor (dB)-Pre-amplifier Factor
2.Margin value = Level -Limit value

Ant. No.	Ant 1 + Ant 2
Ant. Pol.	Vertical
Test Mode:	TX 802.11n(HT20) Mode 5240MHz (U-NII-1)
Remark:	No report for the emission which more than 20 dB below the prescribed limit.

No.	Frequency (MHz)	Reading (dBuV)	Factor (dB/m)	Level (dBuV/m)	Limit (dBuV/m)	Margin (dB)	Detector
1	10480.141	40.98	14.03	55.01	74.00	-18.99	peak
2 *	10480.997	26.89	14.03	40.92	54.00	-13.08	AVG

Remarks:
1.Factor (dB/m) = Antenna Factor (dB/m)+Cable Factor (dB)-Pre-amplifier Factor
2.Margin value = Level -Limit value

Ant. No.	Ant 1 + Ant 2
Ant. Pol.	Horizontal
Test Mode:	TX 802.11ac(VHT20) Mode 5180MHz (U-NII-1)
Remark:	No report for the emission which more than 20 dB below the prescribed limit.

No.	Frequency (MHz)	Reading (dBuV)	Factor (dB/m)	Level (dBuV/m)	Limit (dBuV/m)	Margin (dB)	Detector
1 *	10359.142	23.01	13.93	36.94	54.00	-17.06	AVG
2	10360.337	38.11	13.92	52.03	74.00	-21.97	peak

Remarks:
1.Factor (dB/m) = Antenna Factor (dB/m)+Cable Factor (dB)-Pre-amplifier Factor
2.Margin value = Level -Limit value

Ant. No.	Ant 1 + Ant 2
Ant. Pol.	Vertical
Test Mode:	TX 802.11ac(VHT20) Mode 5180MHz (U-NII-1)
Remark:	No report for the emission which more than 20 dB below the prescribed limit.

No.	Frequency (MHz)	Reading (dBuV)	Factor (dB/m)	Level (dBuV/m)	Limit (dBuV/m)	Margin (dB)	Detector
1	10359.072	39.96	13.93	53.89	74.00	-20.11	peak
2 *	10359.621	25.77	13.93	39.70	54.00	-14.30	AVG

Remarks:
1.Factor (dB/m) = Antenna Factor (dB/m)+Cable Factor (dB)-Pre-amplifier Factor
2.Margin value = Level -Limit value

Ant. No.	Ant 1 + Ant 2
Ant. Pol.	Horizontal
Test Mode:	TX 802.11ac(VHT20) Mode 5200MHz (U-NII-1)
Remark:	No report for the emission which more than 20 dB below the prescribed limit.

No.	Frequency (MHz)	Reading (dBuV)	Factor (dB/m)	Level (dBuV/m)	Limit (dBuV/m)	Margin (dB)	Detector
1	10400.090	39.61	13.99	53.60	74.00	-20.40	peak
2 *	10400.919	24.19	13.99	38.18	54.00	-15.82	AVG

Remarks:
1.Factor (dB/m) = Antenna Factor (dB/m)+Cable Factor (dB)-Pre-amplifier Factor
2.Margin value = Level -Limit value

Ant. No.	Ant 1 + Ant 2
Ant. Pol.	Vertical
Test Mode:	TX 802.11ac(VHT20) Mode 5200MHz (U-NII-1)
Remark:	No report for the emission which more than 20 dB below the prescribed limit.

No.	Frequency (MHz)	Reading (dBuV)	Factor (dB/m)	Level (dBuV/m)	Limit (dBuV/m)	Margin (dB)	Detector
1	10399.152	38.82	13.99	52.81	74.00	-21.19	peak
2 *	10399.867	24.14	13.99	38.13	54.00	-15.87	AVG

Remarks:
1.Factor (dB/m) = Antenna Factor (dB/m)+Cable Factor (dB)-Pre-amplifier Factor
2.Margin value = Level -Limit value

Ant. No.	Ant 1 + Ant 2
Ant. Pol.	Horizontal
Test Mode:	TX 802.11ac(VHT20) Mode 5240MHz (U-NII-1)
Remark:	No report for the emission which more than 20 dB below the prescribed limit.

No.	Frequency (MHz)	Reading (dBuV)	Factor (dB/m)	Level (dBuV/m)	Limit (dBuV/m)	Margin (dB)	Detector
1	10479.198	38.79	14.03	52.82	74.00	-21.18	peak
2 *	10479.987	23.81	14.03	37.84	54.00	-16.16	AVG

Remarks:
1.Factor (dB/m) = Antenna Factor (dB/m)+Cable Factor (dB)-Pre-amplifier Factor
2.Margin value = Level -Limit value

Ant. No.	Ant 1 + Ant 2
Ant. Pol.	Vertical
Test Mode:	TX 802.11ac(VHT20) Mode 5240MHz (U-NII-1)
Remark:	No report for the emission which more than 20 dB below the prescribed limit.

No.	Frequency (MHz)	Reading (dBuV)	Factor (dB/m)	Level (dBuV/m)	Limit (dBuV/m)	Margin (dB)	Detector
1 *	10479.823	23.87	14.03	37.90	54.00	-16.10	AVG
2	10480.269	39.82	14.03	53.85	74.00	-20.15	peak

Remarks:
1.Factor (dB/m) = Antenna Factor (dB/m)+Cable Factor (dB)-Pre-amplifier Factor
2.Margin value = Level -Limit value

Ant. No.	Ant 1 + Ant 2
Ant. Pol.	Horizontal
Test Mode:	TX 802.11ax(HE20) Mode 5180MHz (U-NII-1) 242/61
Remark:	No report for the emission which more than 20 dB below the prescribed limit.

No.	Frequency (MHz)	Reading (dBuV)	Factor (dB/m)	Level (dBuV/m)	Limit (dBuV/m)	Margin (dB)	Detector
1	10359.517	37.70	13.93	51.63	74.00	-22.37	peak
2 *	10359.967	23.21	13.93	37.14	54.00	-16.86	AVG

Remarks:
1.Factor (dB/m) = Antenna Factor (dB/m)+Cable Factor (dB)-Pre-amplifier Factor
2.Margin value = Level -Limit value

Ant. No.	Ant 1 + Ant 2
Ant. Pol.	Vertical
Test Mode:	TX 802.11ax(HE20) Mode 5180MHz (U-NII-1) 242/61
Remark:	No report for the emission which more than 20 dB below the prescribed limit.

No.	Frequency (MHz)	Reading (dBuV)	Factor (dB/m)	Level (dBuV/m)	Limit (dBuV/m)	Margin (dB)	Detector
1 *	10359.608	25.65	13.93	39.58	54.00	-14.42	AVG
2	10359.731	40.53	13.93	54.46	74.00	-19.54	peak

Remarks:
1.Factor (dB/m) = Antenna Factor (dB/m)+Cable Factor (dB)-Pre-amplifier Factor
2.Margin value = Level -Limit value

Ant. No.	Ant 1 + Ant 2
Ant. Pol.	Horizontal
Test Mode:	TX 802.11ax(HE20) Mode 5200MHz (U-NII-1) 242/61
Remark:	No report for the emission which more than 20 dB below the prescribed limit.

No.	Frequency (MHz)	Reading (dBuV)	Factor (dB/m)	Level (dBuV/m)	Limit (dBuV/m)	Margin (dB)	Detector
1	10400.214	38.71	13.99	52.70	74.00	-21.30	peak
2 *	10400.569	23.97	13.99	37.96	54.00	-16.04	AVG

Remarks:
1.Factor (dB/m) = Antenna Factor (dB/m)+Cable Factor (dB)-Pre-amplifier Factor
2.Margin value = Level -Limit value

Ant. No.	Ant 1 + Ant 2
Ant. Pol.	Vertical
Test Mode:	TX 802.11ax(HE20) Mode 5200MHz (U-NII-1) 242/61
Remark:	No report for the emission which more than 20 dB below the prescribed limit.

No.	Frequency (MHz)	Reading (dBuV)	Factor (dB/m)	Level (dBuV/m)	Limit (dBuV/m)	Margin (dB)	Detector
1	10399.433	40.11	13.99	54.10	74.00	-19.90	peak
2 *	10400.595	23.93	13.99	37.92	54.00	-16.08	AVG

Remarks:
1.Factor (dB/m) = Antenna Factor (dB/m)+Cable Factor (dB)-Pre-amplifier Factor
2.Margin value = Level -Limit value

Ant. No.	Ant 1 + Ant 2
Ant. Pol.	Horizontal
Test Mode:	TX 802.11ax(HE20) Mode 5240MHz (U-NII-1) 242/61
Remark:	No report for the emission which more than 20 dB below the prescribed limit.

No.	Frequency (MHz)	Reading (dBuV)	Factor (dB/m)	Level (dBuV/m)	Limit (dBuV/m)	Margin (dB)	Detector
1	10479.792	39.04	14.03	53.07	74.00	-20.93	peak
2 *	10479.807	23.94	14.03	37.97	54.00	-16.03	AVG

Remarks:
1.Factor (dB/m) = Antenna Factor (dB/m)+Cable Factor (dB)-Pre-amplifier Factor
2.Margin value = Level -Limit value

Ant. No.	Ant 1 + Ant 2
Ant. Pol.	Vertical
Test Mode:	TX 802.11ax(HE20) Mode 5240MHz (U-NII-1) 242/61
Remark:	No report for the emission which more than 20 dB below the prescribed limit.

No.	Frequency (MHz)	Reading (dBuV)	Factor (dB/m)	Level (dBuV/m)	Limit (dBuV/m)	Margin (dB)	Detector
1	10479.497	39.35	14.03	53.38	74.00	-20.62	peak
2 *	10480.495	23.92	14.03	37.95	54.00	-16.05	AVG

Remarks:
1.Factor (dB/m) = Antenna Factor (dB/m)+Cable Factor (dB)-Pre-amplifier Factor
2.Margin value = Level -Limit value

Ant. No.	Ant 1 + Ant 2
Ant. Pol.	Horizontal
Test Mode:	TX 802.11n(HT40) Mode 5190MHz (U-NII-1)
Remark:	No report for the emission which more than 20 dB below the prescribed limit.

No.	Frequency (MHz)	Reading (dBuV)	Factor (dB/m)	Level (dBuV/m)	Limit (dBuV/m)	Margin (dB)	Detector
1 *	10379.302	23.55	13.96	37.51	54.00	-16.49	AVG
2	10379.591	39.03	13.96	52.99	74.00	-21.01	peak

Remarks:
1.Factor (dB/m) = Antenna Factor (dB/m)+Cable Factor (dB)-Pre-amplifier Factor
2.Margin value = Level -Limit value

Ant. No.	Ant 1 + Ant 2
Ant. Pol.	Vertical
Test Mode:	TX 802.11n(HT40) Mode 5190MHz (U-NII-1)
Remark:	No report for the emission which more than 20 dB below the prescribed limit.

No.	Frequency (MHz)	Reading (dBuV)	Factor (dB/m)	Level (dBuV/m)	Limit (dBuV/m)	Margin (dB)	Detector
1 *	10380.427	27.22	13.96	41.18	54.00	-12.82	AVG
2	10380.963	39.60	13.96	53.56	74.00	-20.44	peak

Remarks:
1.Factor (dB/m) = Antenna Factor (dB/m)+Cable Factor (dB)-Pre-amplifier Factor
2.Margin value = Level -Limit value

Ant. No.	Ant 1 + Ant 2
Ant. Pol.	Horizontal
Test Mode:	TX 802.11n(HT40) Mode 5230MHz (U-NII-1)
Remark:	No report for the emission which more than 20 dB below the prescribed limit.

No.	Frequency (MHz)	Reading (dBuV)	Factor (dB/m)	Level (dBuV/m)	Limit (dBuV/m)	Margin (dB)	Detector
1	10459.351	38.44	14.02	52.46	74.00	-21.54	peak
2 *	10460.480	23.31	14.02	37.33	54.00	-16.67	AVG

Remarks:
1.Factor (dB/m) = Antenna Factor (dB/m)+Cable Factor (dB)-Pre-amplifier Factor
2.Margin value = Level -Limit value

Ant. No.	Ant 1 + Ant 2
Ant. Pol.	Vertical
Test Mode:	TX 802.11n(HT40) Mode 5230MHz (U-NII-1)
Remark:	No report for the emission which more than 20 dB below the prescribed limit.

No.	Frequency (MHz)	Reading (dBuV)	Factor (dB/m)	Level (dBuV/m)	Limit (dBuV/m)	Margin (dB)	Detector
1 *	10460.625	23.04	14.02	37.06	54.00	-16.94	AVG
2	10460.920	38.39	14.02	52.41	74.00	-21.59	peak

Remarks:
1.Factor (dB/m) = Antenna Factor (dB/m)+Cable Factor (dB)-Pre-amplifier Factor
2.Margin value = Level -Limit value

Ant. No.	Ant 1 + Ant 2
Ant. Pol.	Horizontal
Test Mode:	TX 802.11ac(VHT40) Mode 5190MHz (U-NII-1)
Remark:	No report for the emission which more than 20 dB below the prescribed limit.

No.	Frequency (MHz)	Reading (dBuV)	Factor (dB/m)	Level (dBuV/m)	Limit (dBuV/m)	Margin (dB)	Detector
1	10379.655	38.28	13.96	52.24	74.00	-21.76	peak
2 *	10379.667	23.36	13.96	37.32	54.00	-16.68	AVG

Remarks:
1.Factor (dB/m) = Antenna Factor (dB/m)+Cable Factor (dB)-Pre-amplifier Factor
2.Margin value = Level -Limit value

Ant. No.	Ant 1 + Ant 2
Ant. Pol.	Vertical
Test Mode:	TX 802.11ac(VHT40) Mode 5190MHz (U-NII-1)
Remark:	No report for the emission which more than 20 dB below the prescribed limit.

No.	Frequency (MHz)	Reading (dBuV)	Factor (dB/m)	Level (dBuV/m)	Limit (dBuV/m)	Margin (dB)	Detector
1	10379.095	37.96	13.96	51.92	74.00	-22.08	peak
2 *	10379.479	23.53	13.96	37.49	54.00	-16.51	AVG

Remarks:
1.Factor (dB/m) = Antenna Factor (dB/m)+Cable Factor (dB)-Pre-amplifier Factor
2.Margin value = Level -Limit value

Ant. No.	Ant 1 + Ant 2
Ant. Pol.	Horizontal
Test Mode:	TX 802.11ac(VHT40) Mode 5230MHz (U-NII-1)
Remark:	No report for the emission which more than 20 dB below the prescribed limit.

No.	Frequency (MHz)	Reading (dBuV)	Factor (dB/m)	Level (dBuV/m)	Limit (dBuV/m)	Margin (dB)	Detector
1	10460.199	37.91	14.02	51.93	74.00	-22.07	peak
2 *	10460.476	23.08	14.02	37.10	54.00	-16.90	AVG

Remarks:
1.Factor (dB/m) = Antenna Factor (dB/m)+Cable Factor (dB)-Pre-amplifier Factor
2.Margin value = Level -Limit value

Ant. No.	Ant 1 + Ant 2
Ant. Pol.	Vertical
Test Mode:	TX 802.11ac(VHT40) Mode 5230MHz (U-NII-1)
Remark:	No report for the emission which more than 20 dB below the prescribed limit.

No.	Frequency (MHz)	Reading (dBuV)	Factor (dB/m)	Level (dBuV/m)	Limit (dBuV/m)	Margin (dB)	Detector
1 *	10459.923	22.96	14.02	36.98	54.00	-17.02	AVG
2	10460.940	39.02	14.02	53.04	74.00	-20.96	peak

Remarks:
1.Factor (dB/m) = Antenna Factor (dB/m)+Cable Factor (dB)-Pre-amplifier Factor
2.Margin value = Level -Limit value

Ant. No.	Ant 1 + Ant 2
Ant. Pol.	Horizontal
Test Mode:	TX 802.11ax(HE40) Mode 5190MHz (U-NII-1) 484/65
Remark:	No report for the emission which more than 20 dB below the prescribed limit.

No.	Frequency (MHz)	Reading (dBuV)	Factor (dB/m)	Level (dBuV/m)	Limit (dBuV/m)	Margin (dB)	Detector
1	10379.399	38.96	13.96	52.92	74.00	-21.08	peak
2 *	10379.795	23.33	13.96	37.29	54.00	-16.71	AVG

Remarks:
1.Factor (dB/m) = Antenna Factor (dB/m)+Cable Factor (dB)-Pre-amplifier Factor
2.Margin value = Level -Limit value

Ant. No.	Ant 1 + Ant 2
Ant. Pol.	Vertical
Test Mode:	TX 802.11ax(HE40) Mode 5190MHz (U-NII-1) 484/65
Remark:	No report for the emission which more than 20 dB below the prescribed limit.

No.	Frequency (MHz)	Reading (dBuV)	Factor (dB/m)	Level (dBuV/m)	Limit (dBuV/m)	Margin (dB)	Detector
1 *	10380.005	23.34	13.96	37.30	54.00	-16.70	AVG
2	10380.951	38.29	13.96	52.25	74.00	-21.75	peak

Remarks:
1.Factor (dB/m) = Antenna Factor (dB/m)+Cable Factor (dB)-Pre-amplifier Factor
2.Margin value = Level -Limit value

Ant. No.	Ant 1 + Ant 2
Ant. Pol.	Horizontal
Test Mode:	TX 802.11ax(HE40) Mode 5230MHz (U-NII-1) 484/65
Remark:	No report for the emission which more than 20 dB below the prescribed limit.

No.	Frequency (MHz)	Reading (dBuV)	Factor (dB/m)	Level (dBuV/m)	Limit (dBuV/m)	Margin (dB)	Detector
1	10459.940	37.90	14.02	51.92	74.00	-22.08	peak
2 *	10460.847	23.29	14.02	37.31	54.00	-16.69	AVG

Remarks:
1.Factor (dB/m) = Antenna Factor (dB/m)+Cable Factor (dB)-Pre-amplifier Factor
2.Margin value = Level -Limit value

Ant. No.	Ant 1 + Ant 2
Ant. Pol.	Vertical
Test Mode:	TX 802.11ax(HE40) Mode 5230MHz (U-NII-1) 484/65
Remark:	No report for the emission which more than 20 dB below the prescribed limit.

No.	Frequency (MHz)	Reading (dBuV)	Factor (dB/m)	Level (dBuV/m)	Limit (dBuV/m)	Margin (dB)	Detector
1	10460.759	38.47	14.02	52.49	74.00	-21.51	peak
2 *	10460.930	23.20	14.02	37.22	54.00	-16.78	AVG

Remarks:
1.Factor (dB/m) = Antenna Factor (dB/m)+Cable Factor (dB)-Pre-amplifier Factor
2.Margin value = Level -Limit value

Ant. No.	Ant 1 + Ant 2
Ant. Pol.	Horizontal
Test Mode:	TX 802.11ac(VHT80) Mode 5210MHz (U-NII-1)
Remark:	No report for the emission which more than 20 dB below the prescribed limit.

No.	Frequency (MHz)	Reading (dBuV)	Factor (dB/m)	Level (dBuV/m)	Limit (dBuV/m)	Margin (dB)	Detector
1 *	10419.194	23.49	13.99	37.48	54.00	-16.52	AVG
2	10419.471	38.30	13.99	52.29	74.00	-21.71	peak

Remarks:
1.Factor (dB/m) = Antenna Factor (dB/m)+Cable Factor (dB)-Pre-amplifier Factor
2.Margin value = Level -Limit value

Ant. No.	Ant 1 + Ant 2
Ant. Pol.	Vertical
Test Mode:	TX 802.11ac(VHT80) Mode 5210MHz (U-NII-1)
Remark:	No report for the emission which more than 20 dB below the prescribed limit.

No.	Frequency (MHz)	Reading (dBuV)	Factor (dB/m)	Level (dBuV/m)	Limit (dBuV/m)	Margin (dB)	Detector
1	10419.062	38.00	13.99	51.99	74.00	-22.01	peak
2 *	10419.382	23.55	13.99	37.54	54.00	-16.46	AVG

Remarks:
1.Factor (dB/m) = Antenna Factor (dB/m)+Cable Factor (dB)-Pre-amplifier Factor
2.Margin value = Level -Limit value

Ant. No.	Ant 1 + Ant 2
Ant. Pol.	Horizontal
Test Mode:	TX 802.11ax(HE80) Mode 5210MHz (U-NII-1) 996/67
Remark:	No report for the emission which more than 20 dB below the prescribed limit.

No.	Frequency (MHz)	Reading (dBuV)	Factor (dB/m)	Level (dBuV/m)	Limit (dBuV/m)	Margin (dB)	Detector
1	10420.000	39.40	13.99	53.39	74.00	-20.61	peak
2 *	10420.000	23.59	13.99	37.58	54.00	-16.42	AVG

Remarks:
1.Factor (dB/m) = Antenna Factor (dB/m)+Cable Factor (dB)-Pre-amplifier Factor
2.Margin value = Level -Limit value

Ant. No.	Ant 1 + Ant 2
Ant. Pol.	Vertical
Test Mode:	TX 802.11ax(HE80) Mode 5210MHz (U-NII-1) 996/67
Remark:	No report for the emission which more than 20 dB below the prescribed limit.

No.	Frequency (MHz)	Reading (dBuV)	Factor (dB/m)	Level (dBuV/m)	Limit (dBuV/m)	Margin (dB)	Detector
1	10419.029	37.70	13.99	51.69	74.00	-22.31	peak
2 *	10419.814	23.93	13.99	37.92	54.00	-16.08	AVG

Remarks:
1.Factor (dB/m) = Antenna Factor (dB/m)+Cable Factor (dB)-Pre-amplifier Factor
2.Margin value = Level -Limit value

Ant. No.	Ant 1
Ant. Pol.	Horizontal
Test Mode:	TX 802.11a Mode 5260MHz (U-NII-2A)
Remark:	No report for the emission which more than 20 dB below the prescribed limit.

No.	Frequency (MHz)	Reading (dBuV)	Factor (dB/m)	Level (dBuV/m)	Limit (dBuV/m)	Margin (dB)	Detector
1 *	10519.092	17.05	14.06	31.11	54.00	-22.89	AVG
2	10519.804	35.19	14.06	49.25	74.00	-24.75	peak

Remarks:
1.Factor (dB/m) = Antenna Factor (dB/m)+Cable Factor (dB)-Pre-amplifier Factor
2.Margin value = Level -Limit value

Ant. No.	Ant 1
Ant. Pol.	Vertical
Test Mode:	TX 802.11a Mode 5260MHz (U-NII-2A)
Remark:	No report for the emission which more than 20 dB below the prescribed limit.

No.	Frequency (MHz)	Reading (dBuV)	Factor (dB/m)	Level (dBuV/m)	Limit (dBuV/m)	Margin (dB)	Detector
1	10519.125	39.82	14.06	53.88	74.00	-20.12	peak
2 *	10519.789	25.52	14.06	39.58	54.00	-14.42	AVG

Remarks:
1.Factor (dB/m) = Antenna Factor (dB/m)+Cable Factor (dB)-Pre-amplifier Factor
2.Margin value = Level -Limit value

Ant. No.	Ant 1
Ant. Pol.	Horizontal
Test Mode:	TX 802.11a Mode 5280MHz (U-NII-2A)
Remark:	No report for the emission which more than 20 dB below the prescribed limit.

No.	Frequency (MHz)	Reading (dBuV)	Factor (dB/m)	Level (dBuV/m)	Limit (dBuV/m)	Margin (dB)	Detector
1	10559.807	33.90	14.10	48.00	74.00	-26.00	peak
2 *	10559.869	16.73	14.10	30.83	54.00	-23.17	AVG

Remarks:
1.Factor (dB/m) = Antenna Factor (dB/m)+Cable Factor (dB)-Pre-amplifier Factor
2.Margin value = Level -Limit value

Ant. No.	Ant 1
Ant. Pol.	Vertical
Test Mode:	TX 802.11a Mode 5280MHz (U-NII-2A)
Remark:	No report for the emission which more than 20 dB below the prescribed limit.

No.	Frequency (MHz)	Reading (dBuV)	Factor (dB/m)	Level (dBuV/m)	Limit (dBuV/m)	Margin (dB)	Detector
1	10559.825	39.79	14.10	53.89	74.00	-20.11	peak
2 *	10560.139	25.14	14.10	39.24	54.00	-14.76	AVG

Remarks:
1.Factor (dB/m) = Antenna Factor (dB/m)+Cable Factor (dB)-Pre-amplifier Factor
2.Margin value = Level -Limit value

Ant. No.	Ant 1
Ant. Pol.	Horizontal
Test Mode:	TX 802.11a Mode 5320MHz (U-NII-2A)
Remark:	No report for the emission which more than 20 dB below the prescribed limit.

No.	Frequency (MHz)	Reading (dBuV)	Factor (dB/m)	Level (dBuV/m)	Limit (dBuV/m)	Margin (dB)	Detector
1 *	10639.471	16.50	14.23	30.73	54.00	-23.27	AVG
2	10639.874	33.63	14.23	47.86	74.00	-26.14	peak

Remarks:
1.Factor (dB/m) = Antenna Factor (dB/m)+Cable Factor (dB)-Pre-amplifier Factor
2.Margin value = Level -Limit value

Ant. No.	Ant 1
Ant. Pol.	Vertical
Test Mode:	TX 802.11a Mode 5320MHz (U-NII-2A)
Remark:	No report for the emission which more than 20 dB below the prescribed limit.

No.	Frequency (MHz)	Reading (dBuV)	Factor (dB/m)	Level (dBuV/m)	Limit (dBuV/m)	Margin (dB)	Detector
1	10640.335	38.16	14.23	52.39	74.00	-21.61	peak
2 *	10640.985	23.92	14.23	38.15	54.00	-15.85	AVG

Remarks:
1.Factor (dB/m) = Antenna Factor (dB/m)+Cable Factor (dB)-Pre-amplifier Factor
2.Margin value = Level -Limit value

Ant. No.	Ant 1 + Ant 2
Ant. Pol.	Horizontal
Test Mode:	TX 802.11n(HT20) Mode 5260MHz (U-NII-2A)
Remark:	No report for the emission which more than 20 dB below the prescribed limit.

No.	Frequency (MHz)	Reading (dBuV)	Factor (dB/m)	Level (dBuV/m)	Limit (dBuV/m)	Margin (dB)	Detector
1 *	10519.051	22.74	14.06	36.80	54.00	-17.20	AVG
2	10519.161	37.29	14.06	51.35	74.00	-22.65	peak

Remarks:
1.Factor (dB/m) = Antenna Factor (dB/m)+Cable Factor (dB)-Pre-amplifier Factor
2.Margin value = Level -Limit value

Ant. No.	Ant 1 + Ant 2
Ant. Pol.	Vertical
Test Mode:	TX 802.11n(HT20) Mode 5260MHz (U-NII-2A)
Remark:	No report for the emission which more than 20 dB below the prescribed limit.

No.	Frequency (MHz)	Reading (dBuV)	Factor (dB/m)	Level (dBuV/m)	Limit (dBuV/m)	Margin (dB)	Detector
1	10520.893	41.67	14.06	55.73	74.00	-18.27	peak
2 *	10520.899	28.07	14.06	42.13	54.00	-11.87	AVG

Remarks:
1.Factor (dB/m) = Antenna Factor (dB/m)+Cable Factor (dB)-Pre-amplifier Factor
2.Margin value = Level -Limit value

Ant. No.	Ant 1 + Ant 2
Ant. Pol.	Horizontal
Test Mode:	TX 802.11n(HT20) Mode 5280MHz (U-NII-2A)
Remark:	No report for the emission which more than 20 dB below the prescribed limit.

No.	Frequency (MHz)	Reading (dBuV)	Factor (dB/m)	Level (dBuV/m)	Limit (dBuV/m)	Margin (dB)	Detector
1 *	10559.483	23.47	14.10	37.57	54.00	-16.43	AVG
2	10560.489	38.35	14.10	52.45	74.00	-21.55	peak

Remarks:
1.Factor (dB/m) = Antenna Factor (dB/m)+Cable Factor (dB)-Pre-amplifier Factor
2.Margin value = Level -Limit value

Ant. No.	Ant 1 + Ant 2
Ant. Pol.	Vertical
Test Mode:	TX 802.11n(HT20) Mode 5280MHz (U-NII-2A)
Remark:	No report for the emission which more than 20 dB below the prescribed limit.

No.	Frequency (MHz)	Reading (dBuV)	Factor (dB/m)	Level (dBuV/m)	Limit (dBuV/m)	Margin (dB)	Detector
1	10559.385	43.09	14.10	57.19	74.00	-16.81	peak
2 *	10560.626	29.59	14.10	43.69	54.00	-10.31	AVG

Remarks:
1.Factor (dB/m) = Antenna Factor (dB/m)+Cable Factor (dB)-Pre-amplifier Factor
2.Margin value = Level -Limit value

Ant. No.	Ant 1 + Ant 2
Ant. Pol.	Horizontal
Test Mode:	TX 802.11n(HT20) Mode 5320MHz (U-NII-2A)
Remark:	No report for the emission which more than 20 dB below the prescribed limit.

No.	Frequency (MHz)	Reading (dBuV)	Factor (dB/m)	Level (dBuV/m)	Limit (dBuV/m)	Margin (dB)	Detector
1	10640.131	38.33	14.23	52.56	74.00	-21.44	peak
2 *	10640.903	23.35	14.23	37.58	54.00	-16.42	AVG

Remarks:
1.Factor (dB/m) = Antenna Factor (dB/m)+Cable Factor (dB)-Pre-amplifier Factor
2.Margin value = Level -Limit value

Ant. No.	Ant 1 + Ant 2
Ant. Pol.	Vertical
Test Mode:	TX 802.11n(HT20) Mode 5320MHz (U-NII-2A)
Remark:	No report for the emission which more than 20 dB below the prescribed limit.

No.	Frequency (MHz)	Reading (dBuV)	Factor (dB/m)	Level (dBuV/m)	Limit (dBuV/m)	Margin (dB)	Detector
1 *	10640.779	29.80	14.23	44.03	54.00	-9.97	AVG
2	10640.784	43.63	14.23	57.86	74.00	-16.14	peak

Remarks:
1.Factor (dB/m) = Antenna Factor (dB/m)+Cable Factor (dB)-Pre-amplifier Factor
2.Margin value = Level -Limit value

Ant. No.	Ant 1 + Ant 2
Ant. Pol.	Horizontal
Test Mode:	TX 802.11ac(VHT20) Mode 5260MHz (U-NII-2A)
Remark:	No report for the emission which more than 20 dB below the prescribed limit.

No.	Frequency (MHz)	Reading (dBuV)	Factor (dB/m)	Level (dBuV/m)	Limit (dBuV/m)	Margin (dB)	Detector
1 *	10520.289	22.77	14.06	36.83	54.00	-17.17	AVG
2	10520.578	38.94	14.06	53.00	74.00	-21.00	peak

Remarks:
1.Factor (dB/m) = Antenna Factor (dB/m)+Cable Factor (dB)-Pre-amplifier Factor
2.Margin value = Level -Limit value

Ant. No.	Ant 1 + Ant 2
Ant. Pol.	Vertical
Test Mode:	TX 802.11ac(VHT20) Mode 5260MHz (U-NII-2A)
Remark:	No report for the emission which more than 20 dB below the prescribed limit.

No.	Frequency (MHz)	Reading (dBuV)	Factor (dB/m)	Level (dBuV/m)	Limit (dBuV/m)	Margin (dB)	Detector
1 *	10519.847	22.76	14.06	36.82	54.00	-17.18	AVG
2	10520.709	38.17	14.06	52.23	74.00	-21.77	peak

Remarks:
1.Factor (dB/m) = Antenna Factor (dB/m)+Cable Factor (dB)-Pre-amplifier Factor
2.Margin value = Level -Limit value

Ant. No.	Ant 1 + Ant 2
Ant. Pol.	Horizontal
Test Mode:	TX 802.11ac(VHT20) Mode 5280MHz (U-NII-2A)
Remark:	No report for the emission which more than 20 dB below the prescribed limit.

No.	Frequency (MHz)	Reading (dBuV)	Factor (dB/m)	Level (dBuV/m)	Limit (dBuV/m)	Margin (dB)	Detector
1	10559.801	38.45	14.10	52.55	74.00	-21.45	peak
2 *	10559.806	23.36	14.10	37.46	54.00	-16.54	AVG

Remarks:
1.Factor (dB/m) = Antenna Factor (dB/m)+Cable Factor (dB)-Pre-amplifier Factor
2.Margin value = Level -Limit value

Ant. No.	Ant 1 + Ant 2
Ant. Pol.	Vertical
Test Mode:	TX 802.11ac(VHT20) Mode 5280MHz (U-NII-2A)
Remark:	No report for the emission which more than 20 dB below the prescribed limit.

No.	Frequency (MHz)	Reading (dBuV)	Factor (dB/m)	Level (dBuV/m)	Limit (dBuV/m)	Margin (dB)	Detector
1 *	10559.476	23.54	14.10	37.64	54.00	-16.36	AVG
2	10560.972	37.73	14.10	51.83	74.00	-22.17	peak

Remarks:
1.Factor (dB/m) = Antenna Factor (dB/m)+Cable Factor (dB)-Pre-amplifier Factor
2.Margin value = Level -Limit value

Ant. No.	Ant 1 + Ant 2
Ant. Pol.	Horizontal
Test Mode:	TX 802.11ac(VHT20) Mode 5320MHz (U-NII-2A)
Remark:	No report for the emission which more than 20 dB below the prescribed limit.

No.	Frequency (MHz)	Reading (dBuV)	Factor (dB/m)	Level (dBuV/m)	Limit (dBuV/m)	Margin (dB)	Detector
1 *	10639.181	23.43	14.23	37.66	54.00	-16.34	AVG
2	10639.497	38.04	14.23	52.27	74.00	-21.73	peak

Remarks:
1.Factor (dB/m) = Antenna Factor (dB/m)+Cable Factor (dB)-Pre-amplifier Factor
2.Margin value = Level -Limit value

Ant. No.	Ant 1 + Ant 2
Ant. Pol.	Vertical
Test Mode:	TX 802.11ac(VHT20) Mode 5320MHz (U-NII-2A)
Remark:	No report for the emission which more than 20 dB below the prescribed limit.

No.	Frequency (MHz)	Reading (dBuV)	Factor (dB/m)	Level (dBuV/m)	Limit (dBuV/m)	Margin (dB)	Detector
1 *	10640.058	23.74	14.23	37.97	54.00	-16.03	AVG
2	10640.607	37.77	14.23	52.00	74.00	-22.00	peak

Remarks:
1.Factor (dB/m) = Antenna Factor (dB/m)+Cable Factor (dB)-Pre-amplifier Factor
2.Margin value = Level -Limit value

Ant. No.	Ant 1 + Ant 2
Ant. Pol.	Horizontal
Test Mode:	TX 802.11ax(HE20) Mode 5260MHz (U-NII-2A) 242/61
Remark:	No report for the emission which more than 20 dB below the prescribed limit.

No.	Frequency (MHz)	Reading (dBuV)	Factor (dB/m)	Level (dBuV/m)	Limit (dBuV/m)	Margin (dB)	Detector
1 *	10519.713	22.78	14.06	36.84	54.00	-17.16	AVG
2	10519.845	38.51	14.06	52.57	74.00	-21.43	peak

Remarks:
1.Factor (dB/m) = Antenna Factor (dB/m)+Cable Factor (dB)-Pre-amplifier Factor
2.Margin value = Level -Limit value

Ant. No.	Ant 1 + Ant 2
Ant. Pol.	Vertical
Test Mode:	TX 802.11ax(HE20) Mode 5260MHz (U-NII-2A) 242/61
Remark:	No report for the emission which more than 20 dB below the prescribed limit.

No.	Frequency (MHz)	Reading (dBuV)	Factor (dB/m)	Level (dBuV/m)	Limit (dBuV/m)	Margin (dB)	Detector
1	10520.778	38.37	14.06	52.43	74.00	-21.57	peak
2 *	10520.977	22.77	14.06	36.83	54.00	-17.17	AVG

Remarks:
1.Factor (dB/m) = Antenna Factor (dB/m)+Cable Factor (dB)-Pre-amplifier Factor
2.Margin value = Level -Limit value

Ant. No.	Ant 1 + Ant 2
Ant. Pol.	Horizontal
Test Mode:	TX 802.11ax(HE20) Mode 5280MHz (U-NII-2A) 242/61
Remark:	No report for the emission which more than 20 dB below the prescribed limit.

No.	Frequency (MHz)	Reading (dBuV)	Factor (dB/m)	Level (dBuV/m)	Limit (dBuV/m)	Margin (dB)	Detector
1 *	10559.899	23.33	14.10	37.43	54.00	-16.57	AVG
2	10560.953	37.96	14.10	52.06	74.00	-21.94	peak

Remarks:
1.Factor (dB/m) = Antenna Factor (dB/m)+Cable Factor (dB)-Pre-amplifier Factor
2.Margin value = Level -Limit value

Ant. No.	Ant 1 + Ant 2
Ant. Pol.	Vertical
Test Mode:	TX 802.11ax(HE20) Mode 5280MHz (U-NII-2A) 242/61
Remark:	No report for the emission which more than 20 dB below the prescribed limit.

No.	Frequency (MHz)	Reading (dBuV)	Factor (dB/m)	Level (dBuV/m)	Limit (dBuV/m)	Margin (dB)	Detector
1 *	10559.405	23.39	14.10	37.49	54.00	-16.51	AVG
2	10560.818	38.39	14.10	52.49	74.00	-21.51	peak

Remarks:
1.Factor (dB/m) = Antenna Factor (dB/m)+Cable Factor (dB)-Pre-amplifier Factor
2.Margin value = Level -Limit value

Ant. No.	Ant 1 + Ant 2
Ant. Pol.	Horizontal
Test Mode:	TX 802.11ax(HE20) Mode 5320MHz (U-NII-2A) 242/61
Remark:	No report for the emission which more than 20 dB below the prescribed limit.

No.	Frequency (MHz)	Reading (dBuV)	Factor (dB/m)	Level (dBuV/m)	Limit (dBuV/m)	Margin (dB)	Detector
1 *	10639.100	23.44	14.23	37.67	54.00	-16.33	AVG
2	10640.397	38.65	14.23	52.88	74.00	-21.12	peak

Remarks:
1.Factor (dB/m) = Antenna Factor (dB/m)+Cable Factor (dB)-Pre-amplifier Factor
2.Margin value = Level -Limit value

Ant. No.	Ant 1 + Ant 2
Ant. Pol.	Vertical
Test Mode:	TX 802.11ax(HE20) Mode 5320MHz (U-NII-2A) 242/61
Remark:	No report for the emission which more than 20 dB below the prescribed limit.

No.	Frequency (MHz)	Reading (dBuV)	Factor (dB/m)	Level (dBuV/m)	Limit (dBuV/m)	Margin (dB)	Detector
1	10640.380	38.15	14.23	52.38	74.00	-21.62	peak
2 *	10640.682	23.30	14.23	37.53	54.00	-16.47	AVG

Remarks:
1.Factor (dB/m) = Antenna Factor (dB/m)+Cable Factor (dB)-Pre-amplifier Factor
2.Margin value = Level -Limit value

Ant. No.	Ant 1 + Ant 2
Ant. Pol.	Horizontal
Test Mode:	TX 802.11n(HT40) Mode 5270MHz (U-NII-2A)
Remark:	No report for the emission which more than 20 dB below the prescribed limit.

No.	Frequency (MHz)	Reading (dBuV)	Factor (dB/m)	Level (dBuV/m)	Limit (dBuV/m)	Margin (dB)	Detector
1 *	10540.095	23.53	14.08	37.61	54.00	-16.39	AVG
2	10540.427	38.26	14.08	52.34	74.00	-21.66	peak

Remarks:
1.Factor (dB/m) = Antenna Factor (dB/m)+Cable Factor (dB)-Pre-amplifier Factor
2.Margin value = Level -Limit value

Ant. No.	Ant 1 + Ant 2
Ant. Pol.	Vertical
Test Mode:	TX 802.11n(HT40) Mode 5270MHz (U-NII-2A)
Remark:	No report for the emission which more than 20 dB below the prescribed limit.

No.	Frequency (MHz)	Reading (dBuV)	Factor (dB/m)	Level (dBuV/m)	Limit (dBuV/m)	Margin (dB)	Detector
1 *	10539.243	27.27	14.08	41.35	54.00	-12.65	AVG
2	10540.433	40.09	14.08	54.17	74.00	-19.83	peak

Remarks:
1.Factor (dB/m) = Antenna Factor (dB/m)+Cable Factor (dB)-Pre-amplifier Factor
2.Margin value = Level -Limit value

Ant. No.	Ant 1 + Ant 2
Ant. Pol.	Horizontal
Test Mode:	TX 802.11n(HT40) Mode 5310MHz (U-NII-2A)
Remark:	No report for the emission which more than 20 dB below the prescribed limit.

No.	Frequency (MHz)	Reading (dBuV)	Factor (dB/m)	Level (dBuV/m)	Limit (dBuV/m)	Margin (dB)	Detector
1 *	10620.923	23.43	14.18	37.61	54.00	-16.39	AVG
2	10620.997	38.32	14.18	52.50	74.00	-21.50	peak

Remarks:
1.Factor (dB/m) = Antenna Factor (dB/m)+Cable Factor (dB)-Pre-amplifier Factor
2.Margin value = Level -Limit value

Ant. No.	Ant 1 + Ant 2
Ant. Pol.	Vertical
Test Mode:	TX 802.11n(HT40) Mode 5310MHz (U-NII-2A)
Remark:	No report for the emission which more than 20 dB below the prescribed limit.

No.	Frequency (MHz)	Reading (dBuV)	Factor (dB/m)	Level (dBuV/m)	Limit (dBuV/m)	Margin (dB)	Detector
1	10619.285	40.18	14.18	54.36	74.00	-19.64	peak
2 *	10619.412	28.83	14.18	43.01	54.00	-10.99	AVG

Remarks:
1.Factor (dB/m) = Antenna Factor (dB/m)+Cable Factor (dB)-Pre-amplifier Factor
2.Margin value = Level -Limit value

Ant. No.	Ant 1 + Ant 2
Ant. Pol.	Horizontal
Test Mode:	TX 802.11ac(VHT40) Mode 5270MHz (U-NII-2A)
Remark:	No report for the emission which more than 20 dB below the prescribed limit.

No.	Frequency (MHz)	Reading (dBuV)	Factor (dB/m)	Level (dBuV/m)	Limit (dBuV/m)	Margin (dB)	Detector
1	10540.932	38.24	14.08	52.32	74.00	-21.68	peak
2 *	10540.967	23.36	14.08	37.44	54.00	-16.56	AVG

Remarks:
1.Factor (dB/m) = Antenna Factor (dB/m)+Cable Factor (dB)-Pre-amplifier Factor
2.Margin value = Level -Limit value

Ant. No.	Ant 1 + Ant 2
Ant. Pol.	Vertical
Test Mode:	TX 802.11ac(VHT40) Mode 5270MHz (U-NII-2A)
Remark:	No report for the emission which more than 20 dB below the prescribed limit.

No.	Frequency (MHz)	Reading (dBuV)	Factor (dB/m)	Level (dBuV/m)	Limit (dBuV/m)	Margin (dB)	Detector
1	10540.543	38.70	14.08	52.78	74.00	-21.22	peak
2 *	10540.549	23.33	14.08	37.41	54.00	-16.59	AVG

Remarks:
1.Factor (dB/m) = Antenna Factor (dB/m)+Cable Factor (dB)-Pre-amplifier Factor
2.Margin value = Level -Limit value

Ant. No.	Ant 1 + Ant 2
Ant. Pol.	Horizontal
Test Mode:	TX 802.11ac(VHT40) Mode 5310MHz (U-NII-2A)
Remark:	No report for the emission which more than 20 dB below the prescribed limit.

No.	Frequency (MHz)	Reading (dBuV)	Factor (dB/m)	Level (dBuV/m)	Limit (dBuV/m)	Margin (dB)	Detector
1	10619.527	38.12	14.18	52.30	74.00	-21.70	peak
2 *	10619.952	23.05	14.18	37.23	54.00	-16.77	AVG

Remarks:
1.Factor (dB/m) = Antenna Factor (dB/m)+Cable Factor (dB)-Pre-amplifier Factor
2.Margin value = Level -Limit value

Ant. No.	Ant 1 + Ant 2
Ant. Pol.	Vertical
Test Mode:	TX 802.11ac(VHT40) Mode 5310MHz (U-NII-2A)
Remark:	No report for the emission which more than 20 dB below the prescribed limit.

No.	Frequency (MHz)	Reading (dBuV)	Factor (dB/m)	Level (dBuV/m)	Limit (dBuV/m)	Margin (dB)	Detector
1 *	10620.313	23.05	14.18	37.23	54.00	-16.77	AVG
2	10620.793	38.42	14.18	52.60	74.00	-21.40	peak

Remarks:
1.Factor (dB/m) = Antenna Factor (dB/m)+Cable Factor (dB)-Pre-amplifier Factor
2.Margin value = Level -Limit value

Ant. No.	Ant 1 + Ant 2
Ant. Pol.	Horizontal
Test Mode:	TX 802.11ax(HE40) Mode 5270MHz (U-NII-2A) 484/65
Remark:	No report for the emission which more than 20 dB below the prescribed limit.

No.	Frequency (MHz)	Reading (dBuV)	Factor (dB/m)	Level (dBuV/m)	Limit (dBuV/m)	Margin (dB)	Detector
1 *	10539.028	23.14	14.08	37.22	54.00	-16.78	AVG
2	10540.413	39.21	14.08	53.29	74.00	-20.71	peak

Remarks:
1.Factor (dB/m) = Antenna Factor (dB/m)+Cable Factor (dB)-Pre-amplifier Factor
2.Margin value = Level -Limit value

Ant. No.	Ant 1 + Ant 2
Ant. Pol.	Vertical
Test Mode:	TX 802.11ax(HE40) Mode 5270MHz (U-NII-2A) 484/65
Remark:	No report for the emission which more than 20 dB below the prescribed limit.

No.	Frequency (MHz)	Reading (dBuV)	Factor (dB/m)	Level (dBuV/m)	Limit (dBuV/m)	Margin (dB)	Detector
1	10539.220	38.86	14.08	52.94	74.00	-21.06	peak
2 *	10539.320	23.33	14.08	37.41	54.00	-16.59	AVG

Remarks:
1.Factor (dB/m) = Antenna Factor (dB/m)+Cable Factor (dB)-Pre-amplifier Factor
2.Margin value = Level -Limit value

Ant. No.	Ant 1 + Ant 2
Ant. Pol.	Horizontal
Test Mode:	TX 802.11ax(HE40) Mode 5310MHz (U-NII-2A) 484/65
Remark:	No report for the emission which more than 20 dB below the prescribed limit.

No.	Frequency (MHz)	Reading (dBuV)	Factor (dB/m)	Level (dBuV/m)	Limit (dBuV/m)	Margin (dB)	Detector
1 *	10619.539	23.31	14.18	37.49	54.00	-16.51	AVG
2	10619.697	37.54	14.18	51.72	74.00	-22.28	peak

Remarks:
1.Factor (dB/m) = Antenna Factor (dB/m)+Cable Factor (dB)-Pre-amplifier Factor
2.Margin value = Level -Limit value

Ant. No.	Ant 1 + Ant 2
Ant. Pol.	Vertical
Test Mode:	TX 802.11ax(HE40) Mode 5310MHz (U-NII-2A) 484/65
Remark:	No report for the emission which more than 20 dB below the prescribed limit.

No.	Frequency (MHz)	Reading (dBuV)	Factor (dB/m)	Level (dBuV/m)	Limit (dBuV/m)	Margin (dB)	Detector
1	10619.822	37.92	14.18	52.10	74.00	-21.90	peak
2 *	10620.782	23.17	14.18	37.35	54.00	-16.65	AVG

Remarks:
1.Factor (dB/m) = Antenna Factor (dB/m)+Cable Factor (dB)-Pre-amplifier Factor
2.Margin value = Level -Limit value

Ant. No.	Ant 1 + Ant 2
Ant. Pol.	Horizontal
Test Mode:	TX 802.11ac(VHT80) Mode 5290MHz (U-NII-2A)
Remark:	No report for the emission which more than 20 dB below the prescribed limit.

No.	Frequency (MHz)	Reading (dBuV)	Factor (dB/m)	Level (dBuV/m)	Limit (dBuV/m)	Margin (dB)	Detector
1 *	10579.215	22.34	14.13	36.47	54.00	-17.53	AVG
2	10579.370	37.70	14.13	51.83	74.00	-22.17	peak

Remarks:
1.Factor (dB/m) = Antenna Factor (dB/m)+Cable Factor (dB)-Pre-amplifier Factor
2.Margin value = Level -Limit value

Ant. No.	Ant 1 + Ant 2
Ant. Pol.	Vertical
Test Mode:	TX 802.11ac(VHT80) Mode 5290MHz (U-NII-2A)
Remark:	No report for the emission which more than 20 dB below the prescribed limit.

No.	Frequency (MHz)	Reading (dBuV)	Factor (dB/m)	Level (dBuV/m)	Limit (dBuV/m)	Margin (dB)	Detector
1 *	10579.968	22.53	14.13	36.66	54.00	-17.34	AVG
2	10580.014	38.04	14.13	52.17	74.00	-21.83	peak

Remarks:
1.Factor (dB/m) = Antenna Factor (dB/m)+Cable Factor (dB)-Pre-amplifier Factor
2.Margin value = Level -Limit value

Ant. No.	Ant 1 + Ant 2
Ant. Pol.	Horizontal
Test Mode:	TX 802.11ax(HE80) Mode 5290MHz (U-NII-2A) 996/67
Remark:	No report for the emission which more than 20 dB below the prescribed limit.

No.	Frequency (MHz)	Reading (dBuV)	Factor (dB/m)	Level (dBuV/m)	Limit (dBuV/m)	Margin (dB)	Detector
1	10580.000	37.68	14.13	51.81	74.00	-22.19	peak
2 *	10580.000	22.23	14.13	36.36	54.00	-17.64	AVG

Remarks:
1.Factor (dB/m) = Antenna Factor (dB/m)+Cable Factor (dB)-Pre-amplifier Factor
2.Margin value = Level -Limit value

Ant. No.	Ant 1 + Ant 2
Ant. Pol.	Vertical
Test Mode:	TX 802.11ax(HE80) Mode 5290MHz (U-NII-2A) 996/67
Remark:	No report for the emission which more than 20 dB below the prescribed limit.

No.	Frequency (MHz)	Reading (dBuV)	Factor (dB/m)	Level (dBuV/m)	Limit (dBuV/m)	Margin (dB)	Detector
1	10579.075	37.21	14.13	51.34	74.00	-22.66	peak
2 *	10579.785	22.45	14.13	36.58	54.00	-17.42	AVG

Remarks:
1.Factor (dB/m) = Antenna Factor (dB/m)+Cable Factor (dB)-Pre-amplifier Factor
2.Margin value = Level -Limit value

Ant. No.	Ant 1
Ant. Pol.	Horizontal
Test Mode:	TX 802.11a Mode 5500MHz (U-NII-2C)
Remark:	No report for the emission which more than 20 dB below the prescribed limit.

No.	Frequency (MHz)	Reading (dBuV)	Factor (dB/m)	Level (dBuV/m)	Limit (dBuV/m)	Margin (dB)	Detector
1	10999.716	33.70	14.77	48.47	74.00	-25.53	peak
2 *	10999.936	17.02	14.77	31.79	54.00	-22.21	AVG

Remarks:
1.Factor (dB/m) = Antenna Factor (dB/m)+Cable Factor (dB)-Pre-amplifier Factor
2.Margin value = Level -Limit value

Ant. No.	Ant 1
Ant. Pol.	Vertical
Test Mode:	TX 802.11a Mode 5500MHz (U-NII-2C)
Remark:	No report for the emission which more than 20 dB below the prescribed limit.

No.	Frequency (MHz)	Reading (dBuV)	Factor (dB/m)	Level (dBuV/m)	Limit (dBuV/m)	Margin (dB)	Detector
1 *	11000.491	23.66	14.77	38.43	54.00	-15.57	AVG
2	11000.507	40.22	14.77	54.99	74.00	-19.01	peak

Remarks:
1.Factor (dB/m) = Antenna Factor (dB/m)+Cable Factor (dB)-Pre-amplifier Factor
2.Margin value = Level -Limit value

Ant. No.	Ant 1
Ant. Pol.	Horizontal
Test Mode:	TX 802.11a Mode 5580MHz (U-NII-2C)
Remark:	No report for the emission which more than 20 dB below the prescribed limit.

No.	Frequency (MHz)	Reading (dBuV)	Factor (dB/m)	Level (dBuV/m)	Limit (dBuV/m)	Margin (dB)	Detector
1	11159.184	34.53	14.86	49.39	74.00	-24.61	peak
2 *	11160.203	17.97	14.86	32.83	54.00	-21.17	AVG

Remarks:
1.Factor (dB/m) = Antenna Factor (dB/m)+Cable Factor (dB)-Pre-amplifier Factor
2.Margin value = Level -Limit value

Ant. No.	Ant 1
Ant. Pol.	Vertical
Test Mode:	TX 802.11a Mode 5580MHz (U-NII-2C)
Remark:	No report for the emission which more than 20 dB below the prescribed limit.

No.	Frequency (MHz)	Reading (dBuV)	Factor (dB/m)	Level (dBuV/m)	Limit (dBuV/m)	Margin (dB)	Detector
1	11159.429	40.39	14.86	55.25	74.00	-18.75	peak
2 *	11160.141	25.39	14.86	40.25	54.00	-13.75	AVG

Remarks:
1.Factor (dB/m) = Antenna Factor (dB/m)+Cable Factor (dB)-Pre-amplifier Factor
2.Margin value = Level -Limit value

Ant. No.	Ant 1
Ant. Pol.	Horizontal
Test Mode:	TX 802.11a Mode 5700MHz (U-NII-2C)
Remark:	No report for the emission which more than 20 dB below the prescribed limit.

No.	Frequency (MHz)	Reading (dBuV)	Factor (dB/m)	Level (dBuV/m)	Limit (dBuV/m)	Margin (dB)	Detector
1	11399.246	34.77	14.99	49.76	74.00	-24.24	peak
2 *	11399.839	16.65	14.99	31.64	54.00	-22.36	AVG

Remarks:
1.Factor (dB/m) = Antenna Factor (dB/m)+Cable Factor (dB)-Pre-amplifier Factor
2.Margin value = Level -Limit value

Ant. No.	Ant 1
Ant. Pol.	Vertical
Test Mode:	TX 802.11a Mode 5700MHz (U-NII-2C)
Remark:	No report for the emission which more than 20 dB below the prescribed limit.

No.	Frequency (MHz)	Reading (dBuV)	Factor (dB/m)	Level (dBuV/m)	Limit (dBuV/m)	Margin (dB)	Detector
1	11400.233	41.20	14.99	56.19	74.00	-17.81	peak
2 *	11400.723	27.98	14.99	42.97	54.00	-11.03	AVG

Remarks:
1.Factor (dB/m) = Antenna Factor (dB/m)+Cable Factor (dB)-Pre-amplifier Factor
2.Margin value = Level -Limit value

Ant. No.	Ant 1 + Ant 2
Ant. Pol.	Horizontal
Test Mode:	TX 802.11n(HT20) Mode 5500MHz (U-NII-2C)
Remark:	No report for the emission which more than 20 dB below the prescribed limit.

No.	Frequency (MHz)	Reading (dBuV)	Factor (dB/m)	Level (dBuV/m)	Limit (dBuV/m)	Margin (dB)	Detector
1 *	11000.343	22.61	14.77	37.38	54.00	-16.62	AVG
2	11000.693	37.37	14.77	52.14	74.00	-21.86	peak

Remarks:
1.Factor (dB/m) = Antenna Factor (dB/m)+Cable Factor (dB)-Pre-amplifier Factor
2.Margin value = Level -Limit value

Ant. No.	Ant 1 + Ant 2
Ant. Pol.	Vertical
Test Mode:	TX 802.11n(HT20) Mode 5500MHz (U-NII-2C)
Remark:	No report for the emission which more than 20 dB below the prescribed limit.

No.	Frequency (MHz)	Reading (dBuV)	Factor (dB/m)	Level (dBuV/m)	Limit (dBuV/m)	Margin (dB)	Detector
1 *	11000.695	29.15	14.77	43.92	54.00	-10.08	AVG
2	11000.811	42.38	14.77	57.15	74.00	-16.85	peak

Remarks:
1.Factor (dB/m) = Antenna Factor (dB/m)+Cable Factor (dB)-Pre-amplifier Factor
2.Margin value = Level -Limit value

Ant. No.	Ant 1 + Ant 2
Ant. Pol.	Horizontal
Test Mode:	TX 802.11n(HT20) Mode 5580MHz (U-NII-2C)
Remark:	No report for the emission which more than 20 dB below the prescribed limit.

No.	Frequency (MHz)	Reading (dBuV)	Factor (dB/m)	Level (dBuV/m)	Limit (dBuV/m)	Margin (dB)	Detector
1 *	11159.531	23.69	14.86	38.55	54.00	-15.45	AVG
2	11160.194	39.15	14.86	54.01	74.00	-19.99	peak

Remarks:
1.Factor (dB/m) = Antenna Factor (dB/m)+Cable Factor (dB)-Pre-amplifier Factor
2.Margin value = Level -Limit value

Ant. No.	Ant 1 + Ant 2
Ant. Pol.	Vertical
Test Mode:	TX 802.11n(HT20) Mode 5580MHz (U-NII-2C)
Remark:	No report for the emission which more than 20 dB below the prescribed limit.

No.	Frequency (MHz)	Reading (dBuV)	Factor (dB/m)	Level (dBuV/m)	Limit (dBuV/m)	Margin (dB)	Detector
1	11159.110	40.40	14.86	55.26	74.00	-18.74	peak
2 *	11159.908	25.92	14.86	40.78	54.00	-13.22	AVG

Remarks:
1.Factor (dB/m) = Antenna Factor (dB/m)+Cable Factor (dB)-Pre-amplifier Factor
2.Margin value = Level -Limit value

Ant. No.	Ant 1 + Ant 2
Ant. Pol.	Horizontal
Test Mode:	TX 802.11n(HT20) Mode 5700MHz (U-NII-2C)
Remark:	No report for the emission which more than 20 dB below the prescribed limit.

No.	Frequency (MHz)	Reading (dBuV)	Factor (dB/m)	Level (dBuV/m)	Limit (dBuV/m)	Margin (dB)	Detector
1	11399.760	37.29	14.99	52.28	74.00	-21.72	peak
2 *	11400.026	22.73	14.99	37.72	54.00	-16.28	AVG

Remarks:
1.Factor (dB/m) = Antenna Factor (dB/m)+Cable Factor (dB)-Pre-amplifier Factor
2.Margin value = Level -Limit value

Ant. No.	Ant 1 + Ant 2
Ant. Pol.	Vertical
Test Mode:	TX 802.11n(HT20) Mode 5700MHz (U-NII-2C)
Remark:	No report for the emission which more than 20 dB below the prescribed limit.

No.	Frequency (MHz)	Reading (dBuV)	Factor (dB/m)	Level (dBuV/m)	Limit (dBuV/m)	Margin (dB)	Detector
1	11399.057	38.60	14.99	53.59	74.00	-20.41	peak
2 *	11400.197	24.64	14.99	39.63	54.00	-14.37	AVG

Remarks:
1.Factor (dB/m) = Antenna Factor (dB/m)+Cable Factor (dB)-Pre-amplifier Factor
2.Margin value = Level -Limit value

Ant. No.	Ant 1 + Ant 2
Ant. Pol.	Horizontal
Test Mode:	TX 802.11ac(VHT20) Mode 5500MHz (U-NII-2C)
Remark:	No report for the emission which more than 20 dB below the prescribed limit.

No.	Frequency (MHz)	Reading (dBuV)	Factor (dB/m)	Level (dBuV/m)	Limit (dBuV/m)	Margin (dB)	Detector
1 *	10999.383	22.48	14.77	37.25	54.00	-16.75	AVG
2	11000.751	39.32	14.77	54.09	74.00	-19.91	peak

Remarks:
1.Factor (dB/m) = Antenna Factor (dB/m)+Cable Factor (dB)-Pre-amplifier Factor
2.Margin value = Level -Limit value

Ant. No.	Ant 1 + Ant 2
Ant. Pol.	Vertical
Test Mode:	TX 802.11ac(VHT20) Mode 5500MHz (U-NII-2C)
Remark:	No report for the emission which more than 20 dB below the prescribed limit.

No.	Frequency (MHz)	Reading (dBuV)	Factor (dB/m)	Level (dBuV/m)	Limit (dBuV/m)	Margin (dB)	Detector
1	10999.026	38.51	14.77	53.28	74.00	-20.72	peak
2 *	11000.734	22.49	14.77	37.26	54.00	-16.74	AVG

Remarks:
1.Factor (dB/m) = Antenna Factor (dB/m)+Cable Factor (dB)-Pre-amplifier Factor
2.Margin value = Level -Limit value

Ant. No.	Ant 1 + Ant 2
Ant. Pol.	Horizontal
Test Mode:	TX 802.11ac(VHT20) Mode 5580MHz (U-NII-2C)
Remark:	No report for the emission which more than 20 dB below the prescribed limit.

No.	Frequency (MHz)	Reading (dBuV)	Factor (dB/m)	Level (dBuV/m)	Limit (dBuV/m)	Margin (dB)	Detector
1	11159.604	39.04	14.86	53.90	74.00	-20.10	peak
2 *	11160.513	23.67	14.86	38.53	54.00	-15.47	AVG

Remarks:
1.Factor (dB/m) = Antenna Factor (dB/m)+Cable Factor (dB)-Pre-amplifier Factor
2.Margin value = Level -Limit value

Ant. No.	Ant 1 + Ant 2
Ant. Pol.	Vertical
Test Mode:	TX 802.11ac(VHT20) Mode 5580MHz (U-NII-2C)
Remark:	No report for the emission which more than 20 dB below the prescribed limit.

No.	Frequency (MHz)	Reading (dBuV)	Factor (dB/m)	Level (dBuV/m)	Limit (dBuV/m)	Margin (dB)	Detector
1	11159.355	38.92	14.86	53.78	74.00	-20.22	peak
2 *	11159.720	23.84	14.86	38.70	54.00	-15.30	AVG

Remarks:
1.Factor (dB/m) = Antenna Factor (dB/m)+Cable Factor (dB)-Pre-amplifier Factor
2.Margin value = Level -Limit value

Ant. No.	Ant 1 + Ant 2
Ant. Pol.	Horizontal
Test Mode:	TX 802.11ac(VHT20) Mode 5700MHz (U-NII-2C)
Remark:	No report for the emission which more than 20 dB below the prescribed limit.

No.	Frequency (MHz)	Reading (dBuV)	Factor (dB/m)	Level (dBuV/m)	Limit (dBuV/m)	Margin (dB)	Detector
1 *	11399.345	22.55	14.99	37.54	54.00	-16.46	AVG
2	11400.157	38.36	14.99	53.35	74.00	-20.65	peak

Remarks:
1.Factor (dB/m) = Antenna Factor (dB/m)+Cable Factor (dB)-Pre-amplifier Factor
2.Margin value = Level -Limit value

Ant. No.	Ant 1 + Ant 2
Ant. Pol.	Vertical
Test Mode:	TX 802.11ac(VHT20) Mode 5700MHz (U-NII-2C)
Remark:	No report for the emission which more than 20 dB below the prescribed limit.

No.	Frequency (MHz)	Reading (dBuV)	Factor (dB/m)	Level (dBuV/m)	Limit (dBuV/m)	Margin (dB)	Detector
1	11400.316	37.07	14.99	52.06	74.00	-21.94	peak
2 *	11400.977	22.37	14.99	37.36	54.00	-16.64	AVG

Remarks:
1.Factor (dB/m) = Antenna Factor (dB/m)+Cable Factor (dB)-Pre-amplifier Factor
2.Margin value = Level -Limit value

Ant. No.	Ant 1 + Ant 2
Ant. Pol.	Horizontal
Test Mode:	TX 802.11ax(HE20) Mode 5500MHz (U-NII-2C) 242/61
Remark:	No report for the emission which more than 20 dB below the prescribed limit.

No.	Frequency (MHz)	Reading (dBuV)	Factor (dB/m)	Level (dBuV/m)	Limit (dBuV/m)	Margin (dB)	Detector
1 *	10999.409	22.47	14.77	37.24	54.00	-16.76	AVG
2	10999.714	38.61	14.77	53.38	74.00	-20.62	peak

Remarks:
1.Factor (dB/m) = Antenna Factor (dB/m)+Cable Factor (dB)-Pre-amplifier Factor
2.Margin value = Level -Limit value

Ant. No.	Ant 1 + Ant 2
Ant. Pol.	Vertical
Test Mode:	TX 802.11ax(HE20) Mode 5500MHz (U-NII-2C) 242/61
Remark:	No report for the emission which more than 20 dB below the prescribed limit.

No.	Frequency (MHz)	Reading (dBuV)	Factor (dB/m)	Level (dBuV/m)	Limit (dBuV/m)	Margin (dB)	Detector
1 *	11000.391	22.84	14.77	37.61	54.00	-16.39	AVG
2	11000.891	37.63	14.77	52.40	74.00	-21.60	peak

Remarks:
1.Factor (dB/m) = Antenna Factor (dB/m)+Cable Factor (dB)-Pre-amplifier Factor
2.Margin value = Level -Limit value

Ant. No.	Ant 1 + Ant 2
Ant. Pol.	Horizontal
Test Mode:	TX 802.11ax(HE20) Mode 5580MHz (U-NII-2C) 242/61
Remark:	No report for the emission which more than 20 dB below the prescribed limit.

No.	Frequency (MHz)	Reading (dBuV)	Factor (dB/m)	Level (dBuV/m)	Limit (dBuV/m)	Margin (dB)	Detector
1	11159.955	38.25	14.86	53.11	74.00	-20.89	peak
2 *	11160.663	23.59	14.86	38.45	54.00	-15.55	AVG

Remarks:
1.Factor (dB/m) = Antenna Factor (dB/m)+Cable Factor (dB)-Pre-amplifier Factor
2.Margin value = Level -Limit value

Ant. No.	Ant 1 + Ant 2
Ant. Pol.	Vertical
Test Mode:	TX 802.11ax(HE20) Mode 5580MHz (U-NII-2C) 242/61
Remark:	No report for the emission which more than 20 dB below the prescribed limit.

No.	Frequency (MHz)	Reading (dBuV)	Factor (dB/m)	Level (dBuV/m)	Limit (dBuV/m)	Margin (dB)	Detector
1	11159.829	38.31	14.86	53.17	74.00	-20.83	peak
2 *	11160.031	23.91	14.86	38.77	54.00	-15.23	AVG

Remarks:
1.Factor (dB/m) = Antenna Factor (dB/m)+Cable Factor (dB)-Pre-amplifier Factor
2.Margin value = Level -Limit value

Ant. No.	Ant 1 + Ant 2
Ant. Pol.	Horizontal
Test Mode:	TX 802.11ax(HE20) Mode 5700MHz (U-NII-2C) 242/61
Remark:	No report for the emission which more than 20 dB below the prescribed limit.

No.	Frequency (MHz)	Reading (dBuV)	Factor (dB/m)	Level (dBuV/m)	Limit (dBuV/m)	Margin (dB)	Detector
1	11400.867	36.81	14.99	51.80	74.00	-22.20	peak
2 *	11400.951	22.62	14.99	37.61	54.00	-16.39	AVG

Remarks:
1.Factor (dB/m) = Antenna Factor (dB/m)+Cable Factor (dB)-Pre-amplifier Factor
2.Margin value = Level -Limit value

Ant. No.	Ant 1 + Ant 2
Ant. Pol.	Vertical
Test Mode:	TX 802.11ax(HE20) Mode 5700MHz (U-NII-2C) 242/61
Remark:	No report for the emission which more than 20 dB below the prescribed limit.

No.	Frequency (MHz)	Reading (dBuV)	Factor (dB/m)	Level (dBuV/m)	Limit (dBuV/m)	Margin (dB)	Detector
1	11399.720	38.17	14.99	53.16	74.00	-20.84	peak
2 *	11400.838	22.64	14.99	37.63	54.00	-16.37	AVG

Remarks:
1.Factor (dB/m) = Antenna Factor (dB/m)+Cable Factor (dB)-Pre-amplifier Factor
2.Margin value = Level -Limit value

Ant. No.	Ant 1 + Ant 2
Ant. Pol.	Horizontal
Test Mode:	TX 802.11n(HT40) Mode 5510MHz (U-NII-2C)
Remark:	No report for the emission which more than 20 dB below the prescribed limit.

No.	Frequency (MHz)	Reading (dBuV)	Factor (dB/m)	Level (dBuV/m)	Limit (dBuV/m)	Margin (dB)	Detector
1 *	11019.629	23.10	14.78	37.88	54.00	-16.12	AVG
2	11020.965	37.49	14.78	52.27	74.00	-21.73	peak

Remarks:
1.Factor (dB/m) = Antenna Factor (dB/m)+Cable Factor (dB)-Pre-amplifier Factor
2.Margin value = Level -Limit value

Ant. No.	Ant 1 + Ant 2
Ant. Pol.	Vertical
Test Mode:	TX 802.11n(HT40) Mode 5510MHz (U-NII-2C)
Remark:	No report for the emission which more than 20 dB below the prescribed limit.

No.	Frequency (MHz)	Reading (dBuV)	Factor (dB/m)	Level (dBuV/m)	Limit (dBuV/m)	Margin (dB)	Detector
1 *	11019.678	26.24	14.78	41.02	54.00	-12.98	AVG
2	11020.946	40.12	14.78	54.90	74.00	-19.10	peak

Remarks:
1.Factor (dB/m) = Antenna Factor (dB/m)+Cable Factor (dB)-Pre-amplifier Factor
2.Margin value = Level -Limit value

Ant. No.	Ant 1 + Ant 2
Ant. Pol.	Horizontal
Test Mode:	TX 802.11n(HT40) Mode 5550MHz (U-NII-2C)
Remark:	No report for the emission which more than 20 dB below the prescribed limit.

No.	Frequency (MHz)	Reading (dBuV)	Factor (dB/m)	Level (dBuV/m)	Limit (dBuV/m)	Margin (dB)	Detector
1	11019.112	38.05	14.78	52.83	74.00	-21.17	peak
2 *	11019.843	22.96	14.78	37.74	54.00	-16.26	AVG

Remarks:
1.Factor (dB/m) = Antenna Factor (dB/m)+Cable Factor (dB)-Pre-amplifier Factor
2.Margin value = Level -Limit value

Ant. No.	Ant 1 + Ant 2
Ant. Pol.	Vertical
Test Mode:	TX 802.11n(HT40) Mode 5550MHz (U-NII-2C)
Remark:	No report for the emission which more than 20 dB below the prescribed limit.

No.	Frequency (MHz)	Reading (dBuV)	Factor (dB/m)	Level (dBuV/m)	Limit (dBuV/m)	Margin (dB)	Detector
1 *	11099.183	25.67	14.83	40.50	54.00	-13.50	AVG
2	11100.503	39.82	14.83	54.65	74.00	-19.35	peak

Remarks:
1.Factor (dB/m) = Antenna Factor (dB/m)+Cable Factor (dB)-Pre-amplifier Factor
2.Margin value = Level -Limit value

Ant. No.	Ant 1 + Ant 2
Ant. Pol.	Horizontal
Test Mode:	TX 802.11n(HT40) Mode 5670MHz (U-NII-2C)
Remark:	No report for the emission which more than 20 dB below the prescribed limit.

No.	Frequency (MHz)	Reading (dBuV)	Factor (dB/m)	Level (dBuV/m)	Limit (dBuV/m)	Margin (dB)	Detector
1	11339.731	38.52	14.96	53.48	74.00	-20.52	peak
2 *	11340.996	22.83	14.96	37.79	54.00	-16.21	AVG

Remarks:
1.Factor (dB/m) = Antenna Factor (dB/m)+Cable Factor (dB)-Pre-amplifier Factor
2.Margin value = Level -Limit value

Ant. No.	Ant 1 + Ant 2
Ant. Pol.	Vertical
Test Mode:	TX 802.11n(HT40) Mode 5670MHz (U-NII-2C)
Remark:	No report for the emission which more than 20 dB below the prescribed limit.

No.	Frequency (MHz)	Reading (dBuV)	Factor (dB/m)	Level (dBuV/m)	Limit (dBuV/m)	Margin (dB)	Detector
1	11339.401	38.90	14.96	53.86	74.00	-20.14	peak
2 *	11340.550	24.39	14.96	39.35	54.00	-14.65	AVG

Remarks:
1.Factor (dB/m) = Antenna Factor (dB/m)+Cable Factor (dB)-Pre-amplifier Factor
2.Margin value = Level -Limit value

Ant. No.	Ant 1 + Ant 2
Ant. Pol.	Horizontal
Test Mode:	TX 802.11ac(VHT40) Mode 5510MHz (U-NII-2C)
Remark:	No report for the emission which more than 20 dB below the prescribed limit.

No.	Frequency (MHz)	Reading (dBuV)	Factor (dB/m)	Level (dBuV/m)	Limit (dBuV/m)	Margin (dB)	Detector
1 *	11019.464	22.97	14.78	37.75	54.00	-16.25	AVG
2	11020.045	37.84	14.78	52.62	74.00	-21.38	peak

Remarks:
1.Factor (dB/m) = Antenna Factor (dB/m)+Cable Factor (dB)-Pre-amplifier Factor
2.Margin value = Level -Limit value

Ant. No.	Ant 1 + Ant 2
Ant. Pol.	Vertical
Test Mode:	TX 802.11ac(VHT40) Mode 5510MHz (U-NII-2C)
Remark:	No report for the emission which more than 20 dB below the prescribed limit.

No.	Frequency (MHz)	Reading (dBuV)	Factor (dB/m)	Level (dBuV/m)	Limit (dBuV/m)	Margin (dB)	Detector
1	11019.892	38.13	14.78	52.91	74.00	-21.09	peak
2 *	11020.586	22.97	14.78	37.75	54.00	-16.25	AVG

Remarks:
1.Factor (dB/m) = Antenna Factor (dB/m)+Cable Factor (dB)-Pre-amplifier Factor
2.Margin value = Level -Limit value

Ant. No.	Ant 1 + Ant 2
Ant. Pol.	Horizontal
Test Mode:	TX 802.11ac(VHT40) Mode 5550MHz (U-NII-2C)
Remark:	No report for the emission which more than 20 dB below the prescribed limit.

No.	Frequency (MHz)	Reading (dBuV)	Factor (dB/m)	Level (dBuV/m)	Limit (dBuV/m)	Margin (dB)	Detector
1	11099.021	38.77	14.83	53.60	74.00	-20.40	peak
2 *	11099.809	22.94	14.83	37.77	54.00	-16.23	AVG

Remarks:
1.Factor (dB/m) = Antenna Factor (dB/m)+Cable Factor (dB)-Pre-amplifier Factor
2.Margin value = Level -Limit value

Ant. No.	Ant 1 + Ant 2
Ant. Pol.	Vertical
Test Mode:	TX 802.11ac(VHT40) Mode 5550MHz (U-NII-2C)
Remark:	No report for the emission which more than 20 dB below the prescribed limit.

No.	Frequency (MHz)	Reading (dBuV)	Factor (dB/m)	Level (dBuV/m)	Limit (dBuV/m)	Margin (dB)	Detector
1	11099.549	37.51	14.83	52.34	74.00	-21.66	peak
2 *	11100.794	23.14	14.83	37.97	54.00	-16.03	AVG

Remarks:
1.Factor (dB/m) = Antenna Factor (dB/m)+Cable Factor (dB)-Pre-amplifier Factor
2.Margin value = Level -Limit value

Ant. No.	Ant 1 + Ant 2
Ant. Pol.	Horizontal
Test Mode:	TX 802.11ac(VHT40) Mode 5670MHz (U-NII-2C)
Remark:	No report for the emission which more than 20 dB below the prescribed limit.

No.	Frequency (MHz)	Reading (dBuV)	Factor (dB/m)	Level (dBuV/m)	Limit (dBuV/m)	Margin (dB)	Detector
1 *	11340.171	22.29	14.96	37.25	54.00	-16.75	AVG
2	11340.547	37.42	14.96	52.38	74.00	-21.62	peak

Remarks:
1.Factor (dB/m) = Antenna Factor (dB/m)+Cable Factor (dB)-Pre-amplifier Factor
2.Margin value = Level -Limit value

Ant. No.	Ant 1 + Ant 2
Ant. Pol.	Vertical
Test Mode:	TX 802.11ac(VHT40) Mode 5670MHz (U-NII-2C)
Remark:	No report for the emission which more than 20 dB below the prescribed limit.

No.	Frequency (MHz)	Reading (dBuV)	Factor (dB/m)	Level (dBuV/m)	Limit (dBuV/m)	Margin (dB)	Detector
1	11339.103	37.91	14.96	52.87	74.00	-21.13	peak
2 *	11340.346	22.59	14.96	37.55	54.00	-16.45	AVG

Remarks:
1.Factor (dB/m) = Antenna Factor (dB/m)+Cable Factor (dB)-Pre-amplifier Factor
2.Margin value = Level -Limit value

Ant. No.	Ant 1 + Ant 2
Ant. Pol.	Horizontal
Test Mode:	TX 802.11ax(HE40) Mode 5510MHz (U-NII-2C) 484/65
Remark:	No report for the emission which more than 20 dB below the prescribed limit.

No.	Frequency (MHz)	Reading (dBuV)	Factor (dB/m)	Level (dBuV/m)	Limit (dBuV/m)	Margin (dB)	Detector
1	11019.294	36.97	14.78	51.75	74.00	-22.25	peak
2 *	11020.163	22.82	14.78	37.60	54.00	-16.40	AVG

Remarks:
1.Factor (dB/m) = Antenna Factor (dB/m)+Cable Factor (dB)-Pre-amplifier Factor
2.Margin value = Level -Limit value

Ant. No.	Ant 1 + Ant 2
Ant. Pol.	Vertical
Test Mode:	TX 802.11ax(HE40) Mode 5510MHz (U-NII-2C) 484/65
Remark:	No report for the emission which more than 20 dB below the prescribed limit.

No.	Frequency (MHz)	Reading (dBuV)	Factor (dB/m)	Level (dBuV/m)	Limit (dBuV/m)	Margin (dB)	Detector
1	11019.729	37.60	14.78	52.38	74.00	-21.62	peak
2 *	11019.953	23.09	14.78	37.87	54.00	-16.13	AVG

Remarks:
1.Factor (dB/m) = Antenna Factor (dB/m)+Cable Factor (dB)-Pre-amplifier Factor
2.Margin value = Level -Limit value

Ant. No.	Ant 1 + Ant 2
Ant. Pol.	Horizontal
Test Mode:	TX 802.11ax(HE40) Mode 5550MHz (U-NII-2C) 484/65
Remark:	No report for the emission which more than 20 dB below the prescribed limit.

No.	Frequency (MHz)	Reading (dBuV)	Factor (dB/m)	Level (dBuV/m)	Limit (dBuV/m)	Margin (dB)	Detector
1	11099.703	37.80	14.83	52.63	74.00	-21.37	peak
2 *	11099.808	22.76	14.83	37.59	54.00	-16.41	AVG

Remarks:
1.Factor (dB/m) = Antenna Factor (dB/m)+Cable Factor (dB)-Pre-amplifier Factor
2.Margin value = Level -Limit value

Ant. No.	Ant 1 + Ant 2
Ant. Pol.	Vertical
Test Mode:	TX 802.11ax(HE40) Mode 5550MHz (U-NII-2C) 484/65
Remark:	No report for the emission which more than 20 dB below the prescribed limit.

No.	Frequency (MHz)	Reading (dBuV)	Factor (dB/m)	Level (dBuV/m)	Limit (dBuV/m)	Margin (dB)	Detector
1	11099.144	38.38	14.83	53.21	74.00	-20.79	peak
2 *	11100.819	23.35	14.83	38.18	54.00	-15.82	AVG

Remarks:
1.Factor (dB/m) = Antenna Factor (dB/m)+Cable Factor (dB)-Pre-amplifier Factor
2.Margin value = Level -Limit value

Ant. No.	Ant 1 + Ant 2
Ant. Pol.	Horizontal
Test Mode:	TX 802.11ax(HE40) Mode 5670MHz (U-NII-2C) 484/65
Remark:	No report for the emission which more than 20 dB below the prescribed limit.

No.	Frequency (MHz)	Reading (dBuV)	Factor (dB/m)	Level (dBuV/m)	Limit (dBuV/m)	Margin (dB)	Detector
1	11339.591	37.74	14.96	52.70	74.00	-21.30	peak
2 *	11340.139	22.34	14.96	37.30	54.00	-16.70	AVG

Remarks:
1.Factor (dB/m) = Antenna Factor (dB/m)+Cable Factor (dB)-Pre-amplifier Factor
2.Margin value = Level -Limit value

Ant. No.	Ant 1 + Ant 2
Ant. Pol.	Vertical
Test Mode:	TX 802.11ax(HE40) Mode 5670MHz (U-NII-2C) 484/65
Remark:	No report for the emission which more than 20 dB below the prescribed limit.

No.	Frequency (MHz)	Reading (dBuV)	Factor (dB/m)	Level (dBuV/m)	Limit (dBuV/m)	Margin (dB)	Detector
1	11339.747	38.26	14.96	53.22	74.00	-20.78	peak
2 *	11340.049	22.64	14.96	37.60	54.00	-16.40	AVG

Remarks:
1.Factor (dB/m) = Antenna Factor (dB/m)+Cable Factor (dB)-Pre-amplifier Factor
2.Margin value = Level -Limit value

Ant. No.	Ant 1 + Ant 2
Ant. Pol.	Horizontal
Test Mode:	TX 802.11ac(VHT80) Mode 5530MHz (U-NII-2C)
Remark:	No report for the emission which more than 20 dB below the prescribed limit.

No.	Frequency (MHz)	Reading (dBuV)	Factor (dB/m)	Level (dBuV/m)	Limit (dBuV/m)	Margin (dB)	Detector
1 *	11060.297	22.61	14.81	37.42	54.00	-16.58	AVG
2	11060.824	37.31	14.81	52.12	74.00	-21.88	peak

Remarks:
1.Factor (dB/m) = Antenna Factor (dB/m)+Cable Factor (dB)-Pre-amplifier Factor
2.Margin value = Level -Limit value

Ant. No.	Ant 1 + Ant 2
Ant. Pol.	Vertical
Test Mode:	TX 802.11ac(VHT80) Mode 5530MHz (U-NII-2C)
Remark:	No report for the emission which more than 20 dB below the prescribed limit.

No.	Frequency (MHz)	Reading (dBuV)	Factor (dB/m)	Level (dBuV/m)	Limit (dBuV/m)	Margin (dB)	Detector
1	11059.679	39.15	14.81	53.96	74.00	-20.04	peak
2 *	11060.857	22.68	14.81	37.49	54.00	-16.51	AVG

Remarks:
1.Factor (dB/m) = Antenna Factor (dB/m)+Cable Factor (dB)-Pre-amplifier Factor
2.Margin value = Level -Limit value

Ant. No.	Ant 1 + Ant 2
Ant. Pol.	Horizontal
Test Mode:	TX 802.11ac(VHT80) Mode 5610MHz (U-NII-2C)
Remark:	No report for the emission which more than 20 dB below the prescribed limit.

No.	Frequency (MHz)	Reading (dBuV)	Factor (dB/m)	Level (dBuV/m)	Limit (dBuV/m)	Margin (dB)	Detector
1 *	11219.465	23.42	14.89	38.31	54.00	-15.69	AVG
2	11220.697	36.86	14.89	51.75	74.00	-22.25	peak

Remarks:
1.Factor (dB/m) = Antenna Factor (dB/m)+Cable Factor (dB)-Pre-amplifier Factor
2.Margin value = Level -Limit value

Ant. No.	Ant 1 + Ant 2
Ant. Pol.	Vertical
Test Mode:	TX 802.11ac(VHT80) Mode 5610MHz (U-NII-2C)
Remark:	No report for the emission which more than 20 dB below the prescribed limit.

No.	Frequency (MHz)	Reading (dBuV)	Factor (dB/m)	Level (dBuV/m)	Limit (dBuV/m)	Margin (dB)	Detector
1 *	11220.361	23.26	14.89	38.15	54.00	-15.85	AVG
2	11220.477	38.12	14.89	53.01	74.00	-20.99	peak

Remarks:
1.Factor (dB/m) = Antenna Factor (dB/m)+Cable Factor (dB)-Pre-amplifier Factor
2.Margin value = Level -Limit value

Ant. No.	Ant 1 + Ant 2
Ant. Pol.	Horizontal
Test Mode:	TX 802.11ax(HE80) Mode 5530MHz (U-NII-2C) 996/67
Remark:	No report for the emission which more than 20 dB below the prescribed limit.

No.	Frequency (MHz)	Reading (dBuV)	Factor (dB/m)	Level (dBuV/m)	Limit (dBuV/m)	Margin (dB)	Detector
1	11060.000	36.50	14.81	51.31	74.00	-22.69	peak
2 *	11060.000	22.41	14.81	37.22	54.00	-16.78	AVG

Remarks:
1.Factor (dB/m) = Antenna Factor (dB/m)+Cable Factor (dB)-Pre-amplifier Factor
2.Margin value = Level -Limit value

Ant. No.	Ant 1 + Ant 2
Ant. Pol.	Vertical
Test Mode:	TX 802.11ax(HE80) Mode 5530MHz (U-NII-2C) 996/67
Remark:	No report for the emission which more than 20 dB below the prescribed limit.

No.	Frequency (MHz)	Reading (dBuV)	Factor (dB/m)	Level (dBuV/m)	Limit (dBuV/m)	Margin (dB)	Detector
1	11060.348	38.03	14.81	52.84	74.00	-21.16	peak
2 *	11060.776	22.85	14.81	37.66	54.00	-16.34	AVG

Remarks:
1.Factor (dB/m) = Antenna Factor (dB/m)+Cable Factor (dB)-Pre-amplifier Factor
2.Margin value = Level -Limit value

Ant. No.	Ant 1 + Ant 2
Ant. Pol.	Horizontal
Test Mode:	TX 802.11ax(HE80) Mode 5610MHz (U-NII-2C) 996/67
Remark:	No report for the emission which more than 20 dB below the prescribed limit.

No.	Frequency (MHz)	Reading (dBuV)	Factor (dB/m)	Level (dBuV/m)	Limit (dBuV/m)	Margin (dB)	Detector
1	11220.000	37.92	14.89	52.81	74.00	-21.19	peak
2 *	11220.000	23.02	14.89	37.91	54.00	-16.09	AVG

Remarks:
1.Factor (dB/m) = Antenna Factor (dB/m)+Cable Factor (dB)-Pre-amplifier Factor
2.Margin value = Level -Limit value

Ant. No.	Ant 1 + Ant 2
Ant. Pol.	Vertical
Test Mode:	TX 802.11ax(HE80) Mode 5610MHz (U-NII-2C) 996/67
Remark:	No report for the emission which more than 20 dB below the prescribed limit.

No.	Frequency (MHz)	Reading (dBuV)	Factor (dB/m)	Level (dBuV/m)	Limit (dBuV/m)	Margin (dB)	Detector
1	11219.057	38.05	14.89	52.94	74.00	-21.06	peak
2 *	11220.449	23.57	14.89	38.46	54.00	-15.54	AVG

Remarks:
1.Factor (dB/m) = Antenna Factor (dB/m)+Cable Factor (dB)-Pre-amplifier Factor
2.Margin value = Level -Limit value

Ant. No.	Ant 1
Ant. Pol.	Horizontal
Test Mode:	TX 802.11a Mode 5745MHz (U-NII-3)
Remark:	No report for the emission which more than 20 dB below the prescribed limit.

No.	Frequency (MHz)	Reading (dBuV)	Factor (dB/m)	Level (dBuV/m)	Limit (dBuV/m)	Margin (dB)	Detector
1	11490.436	33.40	15.09	48.49	74.00	-25.51	peak
2 *	11490.992	17.26	15.09	32.35	54.00	-21.65	AVG

Remarks:
1.Factor (dB/m) = Antenna Factor (dB/m)+Cable Factor (dB)-Pre-amplifier Factor
2.Margin value = Level -Limit value

Ant. No.	Ant 1
Ant. Pol.	Vertical
Test Mode:	TX 802.11a Mode 5745MHz (U-NII-3)
Remark:	No report for the emission which more than 20 dB below the prescribed limit.

No.	Frequency (MHz)	Reading (dBuV)	Factor (dB/m)	Level (dBuV/m)	Limit (dBuV/m)	Margin (dB)	Detector
1	11489.229	41.94	15.09	57.03	74.00	-16.97	peak
2 *	11490.440	29.41	15.09	44.50	54.00	-9.50	AVG

Remarks:
1.Factor (dB/m) = Antenna Factor (dB/m)+Cable Factor (dB)-Pre-amplifier Factor
2.Margin value = Level -Limit value

Ant. No.	Ant 1
Ant. Pol.	Horizontal
Test Mode:	TX 802.11a Mode 5785MHz (U-NII-3)
Remark:	No report for the emission which more than 20 dB below the prescribed limit.

No.	Frequency (MHz)	Reading (dBuV)	Factor (dB/m)	Level (dBuV/m)	Limit (dBuV/m)	Margin (dB)	Detector
1	11570.319	34.37	15.23	49.60	74.00	-24.40	peak
2 *	11570.460	17.83	15.23	33.06	54.00	-20.94	AVG

Remarks:
1.Factor (dB/m) = Antenna Factor (dB/m)+Cable Factor (dB)-Pre-amplifier Factor
2.Margin value = Level -Limit value

Ant. No.	Ant 1
Ant. Pol.	Vertical
Test Mode:	TX 802.11a Mode 5785MHz (U-NII-3)
Remark:	No report for the emission which more than 20 dB below the prescribed limit.

No.	Frequency (MHz)	Reading (dBuV)	Factor (dB/m)	Level (dBuV/m)	Limit (dBuV/m)	Margin (dB)	Detector
1	11569.357	44.20	15.23	59.43	74.00	-14.57	peak
2 *	11570.427	32.22	15.23	47.45	54.00	-6.55	AVG

Remarks:
1.Factor (dB/m) = Antenna Factor (dB/m)+Cable Factor (dB)-Pre-amplifier Factor
2.Margin value = Level -Limit value

Ant. No.	Ant 1
Ant. Pol.	Horizontal
Test Mode:	TX 802.11a Mode 5825MHz (U-NII-3)
Remark:	No report for the emission which more than 20 dB below the prescribed limit.

No.	Frequency (MHz)	Reading (dBuV)	Factor (dB/m)	Level (dBuV/m)	Limit (dBuV/m)	Margin (dB)	Detector
1 *	11649.674	17.71	15.28	32.99	54.00	-21.01	AVG
2	11649.695	35.39	15.28	50.67	74.00	-23.33	peak

Remarks:
1.Factor (dB/m) = Antenna Factor (dB/m)+Cable Factor (dB)-Pre-amplifier Factor
2.Margin value = Level -Limit value

Ant. No.	Ant 1
Ant. Pol.	Vertical
Test Mode:	TX 802.11a Mode 5825MHz (U-NII-3)
Remark:	No report for the emission which more than 20 dB below the prescribed limit.

No.	Frequency (MHz)	Reading (dBuV)	Factor (dB/m)	Level (dBuV/m)	Limit (dBuV/m)	Margin (dB)	Detector
1 *	11650.298	28.72	15.29	44.01	54.00	-9.99	AVG
2	11650.488	42.59	15.29	57.88	74.00	-16.12	peak

Remarks:
1.Factor (dB/m) = Antenna Factor (dB/m)+Cable Factor (dB)-Pre-amplifier Factor
2.Margin value = Level -Limit value