# FCC 47 CFR PART 15 SUBPART C

# CERTIFICATION TEST REPORT

*For*

Electric Jukebox

Model No.: EJ80, EJ81

FCC ID: 2AGKTEJ81

Trademark: Electric Jukebox

REPORT NO.: ES151110025E4

ISSUE DATE: December 14, 2015

*Prepared for*

MAGIC MEDIA WORKS LIMITED

One West Smithfield London EC1A 9JU UK.

*Prepared by*

EMTEK (SHENZHEN) CO., LTD

Bldg 69, Majialong Industry Zone, Nanshan District,
Shenzhen, Guangdong, China
TEL: 86-755-26954280
FAX: 86-755-26954282

# TABLE OF CONTENTS

**1 TEST RESULT CERTIFICATION ..... 3**

**2 EUT TECHNICAL DESCRIPTION ..... 4**

**3 SUMMARY OF TEST RESULT ..... 6**

**4 TEST METHODOLOGY ..... 7**

4.1 GENERAL DESCRIPTION OF APPLIED STANDARDS ..... 7
4.2 MEASUREMENT EQUIPMENT USED ..... 7
4.3 DESCRIPTION OF TEST MODES ..... 8

**5 FACILITIES AND ACCREDITATIONS ..... 9**

5.1 FACILITIES ..... 9
5.2 LABORATORY ACCREDITATIONS AND LISTINGS ..... 9

**6 TEST SYSTEM UNCERTAINTY ..... 10**

**7 SETUP OF EQUIPMENT UNDER TEST ..... 11**

7.1 RADIO FREQUENCY TEST SETUP 1 ..... 11
7.2 RADIO FREQUENCY TEST SETUP 2 ..... 11
7.3 CONDUCTED EMISSION TEST SETUP ..... 13
7.4 BLOCK DIAGRAM CONFIGURATION OF TEST SYSTEM ..... 14
7.5 SUPPORT EQUIPMENT ..... 14

**8 TEST REQUIREMENTS ..... 15**

8.1 BANDWIDTH TEST ..... 15
8.2 RADIATED SPURIOUS EMISSION ..... 18
8.3 CONDUCTED EMISSIONS TEST ..... 33
8.4 ANTENNA APPLICATION ..... 38

# 1 TEST RESULT CERTIFICATION

| | |
|---|---|
| Applicant: | MAGIC MEDIA WORKS LIMITED<br>One West Smithfield London EC1A 9JU UK. |
| Manufacturer: | LITE STAR ELECTRONICS TECHNOLOGY CO., LTD.<br>Xingchen Science & Technology Park, Lianbi Road, Wulian Industry Area, Fenggang Town, Dongguan, China. |
| Product Description: | Electric Jukebox |
| Model Number: | EJ80, EJ81 |
| File Number: | ES151110025E4 |
| Date of Test: | November 11, 2015 to November 30, 2015 |

Measurement Procedure Used:

| APPLICABLE STANDARDS | |
|---|---|
| STANDARD | TEST RESULT |
| FCC 47 CFR Part 2, Subpart J:2014<br>FCC 47 CFR Part 15, Subpart C:2014 | PASS |

The above equipment was tested by EMTEK (SHENZHEN) CO., LTD. The test data, data evaluation, test procedures, and equipment configurations shown in this report were made in accordance with the procedures given in ANSI C63.10 (2013) and the energy emitted by the sample EUT tested as described in this report is in compliance with the requirements of FCC Rules Part 2 and Part 15.249

The test results of this report relate only to the tested sample identified in this report.

Date of Test : November 11, 2015 to November 30, 2015

Prepared by : Jack Li/Editor

Reviewer : Joe Xia/Supervisor

Approve & Authorized Signer : Lisa Wang/Manager

## 2 EUT TECHNICAL DESCRIPTION

| | |
|---|---|
| Device Type: | Fixed Device |
| Exposure Category: | Uncontrolled Environment/General Population |
| Product Name: | Electric Jukebox<br>(Note: The device consists of a TV stick and controller.) |
| Model Number: | EJ80, EJ81<br>(Note:These models are identical in circuitry and electrical, mechanical and physical construction; the only differences are the silk-screen, color and model no. for trading purpose. We prepare EJ80 for test. and the worst result recorded in the report.) |
| Controller information as below: | |
| Power supply: | ☒DC supply:<br>DC 3.7V/550mAh from Li-ion Battery or DC 5V from USB Port. |
| | ☒Adapter supply:<br>Model: TKAC-201-DC<br>Input: AC 100-240V, 50/60Hz, 0.6A Max<br>Output: DC 5V 1.5A<br>Output: USB 5V 0.5A |
| Operating Mode(s) & Operating Frequency Range(s): | 2.4G ISM Band: 2404MHz-2480MHz |
| Test Modulation: | GFSK; |
| Number of Channels: | 77 Channels; |
| Type of Antenna: | PCB Antenna |
| Antenna Gain: | 1dBi |
| Temperature Extreme Range: | 0°C ~ +40°C |

*Note: for more details, please refer to the User's manual of the EUT.*

**Modified Information**

| Version. | Summary | Date of Rev. | Report No. |
|---|---|---|---|
| Ver.1.0 | Original Report | 2015-11-30 | ES151110025E4 |
| | | | |
| | | | |
| | | | |
| | | | |
| | | | |
| | | | |
| | | | |
| | | | |
| | | | |
| | | | |
| | | | |
| | | | |
| | | | |
| | | | |

# 3 SUMMARY OF TEST RESULT

| FCC Part Clause | Test Parameter | Verdict | Remark |
|---|---|---|---|
| 15.207 | Conducted Emission | PASS | |
| 15.209 | Radiated Emission | PASS | |
| 15.249 | Radiated Spurious Emission | PASS | |
| 15.249 | Band edge test | PASS | |
| 15.249 | 20dB Bandwidth | PASS | |

NOTE1: N/A (Not Applicable)
NOTE2: The report use radiated measurements in the restricted frequency bands. In addition, the radiated test is also performed to ensure the emissions emanating from the device cabinet also comply with the applicable limits.

RELATED SUBMITTAL(S) / GRANT(S):

This submittal(s) (test report) is intended for FCC ID: 2AGKTEJ81 filing to comply with Section 15.249 of the FCC Part 15, Subpart C Rules.
The system is compliance with Subpart B is authorized under a DOC procedure

# 4 TEST METHODOLOGY

## 4.1 GENERAL DESCRIPTION OF APPLIED STANDARDS

According to its specifications, the EUT must comply with the requirements of the following standards:
FCC 47 CFR Part 2, Subpart J
FCC 47 CFR Part 15, Subpart C

## 4.2 MEASUREMENT EQUIPMENT USED

### 4.2.1 Conducted Emission Test Equipment

| EQUIPMENT TYPE | MFR | MODEL NUMBER | SERIAL NUMBER | LAST CAL. |
|---|---|---|---|---|
| Test Receiver | Rohde & Schwarz | ESCS30 | 828985/018 | 05/16/2015 |
| L.I.S.N. | Schwarzbeck | NNLK8129 | 8129203 | 05/16/2015 |
| 50Ω Coaxial Switch | Anritsu | MP59B | M20531 | N/A |
| Pulse Limiter | Rohde & Schwarz | ESH3-Z2 | 100006 | 05/16/2015 |
| Voltage Probe | Rohde & Schwarz | TK9416 | N/A | 05/16/2015 |
| I.S.N | Rohde & Schwarz | ENY22 | 1109.9508.02 | 05/16/2015 |

### 4.2.2 Radiated Emission Test Equipment

| EQUIPMENT TYPE | MFR | MODEL NUMBER | SERIAL NUMBER | LAST CAL. |
|---|---|---|---|---|
| EMI Test Receiver | Rohde & Schwarz | ESU | 1302.6005.26 | 05/16/2015 |
| Pre-Amplifier | HP | 8447D | 2944A07999 | 05/16/2015 |
| Bilog Antenna | Schwarzbeck | VULB9163 | 142 | 05/16/2015 |
| Loop Antenna | Schwarzbeck | FMZB 1519 | 012 | 05/16/2015 |
| Horn Antenna | Schwarzbeck | BBHA 9170 | BBHA9170399 | 05/16/2015 |
| Horn Antenna | Schwarzbeck | BBHA 9120 | D143 | 05/16/2015 |
| Cable | Schwarzbeck | AK9513 | ACRX1 | 05/16/2015 |
| Cable | Rosenberger | N/A | FP2RX2 | 05/16/2015 |
| Cable | Schwarzbeck | AK9513 | CRPX1 | 05/16/2015 |
| Cable | Schwarzbeck | AK9513 | CRRX2 | 05/16/2015 |
| Pre-Amplifier | A.H. | PAM-0126 | 1415261 | 05/16/2015 |

### 4.2.3 Radio Frequency Test Equipment

| EQUIPMENT TYPE | MFR | MODEL NUMBER | SERIAL NUMBER | LAST CAL. |
|---|---|---|---|---|
| Spectrum Analyzer | Agilent | E4407B | 88156318 | 05/16/2015 |
| EMI Test Receiver | Rohde & Schwarz | FSV30 | 103040 | 05/16/2015 |
| Signal Analyzer | Agilent | N9010A | My53470879 | 05/16/2015 |
| Power meter | Anritsu | ML2495A | 0824006 | 05/16/2015 |
| Power sensor | Anritsu | MA2411B | 0738172 | 05/16/2015 |

***Remark:*** *Each piece of equipment is scheduled for calibration once a year.*

### 4.3 DESCRIPTION OF TEST MODES

The EUT has been tested under its typical operating condition.
The EUT configuration for testing is installed on RF field strength measurement to meet the Commissions requirement and operating in a manner which intends to maximize its emission characteristics in a continuous normal application.

The Transmitter was operated in the normal operating mode. The TX frequency was fixed which was for the purpose of the measurements.

Test of channel included the lowest and middle and highest frequency to perform the test, then record on this report.

Those modulation GFSK were used for all test.

Pre-defined engineering program for regulatory testing used to control the EUT for staying in continuous transmitting and receiving mode is programmed.

☒Frequency and Channel list:

| Channel | Frequency (MHz) | Channel | Frequency (MHz) | Channel | Frequency (MHz) |
|---|---|---|---|---|---|
| 1 | 2404 | 35 | 2436 | … | … |
| 2 | 2405 | 36 | 2438 | 75 | 2478 |
| 3 | 2406 | 37 | 2440 | 76 | 2479 |
| … | … | … | … | 77 | 2480 |

# 5 FACILITIES AND ACCREDITATIONS

## 5.1 FACILITIES

All measurement facilities used to collect the measurement data are located at

Bldg 69, Majialong Industry Zone District, Nanshan District, Shenzhen, China
The sites are constructed in conformance with the requirements of ANSI C63.7, ANSI C63.10 and CISPR Publication 22.

## 5.2 LABORATORY ACCREDITATIONS AND LISTINGS

Site Description

| | | |
|---|---|---|
| EMC Lab. | : | Accredited by CNAS, 2013.10.29<br>The certificate is valid until 2016.10.28<br>The Laboratory has been assessed and proved to be in compliance with CNAS-CL01:2006 (identical to ISO/IEC 17025:2005)<br>The Certificate Registration Number is L2291.<br><br>Accredited by TUV Rheinland Shenzhen 2015.08.04<br>The Laboratory has been assessed according to the requirements ISO/IEC 17025.<br><br>Accredited by FCC, April 17, 2013<br>The Certificate Registration Number is 709623.<br><br>Accredited by FCC, July 24, 2013<br>The Certificate Registration Number is 406365.<br><br>Accredited by Industry Canada, November 24, 2015<br>The Certificate Registration Number is 4480A-2. |
| Name of Firm | : | EMTEK (SHENZHEN) CO., LTD. |
| Site Location | : | Bldg 69, Majialong Industry Zone,<br>Nanshan District, Shenzhen, Guangdong, China |

# 6 TEST SYSTEM UNCERTAINTY

The following measurement uncertainty levels have been estimated for tests performed on the apparatus:

| Parameter | Uncertainty |
|---|---|
| Radio Frequency | ±1x10^-5 |
| Maximum Peak Output Power Test | ±1.0dB |
| Conducted Emissions Test | ±2.0dB |
| Radiated Emission Test | ±2.0dB |
| Power Density | ±2.0dB |
| Occupied Bandwidth Test | ±1.0dB |
| Band Edge Test | ±3dB |
| All emission, radiated | ±3dB |
| Antenna Port Emission | ±3dB |
| Temperature | ±0.5℃ |
| Humidity | ±3% |

Measurement Uncertainty for a level of Confidence of 95%

# 7 SETUP OF EQUIPMENT UNDER TEST

## 7.1 RADIO FREQUENCY TEST SETUP 1

The WLAN component's antenna ports(s) of the EUT are connected to the measurement instrument per an appropriate attenuator. The EUT is controlled by PC/software to emit the specified signals for the purpose of measurements.

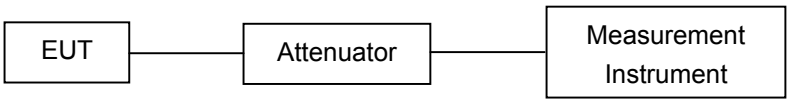


## 7.2 RADIO FREQUENCY TEST SETUP 2

The test site semi-anechoic chamber has met the requirement of NSA tolerance 4 dB according to the standards: ANSI C63.10. The test distance is 3m.The setup is according to the requirements in Section 13.1.4.1 of ANSI C63.10-2013 and CAN/CSA-CEI/IEC CISPR 22.

Below 30MHz:
The EUT is placed on a turntable 0.8 meters above the ground in the chamber, 3 meter away from the antenna (loop antenna). The Antenna should be positioned with its plane vertical at the specified distance from the EUT and rotated about its vertical axis for maximum response at each azimuth about the EUT. The center of the loop shall be 1 m above the ground. For certain applications, the loop antenna plane may also need to be positioned horizontally at the specified distance from the EUT.

Above 30MHz:
The EUT is placed on a turntable 0.8 meters above the ground in the chamber, 3 meter away from the antenna. The maximal emission value is acquired by adjusting the antenna height, polarisation and turntable azimuth. Normally, the height range of antenna is 1 m to 4 m, the azimuth range of turntable is 0° to 360°, and the receive antenna has two polarizations Vertical (V) and Horizontal (H).

Above 1GHz:
(Note: the FCC's permission to use 1.5m as an alternative per TCBC Conf call of Dec. 2, 2014.)
The EUT is placed on a turntable 1.5 meters above the ground in the chamber, 3 meter away from the antenna. The maximal emission value is acquired by adjusting the antenna height, polarisation and turntable azimuth. Normally, the height range of antenna is 1 m to 4 m, the azimuth range of turntable is 0° to 360°, and the receive antenna has two polarizations Vertical (V) and Horizontal (H).

(a) Radiated Emission Test Set-Up, Frequency Below 30MHz

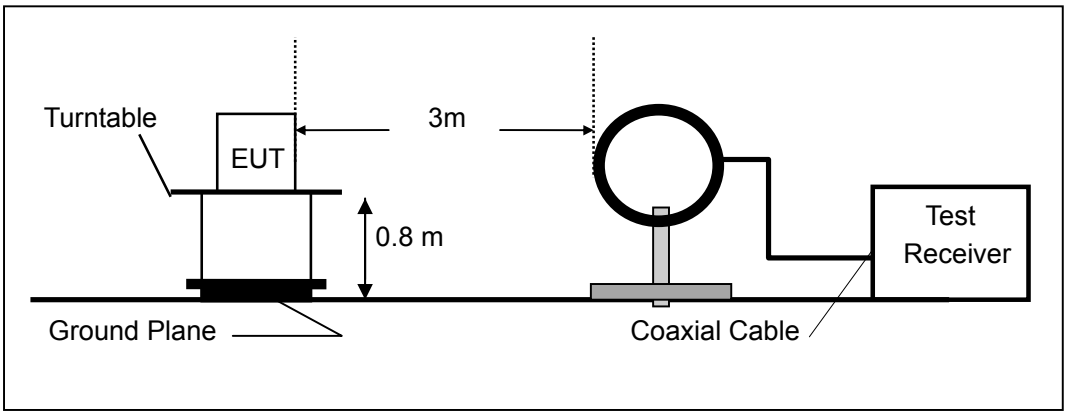

(b) Radiated Emission Test Set-Up, Frequency Below 1000MHz

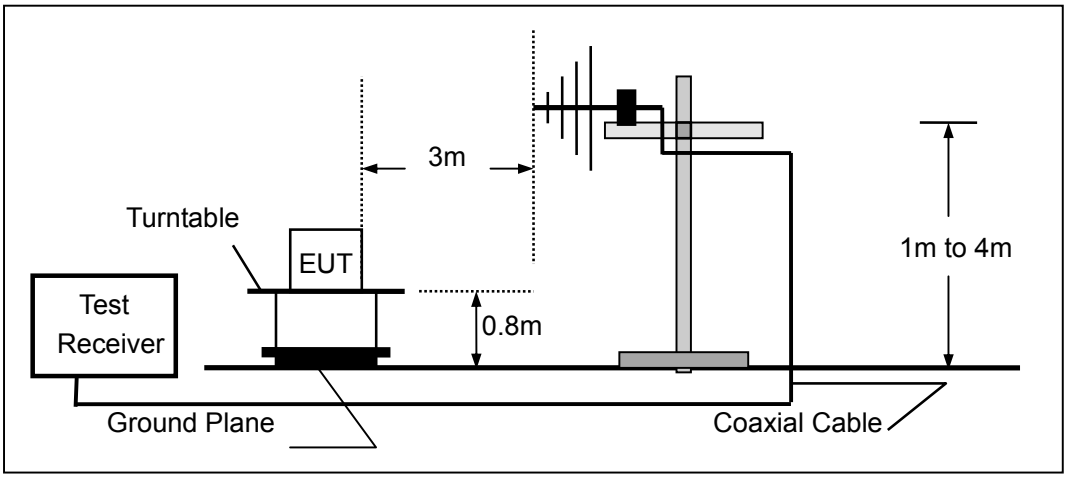


(c) Radiated Emission Test Set-Up, Frequency above 1000MHz

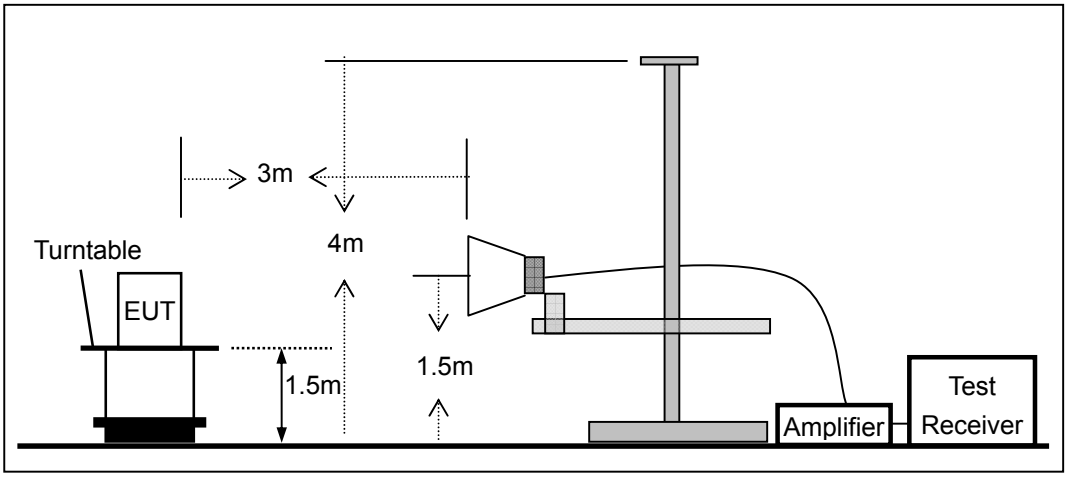

### 7.3 CONDUCTED EMISSION TEST SETUP

The mains cable of the EUT (Electric Jukebox ) must be connected to LISN. The LISN shall be placed 0.8 m from the boundary of EUT and bonded to a ground reference plane for LISN mounted on top of the ground reference plane. This distance is between the closest points of the LISN and the EUT. All other units of the EUT and associated equipment shall be at least 0.8m from the LISN.

Ground connections, where required for safety purposes, shall be connected to the reference ground point of the LISN and, where not otherwise provided or specified by the manufacturer, shall be of same length as the mains cable and run parallel to the mains connection at a separation distance of not more than 0.8 m.

According to the requirements in Section 13.1.4.1 of ANSI C63.10-2013 Conducted emissions from the EUT measured in the frequency range between 0.15 MHz and 30 MHz using CISPR Quasi-Peak and average detector mode.

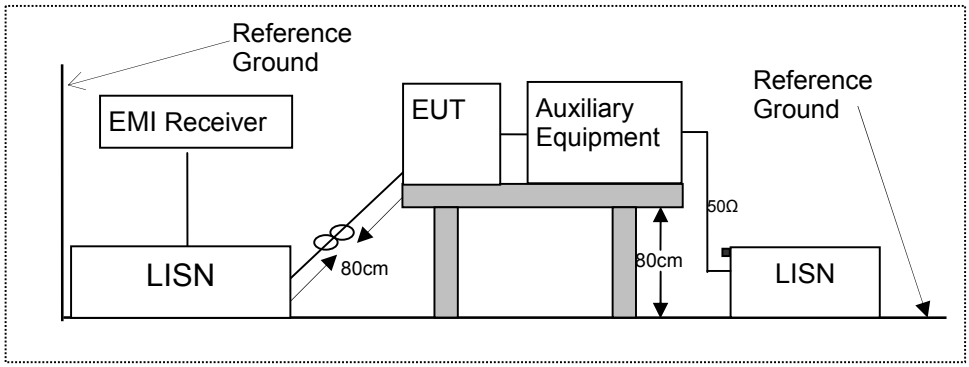

## 7.4 BLOCK DIAGRAM CONFIGURATION OF TEST SYSTEM

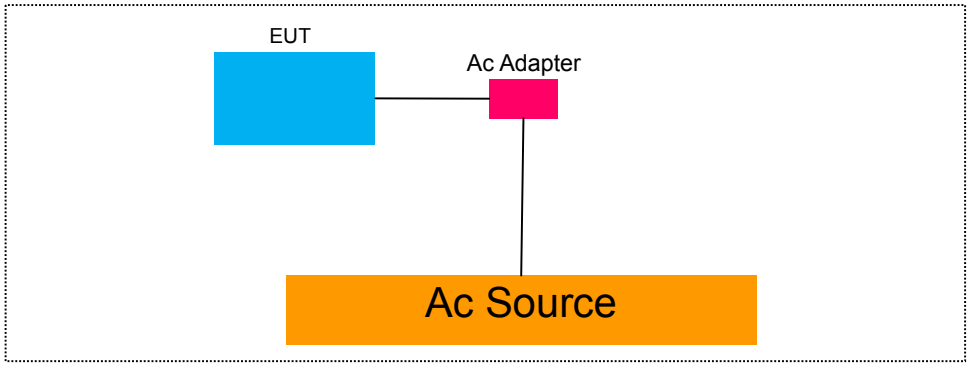


## 7.5 SUPPORT EQUIPMENT

| Item | Equipment | Mfr/Brand | Model/Type No. | FCC ID | Note |
|---|---|---|---|---|---|
| 1 | Electric Jukebox | Electric Jukebox | EJ80 | 2AGKTEJ81 | EUT |
| | | | | | |

***Notes:***

1. *All the equipment/cables were placed in the worst-case configuration to maximize the emission during the test.*
2. *Grounding was established in accordance with the manufacturer's requirements and conditions for the intended use.*

# 8 TEST REQUIREMENTS

## 8.1 BANDWIDTH TEST

8.1.1 Applicable Standard

According to FCC Part 15.249

### 8.1.2 Conformance Limit

N/A

### 8.1.3 Test Configuration

Test according to clause 7.1 radio frequency test setup 1

### 8.1.4 Test Procedure

The EUT was operating in controlled its channel. Printed out the test result from the spectrum by hard copy function.
The RF output of EUT was connected to the spectrum analyzer by RF cable and attenuator. The path loss was compensated to the results for each measurement.
Set to the maximum power setting and enable the EUT transmit continuously
Set RBW = 100 kHz.
Set the video bandwidth (VBW) =300 kHz.
Set Span=2 times OBW
Set Detector = Peak.
Set Trace mode = max hold.
Set Sweep = auto couple.
Allow the trace to stabilize.
Measure the maximum width of the emission that is constrained by the frequencies associated with the two outermost amplitude points (upper and lower frequencies) that are attenuated by 20 dB relative to the maximum level measured in the fundamental emission.
Measure and record the results in the test report.

### 8.1.5 Test Results

| | | | |
|---|---|---|---|
| Temperature : | 28℃ | Test Date : | November 23, 2015 |
| Humidity : | 65 % | Test By: | YXL |

| Operation Mode | Channel Number | Channel Frequency (MHz) | Measurement Bandwidth (KHz) | Limit (kHz) | Verdict |
|---|---|---|---|---|---|
| GFSK | 1 | 2404 | 285.1 | N/A | PASS |
| | 37 | 2440 | 292.7 | N/A | PASS |
| | 77 | 2480 | 297.9 | N/A | PASS |

| Test Model | Bandwidth Test |
|---|---|
| | GFSK |
| | Channel1:2404MHz |

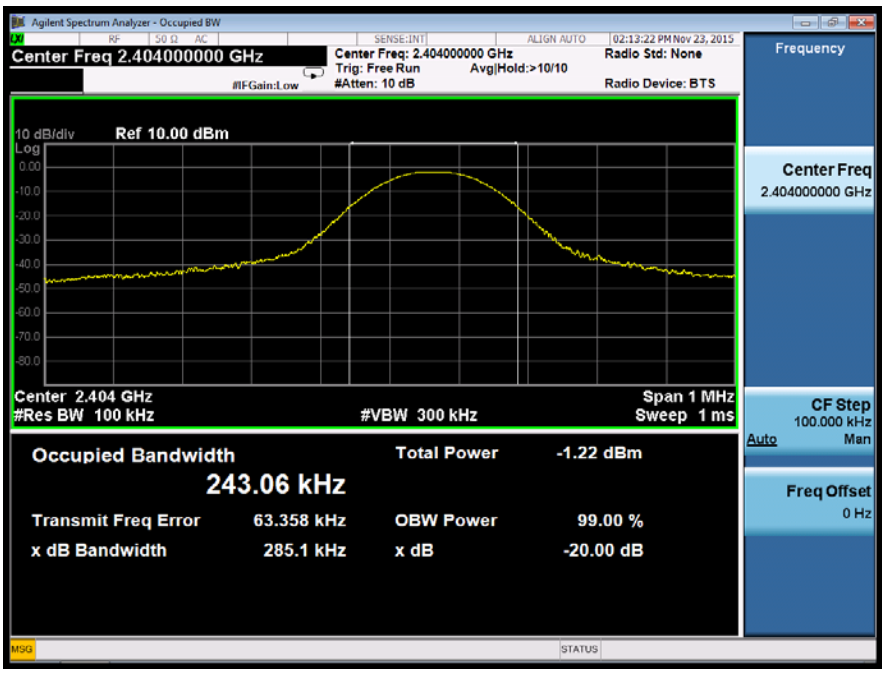


| Test Model | Bandwidth Test |
|---|---|
| | GFSK |
| | Channel37:2440MHz |

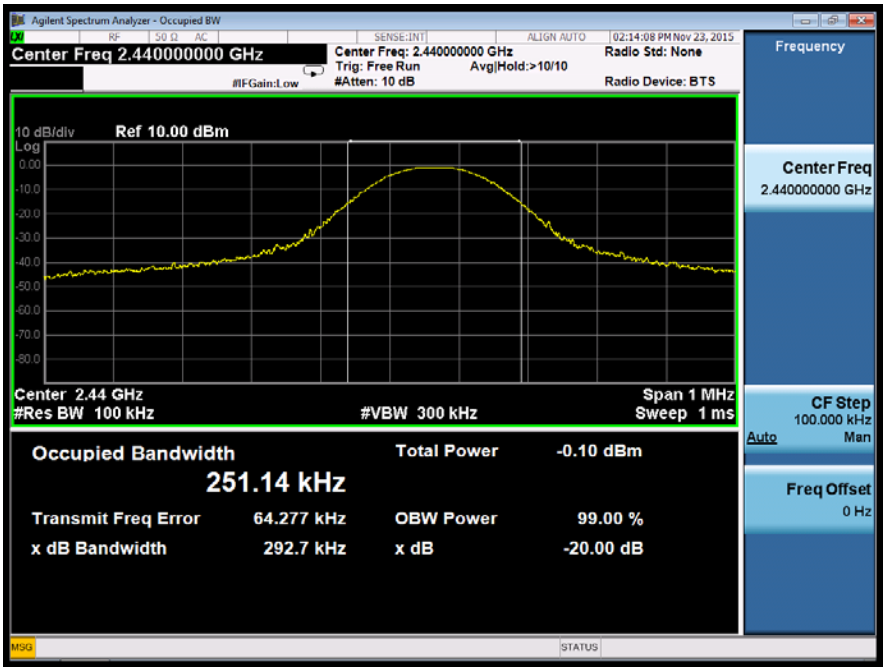

| Test Model | Bandwidth Test |
|---|---|
| | GFSK |
| | Channel77:2476MHz |

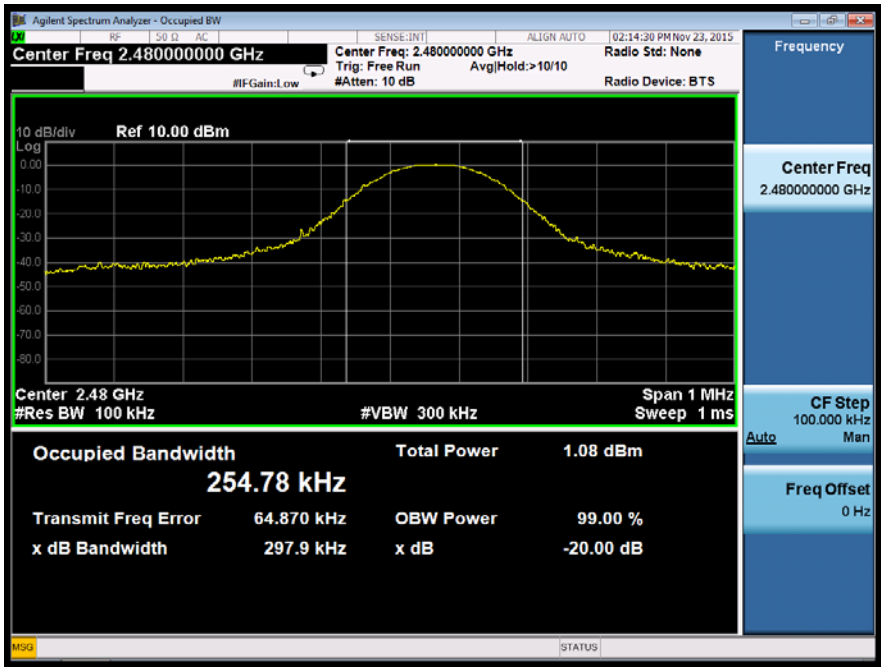

## 8.2 RADIATED SPURIOUS EMISSION

### 8.2.1 Applicable Standard

According to FCC Part 15.249 and 15.209

### 8.2.2 Conformance Limit

According to FCC Part 15.249: radiated emissions which fall in the restricted bands, as defined in §15.205(a), must also comply with the radiated emission limits specified in §15.209(a) (see §15.205(c)).
According to FCC Part15.205, Restricted bands

| MHz | MHz | MHz | GHz |
|---|---|---|---|
| 0.090-0.110 | 16.42-16.423 | 399.9-410 | 4.5-5.15 |
| 10.495-0.505 | 16.69475-16.69525 | 608-614 | 5.35-5.46 |
| 2.1735-2.1905 | 16.80425-16.80475 | 960-1240 | 7.25-7.75 |
| 4.125-4.128 | 25.5-25.67 | 1300-1427 | 8.025-8.5 |
| 4.17725-4.17775 | 37.5-38.25 | 1435-1626.5 | 9.0-9.2 |
| 4.20725-4.20775 | 73-74.6 | 1645.5-1646.5 | 9.3-9.5 |
| 6.215-6.218 | 74.8-75.2 | 1660-1710 | 10.6-12.7 |
| 6.26775-6.26825 | 123-138 | 2200-2300 | 14.47-14.5 |
| 8.291-8.294 | 149.9-150.05 | 2310-2390 | 15.35-16.2 |
| 8.362-8.366 | 156.52475-156.52525 | 2483.5-2500 | 17.7-21.4 |
| 8.37625-8.38675 | 156.7-156.9 | 2690-2900 | 22.01-23.12 |
| 8.41425-8.41475 | 162.0125-167.17 | 3260-3267 | 23.6-24.0 |
| 12.29-12.293 | 167.72-173.2 | 3332-3339 | 31.2-31.8 |
| 12.51975-12.52025 | 240-285 | 3345.8-3358 | 36.43-36.5 |
| 12.57675-12.57725 | 322-335.4 | 3600-4400 | (2) |
| 13.36-13.41 | | | |

According to FCC Part15.205, the level of any transmitter spurious emission in Restricted bands shall not exceed the level of the emission specified in the following table

| Restricted Frequency(MHz) | Field Strength (μV/m) | Field Strength (dBμV/m) | Measurement Distance |
|---|---|---|---|
| 0.009-0.490 | 2400/F(KHz) | 20 log (uV/m) | 300 |
| 0.490-1.705 | 2400/F(KHz) | 20 log (uV/m) | 30 |
| 1.705-30 | 30 | 29.5 | 30 |
| 30-88 | 100 | 40 | 3 |
| 88-216 | 150 | 43.5 | 3 |
| 216-960 | 200 | 46 | 3 |
| Above 960 | 500 | 54 | 3 |

Remark :1. Emission level in dBuV/m=20 log (uV/m)
2. Measurement was performed at an antenna to the closed point of EUT distance of meters.
3. Distance extrapolation factor =40log(Specific distance/ test distance)( dB);
Limit line=Specific limits(dBuV) + distance extrapolation factor.
for the frequency ranges below 30 MHz, a narrower RBW is used for these ranges but the measured value should add a RBW correction factor (RBWCF) where RBWCF [dB] =10*lg(100 [kHz]/narrower RBW [kHz]). , the narrower RBW is 1 kHz and RBWCF is 20 dB for the frequency 9 kHz to 150 kHz, and the narrower RBW is 10 kHz and RBWCF is 10 dB for the frequency 150 kHz to 30 MHz.

Field strength of fundamental and Field strength of harmonics Limit:

| Fundamental frequency | Field strength of fundamental (millivolts/meter) | Field strength of harmonics (microvolts/meter) |
|---|---|---|
| 902-928 MHz | 50(94 dBV/m) | 500(54 dBV/m) |
| 2400-2483.5 MHz | 50(94 dBV/m) | 500(54 dBV/m) |
| 5725-5875 MHz | 50(94 dBV/m) | 500(54 dBV/m) |
| 24.0-24.25 GHz | 250(108 dBV/m) | 2500(68 dBV/m) |

### 8.2.3 Test Configuration

Test according to clause 7.2 radio frequency test setup 2

### 8.2.4 Test Procedure

This test is required for any spurious emission that falls in a Restricted Band, as defined in Section 15.205. It must be performed with the highest gain of each type of antenna proposed for use with the EUT. Use the following spectrum analyzer settings:
For Above 1GHz:
The EUT was placed on a turn table which is 1.5m above ground plane.
Maximum procedure was performed on the highest emissions to ensure EUT compliance.
Span = wide enough to fully capture the emission being measured
RBW = 1 MHz
VBW ≥ RBW
Sweep = auto
Detector function = peak
Trace = max hold
For Below 1GHz:
The EUT was placed on a turn table which is 0.8m above ground plane.
Maximum procedure was performed on the highest emissions to ensure EUT compliance.
Span = wide enough to fully capture the emission being measured
RBW = 100 kHz for
VBW ≥ RBW
Sweep = auto
Detector function = peak
Trace = max hold
For Below 30MHz:
The EUT was placed on a turn table which is 0.8m above ground plane.
Maximum procedure was performed on the highest emissions to ensure EUT compliance.
Span = wide enough to fully capture the emission being measured
RBW = 9kHz
VBW ≥ RBW
Sweep = auto
Detector function = peak
Trace = max hold
For Below 150KHz:
The EUT was placed on a turn table which is 0.8m above ground plane.
Maximum procedure was performed on the highest emissions to ensure EUT compliance.
Span = wide enough to fully capture the emission being measured
RBW = 200Hz
VBW ≥ RBW
Sweep = auto
Detector function = peak
Trace = max hold
Follow the guidelines in ANSI C63.10-2013 with respect to maximizing the emission by rotating the EUT,

measuring the emission while the EUT is situated in three orthogonal planes (if appropriate), adjusting the measurement antenna height and polarization, etc. A pre-amp and a high pass filter are required for this test, in order to provide the measuring system with sufficient sensitivity. Allow the trace to stabilize. The peak reading of the emission, after being corrected by the antenna factor, cable loss, pre-amp gain, etc., is the peak field strength, which must comply with the limit specified in Section 15.35(b). Submit this data.
Now set the VBW to 10 Hz, while maintaining all of the other instrument settings. This peak level, once corrected, must comply with the limit specified in Section 15.209. If the dwell time per channel of the hopping signal is less than 100 ms, then the reading obtained with the 10 Hz VBW may be further adjusted by a "duty cycle correction factor", derived from 20log(dwell time/100 ms), in an effort to demonstrate compliance with the 15.209 limit. Submit this data.
Repeat above procedures until all frequency measured was complete.

### 8.2.5 Test Results

■ Spurious Emission below 30MHz (9KHz to 30MHz)

| | | | |
|---|---|---|---|
| Temperature: | 24℃ | Test Date: | November 23, 2015 |
| Humidity: | 53 % | Test By: | YXL |
| Test mode: | TX Mode | | |

| Freq. (MHz) | Ant.Pol. H/V | Emission Level(dBuV/m) | | Limit 3m(dBuV/m) | | Over(dB) | |
|---|---|---|---|---|---|---|---|
| | | PK | AV | PK | AV | PK | AV |
| -- | -- | -- | -- | -- | -- | -- | -- |

Note: the amplitude of spurious emission that is attenuated by more than 20dB below the permissible limit has no need to be reported.
Distance extrapolation factor =40log(Specific distance/ test distance)( dB);
Limit line=Specific limits(dBuV) + distance extrapolation factor

■ Spurious Emission below 1GHz (30MHz to 1GHz)

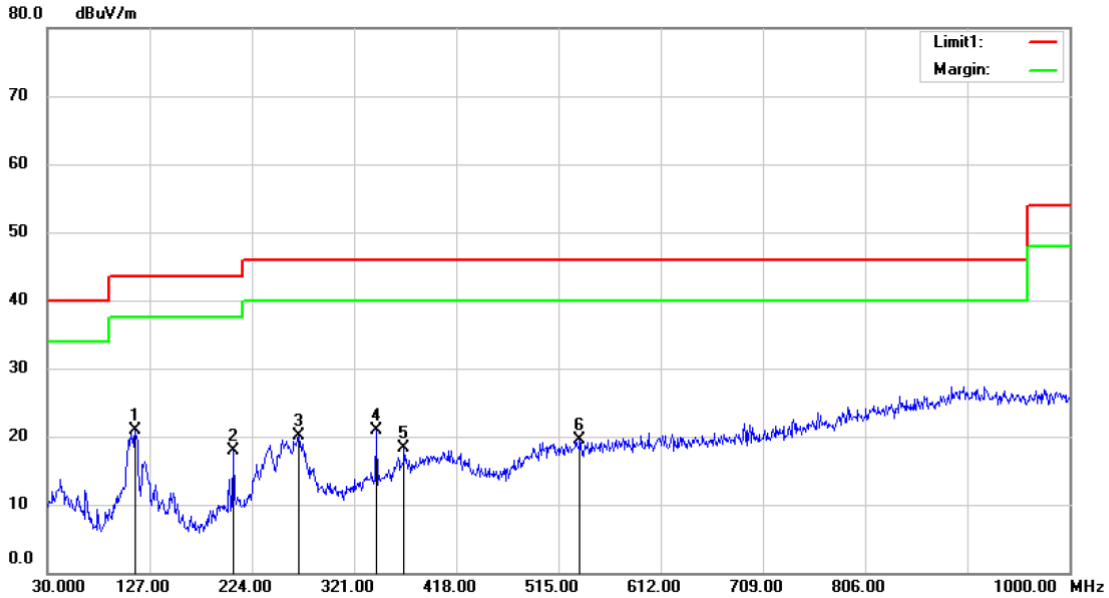


Site 3m Chamber #3 Polarization: ***Horizontal*** Temperature: 24 C

Limit: ( RE)FCC PART 15 CLASS B Power: AC 120V/60Hz Humidity: 53 %

Mode:GFSK TX Channel Low

Note:

| No. | Mk. | Freq. | Reading Level | Correct Factor | Measure-ment | Limit | Over | | Antenna Height | Table Degree | |
|---|---|---|---|---|---|---|---|---|---|---|---|
| | | MHz | dBuV | dB | dBuV/m | dBuV/m | dB | Detector | cm | degree | Comment |
| 1 | * | 113.4200 | 35.94 | -14.94 | 21.00 | 43.50 | -22.50 | QP | | | |
| 2 | | 206.5400 | 34.25 | -16.38 | 17.87 | 43.50 | -25.63 | QP | | | |
| 3 | | 268.6200 | 32.71 | -12.70 | 20.01 | 46.00 | -25.99 | QP | | | |
| 4 | | 342.3400 | 33.11 | -12.26 | 20.85 | 46.00 | -25.15 | QP | | | |
| 5 | | 368.5300 | 28.70 | -10.42 | 18.28 | 46.00 | -27.72 | QP | | | |
| 6 | | 535.3700 | 27.03 | -7.51 | 19.52 | 46.00 | -26.48 | QP | | | |

*:Maximum data x:Over limit !:over margin Operator: KK

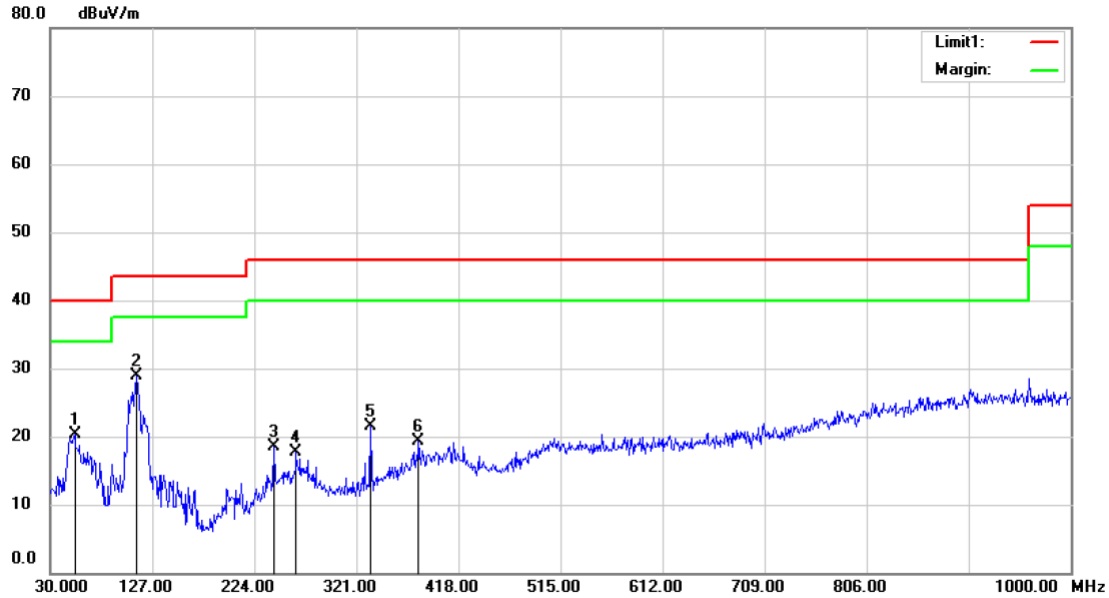


Site 3m Chamber #3 Polarization: ***Vertical*** Temperature: 24 C

Limit: ( RE)FCC PART 15 CLASS B Power: AC 120V/60Hz Humidity: 53 %

Mode:GFSK TX Channel Low

Note:

| No. | Mk. | Freq. | Reading Level | Correct Factor | Measure-ment | Limit | Over | | Antenna Height | Table Degree | |
|---|---|---|---|---|---|---|---|---|---|---|---|
| | | MHz | dBuV | dB | dBuV/m | dBuV/m | dB | Detector | cm | degree | Comment |
| 1 | | 53.2800 | 36.03 | -15.73 | 20.30 | 40.00 | -19.70 | QP | | | |
| 2 | * | 112.4500 | 43.67 | -14.74 | 28.93 | 43.50 | -14.57 | QP | | | |
| 3 | | 242.4300 | 32.16 | -13.71 | 18.45 | 46.00 | -27.55 | QP | | | |
| 4 | | 263.7700 | 30.47 | -12.75 | 17.72 | 46.00 | -28.28 | QP | | | |
| 5 | | 334.5800 | 34.34 | -12.75 | 21.59 | 46.00 | -24.41 | QP | | | |
| 6 | | 380.1700 | 29.38 | -9.99 | 19.39 | 46.00 | -26.61 | QP | | | |

*:Maximum data x:Over limit !:over margin Operator: KK

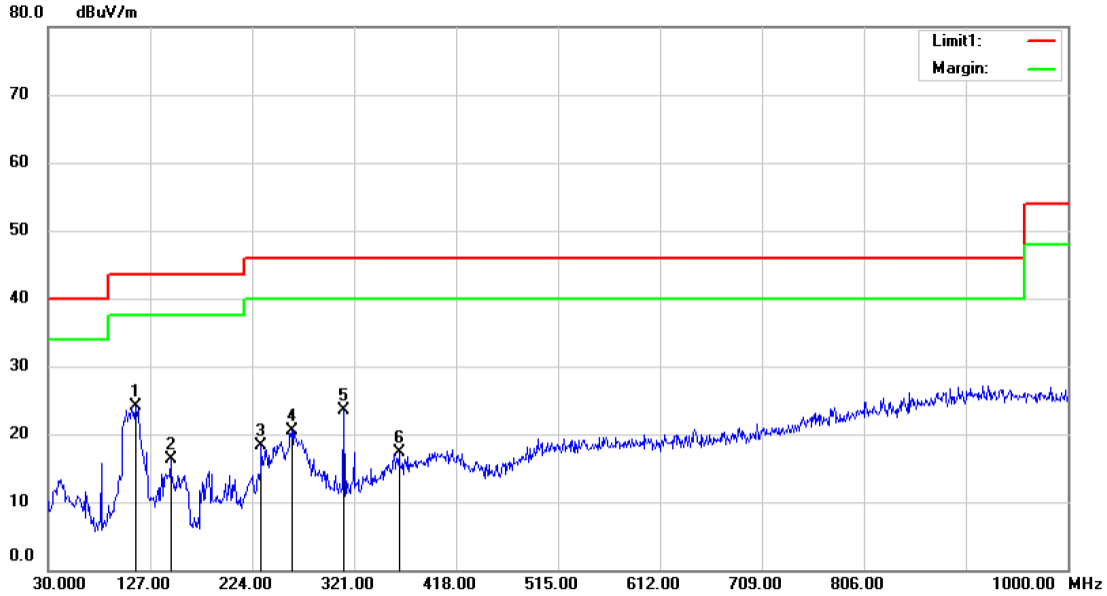


Site 3m Chamber #3 Polarization: ***Horizontal*** Temperature: 24 C

Limit: ( RE)FCC PART 15 CLASS B Power: AC 120V/60Hz Humidity: 53 %

Mode:GFSK TX Channel Mid

Note:

| No. | Mk. | Freq. | Reading Level | Correct Factor | Measure-ment | Limit | Over | | Antenna Height | Table Degree | |
|---|---|---|---|---|---|---|---|---|---|---|---|
| | | MHz | dBuV | dB | dBuV/m | dBuV/m | dB | Detector | cm | degree | Comment |
| 1 | * | 113.4200 | 38.99 | -14.94 | 24.05 | 43.50 | -19.45 | QP | | | |
| 2 | | 146.4000 | 34.22 | -17.99 | 16.23 | 43.50 | -27.27 | QP | | | |
| 3 | | 232.7300 | 33.00 | -14.75 | 18.25 | 46.00 | -27.75 | QP | | | |
| 4 | | 261.8300 | 33.24 | -12.77 | 20.47 | 46.00 | -25.53 | QP | | | |
| 5 | | 311.3000 | 37.08 | -13.64 | 23.44 | 46.00 | -22.56 | QP | | | |
| 6 | | 363.6800 | 27.93 | -10.59 | 17.34 | 46.00 | -28.66 | QP | | | |

*:Maximum data x:Over limit !:over margin Operator: KK

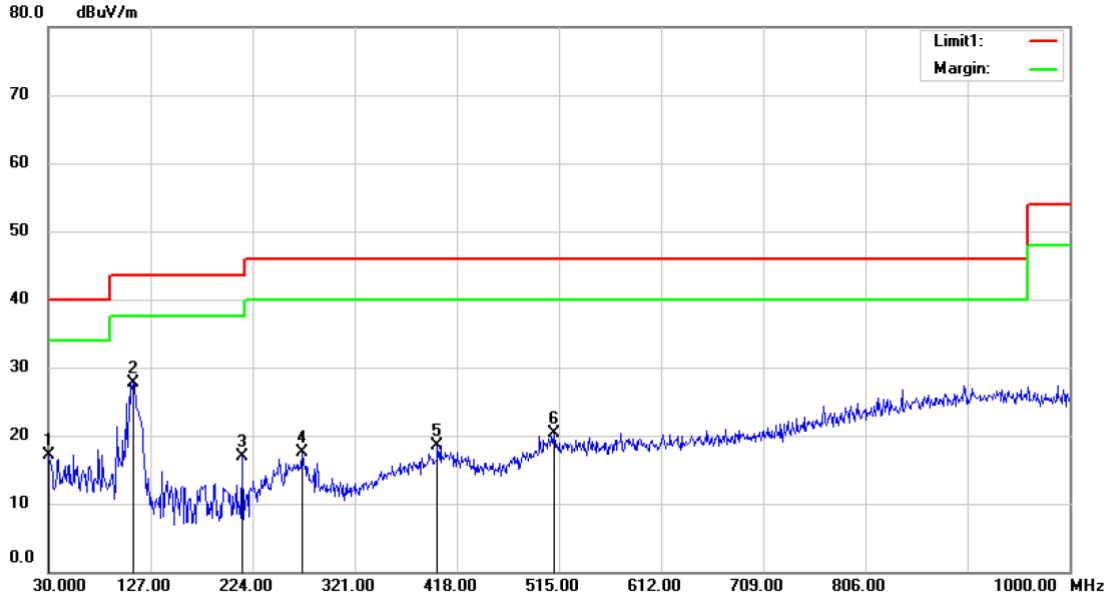


Site 3m Chamber #3 Polarization: ***Vertical*** Temperature: 24 C

Limit: ( RE)FCC PART 15 CLASS B Power: AC 120V/60Hz Humidity: 53 %

Mode:GFSK TX Channel Mid

Note:

| No. | Mk. | Freq. | Reading Level | Correct Factor | Measure-ment | Limit | Over | | Antenna Height | Table Degree | |
|---|---|---|---|---|---|---|---|---|---|---|---|
| | | MHz | dBuV | dB | dBuV/m | dBuV/m | dB | Detector | cm | degree | Comment |
| 1 | | 30.0000 | 33.54 | -16.46 | 17.08 | 40.00 | -22.92 | QP | | | |
| 2 | * | 110.5100 | 41.96 | -14.33 | 27.63 | 43.50 | -15.87 | QP | | | |
| 3 | | 214.3000 | 33.23 | -16.38 | 16.85 | 43.50 | -26.65 | QP | | | |
| 4 | | 271.5300 | 30.19 | -12.67 | 17.52 | 46.00 | -28.48 | QP | | | |
| 5 | | 399.5700 | 27.37 | -8.89 | 18.48 | 46.00 | -27.52 | QP | | | |
| 6 | | 510.1500 | 28.07 | -7.72 | 20.35 | 46.00 | -25.65 | QP | | | |

*:Maximum data x:Over limit !:over margin Operator: KK

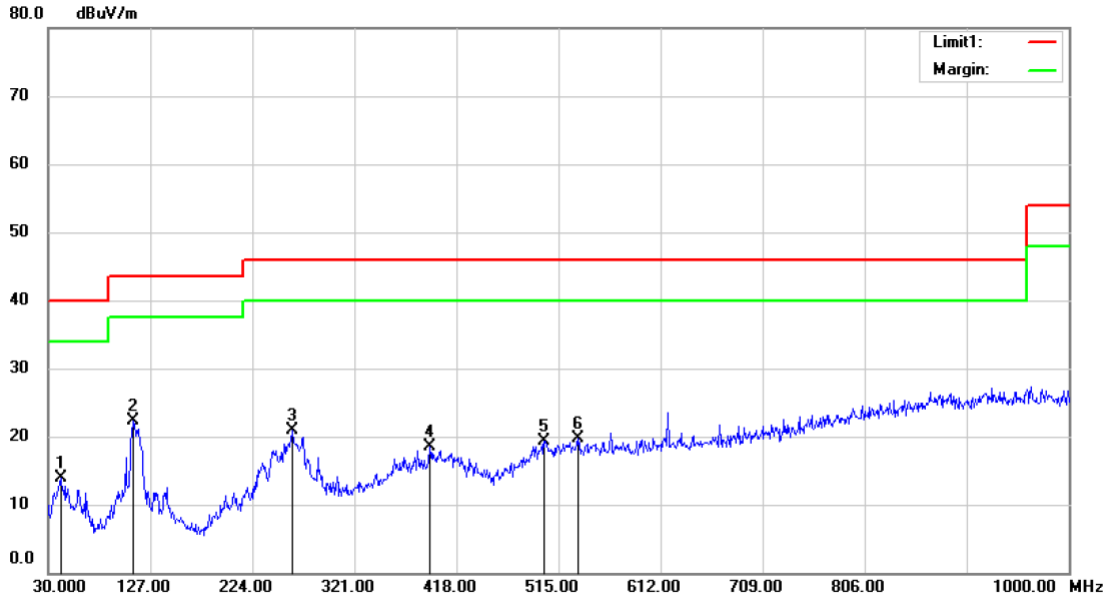


Site 3m Chamber #3 Polarization: ***Horizontal*** Temperature: 24 C

Limit: ( RE)FCC PART 15 CLASS B Power: AC 120V/60Hz Humidity: 53 %

Mode:GFSK TX Channel High

Note:

| No. | Mk. | Freq. | Reading Level | Correct Factor | Measure-ment | Limit | Over | | Antenna Height | Table Degree | |
|---|---|---|---|---|---|---|---|---|---|---|---|
| | | MHz | dBuV | dB | dBuV/m | dBuV/m | dB | Detector | cm | degree | Comment |
| 1 | | 41.6400 | 26.74 | -12.93 | 13.81 | 40.00 | -26.19 | QP | | | |
| 2 | * | 110.5100 | 36.67 | -14.33 | 22.34 | 43.50 | -21.16 | QP | | | |
| 3 | | 261.8300 | 33.61 | -12.77 | 20.84 | 46.00 | -25.16 | QP | | | |
| 4 | | 392.7800 | 27.71 | -9.28 | 18.43 | 46.00 | -27.57 | QP | | | |
| 5 | | 501.4200 | 27.14 | -7.80 | 19.34 | 46.00 | -26.66 | QP | | | |
| 6 | | 533.4300 | 27.28 | -7.53 | 19.75 | 46.00 | -26.25 | QP | | | |

*:Maximum data x:Over limit !:over margin Operator: KK

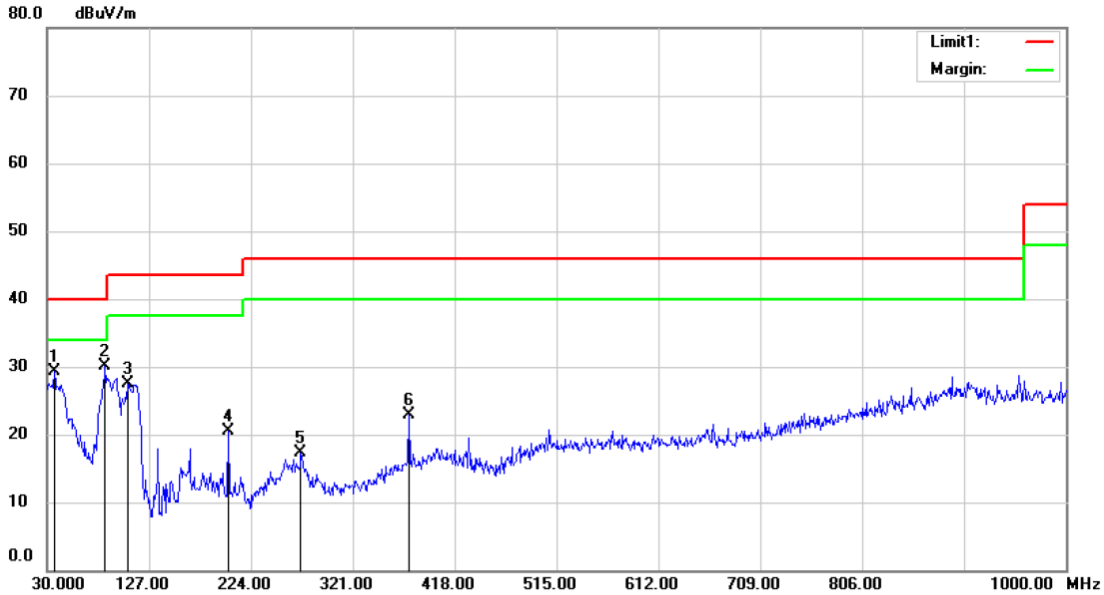


Site 3m Chamber #3 Polarization: ***Vertical*** Temperature: 24 C

Limit: ( RE)FCC PART 15 CLASS B Power: AC 120V/60Hz Humidity: 53 %

Mode:GFSK TX Channel High

Note:

| No. | Mk. | Freq. | Reading Level | Correct Factor | Measure-ment | Limit | Over | | Antenna Height | Table Degree | |
|---|---|---|---|---|---|---|---|---|---|---|---|
| | | MHz | dBuV | dB | dBuV/m | dBuV/m | dB | Detector | cm | degree | Comment |
| 1 | | 36.7900 | 43.40 | -14.09 | 29.31 | 40.00 | -10.69 | QP | | | |
| 2 | * | 85.2900 | 48.47 | -18.41 | 30.06 | 40.00 | -9.94 | QP | | | |
| 3 | | 106.6300 | 41.66 | -14.15 | 27.51 | 43.50 | -15.99 | QP | | | |
| 4 | | 202.6600 | 36.98 | -16.40 | 20.58 | 43.50 | -22.92 | QP | | | |
| 5 | | 271.5300 | 30.00 | -12.67 | 17.33 | 46.00 | -28.67 | QP | | | |
| 6 | | 374.3500 | 33.02 | -10.21 | 22.81 | 46.00 | -23.19 | QP | | | |

*:Maximum data x:Over limit !:over margin Operator: KK

■ Spurious Emission Above 1GHz (1GHz to 25GHz)

| | | | |
|---|---|---|---|
| Temperature : | 28℃ | Test Date : | November 23, 2015 |
| Humidity : | 65 % | Test By: | YXL |
| Test mode: | GFSK | Frequency: | 2404MHz |

| Freq. (MHz) | Ant.Pol. H/V | Emission Level(dBuV/m) PK | AV | Limit 3m(dBuV/m) PK | AV | Over(dB) PK | AV |
|---|---|---|---|---|---|---|---|
| 4853.00 | V | 56.43 | 31.75 | 74.00 | 54.00 | -17.57 | -22.25 |
| 11075.00 | V | 52.24 | 31.66 | 74.00 | 54.00 | -21.76 | -22.34 |
| 13353.00 | V | 52.76 | 34.26 | 74.00 | 54.00 | -21.24 | -19.74 |
| -- | -- | -- | -- | -- | -- | -- | -- |
| -- | -- | -- | -- | -- | -- | -- | -- |
| 4836.00 | H | 58.72 | 42.36 | 74.00 | 54.00 | -15.28 | -11.64 |
| 11398.00 | H | 51.26 | 36.76 | 74.00 | 54.00 | -22.74 | -17.24 |
| 13319.00 | H | 51.65 | 36.96 | 74.00 | 54.00 | -22.35 | -17.04 |

| | | | |
|---|---|---|---|
| Temperature : | 28℃ | Test Date : | November 23, 2015 |
| Humidity : | 65 % | Test By: | YXL |
| Test mode: | GFSK | Frequency: | 2440MHz |

| Freq. (MHz) | Ant.Pol. H/V | Emission Level(dBuV/m) PK | AV | Limit 3m(dBuV/m) PK | AV | Over(dB) PK | AV |
|---|---|---|---|---|---|---|---|
| 4904.00 | V | 58.49 | 34.35 | 74.00 | 54.00 | -15.51 | -19.65 |
| 7318.00 | V | 52.13 | 34.82 | 74.00 | 54.00 | -21.87 | -19.18 |
| 12979.00 | V | 52.99 | 36.81 | 74.00 | 54.00 | -21.01 | -17.19 |
| -- | -- | -- | -- | -- | -- | -- | -- |
| -- | -- | -- | -- | -- | -- | -- | -- |
| 4904.00 | H | 58.54 | 34.26 | 74.00 | 54.00 | -15.46 | -19.74 |
| 7318.00 | H | 55.56 | 33.82 | 74.00 | 54.00 | -18.44 | -20.18 |
| 12826.00 | H | 51.86 | 36.56 | 74.00 | 54.00 | -22.14 | -17.44 |

| | | | |
|---|---|---|---|
| Temperature : | 28℃ | Test Date : | November 23, 2015 |
| Humidity : | 65 % | Test By: | YXL |
| Test mode: | GFSK | Frequency: | 2480MHz |

| Freq. (MHz) | Ant.Pol. H/V | Emission Level(dBuV/m) PK | AV | Limit 3m(dBuV/m) PK | AV | Over(dB) PK | AV |
|---|---|---|---|---|---|---|---|
| 4972.00 | V | 59.04 | 33.15 | 74.00 | 54.00 | -14.96 | -20.85 |
| 7437.00 | V | 57.31 | 34.52 | 74.00 | 54.00 | -16.69 | -19.48 |
| 13948.00 | V | 51.83 | 37.35 | 74.00 | 54.00 | -22.17 | -16.65 |
| -- | -- | -- | -- | -- | -- | -- | -- |
| -- | -- | -- | -- | -- | -- | -- | -- |
| 4938.00 | H | 58.95 | 34.35 | 74.00 | 54.00 | -15.05 | -19.65 |
| 7437.00 | H | 56.90 | 34.82 | 74.00 | 54.00 | -17.10 | -19.18 |
| 13387.00 | H | 53.90 | 36.48 | 74.00 | 54.00 | -20.10 | -17.52 |

**Note:** (1) All Readings are Peak Value (VBW=3MHz) and Peak Value (VBW=10Hz).
(2) Emission Level= Reading Level+Probe Factor +Cable Loss.
(3) Data of measurement within this frequency range shown " -- " in the table above means the reading of emissions are attenuated more than 20dB below the permissible limits or the field strength is too small to be measured.

■ Transmitter Fundamental Field Strength(2400MHz~2483.5MHz)

| | | | |
|---|---|---|---|
| Temperature : | 28℃ | Test Date : | November 23, 2015 |
| Humidity : | 65 % | Test By: | YXL |
| Test mode: | GFSK | Frequency: | 2404MHz |

| Freq. | Ant.Pol. | Emission Level(dBuV/m) | | Limit 3m(dBuV/m) | | Over(dB) | |
|---|---|---|---|---|---|---|---|
| (MHz) | H/V | PK | AV | PK | AV | PK | AV |
| 2404.00 | H | 82.27 | 81.50 | 114.00 | 94.00 | -31.73 | -12.50 |
| -- | -- | -- | -- | -- | -- | -- | -- |
| 2404.00 | V | 76.55 | 75.40 | 114.00 | 94.00 | -37.45 | -18.60 |

| | | | |
|---|---|---|---|
| Temperature : | 28℃ | Test Date : | November 23, 2015 |
| Humidity : | 65 % | Test By: | YXL |
| Test mode: | GFSK | Frequency: | 2440MHz |

| Freq. | Ant.Pol. | Emission Level(dBuV/m) | | Limit 3m(dBuV/m) | | Over(dB) | |
|---|---|---|---|---|---|---|---|
| (MHz) | H/V | PK | AV | PK | AV | PK | AV |
| 2440.00 | H | 82.06 | 81.50 | 114.00 | 94.00 | -31.94 | -12.50 |
| -- | -- | -- | -- | -- | -- | -- | -- |
| 2440.00 | V | 73.90 | 72.80 | 114.00 | 94.00 | -40.10 | -21.20 |

| | | | |
|---|---|---|---|
| Temperature : | 28℃ | Test Date : | November 23, 2015 |
| Humidity : | 65 % | Test By: | YXL |
| Test mode: | GFSK | Frequency: | 2480MHz |

| Freq. | Ant.Pol. | Emission Level(dBuV/m) | | Limit 3m(dBuV/m) | | Over(dB) | |
|---|---|---|---|---|---|---|---|
| (MHz) | H/V | PK | AV | PK | AV | PK | AV |
| 2480.00 | H | 79.72 | 78.50 | 114.00 | 94.00 | -34.28 | -15.50 |
| -- | -- | -- | -- | -- | -- | -- | -- |
| 2480.00 | V | 72.22 | 71.30 | 114.00 | 94.00 | -41.78 | -22.70 |

**Note:** (1) All Readings are Peak Value (VBW=3MHz) and Peak Value (VBW=10Hz).
(2) Emission Level= Reading Level+Probe Factor +Cable Loss.
(3) Data of measurement within this frequency range shown " -- " in the table above means the reading of emissions are attenuated more than 20dB below the permissible limits or the field strength is too small to be measured.

■ Spurious Emission in Restricted Band 2310-2390MHz and 2483.5-2500MHz

| Test Model | Spurious Emission in Restricted Band 2310-2390MHz | |
|---|---|---|
| | GFSK | |
| | Channel 1: 2404MHz | Polarity: H |
| | VBW=3MHz | Test By: YXL |

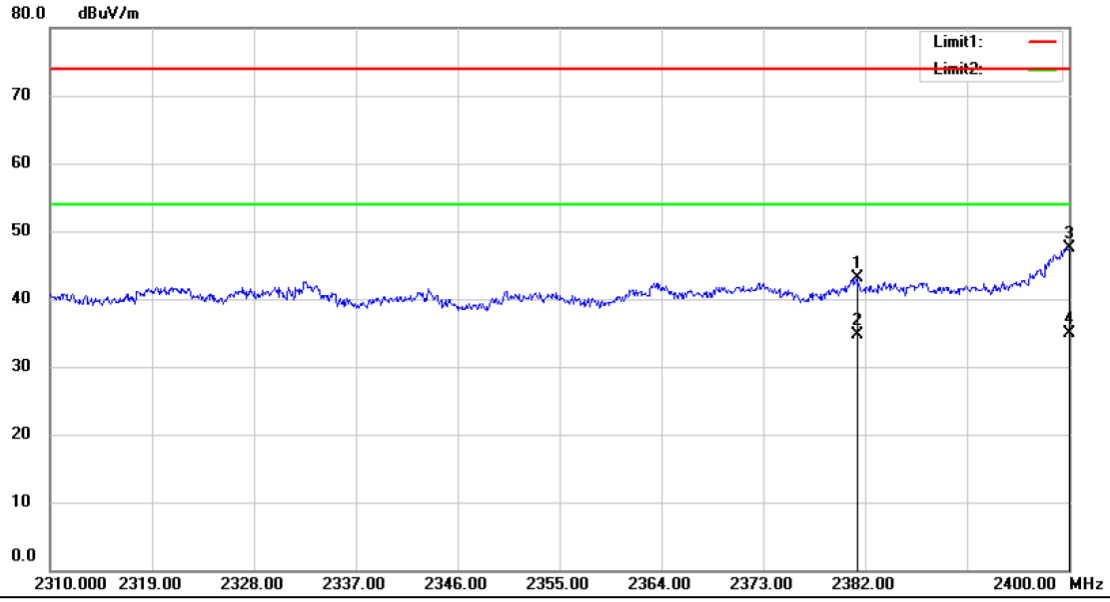


Site 3m Chamber #3 Polarization: ***Horizontal*** Temperature: 24 C

Limit: ( RE)FCC PART 15 SUBPART C Power: AC 120V/60Hz Humidity: 53 %

Mode:GFSK TX Channel Low

Note:

| No. | Mk. | Freq. | Reading Level | Correct Factor | Measure-ment | Limit | Over | | Antenna Height | Table Degree | |
|---|---|---|---|---|---|---|---|---|---|---|---|
| | | MHz | dBuV | dB | dBuV/m | dBuV/m | dB | Detector | cm | degree | Comment |
| 1 | | 2381.280 | 64.90 | -21.87 | 43.03 | 74.00 | -30.97 | peak | | | |
| 2 | | 2381.280 | 56.54 | -21.87 | 34.67 | 54.00 | -19.33 | AVG | | | |
| 3 | | 2400.000 | 69.26 | -21.82 | 47.44 | 74.00 | -26.56 | peak | | | |
| 4 | * | 2400.000 | 56.77 | -21.82 | 34.95 | 54.00 | -19.05 | AVG | | | |

*:Maximum data x:Over limit !:over margin Operator: KK

■

| Test Model | Spurious Emission in Restricted Band 2310-2390MHz | |
|---|---|---|
| | GFSK | |
| | Channel 1: 2404MHz | Polarity: V |
| | VBW=3MHz | Test By: YXL |

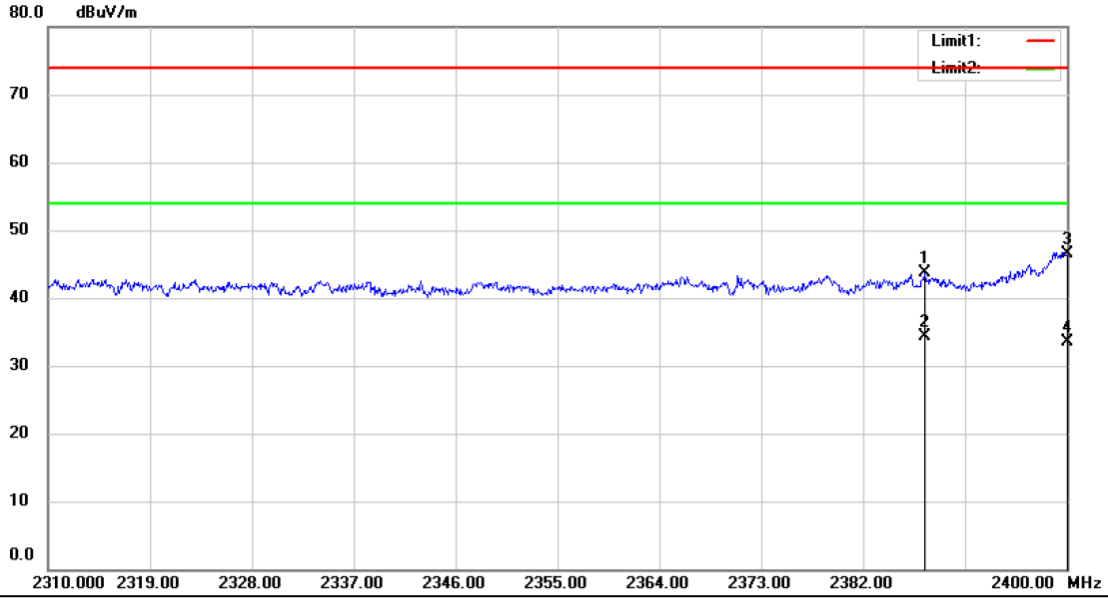


Site 3m Chamber #3 Polarization: ***Vertical*** Temperature: 24 C

Limit: ( RE)FCC PART 15 SUBPART C Power: AC 120V/60Hz Humidity: 53 %

Mode:GFSK TX Channel Low

Note:

| No. | Mk. | Freq. | Reading Level | Correct Factor | Measure-ment | Limit | Over | | Antenna Height | Table Degree | |
|---|---|---|---|---|---|---|---|---|---|---|---|
| | | MHz | dBuV | dB | dBuV/m | dBuV/m | dB | Detector | cm | degree | Comment |
| 1 | | 2387.490 | 65.63 | -21.85 | 43.78 | 74.00 | -30.22 | peak | | | |
| 2 | * | 2387.490 | 56.13 | -21.85 | 34.28 | 54.00 | -19.72 | AVG | | | |
| 3 | | 2400.000 | 68.26 | -21.82 | 46.44 | 74.00 | -27.56 | peak | | | |
| 4 | | 2400.000 | 55.29 | -21.82 | 33.47 | 54.00 | -20.53 | AVG | | | |

*:Maximum data x:Over limit !:over margin Operator: KK

■

| Test Model | Spurious Emission in Restricted Band 2483.5-2500MHz | |
|---|---|---|
| | GFSK | |
| | Channel 34: 2476MHz | Polarity: H |
| | VBW=3MHz | Test By: YXL |

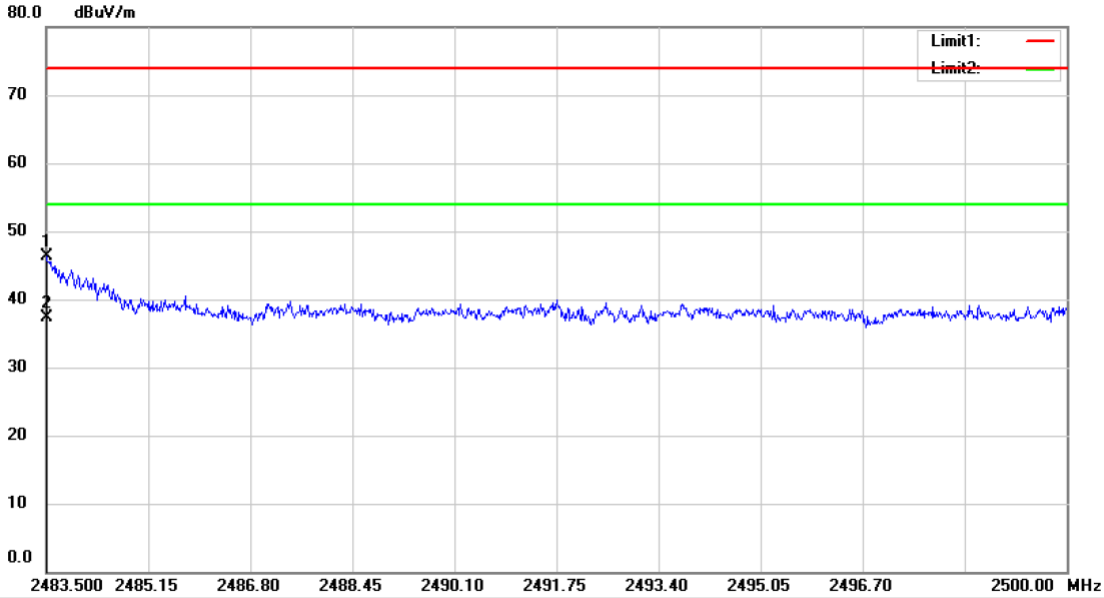


Site 3m Chamber #3 Polarization: ***Horizontal*** Temperature: 24 C

Limit: ( RE)FCC PART 15 SUBPART C Power: AC 120V/60Hz Humidity: 53 %

Mode:GFSK TX Channel High

Note:

| No. | Mk. | Freq. | Reading Level | Correct Factor | Measure-ment | Limit | Over | | Antenna Height | Table Degree | |
|---|---|---|---|---|---|---|---|---|---|---|---|
| | | MHz | dBuV | dB | dBuV/m | dBuV/m | dB | Detector | cm | degree | Comment |
| 1 | | 2483.500 | 69.70 | -23.44 | 46.26 | 74.00 | -27.74 | peak | | | |
| 2 | * | 2483.500 | 60.72 | -23.44 | 37.28 | 54.00 | -16.72 | AVG | | | |

*:Maximum data x:Over limit !:over margin Operator: KK

■

| Test Model | Spurious Emission in Restricted Band 2483.5-2500MHz | |
|---|---|---|
| | GFSK | |
| | Channel 34: 2476MHz | Polarity: H |
| | VBW=3MHz | Test By: YXL |

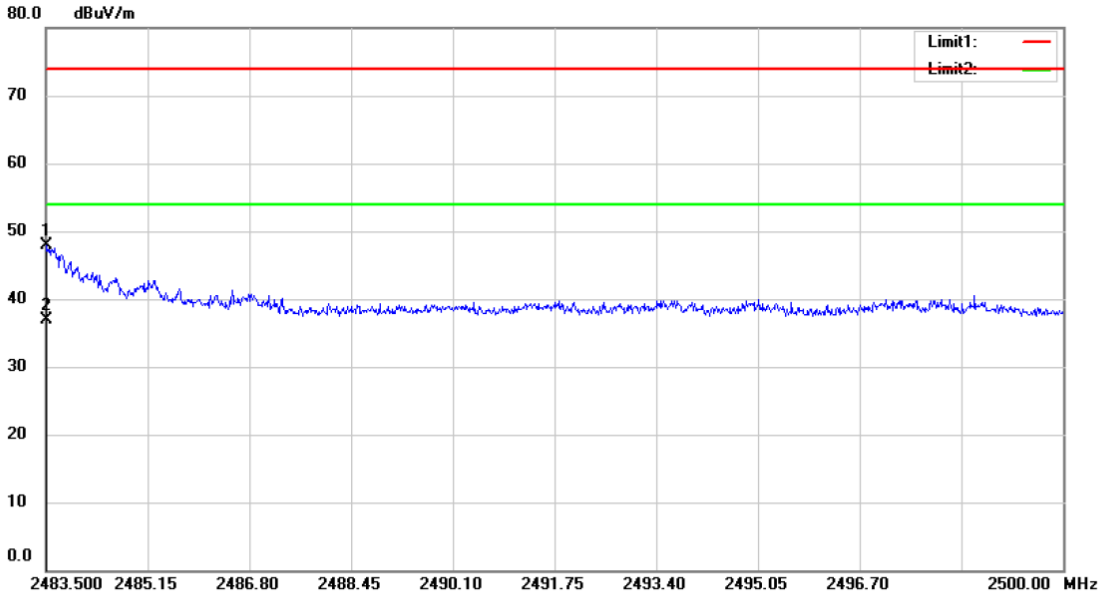


Site 3m Chamber #3 Polarization: *Vertical* Temperature: 24 C

Limit: ( RE)FCC PART 15 SUBPART C Power: AC 120V/60Hz Humidity: 53 %

Mode:GFSK TX Channel High

Note:

| No. | Mk. | Freq. | Reading Level | Correct Factor | Measure-ment | Limit | Over | | Antenna Height | Table Degree | |
|---|---|---|---|---|---|---|---|---|---|---|---|
| | | MHz | dBuV | dB | dBuV/m | dBuV/m | dB | Detector | cm | degree | Comment |
| 1 | | 2483.517 | 71.34 | -23.44 | 47.90 | 74.00 | -26.10 | peak | | | |
| 2 | * | 2483.517 | 60.26 | -23.44 | 36.82 | 54.00 | -17.18 | AVG | | | |

*:Maximum data x:Over limit !:over margin Operator: KK

## 8.3 CONDUCTED EMISSIONS TEST

### 8.3.1 Applicable Standard

According to FCC Part 15.207(a)

### 8.3.2 Conformance Limit

| Conducted Emission Limit | | |
|---|---|---|
| Frequency(MHz) | Quasi-peak | Average |
| 0.15-0.5 | 66-56 | 56-46 |
| 0.5-5.0 | 56 | 46 |
| 5.0-30.0 | 60 | 50 |
| Note: 1. The lower limit shall apply at the transition frequencies<br>2. The limit decreases in line with the logarithm of the frequency in the range of 0.15 to 0.50MHz. | | |

### 8.3.3 Test Configuration

Test according to clause 7.3 conducted emission test setup

### 8.3.4 Test Procedure

The EUT was placed on a table which is 0.8m above ground plane.
Maximum procedure was performed on the highest emissions to ensure EUT compliance.
Repeat above procedures until all frequency measured were complete.

### 8.3.5 Test Results

Pass

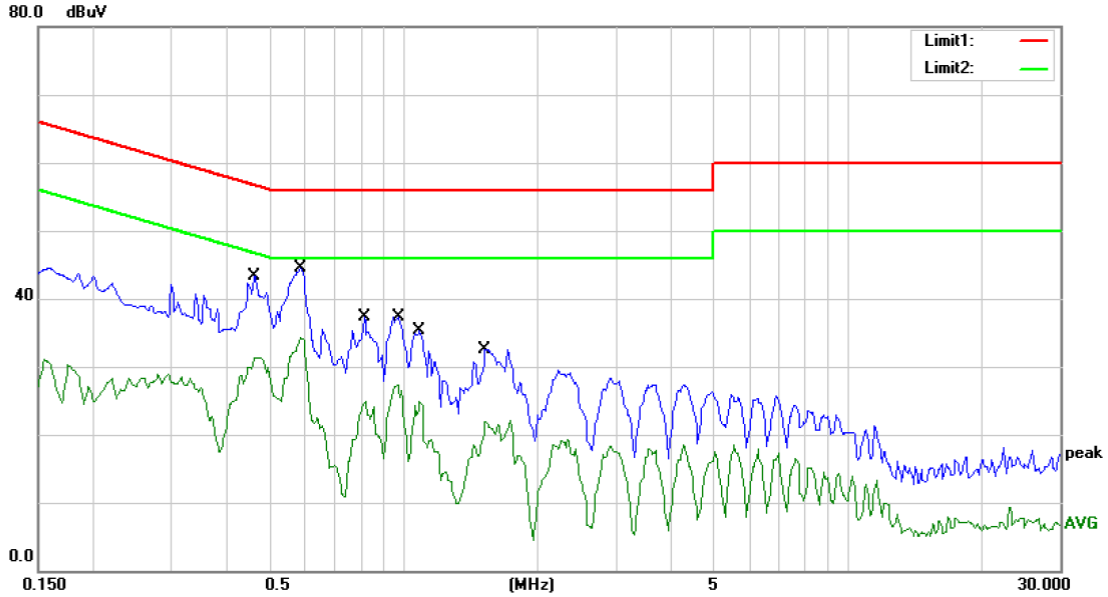


Site Conduction #1 Phase: *L1* Temperature: 22
Limit: (CE)FCC PART 15 class B_QP Power: AC 240V/50Hz Humidity: 50 %
Mode: ON
Note:

| No. | Mk. | Freq. | Reading Level | Correct Factor | Measure-ment | Limit | Over | | |
|---|---|---|---|---|---|---|---|---|---|
| | | MHz | dBuV | dB | dBuV | dBuV | dB | Detector | Comment |
| 1 | | 0.4600 | 43.39 | 0.00 | 43.39 | 56.69 | -13.30 | QP | |
| 2 | | 0.4600 | 31.40 | 0.00 | 31.40 | 46.69 | -15.29 | AVG | |
| 3 | * | 0.5850 | 44.50 | 0.00 | 44.50 | 56.00 | -11.50 | QP | |
| 4 | | 0.5850 | 34.23 | 0.00 | 34.23 | 46.00 | -11.77 | AVG | |
| 5 | | 0.8150 | 37.32 | 0.00 | 37.32 | 56.00 | -18.68 | QP | |
| 6 | | 0.8150 | 24.90 | 0.00 | 24.90 | 46.00 | -21.10 | AVG | |
| 7 | | 0.9700 | 37.38 | 0.00 | 37.38 | 56.00 | -18.62 | QP | |
| 8 | | 0.9700 | 27.26 | 0.00 | 27.26 | 46.00 | -18.74 | AVG | |
| 9 | | 1.0850 | 35.22 | 0.00 | 35.22 | 56.00 | -20.78 | QP | |
| 10 | | 1.0850 | 24.80 | 0.00 | 24.80 | 46.00 | -21.20 | AVG | |
| 11 | | 1.5250 | 32.53 | 0.00 | 32.53 | 56.00 | -23.47 | QP | |
| 12 | | 1.5250 | 21.90 | 0.00 | 21.90 | 46.00 | -24.10 | AVG | |

*:Maximum data x:Over limit !:over margin Comment: Factor build in receiver. Operator: CSL

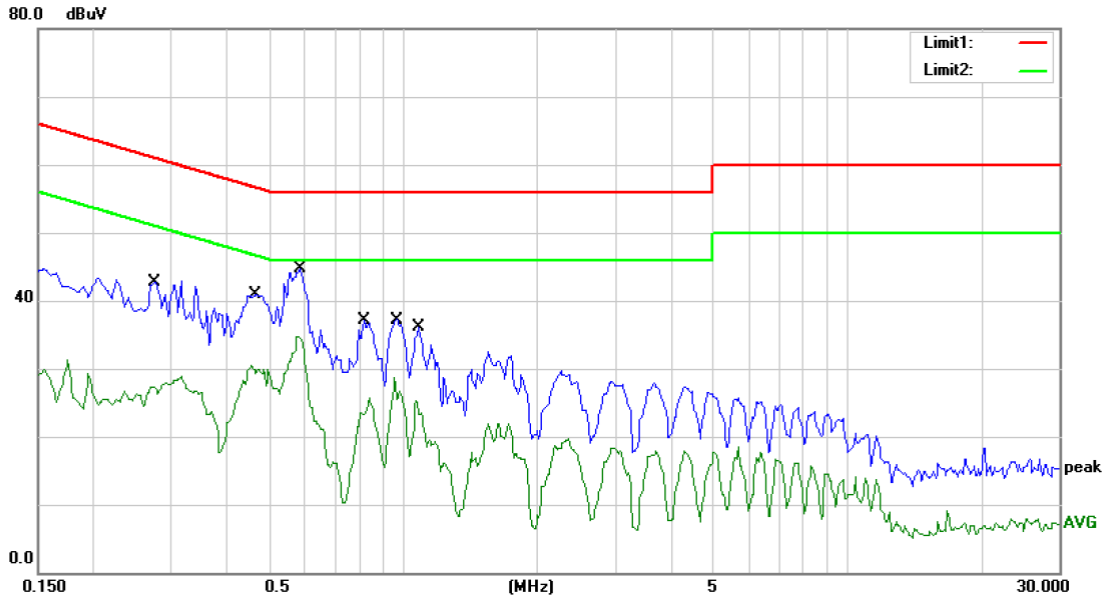


Site Conduction #1 Phase: *N* Temperature: 22
Limit: (CE)FCC PART 15 class B_QP Power: AC 240V/50Hz Humidity: 50 %
Mode: ON
Note:

| No. | Mk. | Freq. | Reading Level | Correct Factor | Measure-ment | Limit | Over | | |
|---|---|---|---|---|---|---|---|---|---|
| | | MHz | dBuV | dB | dBuV | dBuV | dB | Detector | Comment |
| 1 | | 0.2750 | 42.80 | 0.00 | 42.80 | 60.97 | -18.17 | QP | |
| 2 | | 0.2750 | 28.80 | 0.00 | 28.80 | 50.97 | -22.17 | AVG | |
| 3 | | 0.4650 | 40.93 | 0.00 | 40.93 | 56.60 | -15.67 | QP | |
| 4 | | 0.4650 | 30.56 | 0.00 | 30.56 | 46.60 | -16.04 | AVG | |
| 5 | | 0.5850 | 44.64 | 0.00 | 44.64 | 56.00 | -11.36 | QP | |
| 6 | * | 0.5850 | 34.78 | 0.00 | 34.78 | 46.00 | -11.22 | AVG | |
| 7 | | 0.8150 | 37.02 | 0.00 | 37.02 | 56.00 | -18.98 | QP | |
| 8 | | 0.8150 | 25.71 | 0.00 | 25.71 | 46.00 | -20.29 | AVG | |
| 9 | | 0.9650 | 37.20 | 0.00 | 37.20 | 56.00 | -18.80 | QP | |
| 10 | | 0.9650 | 28.73 | 0.00 | 28.73 | 46.00 | -17.27 | AVG | |
| 11 | | 1.0800 | 36.13 | 0.00 | 36.13 | 56.00 | -19.87 | QP | |
| 12 | | 1.0800 | 25.38 | 0.00 | 25.38 | 46.00 | -20.62 | AVG | |

*:Maximum data x:Over limit !:over margin Comment: Factor build in receiver. Operator: CSL

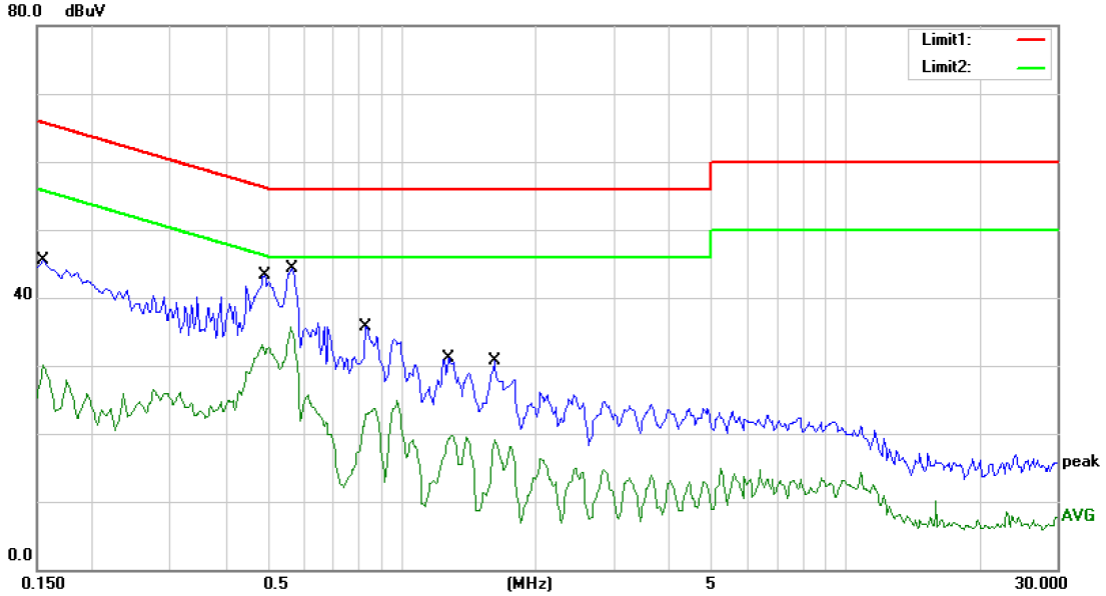


Site Conduction #1 Phase: *L1* Temperature: 22

Limit: (CE)FCC PART 15 class B_QP Power: AC 120V/60Hz Humidity: 50 %

Mode: ON

Note:

| No. | Mk. | Freq. | Reading Level | Correct Factor | Measure-ment | Limit | Over | | |
|---|---|---|---|---|---|---|---|---|---|
| | | MHz | dBuV | dB | dBuV | dBuV | dB | Detector | Comment |
| 1 | | 0.1550 | 45.48 | 0.00 | 45.48 | 65.73 | -20.25 | QP | |
| 2 | | 0.1550 | 30.02 | 0.00 | 30.02 | 55.73 | -25.71 | AVG | |
| 3 | | 0.4900 | 43.27 | 0.00 | 43.27 | 56.17 | -12.90 | QP | |
| 4 | | 0.4900 | 33.10 | 0.00 | 33.10 | 46.17 | -13.07 | AVG | |
| 5 | | 0.5650 | 44.24 | 0.00 | 44.24 | 56.00 | -11.76 | QP | |
| 6 | * | 0.5650 | 35.66 | 0.00 | 35.66 | 46.00 | -10.34 | AVG | |
| 7 | | 0.8300 | 35.69 | 0.00 | 35.69 | 56.00 | -20.31 | QP | |
| 8 | | 0.8300 | 24.94 | 0.00 | 24.94 | 46.00 | -21.06 | AVG | |
| 9 | | 1.2750 | 31.14 | 0.00 | 31.14 | 56.00 | -24.86 | QP | |
| 10 | | 1.2750 | 19.78 | 0.00 | 19.78 | 46.00 | -26.22 | AVG | |
| 11 | | 1.6150 | 30.70 | 0.00 | 30.70 | 56.00 | -25.30 | QP | |
| 12 | | 1.6150 | 19.16 | 0.00 | 19.16 | 46.00 | -26.84 | AVG | |

*:Maximum data x:Over limit !:over margin Comment: Factor build in receiver. Operator: CSL

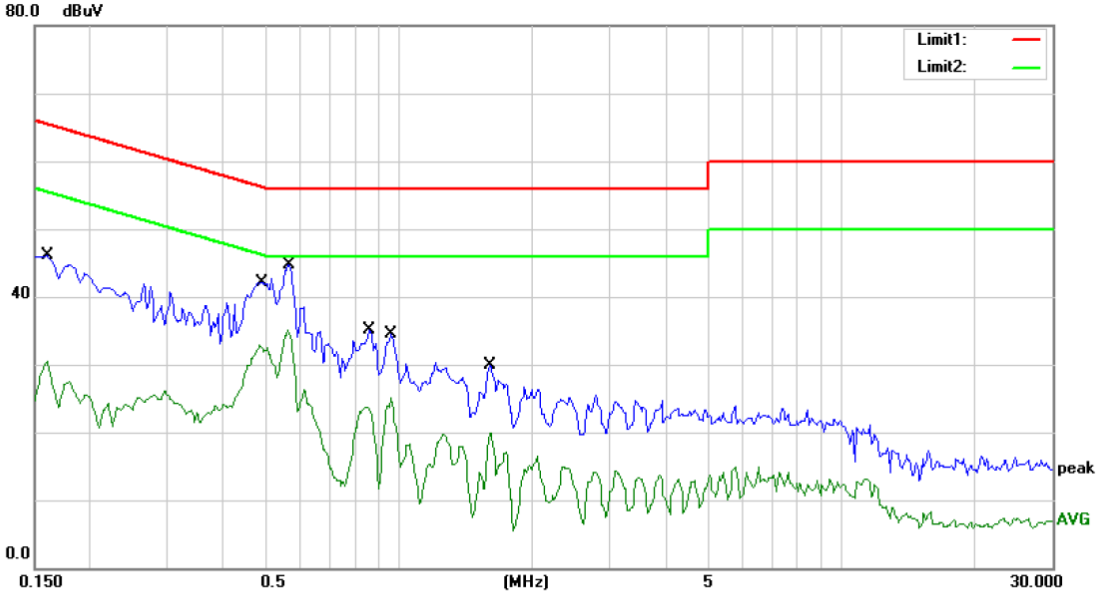


Site Conduction #1 Phase: *N* Temperature: 22

Limit: (CE)FCC PART 15 class B_QP Power: AC 120V/60Hz Humidity: 50 %

Mode: ON

Note:

| No. | Mk. | Freq. | Reading Level | Correct Factor | Measure-ment | Limit | Over | | |
|---|---|---|---|---|---|---|---|---|---|
| | | MHz | dBuV | dB | dBuV | dBuV | dB | Detector | Comment |
| 1 | | 0.1600 | 46.03 | 0.00 | 46.03 | 65.46 | -19.43 | QP | |
| 2 | | 0.1600 | 30.59 | 0.00 | 30.59 | 55.46 | -24.87 | AVG | |
| 3 | | 0.4900 | 42.17 | 0.00 | 42.17 | 56.17 | -14.00 | QP | |
| 4 | | 0.4900 | 32.86 | 0.00 | 32.86 | 46.17 | -13.31 | AVG | |
| 5 | | 0.5650 | 44.75 | 0.00 | 44.75 | 56.00 | -11.25 | QP | |
| 6 | * | 0.5650 | 35.01 | 0.00 | 35.01 | 46.00 | -10.99 | AVG | |
| 7 | | 0.8550 | 35.12 | 0.00 | 35.12 | 56.00 | -20.88 | QP | |
| 8 | | 0.8550 | 23.79 | 0.00 | 23.79 | 46.00 | -22.21 | AVG | |
| 9 | | 0.9600 | 34.46 | 0.00 | 34.46 | 56.00 | -21.54 | QP | |
| 10 | | 0.9600 | 25.06 | 0.00 | 25.06 | 46.00 | -20.94 | AVG | |
| 11 | | 1.6050 | 29.81 | 0.00 | 29.81 | 56.00 | -26.19 | QP | |
| 12 | | 1.6050 | 19.94 | 0.00 | 19.94 | 46.00 | -26.06 | AVG | |

*:Maximum data x:Over limit !:over margin Comment: Factor build in receiver. Operator: CSL

## 8.4 ANTENNA APPLICATION

### 8.4.1 Antenna Requirement

| Standard | Requirement |
|---|---|
| FCC CRF Part 15.203 | An intentional radiator shall be designed to ensure that no antenna other than that furnished by the responsible party shall be used with the device. The use of a permanently attached antenna or of an antenna that uses a unique coupling to the intentional radiator shall be considered sufficient to comply with the provisions of this section. The manufacturer may design the unit so that a broken antenna can be replaced by the user, but the use of a standard antenna jack or electrical connector is prohibited. This requirement does not apply to carrier current devices or to devices operated under the provisions of §15.211, §15.213, §15.217, §15.219, or §15.221. Further, this requirement does not apply to intentional radiators that must be professionally installed, such as perimeter protection systems and some field disturbance sensors, or to other intentional radiators which, in accordance with §15.31(d), must be measured at the installation site. However, the installer shall be responsible for ensuring that the proper antenna is employed so that the limits in this part are not exceeded. |

For intentional device, according to FCC 47 CFR Section 15.203, an intentional radiator shall be designed to ensure that no antenna other than that furnished by the responsible party shall be used with the device.

### 8.4.2 Result

The EUT'S antenna is PCB Antenna, and the antenna can't be replaced by the user, which in accordance to section 15.203, please refer to the internal photos. The antenna's gain is 1dBi and meets the requirement.

END OF REPORT