T E S T R E P O R T
No.: 16-1-0192001T01a

According to:
FCC Regulations
Part 15.225
Part 15.209
IC Regulations
RSS-210, Issue 9
RSS-Gen Issue 4

for

Océ-Technologies B.V.

PBA,RFID_READER
Océ 01087

FCC-ID: 2AGNMOCE01087
IC: 22117-OCE01087

Laboratory Accreditation and Listings			
DAkkS Deutsche Akkreditierungsstelle D-PL-12047-01-01	MRA US-EU 0003	Industry Canada Reg. No.: 3462D-2 Reg. No.: 3462D-3	Voluntary Controls for Electromagnetic Emissions Reg. No.: R-2666 C-2914, T-1967, G-301
AUTHORIZED RF LABORATORY	ctia Authorized™ Test Lab Lab Code: 20011130-00		
accredited according to DIN EN ISO/IEC 17025			

CETECOM GmbH
Laboratory Radio Communications & Electromagnetic Compatibility
Im Teelbruch 116 • 45219 Essen • Germany
Registered in Essen, Germany, Reg. No.: HRB Essen 8984
Tel.: + 49 (0) 20 54 / 95 19-954 • Fax: + 49 (0) 20 54 / 95 19-964
E-mail: info@cetecom.com • Internet: www.cetecom.com

The test results relate only to the individual items which have been tested. This report shall not be reproduced in parts without the written approval of the testing laboratory © Copyright: All rights reserved by CETECOM

TABLE OF CONTENTS

1. SUMMARY OF TEST RESULTS 3

1.1. Tests overview according CFR47, Part 15, Subpart C 3

2. ADMINISTRATIVE DATA 4

2.1. Identification of the testing laboratory 4
2.2. Test location 4
2.3. Organizational items 4
2.4. Applicant's details 4
2.5. Manufacturer's details 4

3. EQUIPMENT UNDER TEST (EUT) 5

3.1. Technical data of main EUT declared by applicant 5
3.2. EUT: Type, S/N etc. and short descriptions used in this test report 5
3.3. Auxiliary Equipment (AE): Type, S/N etc. and short descriptions 6
3.4. EUT set-ups 6
3.5. EUT operating modes 6

4. DESCRIPTION OF TEST SYSTEM SET-UP'S 7

4.1. Test system set-up for conducted measurements on antenna port 7
4.2. Test system set-up for radiated magnetic field measurements below 30 MHz 8
4.3. Test system set-up for radiated electric field measurement 30 MHz to 1 GHz 9

5. MEASUREMENTS 10

5.1. Radiated field strength emission mask at 13.110-14.010MHz 10
5.2. General Limit - Radiated field strength emissions below 30 MHz 11
5.3. General Limit - Radiated field strength emissions, 30 MHz - 1 GHz 13
5.4. Frequency error (tolerance) 15
5.5. Measurement uncertainties 18

6. ACCREDITATION DETAILS OF CETECOM'S LABORATORIES AND TEST SITES 19

7. INSTRUMENTS AND ANCILLARY 20

7.1. Used equiment "CTC" 20

8. VERSIONS OF TEST REPORTS (CHANGE HISTORY) 23

TABLE OF ANNEX

	Total pages
Annex 1: Test result diagrams (separate document) **TR16-1-0192001T01-A1**	23
Annex 3: Photographs of EUT (separate document) **TR16-1-0192001T01-A3**	6
Annex 4: Test set-up photographs (separate document) **TR16-1-0192001T01-A4**	8

1. Summary of test results

The test results apply exclusively to the test samples as presented in this Report. The CETECOM GmbH does not assume responsibility for any conclusions and generalizations taken in conjunction with other specimens or samples of the type of the item presented to tests.

The Equipment Under Test (in this report, hereinafter referred as EUT) is a radio transmitting device with a integrated RFID Transmitter at nominal 13.56MHz.

1.1. Tests overview according CFR47, Part 15, Subpart C

TEST CASES	PORT	REFERENCES & LIMITS		EUT set-up	EUT opera-ting mode	Result
		FCC Standard RSS Standard	TEST LIMIT			
FIELD STRENGTH (radiated in 30m measurement distance) & EMISSION MASK	Cabinet	§2.1046 §15.225 (a)(b) (c)(d) RSS-210 , Issue9	FCC Part 15.225 limits IC: Annex B.6	1	1	Pass
99% OCCUPIED BANDWIDTH	Antenna coupling (radiated)	§2.202 §2.1049 RSS-Gen Issue 4	99% Power IC: Chapter 6.6	3	1	For information only
SPURIOUS EMISSIONS (radiated)	Cabinet + Interconnecting cables (radiated)	§15.209(a) RSS-Gen Issue 4	FCC:2400/F(kHz) µV/m 24000/F(kHz) µV/m 30 µV/m IC: Chapter 8.9	1	1	Pass
FREQUENCY STABILITY	Antenna coupling (radiated)	§2.1055 §15.225(e) RSS-210 , Issue 9	FCC: ±100ppm IC: ±0.01% (±100 ppm).	2	2	Pass
AC-Power Lines Conducted Emissions	AC-Power lines	§15.207 RSS-Gen Issue 4	FCC §15.207 limits IC: Table 4, Chapter 7.2.4	--	--	N/A[1]

N/A[1]: Not applicable, as the EUT is powered via an internal DC power supply.

Digitally signed by christian.lorenz@cetecom.com
DN: cn=christian.lorenz@cetecom.com
Date: 2017.01.02 12:58:49 +01'00'

.....
Dipl.-Ing. Ch. Lorenz
Responsible for test section

Digital unterschrieben von Ajit Phadtare
DN: cn=Ajit Phadtare, o=CETECOM GmbH, ou=RC-EMC, email=ajit.phadtare@cetecom.com, c=DE
Datum: 2017.01.02 11:33:18 +01'00'

.....
MSc. Ajit Phadtare
Responsible for test report

2. Administrative Data

2.1. Identification of the testing laboratory

Company name:	CETECOM GmbH
Address:	Im Teelbruch 116 45219 Essen - Kettwig Germany
Responsible for testing laboratory:	Dipl.-Ing. Rachid Acharkaoui
Deputy:	Dipl.-Ing. Niels Jeß

2.2. Test location

2.2.1. Test laboratory "CTC"

Company name:	see chapter 2.1. Identification of the testing laboratory

2.3. Organizational items

Responsible for test report :	MSc. Ajit Phadtare
Project leader:	Dipl.-Ing N. Perez
Receipt of EUT:	2016-10-08
Date(s) of test:	2016-11-28 to 2016-12-06
Date of report:	2016-12-23
Version of template: 13.02	

2.4. Applicant's details

Applicant's name:	Océ-Technologies B.V.
Address:	St. Urbanusweg 43, 5914 CA Venlo The Netherlands
Contact person:	Mr. Theo Pubben

2.5. Manufacturer's details

Manufacturer's name:	please see Applicant's details
Address:	please see Applicant's details

3. Equipment under test (EUT)

3.1. Technical data of main EUT declared by applicant

Main function	information exchange with a RFID sticker tag mounted on a ink can.		
Type	PBA,RFID_READER		
Frequency range and channels (US/Canada -bands)	13.553 -13.567 MHz		
Type of modulation (packet types)	2-ASK (Amplitude Shift Keying)		
Occupied bandwidth	90.865 kHz		
Number of channels (USA/Canada -bands)	1 nominal channel at 13.56MHz		
Antenna Type	☒ Integrated ☐ External, no RF- connector ☐ External, separate RF-connector		
Antenna Gain	No information from applicant		
MAX Field strength (radiated):	53.10 dBµV/m Peak@30m distance		
FCC-ID	2AGNMOCE1087		
Installed options	--(not tested within this test report)		
Power supply	☒ DC power only: 5 V DC		
Special EMI components	--		
EUT sample type	☐ Production	☒ Pre-Production	☐ Engineering
Firmware		☒ for normal use	☐ Special version for test execution
FCC label attached	☐ yes	☒ no	

3.2. EUT: Type, S/N etc. and short descriptions used in this test report

Short descrip-tion*)	EUT	Type	S/N serial number	HW hardware status	SW software status
EUT A	Océ 01087	PBA,RFID_READER	3515490148	1070063374-01	1070066805 (Firmpack)

*) EUT short description is used to simplify the identification of the EUT in this test report.

3.3. Auxiliary Equipment (AE): Type, S/N etc. and short descriptions

AE short descrip-tion *)	Auxiliary Equipment	Type	S/N serial number	HW hardware status	SW software status
AE 1	RFID Sticker TAG	RI-I03-112A	--	--	--

*) AE short description is used to simplify the identification of the auxiliary equipment in this test report.

3.4. EUT set-ups

EUT set-up no.*)	Combination of EUT and AE	Remarks
set. 1	EUT A + AE 1	Radiated Field Strength Measurements
set. 2	EUT A	Frequency Stability (tolerance) Measurements
set. 3	EUT A + AE 1	Antenna Coupled Bandwidth Measurements

*) EUT set-up no. is used to simplify the identification of the EUT set-up in this test report.

3.5. EUT operating modes

EUT operating mode no.*)	Description of operating modes	Additional information
op. 1	TX-Mode	Continuous modulated TX Mode at 13.56MHz nominal frequency. Duty-Cycle greater than 98%. Nominal operational mode (200 mW , Full Power Mode) with AE 1 used for exchanging the RF information.
op. 2	TX-Mode	Continuous unmodulated TX Mode at 13.56MHz nominal frequency. Duty-Cycle greater than 98%.

*) EUT operating mode no. is used to simplify the test report.

Remark: The product specifications and settings are described in separate document provided by the applicant: PROD SPEC_RFID_READER.DOCX

4. Description of test system set-up's

4.1. Test system set-up for conducted measurements on antenna port

Specification: ANSI 63.10:2013 chapter 6.7

Schematic: In case **an external connector is not available**, the coupling unit consists of a near-field antenna which is connected to the spectrum analyzer.

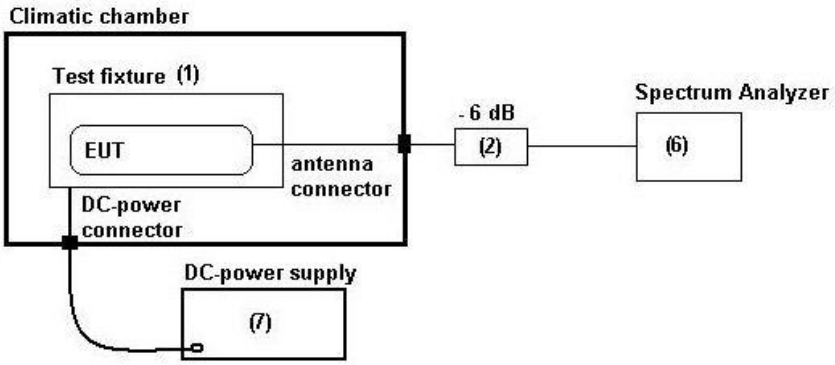

Testing method: ANSI 63.10:2013, Chapter 6.7

4.2. Test system set-up for radiated magnetic field measurements below 30 MHz

Specification: ANSI C63.4-2009 chapter 8.2.1, ANSI C63.10-2013 chapter 6.4

General Description: Evaluating the radiated field emissions are done first by an exploratory emission measurement and a final measurement for most critical frequencies determined.

The loop antenna was placed at 1 m height above ground plane and 3 m measurement distance from set-up for investigations. Because of reduced measurement distance, correction data were applied, as stated in chapter "General Limit - Radiated field strength emissions below 30 MHz". The tests are performed in the semi anechoic room recognized by the regulatory commission.

Schematic:

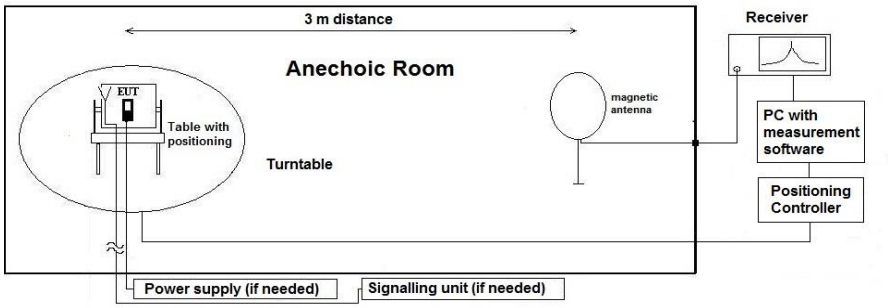

Testing method:

Exploratory, preliminary measurement
The EUT and it's associated accessories are placed on a non-conductive position manipulator (tipping device) of 0.8 m height which is placed on the turntable. By rotating the turntable (step 90°, range 0°to 360°) and the EUT itself either on 3-orthogonal axis (portable equipment) or 2-orthogonal axis (defined operational position of EUT), the emission spectrum was recorded. The loop antenna was moved at least to 2-perpendicular axes (antenna vector in direction of EUT and parallel to EUT) in order to maximize the emissions. The results are documented in a diagram. Critical frequencies (low margin to limit) are saved within a data reduction table for further investigations. If various operating modes are supported, further investigations are made to find the worst-case. Also the interconnection cables and equipment position were varied in order to maximize the emissions.

Final measurement on critical frequencies
Based on the exploratory measurements, the most critical frequencies are re-measured by maintaining the EUT's worst-case operation mode, cable position, etc.

First a frequency zoom around the critical frequency is done to locate the frequency more precisely. After this step, for all identified critical frequencies, the maximum peak was determined.

Following parameters were varied: the turntable angle continuously in the range 0 to 360 degree, the EUT itself either over 3-orthogonal axis (not defined usage position) or 2-orthogonal axis (defined usage position).

On the determined worst-case position, a final measurement with necessary bandwidth and detector according standard has been carried out.

Formula:

$E_C = E_R + AF + C_L + D_F - G_A$

$M = L_T - E_C$

AF =Antenna factor
C_L = Cable loss
D_F= Distance correction factor
E_C = Electrical field – corrected value
E_R = Receiver reading
G_A= Gain of pre-amplifier (if used)
L_T = Limit
M = Margin

All units are dB-units, positive margin means value is below limit.

Distance correction: Reference for applied correction (extrapolating) factors:
IEEC Transaction EMC, Vol. 47, No. 3 , Aug. 2005, Journal Paper
"*Extrapolating Near-field emissions of low frequency loop transmitters".*

4.3. Test system set-up for radiated electric field measurement 30 MHz to 1 GHz

Specification: ANSI C63.4-2009 chapter 8, ANSI C63.10-2013 chapter 6.5

General Description: Evaluating the field emissions have to be done first by an exploratory emissions measurement and a final measurement for most critical frequencies. The tests are performed in a NSA-compliant semi anechoic room (SAR) recognized by the regulatory commissions.

Schematic:

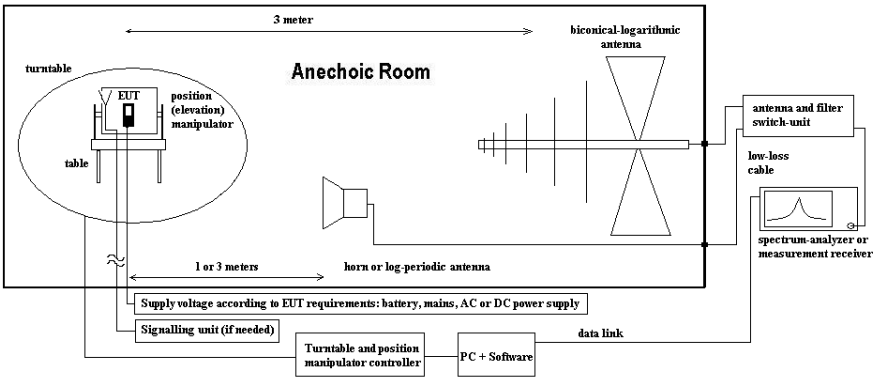

Testing method:

Exploratory, preliminary measurements
The EUT and its associated accessories are placed on a non-conductive position manipulator (tipping device) of 0.8 m height which is placed on the turntable. By rotating the turntable (range 0° to 360°, step 90°) and the EUT itself either on 3-orthogonal axis (portable equipment) or 2-orthogonal axis (defined operational position of EUT) the emission spectrum and it's characteristics was recorded with an EMI-receiver, broadband antenna and software.

Measurement antenna: horizontal and vertical, heights: 1,0 m and 1,82 m as worst-case determined by an exploratory emission measurements. The results are documented in a diagram. Critical frequencies (low margin to limit) are saved within a table for further investigations. If various operating modes are supported, further investigations are made to find the worst-case of them. Also the interconnection cables and equipment position were varied in order to maximize the emissions.

Final measurement on critical frequencies
Based on the exploratory measurements, the most critical frequencies are re-measured by maintaining the EUT's worst-case operation mode, cable position, etc.

First a frequency zoom around the critical frequency is done to locate the frequency more precisely. After this step, for all identified critical frequencies, the maximum peak was determined.

Following parameters were varied: the turntable angle continuously in the range 0 to 360 degree, the EUT itself either over 3-orthogonal axis (not defined usage position) or 2-orthogonal axis (defined usage position). The measurement antenna height between 1 m and 4 m.

On the determined worst-case position, a final measurement with necessary bandwidth and detector according standard has been carried out.

Formula:

$E_C = E_R + AF + C_L + D_F - G_A$ (1)

$M = L_T - E_C$ (2)

AF = Antenna factor
C_L = Cable loss
D_F = Distance correction factor (if used)
E_C = Electrical field – corrected value
E_R = Receiver reading
G_A = Gain of pre-amplifier (if used)
L_T = Limit
M = Margin

All units are dB-units, positive margin means value is below limit.

5. Measurements

5.1. Radiated field strength emission mask at 13.110-14.010MHz

5.1.1.TEST LOCATION AND EQUIPMENT (for reference numbers please see chapter 'List of test equipment')

test location	☒ CETECOM Essen (Chapter. 2.2.1)		☐ Please see Chapter. 2.2.2		☐ Please see Chapter. 2.2.3	
test site	☒ 441 EMI SAR	☐ 487 SAR NSA	☐ 337 OATS	☐ 347 Radio.lab.	☐	☐
receiver	☐ 377 ESCS30	☒ 001 ESS	☐	☐	☐	☐
spectr. analys.	☐ 120 FSEM	☐ 264 FSEK	☐	☐	☐	☐
antenna	☐ 048 EMCO3143	☐ 133 EMCO3115	☐ 302 BBHA9170	☐ 289 CBL 6141	☒ 030 HFH-Z2	☐
power supply	☒ 087 EA 3013S	☐ 457 EA 3013A	☐ 459 EA 2032-50	☐ 268 EA- 3050	☐ 494 AG6632A	☐ 354 NGPE 40
otherwise	☐ 400 FTC40x15E	☐ 401 FTC40x15E	☐ 110 USB LWL	☐ 482 Filter Matrix	☐ 477 GPS	☐

5.1.2. STANDARDS AND LIMITS: CFR 47, §15.225(a)(b)(c)(d) & RSS-210, Issue 9 Annex B.6

Frequency [MHz]	Field strength [µV/m]	Field strength [dBuV/m]	Measurement distance [meters]	Remarks
13.553 -13.567 (allocated band)	15.848	84.00	30	Correction factor used due to measurement distance of 3m
13.410-13.710	334	50.47	30	
13.110-14.010	106	40.50	30	
Outside band 13.110-14.010	30	29.5	30	

5.1.3. TEST CONDITION AND MEASUREMENT TEST SET-UP

link to test system (if used):	☐ air link	☐ cable connection	☒ none
EUT-grounding	☒ none	☐ with power supply	☐ additional connection
Equipment set up	☒ table top		☐ floor standing
Climatic conditions	Temperature: (22±3°C)		Rel. humidity: (40±20)%
EMI-Receiver (Analyzer) Settings	Span/Range: 9kHz to 150kHz; 150 kHz to 30 MHz RBW/VBW: 200Hz/auto; 10 kHz/ auto (ANSI63.10/CISPR#16) Detector/ Mode: PEAK, TRACE max-hold mode, repetitive scan for exploratory measurements Quasi-Peak, for final measurement on critical frequencies (f<1GHz)		

5.1.4. GENERAL MEASUREMENT PROCEDURES:

The measurement test set-up and test procedure are in accordance with the provisions described in ANSI 63.10: 2013
The **Equipment under Test** (EUT) was set-up to defined operating mode and installed (connected) to accessory equipment according the general description of use given by the applicant.

The measurement loop antenna was situated in 3m distance to the EUT. Between EUT and measurement antenna absorbers are covering the GND-Plane. With these absorbers the chamber fulfills CIPR16-1-4 site VSWR-criteria. Radiated magnetic emission measurements were made with the antenna situated in 1 meter height. The loop antenna was moved at least to 2-perpendicular axes (antenna vector in direction of EUT and parallel to EUT) in order to maximize the emissions, the EUT itself either over 3-orthogonal axes (no defined usage position) or 2-orthogonal axis (defined usage position) by the position manipulator.
According the standard the compliance should be checked in 30m measurement distance. Therefore a additional extrapolation factor was used in order to normalize the measurement data. The frequency dependent extrapolation factor used for this reduced measurement distance, can be found in the chapter 5.2.4.1

5.1.5. MEASUREMENT RESULTS: CARRIER FIELD STRENGTH (EMISSION MASK)

Diagram No.	Carrier Channel Range	Carrier Channel No.	Frequency range	Set-up no.	OP-mode no.	Remark	Used detector PK	Used detector AV	Used detector QP	Result
2.01	nominal	1	12 - 15 MHz	1	1	Carrier field strength: 53.10 dBuV/m	☒s	☐	☒	Pass

Remark: *.) see measurement diagrams enclosed in Annex 1 for details

5.1.6. VERDICT: Pass

5.2. General Limit - Radiated field strength emissions below 30 MHz

5.2.1. Test location and equipment

test location	☒ CETECOM Essen (Chapter. 2.2.1)		☐ Please see Chapter. 2.2.2		☐ Please see Chapter. 2.2.3	
test site	☒ 441 EMI SAR	☐ 487 SAR NSA	☐ 347 Radio.lab.		☐	☐
receiver	☐ 377 ESCS30	☒ 001 ESS	☐	☐	☐	☐
spectr. analys.	☐ 584 FSU	☐ 120 FSEM	☐ 264 FSEK	☐	☐	☐
antenna	☐ 574 BTA-L	☐ 133 EMCO3115	☐ 302 BBHA9170	☐ 289 CBL 6141	☒ 030 HFH-Z2	☐ 477 GPS
signaling	☐ 392 MT8820A	☐ 371 CBT32	☐ 547 CMU	☐ 594 CMW		
otherwise	☐ 400 FTC40x15E	☐ 401 FTC40x15E	☐ 110 USB LWL	☐ 482 Filter Matrix	☐ 378 RadiSense	
DC power	☒ 087 EA 3013S	☐ 457 EA 3013A	☐ 459 EA 2032-50	☐ 268 EA- 3050	☐ 494 AG6632A	☐ 498 NGPE 40
line voltage	☐ 230 V 50 Hz via public mains		☐ 060 120 V 60 Hz via PAS 5000			

5.2.2. Requirements

FCC	Part 15, Subpart C, §15.205 & §15.209			
IC	RSS-Gen., Issue 4: Chapter 8.9, Table 5			
ANSI	C63.10-2013			
Frequency [MHz]	Field strength limit [µV/m]	[dBµV/m]	Distance [m]	Remarks
0.009 – 0.490	2400/f (kHz)	67.6 – 20Log(f) (kHz)	300	Correction factor used due to measurement distance of 3 m
0.490 – 1.705	24000/f (kHz)	87.6 – 20Log(f) (kHz)	30	Correction factor used due to measurement distance of 3 m
1.705 – 30	30	29.5	30	Correction factor used due to measurement distance of 3 m

5.2.3. Test condition and test set-up

Signal link to test system (if used):		☐ air link	☐ cable connection	☒ none
EUT-grounding		☒ none	☐ with power supply	☐ additional connection
Equipment set up		☒ table top		☐ floor standing
Climatic conditions		Temperature: (22±3°C)		Rel. humidity: (40±20)%
EMI-Receiver or Analyzer Settings	Scan data	☒ 9 – 150 kHz RBW/VBW = 200 Hz Scan step = 80 Hz ☒ 150 kHz – 30 MHz RBW/VBW = 9 kHz Scan step = 4 kHz ☐ other:		
	Scan-Mode Detector Mode: Sweep-Time	☒ 6 dB EMI-Receiver Mode ☐ 3dB Spectrum analyser Mode Peak (pre-measurement) and Quasi-PK/Average (final if applicable) Repetitive-Scan, max-hold Coupled – calibrated display if continuous signal otherwise adapted to EUT's individual transmission duty-cycle		
General measurement procedures		Please see chapter "Test system set-up radiated magnetic field measurements below 30 MHz"		

5.2.4. Measurement Results

The results are presented below in summary form only. The EUT is put on operation on nominal channel.
Table of measurement results:

Diagram No.	Carrier Channel Range	Frequency range	Set-up no.	OP-mode no.	Remark	Used detector			Result
						PK	AV	QP	
2.02	Nominal	9 kHz-30 MHz	1	1	Carrier on diagram: Not relevant for verdict	☒	☐	☐	Pass

Remark: *.) see measurement diagrams enclosed in Annex 1 for details

5.2.4.1. Correction factors due to reduced meas. distance (f< 30 MHz)

The used correction factors when the measurement distance is reduced compared to regulatory measurement distance, are calculated according Extrapolation formulas valid for EUT's with maximum dimension of 0.625xLambda. Formula 2+3+4 as presented in ANSI C63.10, Chapter 6.4.4 are used for the calculations of proper extrapolation factors.

Frequency -Range	f [kHz/MHz]	Lambda [m]	Far-Field Point [m]	Distance Limit accord. 15.209 [m]	1st Condition (dmeas< $D_{near-field}$)	2'te Condition (Limit distance bigger $d_{near-field}$)	Distance Correction accord. Formula
kHz	9,00E+03	33333,33	5305,17	300	fullfilled	not fullfilled	-80,00
	1,00E+04	30000,00	4774,65		fullfilled	not fullfilled	-80,00
	2,00E+04	15000,00	2387,33		fullfilled	not fullfilled	-80,00
	3,00E+04	10000,00	1591,55		fullfilled	not fullfilled	-80,00
	4,00E+04	7500,00	1193,66		fullfilled	not fullfilled	-80,00
	5,00E+04	6000,00	954,93		fullfilled	not fullfilled	-80,00
	6,00E+04	5000,00	795,78		fullfilled	not fullfilled	-80,00
	7,00E+04	4285,71	682,09		fullfilled	not fullfilled	-80,00
	8,00E+04	3750,00	596,83		fullfilled	not fullfilled	-80,00
	9,00E+04	3333,33	530,52		fullfilled	not fullfilled	-80,00
	1,00E+05	3000,00	477,47		fullfilled	not fullfilled	-80,00
	1,25E+05	2400,00	381,97		fullfilled	not fullfilled	-80,00
	2,00E+05	1500,00	238,73		fullfilled	fullfilled	-78,02
	3,00E+05	1000,00	159,16		fullfilled	fullfilled	-74,49
	4,00E+05	750,00	119,37		fullfilled	fullfilled	-72,00
	4,90E+05	612,24	97,44		fullfilled	fullfilled	-70,23
	5,00E+05	600,00	95,49	30	fullfilled	not fullfilled	-40,00
	6,00E+05	500,00	79,58		fullfilled	not fullfilled	-40,00
	7,00E+05	428,57	68,21		fullfilled	not fullfilled	-40,00
	8,00E+05	375,00	59,68		fullfilled	not fullfilled	-40,00
	9,00E+05	333,33	53,05		fullfilled	not fullfilled	-40,00
MHz	1,00	300,00	47,75		fullfilled	not fullfilled	-40,00
	1,59	188,50	30,00		fullfilled	not fullfilled	-40,00
	2,00	150,00	23,87		fullfilled	fullfilled	-38,02
	3,00	100,00	15,92		fullfilled	fullfilled	-34,49
	4,00	75,00	11,94		fullfilled	fullfilled	-32,00
	5,00	60,00	9,55		fullfilled	fullfilled	-30,06
	6,00	50,00	7,96		fullfilled	fullfilled	-28,47
	7,00	42,86	6,82		fullfilled	fullfilled	-27,13
	8,00	37,50	5,97		fullfilled	fullfilled	-25,97
	9,00	33,33	5,31		fullfilled	fullfilled	-24,95
	10,00	30,00	4,77		fullfilled	fullfilled	-24,04
	10,60	28,30	4,50		fullfilled	fullfilled	-23,53
	11,00	27,27	4,34		fullfilled	fullfilled	-23,21
	12,00	25,00	3,98		fullfilled	fullfilled	-22,45
	13,56	22,12	3,52		fullfilled	fullfilled	-21,39
	15,00	20,00	3,18		fullfilled	fullfilled	-20,51
	15,92	18,85	3,00		fullfilled	fullfilled	-20,00
	17,00	17,65	2,81		not fullfilled	fullfilled	-20,00
	18,00	16,67	2,65		not fullfilled	fullfilled	-20,00
	20,00	15,00	2,39		not fullfilled	fullfilled	-20,00
	21,00	14,29	2,27		not fullfilled	fullfilled	-20,00
	23,00	13,04	2,08		not fullfilled	fullfilled	-20,00
	25,00	12,00	1,91		not fullfilled	fullfilled	-20,00
	27,00	11,11	1,77		not fullfilled	fullfilled	-20,00
	29,00	10,34	1,65		not fullfilled	fullfilled	-20,00
	30,00	10,00	1,59		not fullfilled	fullfilled	-20,00

5.3. General Limit - Radiated field strength emissions, 30 MHz - 1 GHz

5.3.1. Test location and equipment

test location	☒ CETECOM Essen (Chapter. 2.2.1)		☐ Please see Chapter. 2.2.2		☐ Please see Chapter. 2.2.3	
test site	☒ 441 EMI SAR	☒ 487 SAR NSA				
receiver	☐ 377 ESCS30	☒ 001 ESS	☐ 489 ESU 40	☐ 620 ESU 26		
spectr. analys.	☐ 584 FSU	☐ 120 FSEM	☐ 264 FSEK			
antenna	☒ 574 BTA-L	☐ 133 EMCO3115	☐ 302 BBHA9170	☐ 289 CBL 6141	☐ 030 HFH-Z2	☐ 477 GPS
signaling	☐ 392 MT8820A	☐ 371 CBT32	☐ 547 CMU	☐ 594 CMW		
otherwise	☐ 400 FTC40x15E	☐ 401 FTC40x15E	☐ 110 USB LWL	☒ 482 Filter Matrix		
DC power	☒ 087 EA 3013S	☐ 457 EA 3013A	☐ 459 EA 2032-50	☐ 268 EA- 3050	☐ 494 AG6632A	☐ 498 NGPE
line voltage	☐ 230 V 50 Hz via public mains		☐ 060 120 V 60 Hz via PAS 5000			

5.3.2. Requirements/Limits

FCC		☐ Part 15 Subpart B, §15.109, class B ☒ Part 15 Subpart C, §15.209 @ frequencies defined in §15.205	
IC		☒ RSS-Gen., Issue 4, Chapter 8.9, Table 4	
ANSI		☐ C63.4-2009 ☒ C63.10-2013	
Limit	Frequency [MHz]	Radiated emissions limits, 3 meters	
		QUASI Peak [µV/m]	QUASI-Peak [dBµV/m]
	30 - 88	100	40.0
	88 - 216	150	43.5
	216 - 960	200	46.0
	above 960	500	49.0

5.3.3. Restricted bands of operation, §15.205

MHz	MHz	MHz	GHz
0.090-0.110	16.42-16.423	399.9-410	4.5-5.15
0.495-0.505	16.69475-16.69525	608-614	5.35-5.46
2.1735-2.1905	16.80425-16.80475	960-1240	7.25-7.75
4.125-4.128	25.5-25.67	1300-1427	8.025-8.5
4.20725-4.20775	37.5-38.25	1645.5-1646.5	9.3-9.5
6.215-6.218	73-74.6	1660-1710	10.6-12.7
6.26775-6.26825	74.8-75.2	1718.8-1722.2	13.25-13.4
6.31175-6.31225	108-121.94	2200-2300	14.47-14.5
8.291-8.294	123-138	2310-2390	15.35-16.2
8.362-8.366	149.9-150.05	2483.5-2500	17.7-21.4
8.37625-8.38675	156.52475-156.52525	2690-2900	22.01-23.12
8.41425-8.41475	156.7-156.9	3260-3267	23.6-24.0
12.29-12.293	162.0125-167.17	3332-3339	31.2-31.8
12.51975-12.52025	167.72-173.2	3345.8-3358	36.43-36.5
12.57675-12.57725	240-285	3600-4400	--
13.36-13.41	322-335.4	--	--
Remark: only spurious emissions are allowed within these frequency bands not exceeding the limits per §15.209			

5.3.4. Test condition and measurement test set-up

Signal link to test system (if used):	☐ air link	☐ cable connection	☒ none
EUT-grounding	☒ none	☐ with power supply	☐ additional connection
Equipment set up	☒ table top 0.8m height		☐ floor standing
Climatic conditions	Temperature: (22±3°C)		Rel. humidity: (40±20)%
EMI-Receiver (Analyzer) Settings	Scan frequency range: Scan-Mode Detector RBW/VBW Mode: Scan step Sweep-Time	☒ 30 – 1000 MHz ☐ other: ☒ 6 dB EMI-Receiver Mode ☐ 3 dB spectrum analyser mode Peak / Quasi-peak 100 kHz/300 kHz Repetitive-Scan, max-hold 80 kHz Coupled – calibrated display if continuous tx-signal otherwise adapted to EUT's individual duty-cycle	
General measurement procedures	Please see chapter "Test system set-up for electric field measurement in the range 30 MHz to 1 GHz"		

5.3.5. MEASUREMENT RESULTS

The results are presented below in summary form only. For more information please see diagrams.

Table of measurement results:

Dia-gram no.	Carrier Channel Range	Frequency range	Set-up no.	OP-mode no.	Remark	Used detector			Result
						PK	AV	QP	
3.01	Nominal	30 MHz – 1 GHz	1	1	--	☒	☐	☒	Pass

Remark: *.) see measurement diagram enclosed in Annex 1 for details

5.4. Frequency error (tolerance)

5.4.1. Test location and equipment (for reference numbers please see chapter 'List of test equipment')

test location	☒ CETECOM Essen (Chapter. 2.2.1)		☐ Please see Chapter. 2.2.2		☐ Please see Chapter. 2.2.3	
test site	☐ 441 EMI SAR	☐ 487 SAR NSA	☐ 337 OATS	☒ 347 Radio.lab.	☐	☐
receiver	☐ 377 ESCS30	☐ 001 ESS	☐	☐	☐	☐
spectr. analys.	☒ 489 ESU40	☐ 584 FSU8	☐	☐	☐	☐
antenna	☐ 048 EMCO3143	☐ 133 EMCO3115	☐ 302 BBHA9170	☐ 289 CBL 6141	☒ 030 HFH-Z2	☒ 431 Model 7405
signaling	☐ 298 CMU	☐ 460 CMU	☐ 295 RACAL	☐ 392 MT8820A	☐	☐
power supply	☐ 456 EA 3013A	☐ 457 EA 3013A	☐ 459 EA 2032-50	☐ 268 EA- 3050	☐ 494 AG6632A	☒ 498 NGPE 40
otherwise	☐ 331 HC4055	☐ 401 FTC40x15E	☐ 627 OPUS1		☐ 477 GPS	☐

5.4.2. Standards and Limits: CFR 47, §15.225, ANSI 63.10: 2013 & RSS-210, Issue 9 Annex B.6

Frequency [MHz]	Frequency tolerance			Remarks
	[%]	[ppm]	[Hz]	
13.553 -13.567	±0.01	±100	±1356.7	

5.4.3. TEST SET-UP

A sniffer antenna acts like a coupling antenna for measuring the fundamental frequency. This is placed closed the equipment which is situated inside an climatic chamber. Also connecting cables at the equipment are avoided on the extent possible in order not to degrade the resonance frequency of the equipment and integral antenna.

5.4.4. EQUIPMENT SETTINGS

The measurements is made on nominal carrier frequency within operational band. Further settings on the Spectrum-analyser can be checked on the screenshots attached.

5.4.5. TEST METHOD

A trace with max-hold function was recorded. The maximum peak within the span was found, then the frequency deviation was recorded with the build-in frequency counter within the spectrum-analyser ESU40 to minimize the measurement uncertainty.

The frequency deviation was recorded at switching on point of the equipment and on 2 minutes, 5 minutes and 10 minutes after at in accordance with ANSI 63.10: 2013, Chapter 6.8
All measurements data in graphical format are enclosed in annex 1.

Positive tolerance means that actual frequency is lower than the nominal frequency.
Negative tolerance means that actual frequency is higher than the nominal frequency.

5.4.5.1. Frequency shift of carrier against temperature at constant power supply voltage

1.) Use a full loaded battery for tests according this chapter
2.) determine the carrier frequency at room temperature and nominal voltage [20°C] after a long run of the device equipment (EUT). This frequency is taken as reference for all other measured frequencies.
3.) Perform the carrier frequencies measurements in 10°C increments from 50°C down to -20°C as required by the standards. The stabilization period was about 1 hour after thermal reach of the required temperature.

5.4.5.1.1. Results

Temperature Variation at Nominal Primary Supply Voltage

Frequency error (tolerance) §15.225		Set- up no.2		EUT OP-mode no. 1	
Nominal Conditions					
Vnom = 5.0V DC Tnom = 21°C	Reference frequency	13.5593943 MHz	Limit-> ±100ppm:	1355.93943	Hz
Extreme Conditions					
Temperature	**Measurement period after power-up the EUT**	**Frequency measured**	**Frequency Error**		
		[MHz]	**[Hz]**	**[%]**	**[ppm]**
Tmax=50°C	on StartUp	13.5593333	61.0000000	0.000450	4.50
	2 Minutes	13.5593191	75.2000000	0.000555	5.55
	5 Minutes	13.5593151	79.2000000	0.000584	5.84
	10 Minutes	13.5593121	82.2000000	0.000606	6.06
T=40°C	on StartUp	13.5593699	24.4000000	0.000180	1.80
	2 Minutes	13.5593439	50.4000000	0.000372	3.72
	5 Minutes	13.5593379	56.4000000	0.000416	4.16
	10 Minutes	13.5593333	61.0000000	0.000450	4.50
T=30°C	on StartUp	13.5594272	-32.9000000	-0.000243	-2.43
	2 Minutes	13.5594034	-9.1000000	-0.000130	-0.67
	5 Minutes	13.5593942	0.1000000	0.000001	0.01
	10 Minutes	13.5593873	7.0000000	0.000052	0.52
T=10°C	on StartUp	13.5593101	84.2000000	0.000621	6.21
	2 Minutes	13.5594491	-54.8000000	-0.000404	-4.04
	5 Minutes	13.5594426	-48.3000000	-0.000356	-3.56
	10 Minutes	13.5594395	-45.2000000	-0.000333	-3.33
T=0°C	StartUp	13.5595013	-107.0000000	-0.000789	-7.89
	2 Minutes	13.5594936	-99.3000000	-0.000732	-7.32
	5 Minutes	13.5594883	-94.0000000	-0.000693	-6.93
	10 Minutes	13.5594841	-89.8000000	-0.000662	-6.62
T=-10°C	StartUp	13.5595117	-117.4000000	-0.000866	-8.66
	2 Minutes	13.5595145	-120.2000000	-0.000886	-8.86
	5 Minutes	13.5595130	-118.7000000	-0.000875	-8.75
	10 Minutes	13.5595106	-116.3000000	-0.000858	-8.58
T=-20°C	StartUp	13.5595141	-119.8000000	-0.000884	-8.83
	2 Minutes	13.5595142	-119.9000000	-0.000884	-8.84
	5 Minutes	13.5595143	-120.0000000	-0.000885	-8.85
	10 Minutes	13.5595143	-120.0000000	-0.000885	-8.85

Remark: *.) see measurement diagram enclosed in Annex 1 for details

Variation in the Supply Voltage at Temperature of 20°C

Frequency error (tolerance) §15.225		Set- up no.2		EUT OP-mode no. 1	
Nominal Conditions					
Vnom = 5.0V DC Tnom = 21°C	Reference frequency	13.5593943 MHz	Limit-> ±100ppm:	1355.93943	Hz
Extreme Voltage Conditions of Rated Primary Supply Voltage					
Supply Voltage	**Measurement period after power-up the EUT**	**Frequency measured**	**Frequency Error**		
		[MHz]	**[Hz]**	**[%]**	**[ppm]**
85% of Rated Supply Voltage 4.25 V DC	on StartUp	13.5593535	40.8000000	0.000301	3.01
115% of Rated Supply Voltages 5.75 V DC	on StartUp	13.5593034	90.9000000	0.000670	6.70

Remark: *.) see measurement diagram enclosed in Annex 1 for details

VERDICT: Pass

5.5. Measurement uncertainties

The reported uncertainties are calculated based on the standard uncertainty multiplied with the appropriate coverage factor **k**, such that a confidence level of approximately 95% is achieved. For uncertainty determination, each component used in the concrete measurement set-up was taken in account and it contribution to the overall uncertainty according it's statistical distribution calculated.

RF-Measurement	Reference	Frequency range	Calculated uncertainty based on a confidence level of 95%	Remarks
Conducted emissions (U_{CISPR})	CISPR 16-2-1	9 kHz - 150 kHz 150 kHz - 30 MHz	4.0 dB 3.6 dB	-
Radiated emissions Enclosure	CISPR 16-2-3	30 MHz - 1 GHz 1 GHz - 18 GHz	4.2 dB 5.1 dB	E-Field
Disturbance power	CISPR 16-2-2	30 MHz - 300 MHz	-	-
Power Output radiated	-	30 MHz - 4 GHz	3.17 dB	Substitution
Power Output conducted	-	9 kHz - 20 GHz	1.0 dB	-
Conducted emissions on antenna ports	-	9 kHz - 20 GHz 20 GHz - 40 GHz	1.0 dB	-
Occupied bandwidth	-	9 kHz - 4 GHz	0.1272 ppm (Delta Marker) 1.0 dB	Frequency error Power
Emission bandwidth	- -	9 kHz - 4 GHz	0.1272 ppm (Delta Marker) 1.0 dB	Frequency error Power
Frequency stability	-	9 kHz - 20 GHz	0.0636 ppm	-
Radiated emissions Enclosure	-	150 kHz - 30 MHz 30 MHz - 1 GHz 1 GHz - 20 GHz	5.0 dB 4.2 dB 3.17 dB	Magnetic field E-field Substitution

Table: measurement uncertainties, valid for conducted/radiated measurements

6. Accreditation details of CETECOM's laboratories and test sites

Ref.-No.	Accreditation Certificate	Valid for laboratory area or test site	Accreditation Body
-	D-PL-12047-01-01	All laboratories and test sites of CETECOM GmbH, Essen	DAkkS, Deutsche Akkreditierungsstelle GmbH
337 487 558 348 348	MRA US-EU 0003	Radiated Measurements 30 MHz to 1 GHz, 3 m / 10 m (OATS) Radiated Measurements 30 MHz to 1 GHz, 3 m (SAR) Radiated Measurements above 1 GHz, 3 m (FAR) Mains Ports Conducted Interference Measurements Telecommunication Ports Conducted Interference Measurem.	FCC, Federal Communications Commission Laboratory Division, USA
337 487 550 558	3462D-1 3462D-2 3462D-2 3462D-3	Radiated Measurements 30 MHz to 1 GHz, 3 m / 10 m (OATS) Radiated Measurements 30 MHz to 1 GHz, 3 m (SAR) Radiated Measurements 1 GHz to 6 GHz, 3 m (SAR) Radiated Measurements above 1 GHz, 3 m (FAR)	IC, Industry Canada Certification and Engineering Bureau
487 550 348 348	R-2666 G-301 C-2914 T-1967	Radiated Measurements 30 MHz to 1 GHz, 3 m (SAR) Radiated Measurements 1 GHz to 6 GHz, 3 m (SAR) Mains Ports Conducted Interference Measurements Telecommunication Ports Conducted Interference Measurem.	VCCI, Voluntary Control Council for Interference by Information Technology Equipment, Japan
OATS = Open Area Test Site, SAR = Semi Anechoic Room, FAR = Fully Anechoic Room			

7. Instruments and Ancillary

7.1. Used equiment "CTC"

The "Ref.-No" in the left column of the following tables allows the clear identification of the laboratory equipment.

7.1.1. Test software and firmware of equipment

Ref.-No.	Equipment	Type	Serial-No.	Version of Firmware or Software during the test
001	EMI Test Receiver	ESS	825132/017	Firm.= 1.21 , OTP=2.0, GRA=2.0
012	Signal Generator (EMS-cond.)	SMY 01	839069/027	Firm.= V 2.02
013	Power Meter (EMS cond.)	NRVD	839111/003	Firm.= V 1.51
017	Digital Radiocommunication Tester	CMD 60 M	844365/014	Firmware = V 3.52 .22.01.99, DECT = D2.87 13.01.99
053	Audio Analyzer	UPA3	860612/022	Firm. V 4.3
119	RT Harmonics Analyzer dig. Flickermeter	B10	G60547	Firm.= V 3.1DHG
140	Signal Generator	SMHU	831314/006	Firm.= 3.21
261	Thermal Power Sensor	NRV-Z55	825083/0008	EPROM-Datum 02.12.04, SE EE 1 B
262	Power Meter	NRV-S	825770/0010	Firm.= 2.6
263	Signal Generator	SMP 04	826190/0007	Firm.=3.21
264	Spectrum Analyzer	FSEK 30	826939/005	Bios=2.1, Analyzer= 3.20
295	Racal Digital Radio Test Set	6103	1572	UNIT Firmware= 4.04, SW-Main=4.04, SW-BBP=1.04, SW-DSP=1.02, Hardboot=1.02, Softboot=2.02
298	Univ. Radio Communication Tester	CMU 200	832221/091	R&S Test Firmware =3.53 /3.54 (current Testsoftw. f. all band used
323	Digital Radiocommunication Tester	CMD 55	825878/0034	Firm.= 3.52 .22.01.99
331	Climatic Test Chamber -40/+80 Grad	HC 4055	43146	TSI 1.53
335	CTC-EMS-Conducted	System EMS Conducted	-	EMC 32 V 8.52
340	Digital Radiocommunication Tester	CMD 55	849709/037	Firm.= 3.52 .22.01.99
355	Power Meter	URV 5	891310/027	Firm.= 1.31
365	10V Insertion Unit 50 Ohm	URV5-Z2	100880	Eprom Data = 31.03.08
366	Ultra Compact Simulator	UCS 500 M4	V0531100594	Firm. UCS 500=001925/3.06a02, rc=ISMIEC 4.10
371	Bluetooth Tester	CBT32	100153	CBT V5,30+ SW-Option K55, K57
377	EMI Test Receiver	ESCS 30	100160	Firm.= 2.30, OTP= 02.01, GRA= 02.36
378	Broadband RF Field Monitor	RadiSense III	03D00013SNO-08	Firm.= V.03D13
389	Digital Multimeter	Keithley 2000	0583926	Firm. = A13 (Mainboard) A02 (Display)
392	Radio Communication Tester	MT8820A	6K00000788	Firm.= 4.50 #005, IPL=4.01#001,OS=4.02#001, GSM=4.41#013, W-CDMA= 4.54#004, scenario= 4.52#002
436	Univ. Radio Communication Tester	CMU 200	103083	R&S Test Firmware Base=5.14, Mess-Software= GSM:5.14 WCDMA:5.14 (current Testsoftw. F. all band
441	CTC-SAR-EMI Cable Loss	System EMI field (SAR)	-	EMC 32 Version 8.52
442	CTC-SAR-EMS	System EMS field (SAR)	-	EMC 32 Version 8.40
443	CTC-FAR-EMI-RSE	System CTC-FAR-EMI-RSE	-	Spuri 7.2.5 or EMC 32 Ver. 9.15.00
444	CTC-FAR-EMS field	System-EMS-Field (FAR)	-	EMC 32 Version 9.15.00
460	Univ. Radio Communication Tester	CMU 200	108901	R&S Test Firmware Base=5.14, GSM=5.14 WCDMA=5.14 (current Testsoftw.,f. all band to be used,
489	EMI Test Receiver	ESU40	1000-30	Firmware=4.43 SP3, Bios=V5.1-16-3, Spec. =01.00
491	ESD Simulator dito	ESD dito	dito307022	V 2.30
524	Voltage Drop Simulator	VDS 200	0196-16	Software Nr: 000037 Version V4.20a01
526	Burst Generator	EFT 200 A	0496-06	Software Nr. 000034 Version V2.32
527	Micro Pulse Generator	MPG 200 B	0496-05	Software-Nr. 000030 Version V2.43
528	Load Dump Simulator	LD 200B	0496-06	Software-Nr. 000031 Version V2.35a01
546	Univ. Radio Communication Tester	CMU 200	106436	R&S Test Firmware Base=5.14, GSM=5.14 WCDMA=5.14 (current Testsoftw.,f. all band to be used
547	Univ. Radio Communication Tester	CMU 200	835390/014	R&S Test Firmware Base=V5.1403 (current Testsoftw., f. all band used, GSM = 5.14 WCDMA: = 5.14
584	Spectrum Analyzer	FSU 8	100248	2.82_SP3
597	Univ. Radio Communication Tester	CMU 200	100347	R&S Test Firmware Base=5.01, GSM=5.02 WCDMA= not installed, Mainboard= µP1=V.850
598	Spectrum Analyzer	FSEM 30 (Reserve)	831259/013	Firmware Bios 3.40 , Analyzer 3.40 Sp 2
620	EMI Test Receiver	ESU 26	100362	4.43_SP3
642	Wideband Radio Communication Tester	CMW 500	126089	Setup V03.26, Test programm component V03.02.20
692	Bluetooth Tester	CBT 32	100236	CBT V 5.40, FW: V.2.41 (FPGA Digital, V. 3.09 FPGA RF)

7.1.2. Single instruments and test systems

Ref.-No.	Equipment	Type	Serial-No.	Manufacturer	Interval of calibration	Remark	Cal due
001	EMI Test Receiver	ESS	825132/017	Rohde & Schwarz	12 M	-	30.05.2017
005	AC - LISN (50 Ohm/50µH, test site 1)	ESH2-Z5	861741/005	Rohde & Schwarz	12 M	-	30.05.2017
007	Single-Line V-Network (50 Ohm/5µH)	ESH3-Z6	892563/002	Rohde & Schwarz	12 M	-	30.05.2017
009	Power Meter (EMS-radiated)	NRV	863056/017	Rohde & Schwarz	24 M	-	30.04.2017
016	Line Impedance Simulating Network	Op. 24-D	B6366	Spitzenberger+Spies	36 M	-	30.05.2019
020	Horn Antenna 18 GHz (Subst 1)	3115	9107-3699	EMCO	36/12 M	-	31.03.2017
021	Loop Antenna (H-Field)	6502	9206-2770	EMCO	36 M	-	30.04.2018
030	Loop Antenna (H-field)	HFH-Z2	879604/026	Rohde & Schwarz	36 M	-	30.04.2018
033	RF-current probe (100kHz-30MHz)	ESH2-Z1	879581/18	Rohde & Schwarz	24 M	-	30.04.2017
057	relay-switch-unit (EMS system)	RSU	494440/002	Rohde & Schwarz	pre-m	1a	
060	power amplifier (DC-2kHz)	PAS 5000	B6363	Spitzenberger+Spies	-	3	
066	notch filter (WCDMA; FDD1)	WRCT 1900/2200-5/40-10EEK	5	Wainwright GmbH	12 M	1g	30.06.2016
086	DC - power supply, 0 -10 A	LNG 50-10	-	Heinzinger Electronic	pre-m	2	
087	DC - power supply, 0 -5 A	EA-3013 S	-	Elektro Automatik	pre-m	2	
091	USB-LWL-Converter	OLS-1	007/2006	Ing. Büro Scheiba	-	4	
099	passive voltage probe	ESH2-Z3	299.7810.52	Rohde & Schwarz	36 M	-	30.04.2018
100	passive voltage probe	Probe TK 9416	without	Schwarzbeck	36 M	-	30.04.2018
110	USB-LWL-Converter	OLS-1	-	Ing. Büro Scheiba	-	4	
119	RT Harmonics Analyzer dig. Flickermeter	B10	G60547	BOCONSULT	36 M	-	30.05.2019
136	adjustable dipole antenna (Dipole 1)	3121C-DB4	9105-0697	EMCO	36 M	-	30.04.2018
140	Signal Generator	SMHU	831314/006	Rohde & Schwarz	24 M	-	30.05.2018
248	attenuator	SMA 6dB 2W	-	Radiall	pre-m	2	
249	attenuator	SMA 10dB 10W	-	Radiall	pre-m	2	
252	attenuator	N 6dB 12W	-	Radiall	pre-m	2	
256	attenuator	SMA 3dB 2W	-	Radiall	pre-m	2	
257	hybrid	4031C	04491	Narda	pre-m	2	
260	hybrid coupler	4032C	11342	Narda	pre-m	2	
261	Thermal Power Sensor	NRV-Z55	825083/0008	Rohde & Schwarz	24 M	-	30.05.2018
262	Power Meter	NRV-S	825770/0010	Rohde & Schwarz	24 M	-	30.05.2018
263	Signal Generator	SMP 04	826190/0007	Rohde & Schwarz	36 M	-	30.05.2019
265	peak power sensor	NRV-Z33, Model 04	840414/009	Rohde & Schwarz	24 M	-	30.05.2018
266	Peak Power Sensor	NRV-Z31, Model 04	843383/016	Rohde & Schwarz	24 M	-	30.05.2018
267	notch filter GSM 850	WRCA 800/960-6EEK	9	Wainwright GmbH	pre-m	2	
270	termination	1418 N	BB6935	Weinschel	pre-m	2	
271	termination	1418 N	BE6384	Weinschel	pre-m	2	
272	attenuator (20 dB) 50 W	Model 47	BF6239	Weinschel	pre-m	2	
273	attenuator (10 dB) 100 W	Model 48	BF9229	Weinschel	pre-m	2	
274	attenuator (10 dB) 50 W	Model 47 (10 dB) 50 W	BG0321	Weinschel	pre-m	2	
275	DC-Block	Model 7003 (N)	C5129	Weinschel	pre-m	2	
276	DC-Block	Model 7006 (SMA)	C7061	Weinschel	pre-m	2	
279	power divider	1515 (SMA)	LH855	Weinschel	pre-m	2	
287	pre-amplifier 25MHz - 4GHz	AMF-2D-100M4G-35-10P	379418	Miteq	12 M	1c	30.06.2017
291	high pass filter GSM 850/900	WHJ 2200-4EE	14	Wainwright GmbH	12 M	1c	30.06.2017
298	Univ. Radio Communication Tester	CMU 200	832221/091	Rohde & Schwarz	pre-m	3	
300	AC LISN (50 Ohm/50µH, 1-phase)	ESH3-Z5	892 239/020	Rohde & Schwarz	12 M	-	30.05.2017
301	attenuator (20 dB) 50W, 18GHz	47-20-33	AW0272	Lucas Weinschel	pre-m	2	
302	horn antenna 40 GHz (Meas 1)	BBHA9170	155	Schwarzbeck	36 M	-	31.03.2017
303	horn antenna 40 GHz (Subst 1)	BBHA9170	156	Schwarzbeck	36 M	-	31.03.2017
331	Climatic Test Chamber -40/+80 Grad	HC 4055	43146	Heraeus Vötsch	Pre-m	2	
341	Digital Multimeter	Fluke 112	81650455	Fluke	24 M	-	30.05.2018
342	Digital Multimeter	Voltcraft M-4660A	IB 255466	Voltcraft	24 M	-	30.04.2017
347	laboratory site	radio lab.	-	-	-	5	
348	laboratory site	EMI conducted	-	-	-	5	
354	DC - Power Supply 40A	NGPE 40/40	448	Rohde & Schwarz	pre-m	2	
355	Power Meter	URV 5	891310/027	Rohde & Schwarz	24 M	-	30.05.2018
357	power sensor	NRV-Z1	861761/002	Rohde & Schwarz	24 M	-	30.04.2017
371	Bluetooth Tester	CBT32	100153	R&S	36 M	-	30.05.2019
373	Single-Line V-Network (50 Ohm/5µH)	ESH3-Z6	100535	Rohde & Schwarz	12 M	-	30.05.2017
377	EMI Test Receiver	ESCS 30	100160	Rohde & Schwarz	12 M	-	30.05.2017
389	Digital Multimeter	Keithley 2000	0583926	Keithley	24 M	-	30.04.2017
392	Radio Communication Tester	MT8820A	6K00000788	Anritsu	12 M	-	30.05.2017
431	Model 7405	Near-Field Probe Set	9305-2457	EMCO	-	4	
436	Univ. Radio Communication Tester	CMU 200	103083	Rohde & Schwarz	12 M	-	30.04.2017
439	UltraLog-Antenna	HL 562	100248	Rohde & Schwarz	36 M	-	31.03.2017
443	CTC-FAR-EMI-RSE	System CTC-FAR-EMI-RSE	-	ETS-Lindgren / CETECOM	12 M	5	30.06.2017
448	notch filter WCDMA_FDD II	WRCT 1850.0/2170.0-5/40-	5	Wainwright Instruments GmbH	12 M	1c	30.06.2017
449	notch filter WCDMA FDD V	WRCT 824.0/894.0-5/40-8SSK	1	Wainwright	12 M	1c	30.06.2017
454	Oscilloscope	HM 205-3	9210 P 29661	Hameg	-	4	
456	DC-Power supply 0-5 A	EA 3013 S	207810	Elektro Automatik	pre-m	2	

Ref.-No.	Equipment	Type	Serial-No.	Manufacturer	Interval of calibration	Remark	Cal due
459	DC -Power supply 0-5 A , 0-32 V	EA-PS 2032-50	910722	Elektro Automatik	pre-m	2	
460	Univ. Radio Communication Tester	CMU 200	108901	Rohde & Schwarz	12 M	-	30.04.2017
463	Universal source	HP3245A	2831A03472	Agilent	-	4	
466	Digital Multimeter	Fluke 112	89210157	Fluke USA	24 M	-	30.05.2018
467	Digital Multimeter	Fluke 112	89680306	Fluke USA	36 M	-	30.04.2018
468	Digital Multimeter	Fluke 112	90090455	Fluke USA	36 M	-	30.04.2018
477	ReRadiating GPS-System	AS-47	-	Automotive Cons. Fink	-	3	
480	power meter (Fula)	NRVS	838392/031	Rohde & Schwarz	24 M	-	30.04.2017
482	filter matrix	Filter matrix SAR 1	-	CETECOM (Brl)	-	1d	
484	pre-amplifier 2,5 - 18 GHz	AMF-5D-02501800-25-10P	1244554	Miteq	12 M	-	30.06.2017
487	System CTC NSA-Verification SAR-EMI	System EMI field (SAR) NSA	-	ETS Lindgren / CETECOM	24 M	-	31.07.2017
489	EMI Test Receiver	ESU40	1000-30	Rohde & Schwarz	12 M	-	30.05.2017
502	band reject filter	WRCG 1709/1786-1699/1796-	SN 9	Wainwright	pre-m	2	
503	band reject filter	WRCG 824/849-814/859-	SN 5	Wainwright	pre-m	2	
512	notch filter GSM 850	WRCA 800/960-02/40-6EEK	SN 24	Wainwrght	12 M	1c	30.06.2017
517	relais switch matrix	HF Relais Box Keithley	SE 04	Keithley	pre-m	2	
523	Digital Multimeter	L4411A	MY46000154	Agilent	24 M	-	30.04.2017
529	6 dB Broadband resistive power divider	Model 1515	LH 855	Weinschel	pre-m	2	
530	10 dB Broadband resistive power divider	R 416110000	LOT 9828	-	pre-m	2	
546	Univ. Radio Communication Tester	CMU 200	106436	R&S	12 M	-	30.05.2017
547	Univ. Radio Communication Tester	CMU 200	835390/014	Rohde & Schwarz	12 M	-	30.04.2017
549	Log.Per-Antenna	HL025	1000060	Rohde & Schwarz	36/12 M	-	31.07.2018
550	System CTC S-VSWR Verification SAR-EMI	System EMI Field SAR S-VSWR	-	ETS Lindgren/CETECOM	24 M	-	31.07.2017
552	high pass filter 2,8-18GHz	WHKX 2.8/18G-10SS	4	Wainwright	12 M	1c	30.06.2017
557	System CTC-OTA-2	R&S TS8991	-	Rohde & Schwarz	12 M	5	30.09.2016
558	System CTC FAR S-VSWR	System CTC FAR S-VSWR	-	CTC	24 M	-	19.04.2017
574	Biconilog Hybrid Antenna	BTA-L	980026L	Frankonia	36/12 M	-	31.03.2019
584	Spectrum Analyzer	FSU 8	100248	Rohde & Schwarz	pre-m	-	
594	Wideband Radio Communication Tester	CMW 500	101757	Rohde & Schwarz	12 M	-	30.04.2017
597	Univ. Radio Communication Tester	CMU 200	100347	Rohde & Schwarz	pre-m	-	
598	Spectrum Analyzer	FSEM 30 (Reserve)	831259/013	Rohde & Schwarz	24 M	-	30.04.2017
600	power meter	NRVD (Reserve)	834501/018	Rohde & Schwarz	24 M	-	30.04.2017
601	medium-sensitivity diode sensor	NRV-Z5 (Reserve)	8435323/003	Rohde & Schwarz	24 M	-	30.04.2017
602	peak power sensor	NRV-Z32 (Reserve)	835080	Rohde & Schwarz	24 M	-	
611	DC power supply	E3632A	KR 75305854	Agilent	pre-m	2	
612	DC power supply	E3632A	MY 40001321	Agilent	pre-m	2	
613	Attenuator	R416120000 20dB 10W	Lot. 9828	Radiall	pre-m	2	
616	Digitalmultimeter	Fluke 177	88900339	Fluke	24 M	-	30.05.2018
617	Power Splitter/Combiner	ZFSC-2-2-S+	S F987001108	Mini Circuits	-	2	
618	Power Splitter/Combiner	50PD-634	600994	JFW Industries USA	-	2	
619	Power Splitter/Combiner	50PD-634	600995	JFW Industries, USA	-	3	
620	EMI Test Receiver	ESU 26	100362	Rohde-Schwarz	12 M	-	30.05.2017
621	Step Attenuator 0-139 dB	RSP	100017	Rohde & Schwarz	pre-m	2	
625	Generic Test Load USB	Generic Test Load USB	-	CETECOM	-	2	
627	data logger	OPUS 1	201.0999.9302.6.4.1.4 3	G. Lufft GmbH	24 M	-	30.04.2017
634	Spectrum Analyzer	FSM (HF-Unit)	826188/010	Rohde & Schwarz	pre-m	2	
637	High Speed HDMI with Ethernet 1m	HDMI cable with Ethernet 1m	-	KogiLink	-	2	
638	HDMI Kabel with Ethernet 1,5 m flach	HDMI cable with Ethernet	-	Reichelt	-	2	
640	HDMI cable 2m rund	HDMI cable 2m rund	-	Reichelt	-	2	
641	HDMI cable with Ethernet	Certified HDMI cable with	-	PureLink	-	2	
644	Amplifierer	ZX60-2534M+	SN865701299	Mini-Circuits	-	-	
670	Univ. Radio Communication Tester	CMU 200	106833	Rohde & Schwarz	24 M	-	30.05.2018
671	DC-power supply 0-5 A	EA-3013S	-	Elektro Automatik	pre-m	2	
678	Power Meter	NRP	101638	Rohde&Schwarz	pre-m	-	
683	Spectrum Analyzer	FSU 26	200571	Rohde & Schwarz	12 M	-	30.05.2017
686	Field Analyzer	EHP-200A	160WX30702	Narda Safety Test Solutions	24 M	-	30.04.2017
687	Signal Generator	SMF 100A	102073	Rohde&Schwarz	12 M	-	30.05.2017
688	Pre Amp	JS-18004000-40-8P	1750117	Miteq	pre-m	-	
690	Spectrum Analyzer	FSU	100302/026	Rohde&Schwarz	12 M	-	30.05.2017
692	Bluetooth Tester	CBT 32	100236	Rohde & Schwarz	36 M	-	31.03.2017
697	Power Splitter	ZN4PD-642W-S+	165001445	Mini-Circuits	-	2	

7.1.3. Legend

Note / remarks		Calibrated during system calibration:
	1a	System CTC-SAR-EMS (Ref.-No. 442)
	1b	System-CTC-EMS-Conducted (Ref.-No. 335)
	1c	System CTC-FAR-EMI-RSE (Ref.-No . 443)
	1d	System CTC-SAR-EMI (Ref.-No . 441)
	1e	System CTC-OATS (EMI radiated) (Ref.-No. 337)
	1 f	System CTC-CTIA-OTA (Ref.-No . 420)
	1 g	System CTC-FAR-EMS (Ref.-No . 444)
	2	Calibration or equipment check immediately before measurement
	3	Regulatory maintained equipment for functional check or support purpose
	4	Ancillary equipment without calibration e.g. mechanical equipment or monitoring equipment
	5	Test System

Interval of calibration	12 M	12 month
	24 M	24 month
	36 M	36 month
	24/12 M	Calibration every 24 months, between this every 12 months internal validation
	36/12 M	Calibration every 36 months, between this every 12 months internal validation
	Pre-m	Check before starting the measurement
	-	Without calibration

8. Versions of test reports (change history)

Version	Applied changes	Date of release
	Initial release	2016-12-23