EVO Lite Enterprise Series Aircraft

User Manual

V1.0.3 2024.03

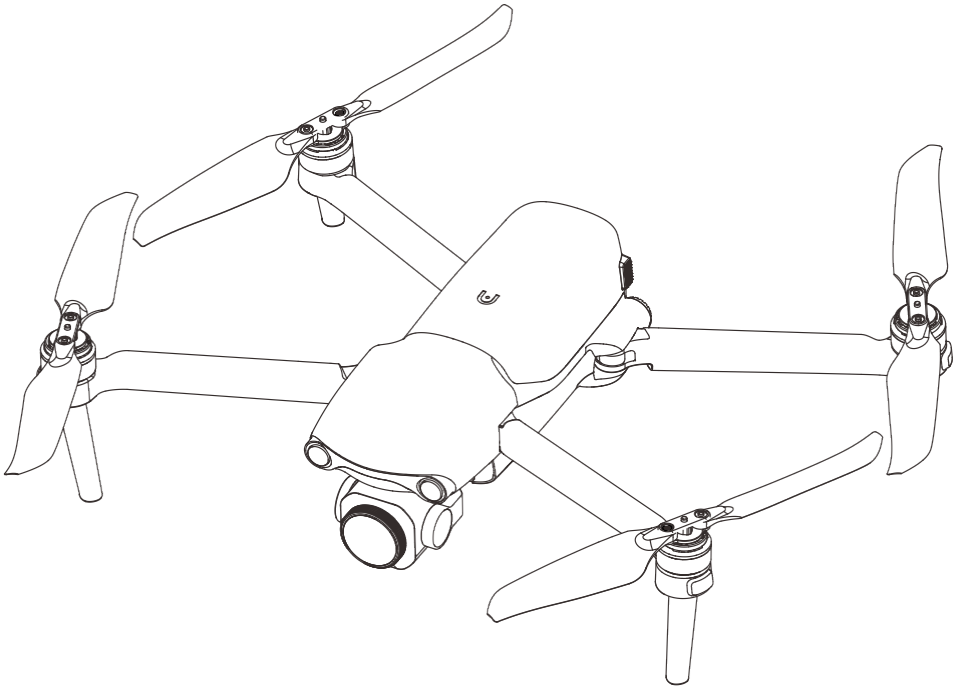

AUTEL
道通智能

Copyright

This manual is copyrighted by Autel Robotics Co., Ltd. with all rights reserved. Without prior written authorization from the company, no person (or entity) may copy, scan, store, distribute, reproduce, sell, transfer, or modify any part or all of this manual in any form for personal use or use by others. Users should only refer to this manual and the content thereof as instructions to operate this product. This manual should not be used for other purposes.

Trademark Information

EVO Lite™, Autel Sky™, Autel SkyLink™and AUTEL® trademarks are registered trademarks of the Autel Robotics Co., Ltd. (hereinafter referred to as "Autel Robotics") in China or other countries/regions.

Reading Assistance

- This manual is an electronic PDF document that supports high-resolution printing.
- If you are using a PDF reader such as Adobe Reader or Microsoft Edge to read this manual, press Ctrl+F on Windows or Command+F on Mac to search for keywords.
- View the content structure in the table of contents and click on titles to navigate to the respective pages.

Thank you for purchasing and using the EVO Lite Enterprise Series aircraft (hereinafter referred to as "aircraft") from Autel Robotics. Relevant user documents for this product are provided in electronic form along with the product, and download links are provided in this manual. Before using this product, please carefully read the operation steps and precautions in this manual, so that you can quickly understand the characteristics and usage methods of this product, so as to ensure safe use of the product.

- The final interpretation right of this document and all related documents of this product belongs to Autel Robotics.
- This document is subject to update without notice.

Legend

The following symbols are used in this manual to draw the user's attention to important safety and operating information. Please be sure to follow the notes or requirements under each symbol, otherwise, it may affect the safety features of the product or cause personal injury.

Symbol	Definition
	Warning: Alerts to a potentially hazardous situation.
	Important: Reminds the user to pay attention to a point.
	Remarks: Supplementary information.
	Tips: Quick tips to get the best possible experience.

Read Before Your First Flight

To ensure safe use of the EVO Lite Enterprise Series aircraft, Autel Robotics provides you with the following documents and relevant tutorial videos. Please scan the QR codes in this manual or use the provided links to access them.

1. “Packing List”: A list of everything that should be included in the packing box.
2. “Disclaimer and Safety Operation Guidelines”: Instructions on how to operate the product safely.
3. “Battery Safety Operation Guidelines”: Basic knowledge and safe handling of smart batteries.
4. “Quick Start Guide”: Basic knowledge of operating the product.
5. “User Manual”: A guide for you to master the operation method of the product proficiently.
6. “Maintenance Manual”: Instructions on how to maintain the aircraft and its accessories.

We recommend that you first check the completeness of the items in the packing box according to the “Packing List”, then read the “Disclaimer and Safety Operation Guidelines” carefully, and then watch the tutorial videos and read the "Quick Start Guide" to get a basic understanding of how to use the product.

Before your first flight, please read the "Battery Safety Operation Guidelines" and "User Manual" carefully to get a more detailed understanding of how to use the product.

Getting Tutorial videos, User Documents, and Relevant Software

You can scan the QR codes below or visit the following links to access tutorial videos and user documents or download relevant software for the EVO Lite Enterprise Series aircraft:

To watch tutorial videos, please visit:
https://www.autelrobotics.com/videos/evo-lite/.

To download resources, please visit:
https://manuals.autelrobotics.com/?dir=/EVO%20Lite%20Series/Aircraft/.

Manual Guide

This manual contains 7 main chapters and 3 appendices. You can refer to the corresponding chapters for the desired information.

Chapter	Chapter Overview
Product Overview	This chapter introduces the main functions of the EVO Lite Enterprise Series aircraft.
Flight Safety	This chapter introduces the flight environment, wireless communication requirements, and important flight safety features of the aircraft.
Aircraft	This chapter introduces the functions and usage of various components of the EVO Lite Enterprise Series aircraft.
Remote Controller	This chapter introduces the functions of the RC, including how to use the controller to operate the aircraft.
Smart Battery	This chapter introduces how to use, store, and maintain the smart battery of the aircraft.
Autel Enterprise Application	This chapter introduces the interfaces and functions of the Autel Enterprise Application.
Firmware Updates and Maintenance	This chapter introduces how to perform firmware updates and routine maintenance for the aircraft.

Appendix A	This chapter provides technical specifications for the EVO Lite Enterprise Series aircraft and its accessories.
Appendix B	EU Declaration of Conformity for EVO Lite Enterprise Series aircraft.
Appendix C	EU Drones Pilot Information Notices.

Disclaimer

To ensure the safe and successful operation of this product, please read and fully understand all user documents listed above and strictly follow the operating instructions and steps described in this manual. Store the aircraft and its accessories out of the reach of children and pets. If you do not abide by the Safety Operation Guidelines, Autel Robotics shall not be responsible for any product damage or personal and property loss during use, and shall not provide any warranty service. Never modify the product using any incompatible component or in any way that does not conform to the official instructions of Autel Robotics. Please make sure that the operations you perform do not endanger the personal or property safety of yourself or those around you. By starting to use this product, you agree that you have read and accepted all terms related to this product. You undertake to be responsible for your own actions and all consequences arising therefrom. You undertake to use this product only for legitimate purposes and agree to these terms and any relevant policies or guidelines that Autel Robotics may establish.

Important

- When unboxing the product for the first time, carefully check the aircraft and other accessories included in the packing box according to the “Packing List”.
- The content of this manual will be updated from time to time based on the function updates of the product.
- Please be aware that in the absence of flight logs from the Autel Enterprise, Autel Robotics may not be able to analyze the causes of product damage or accidents and provide after-sales service.

Warning

- Using the EVO Lite Enterprise Series aircraft of Autel Robotics involves certain safety risks. Do not allow minors to operate the aircraft.
- Users under the age of 16 must use this aircraft under the supervision of a professional adult.

Warranty Policy

Autel Robotics guarantees users who purchase products through its official authorized channels that:

Under normal use, the Autel Robotics products you purchase will be free from material and workmanship defects during the warranty period.

If you can provide a valid purchase receipt, the warranty period of this product is calculated from the midnight of the next day after you receive the product.

If you cannot provide a valid purchase receipt, the warranty start date will be postponed by 90 days from the date of manufacture indicated by the product's serial number or as defined by Autel Robotics.

Tips

- For the after-sales policy of the product, please visit: https://www.autelrobotics.com/service/policy/.

After-Sales Support

If you have any questions or concerns about our products, please contact Autel Robotics customer support:

Hotline: (844) MY AUTEL or (844) 692-88 35

Maintenance Service

If your equipment needs to be inspected or repaired, please contact Autel Robotics through the following methods:

Email after-sale@autelrobotics.com or support@autelrobotics.com.

Call Autel Robotics customer support at (844) MY AUTEL or (844) 692-88 35.

Contact dealers authorized by Autel Robotics.

Important

- All data stored on the product may be erased during the repair process. To avoid data loss, please back up important files in your aircraft before the product is under warranty.

Company Information

Manufacturer:

Autel Robotics Co., Ltd.

Address:

601,701,801,901, Block B1, Nanshan iPark, No. 1001 Xueyuan Avenue, Nanshan District, Shenzhen, Guangdong, 518055, China

Official Website:

www.autelrobotics.com.

Table of Contents

Chapter 1 Product Overview 1

1.1 Introduction 1

1.2 What's In The Rugged Case 2

1.3 Product Acceptance Checklist 2

1.4 UAS Introduction 3

Chapter 2 Flight Safety 6

2.1 Legal Use Notice 6

2.1.1 China’s Mainland 6

2.1.2 The U.S. 7

2.1.3 The EU 7

2.1.4 Other Countries and Regions 7

2.2 Flight Operation Regulations 8

2.3 Flight Environment Requirements 8

2.4 Wireless Communication Requirements 9

2.5 Declaration of Maximum Take-off Mass 9

2.6 Obstacle Avoidance System 10

2.6.1 Introduction to the visual perception system 10

2.6.2 Visual positioning function 11

2.6.3 Visual obstacle avoidance function 11

2.6.4 Precautions for obstacle avoidance system usage 12

2.7 Auto Return Home 12

2.7.1 Manual activation of auto return home 13

2.7.2 Low battery activation of auto return home 13

2.7.3 Behavior activation of auto return home 14

2.7.4 Auto return home mechanism 14

2.7.5 Auto return home obstacle avoidance process 15

2.7.6 Landing protection function 16

2.8 Rebuilding of the C2 Link 16

2.9 Flight Restrictions and Unlocking 17

2.9.1 Geofence system 17

2.9.2 Restricted zones 18

2.9.3 Import UGZ 20

2.9.4 Unlocking no-fly zones 20

2.10 Altitude and Distance Limits 21

2.11 Aircraft Calibration 22

2.11.1 Compass calibration 22

2.11.2 IMU calibration 23

2.11.3 Gimbal auto calibration 25

2.12 Emergency Stop Propellers During Flight 25
2.13 Direct Remote Identification 26
2.14 Standard Flight Operation Process 27
2.14.1 Pre-flight inspection checklist 27
2.14.2 Basic flight procedure 27
2.15 List of Safeguard 28
Chapter 3 Aircraft 29
3.1 Aircraft Registration and Activation 29
3.2 Aircraft Components 29
3.3 Propeller 32
3.3.1 Replacing propellers 32
3.3.2 Storing propellers 34
3.4 Arm Light 34
3.5 Auxiliary Bottom Light 36
3.6 Camera 36
3.6.1 Camera differences 37
3.6.2 Camera operations 38
3.7 Gimbal 38
3.7.1 Gimbal mechanical rotation range 39
3.7.2 Gimbal operations 40
3.8 Flight Control System 40
3.8.1 Flight status 41
3.8.2 Flight modes 42
3.8.3 Intelligent flight function 43
3.9 Installing the microSD Card 43
3.10 Noise 44
3.11 Autel SkyLink Image Transmission Function 45
Chapter 4 Remote Controller 49
4.1 Introduction 49
4.1.1 Remote Controller Components 49
4.1.2 Communication Frequency Bands 52
4.2 Installing the Remote Controller Lanyard 54
4.3 Installing/Storing Command Sticks 55
4.4 Turning the Remote Controller On/Off 55
4.5 Checking the Battery Level of the Remote Controller 57
4.6 Charging the Remote Controller 58
4.7 Adjusting the Antenna Position of the Remote Controller 58
4.8 Remote Controller System Interfaces 59
4.8.1 Remote Controller Main Interface 59

4.8.2 Shortcut Menu 62
4.9 Frequency Pairing With the Remote Controller 63
4.9.1 Using the Autel Enterprise App 63
4.9.2 Using Combination Buttons (For Forced Frequency Pairing) 64
4.10 Selecting Stick Mode 64
4.10.1 Stick Modes 64
4.10.2 Setting Stick Mode 66
4.10.3 Starting/Stopping the Aircraft Motor 68
4.11 Remote Controller Buttons 68
4.11.1 Custom Button C 68
4.11.2 Take-off/Return-to-Home Button and Pause Button 69
4.12 Turning On/Off the Remote Controller Prompt Sound 70
4.13 Calibrating the Remote Controller Compass 71
4.14 Calibrating the Remoter Controller 71

Chapter 5 Smart Battery 73

5.1 Battery Introduction 73
5.2 Smart Battery Functions 74
5.3 Smart Battery Usage 75
5.3.1 Installing/Removing the smart battery 76
5.3.2 Turning on/off the smart battery 77
5.3.3 Checking the battery level 77
5.3.4 Charging the smart battery 78
5.4 Storing and Transporting the Smart Battery 80
5.5 Maintaining and Handling the Smart Battery 81
5.5.1 Maintaining the smart battery 81
5.5.2 Standard charging and discharging process 81
5.5.3 Smart battery replacement standards 81
5.5.4 Recycling the smart battery 82

Chapter 6 Autel Enterprise Application 83

6.1 Software Introduction 83
6.2 Main Interface 83
6.3 Status Notification Bar 85
6.4 Shortcut Toolbar 86
6.5 “Settings” Interface 89
6.5.1 Flight Control Parameter Setting 89
6.5.2 OA Settings 91
6.5.3 RC Settings 93
6.5.4 Image Transmission Settings 94
6.5.5 Aircraft Battery 95

6.5.6 Gimbal Settings 96
6.5.7 More 97
6.6 Attitude Ball 100
6.7 "Map" Interface 102
6.8 Camera Interfaces 104
6.8.1 Camera Function Area 104
6.8.2 “Thermal Camera” Interface 107
6.8.3 “Wide Angle Camera” Interface 109
6.9 Flight Missions 110
6.9.1 Waypoint 110
6.9.2 Rectangle Mission 116
6.9.3 Polygon 121
6.9.4 Pre-flight Check 123
6.9.5 Resume Mission 125
6.9.6 Mission and Favorites 126
6.9.7 Personal Center 127
Chapter 7 Firmware Updates and Maintenance 128
7.1 Aircraft and Remote Controller Firmware Updates 128
7.2 Aircraft Parts Maintenance 129
7.3 Troubleshooting Guide 130
Appendix A Product Specifications 133
A.1 Aircraft 133
A.2 Gimbal Camera 136
A.2.1 EVO Lite 6K Enterprise Aircraft Gimbal Camera 136
A.2.2 EVO Lite 640T Enterprise Gimbal Camera 137
A.3 Remote Controller 139
A.4 Smart battery 141
Appendix B Declaration of Conformity 143
Appendix C Drone Pilot Information Notices 144

Chapter 1 Product Overview

1.1 Introduction

The EVO Lite Enterprise Series aircraft (hereafter referred to as the aircraft) is a lightweight aircraft, integrated with a Visual Perception System of 6 visual sensors for three directional obstacle avoidance capability. With an excellent power management system, the aircraft can reach a flight time of up to 40 minutes. Also, it utilizes a three-axis stabilized gimbal, allowing you to view observed videos and data in real time through the Autel Enterprise Application.
The EVO Lite Enterprise Series aircraft adopts a foldable design and can hold its propellers for easy storage and transportation.
The EVO Lite Enterprise Series aircraft is equipped with auxiliary light and ultrasonic sensor at the bottom to improve visual positioning performance in weak light conditions, thus enhancing flight safety during landing.
The Autel Smart Controller SE V2 (hereafter referred to as the remote controller) adopts the Autel SkyLink Image Transmission solution, has strong anti-interference capabilities, and can achieve stable transmission of HD videos to the display screen of the RC. The RC is equipped with multiple function buttons, enabling quick aircraft control and camera operation.
The remote controller features a 6.0-inch 1440×720 high-brightness touchscreen with a maximum brightness of 800 nits. It adopts a customized Android system that supports the installation of third-party apps and offers functions such as satellite-based positioning, Wi-Fi, and Bluetooth. Moreover, it supports the PD60 fast charging protocol, allowing it to operate up to 3.0 hours on a full charge.

Tips

- The Visual Perception System has limitations in usage environments and regions. Please read the "Disclaimer and Safety Operation Guidelines" to learn about relevant safety precautions.
- The flight time of the aircraft is measured in a laboratory environment (The aircraft flies at a constant speed of 10 meters per second in a light breeze environment) and is for reference only. The actual flight time may vary depending on factors such as environmental conditions and flight mode.
- Please note that the EVO Lite Enterprise Series aircraft includes two models: the EVO Lite 6K Enterprise aircraft and the EVO Lite 640T Enterprise aircraft. They only differ in gimbal cameras. The EVO Lite Enterprise aircraft is equipped with a 6K optical gimbal camera, and the EVO Lite 640T Enterprise aircraft is equipped with an infrared thermal imaging dual-camera gimbal system.

Warning

- If multiple aircraft are flying in an area at the same time, please keep an appropriate air distance to avoid any accidents.

1.2 What's In The Rugged Case

EVO Lite Enterprise Series is packed and stored in paper case (with EPE pearl cotton for buffering). The detail within the case is as follows:

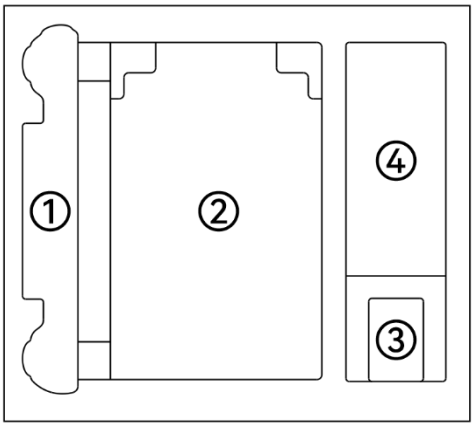

Fig 1-1 Inside the case

Table 1-1 Inside-the-Case description

No.	Item	No	Item
1	Autel Smart Controller SE V2	2	Aircraft
3	Battery Charger	4	Battery Charger AC cable USB-A to USB-C cable User manual

Important

- Upon receiving the product, please inspect and confirm that its outer packaging is intact, with no signs of unpacking. Meanwhile, save the unboxing video for potential logistics damage claims.
- After daily usage of the aircraft, please put the aircraft into the case, and store it in the dry environment. When moving the case, please be careful.

1.3 Product Acceptance Checklist

After unboxing the product, please check whether the actual items match the items described in the following packing list and carefully inspect the appearance of the aircraft and all accessories. If anything missing or damage is found, please contact Autel Robotics After-Sales Support or authorized dealers promptly.

Important

- Upon receiving the product, please inspect and confirm that its outer packaging is intact, with no signs of unpacking. Meanwhile, save the unboxing video for potential logistics damage claims.

Table 1-2 Packing List

No.	Item	Model/Specification	Quantity	Note
1	EVO Lite Enterprise Series Aircraft	MDXM	1	Includes 1 battery, 1 32GB microSD card, propellers, gimbal camera, and gimbal protective cover.
2	Autel Smart Controller SE V2	EF6-2	1	Includes 2 sticks and 2 antennas.
3	Battery Charger	AQ661-12755000D	1	Includes AC cable.
4	USB-A to USB-C Cable		1	Used with a power adapter to charge the RC.
5	User Manual		1	
6	Product Certification		1	

1.4 UAS Introduction

Before first flight, please perform a comprehensive inspection of the UAS to ensure that all components meet the following requirements. A complete UAS consists of two parts: the aircraft and the RC. The relevant requirements and explanations are as follows:

■ Aircraft Components And Payload

Please be noted that a complete aircraft includes the aircraft body, gimbal camera, propellers, and the battery. Any damage or missing of these components may result in a malfunction.

Table 1-3 EVO Lite Enterprise Series Aircraft Component List

Item	Product Info	Manufacturer	Note
EVO Lite 6K Enterprise aircraft	Max. weight: 866 g Max. Dimension: 433×516×95mm EAN: 6924991132790 UPC: 889520212793	Autel Robotics	Includes propellers, battery, and a gimbal.
EVO Lite 640T Enterprise aircraft	Max. weight: 866 g Max. Dimension: 433×516×95mm EAN: 6924991132783 UPC: 889520212786	Autel Robotics	Includes propellers, battery, and a gimbal.

Smart Battery MDXM_6175_1113	Max. weight: 309 g EAN: 6924991132158 UPC: 889520212151	Autel Robotics	Included
CW/CCW Propeller	Max. weight: 7.5 g Max. Dimension: 8.5 inches EAN: 6924991102533 UPC: 889520012270	Autel Robotics	Included

Tips

- All the above components have passed Autel Robotics safety and compatibility tests, users can purchase and use accordingly.
- In case of adding any payload before flight, please evaluate the mounting weight reasonably. More details, please refer to "2.5 Declaration of Maximum Take-off Mass" in Chapter 2.

■ Remote Controller Components & The App

A complete RC includes the controller body (equipped with functional buttons), joysticks, and an antenna. Any damage or missing of these components may result in a malfunction. The Autel Enterprise, serving as the flight application software that controls the aircraft, should be maintained to ensure comprehensive control over the UAS.

Table 1-4 RC Components List

Item	Product Info	Operating System	Manufacturer	Note
RC	Max. weight: 607 g EAN: 6924991131137 UPC: 889520211130	Android 6.0.1	Autel Robotics	Includes 2 command sticks and an antenna.

Table 1-5 Firmware and Software version explanation

No.	Item	Release Version	Note	Release Date
1	Image Transmission	V1.0.1.29	/	2024 Q1
2	Sticks	V10.0.0.7	/	2024 Q1
3	OS	RC6_V1.0.1.29	Based on Android 6.0.1	2024 Q1
4	Autel Enterprise	1.4.76	Flight Control Software	2024 Q1

Tips

- The above information is for reference only. Both the RC and the aircraft have been upgraded to the latest versions before shipment. Users can use accordingly.
- When the RC and the aircraft are frequency-paired and the RC is connected to the internet, Autel Enterprise will automatically check for firmware updates. More instructions, please refer to "7.1 Aircraft and Remote Controller Firmware Updates" in Chapter 7.
- When there's any prompt for updates, please follow the instructions to update accordingly to address any issues and to enjoy the new features. Users also have the option to temporarily pause updates; however, this won't affect the existing functions.

Table 1-6 List of Pre-installed Apps on the Remote Controller

No.	Pre-installed App	Software Version	Note
1	Autel Enterprise	V1.4.76	Flight Control Software
2	My File	0.1.5	System Software
3	Gallery	1.1.40030	System Software
4	Browser	6.0.1	System Software
5	Settings	6.0.1	System Software
6	Google Pinyin Input	4.5.2.193126728-arm64-v8a	System Software
7	Android Keyboard (AOSP)	6.0.1	System Software
8	Launcher3	6.0.1	System Software
9	MX Player	1.80.0	System Software
10	Camera	201408221045	System Software

Tips

- The pre-installed Apps mentioned are the basic application for the remote controller. Users also have the option to install third-party software if desired.

Chapter 2 Flight Safety

After the first unboxing, please scan the QR code in the Quick Start Guide to obtain the latest version of the manual. Please read and understand the entire manual carefully to ensure the safe and correct use of the aircraft.
Before engaging in actual outdoor flights, it is essential to undergo relevant basic flight training (such as watching instructional videos, receiving guidance from professionals, etc.) to familiarize oneself with the functions and characteristics of the aircraft and RC.
Prior to flight, please familiarize yourself with all local laws and regulations concerning civilian unmanned aerial vehicles. Choose an appropriate flight environment, set a reasonable flight altitude, and conduct legal flights in accordance with relevant flight requirements and restrictions. Using the aircraft in unsuitable flight environments may pose legal risks.
Before flight, be sure to read the "Disclaimer and Safety Operation Guidelines" to understand relevant safety precautions.

2.1 Legal Use Notice

Upon the initial unboxing, please adhere to the legal requirements of the country or region where you are currently located and complete the real-name registration of the aircraft.

2.1.1 China's Mainland

- According to the requirements of the Civil Aviation Administration of China's "Management Regulations for the Real-Name Registration of Civil Unmanned Aerial Vehicles," owners of civilian drones must register their real names on the "Comprehensive Management Platform for Civil Unmanned Aerial Vehicles" (https://uom.caac.gov.cn) after purchase and affix the QR code registration mark on the aircraft. Failure to register with real names and affix the registration mark may result in penalties imposed by regulatory authorities.
- The EVO Lite Enterprise Series aircraft is a light unmanned aircraft, and the operation of this product by individuals under the age of 16 is prohibited by Autel Robotics. Users under the age of 16 must use this aircraft under the supervision of a professional adult.
- It is recommended to read the "Interim Regulations on the Management of Unmanned Aerial Vehicle Flights" for more detailed regulatory requirements before conducting flights.

Important

- According to the "Civil Unmanned Aerial Vehicle System Safety Requirements" in China's Mainland, after users register, they should enter their real-name registration number in the Autel Enterprise and activate the DRI system (Direct Remote Identification) and the Civil Aviation Administration's flight dynamic data reporting function. For more details, please refer to "2.13 Direct Remote Identification" in this chapter and "6.5.7 More" in Chapter 6.

2.1.2 The U.S.

- Before using a drone, please complete the real-name registration on the FAA website (https://faadronezone-access.faa.gov/#/) (registrants must be 13 years old or above). Failure to do so may result in regulatory and criminal penalties.
- The Federal Aviation Administration (FAA) in the United States may impose civil fines of up to $27,500. Criminal penalties may include fines of up to $250,000 and/or a maximum of three years in prison.

2.1.3 The EU

- Drone operators/owners must register with the National Aviation Authority (NAA) in the EU country where they reside (https://www.easa.europa.eu/drones/NAA).
- This product is not a toy, and individuals under the age of 16 are prohibited from operating it.
- In the EU region, The EVO Lite Enterprise Series aircraft bears a C1 class identification label, and thus you must comply with subcategory A1 operational restrictions while using it, which are as follows:
  1. No flight expected over uninvolved people (if it happens, overflight should be minimized).
  2. No flight over assemblies of people.
  3. Maintain flight altitude below 120m above ground level.
- The EVO Lite Enterprise Series aircraft can also fly in subcategory A3.
- Remote pilot should obtain a 'Proof of completion for online training' for A1/A3 'open' subcategory by:
  1. Completing the online training.
  2. Passing the online theoretical exam.
- Before using this product, click the following link to learn the detailed information on safety operation limitations about EASA Class 1 drones: (https://www.easa.europa.eu/document-library/general-publications/drones-information-notices)

Important

- According to EU regulations, the EVO Lite Enterprise Series aircraft is equipped with sensors (gimbal camera) capable of detecting personal data. Users are required to undergo legal registration when using the product.
- After registration, users should input the operator registration number in the Autel Enterprise and activate the DRI system. For more details, please refer to "2.13 Direct Remote Identification" in this chapter.

2.1.4 Other Countries and Regions

Before flying, please consult local legal professionals or aviation authorities to obtain information on laws, regulations, and policies regarding civilian unmanned aerial vehicles. Follow the relevant guidelines to undergo legal registration.

2.2 Flight Operation Regulations

Before flying, it is crucial to understand and adhere to the following flight operation regulations. Violating these regulations may lead to severe consequences or even legal consequences.

- Operating the aircraft while under the influence of alcohol, drugs, medication-induced impairment, dizziness, fatigue, nausea, or any other compromised physical or mental condition is strictly prohibited.
- Avoid flying near manned aircraft and ensure that the aircraft's flight does not impact larger manned aircraft on their flight paths. Remain vigilant, steer clear of other aircraft, and land immediately if necessary.
- Do not fly in areas prohibited by local regulations without obtaining authorized permits. Prohibited areas may include airports, borderlines, major cities and densely populated areas, large event venues, emergency situations (such as forest fires), and sensitive building facilities zones (such as nuclear power plants, power stations, hydroelectric plants, prisons, traffic arteries, government buildings, and other related facilities).
- Prohibit the use of the aircraft at large event venues, including but not limited to sports stadiums and concerts.
- Avoid flying in airspace exceeding the regulated altitude.
- Do not use the aircraft to carry any illegal hazardous materials.
- Ensure a clear understanding of the type of flight activity (e.g., recreational, official, or business). Obtain permits from relevant authorities before flying. If necessary, consult with local legal professionals for detailed definitions and explanations of flight activity types.
- When using the aircraft for filming, respect the privacy of others. It is strictly forbidden to use this product for any unauthorized surveillance activities, including but not limited to monitoring of individuals, groups, events, performances, exhibitions, or buildings.
- Please note that recording or photographing others, groups, events, performances, exhibitions, etc., without legal authorization may violate copyright, privacy rights, or other lawful rights of others. Therefore, it is essential to thoroughly understand and comply with local laws and regulations before use.

2.3 Flight Environment Requirements

- Avoid flying in adverse weather conditions such as strong winds, snow, rain, heavy fog, sandstorms, extreme cold, or high temperatures. The maximum allowable wind speed is fresh breeze.
- Ensure the aircraft takes off from and lands on open, unobstructed, and flat ground. Keep a safe distance from crowds, surrounding buildings, trees, etc., and control the aircraft within visible range to ensure flight safety.
- Fly at altitudes below 2000m.
- Due to poor lighting conditions, GNSS signal loss, narrow spaces, etc., some functions of the aircraft may be restricted. Always be aware of the surrounding environment and maintain safe control of the aircraft.
- For night flights, please be sure to choose open and uninhabited areas and ensure the Aux Light is on during landing for safety.
- Avoid taking off or landing on moving platforms such as moving vehicles, boats, etc.
- Avoid taking off or landing on sandy surfaces to prevent raised dust affecting the lifespan of the motors.

- The performance of the smart battery is influenced by environmental temperature and air density. Use the aircraft in environments ranging from 0°C to +40°C.
- When using the aircraft in disaster-stricken areas after events such as fires, explosions, lightning, storms, tornadoes, heavy rain, floods, earthquakes, sandstorms, etc., pay special attention to the safety of takeoff and landing points and changes in the surrounding environment. Prioritize personal safety.
- Stay away from steel structures, iron mines, etc., to avoid interference with the aircraft's compass.

2.4 Wireless Communication Requirements

- Stay away from areas with strong electromagnetic interference, such as radar stations, microwave stations, mobile communication base stations, drone interference devices, etc., and maintain a distance of at least 200 meters.
- When flying near sources of electromagnetic interference, exercise caution and continuously observe and assess the stability of image transmission signals and videos of the RC. Common sources of electromagnetic interference include, but are not limited to, high-voltage transmission lines, high-voltage substations, mobile communication base stations, and TV broadcast signal towers. If significant interference occurs in these places during flight operations, the aircraft may not be able to fly normally, so return and landing should be done promptly.
- Choose open and spacious areas or high grounds for flying. Tall mountains, rocks, urban structures, and forests may obstruct the GNSS signal and the aircraft's video transmission signal.
- It is recommended to turn off unnecessary Wi-Fi and Bluetooth devices in the vicinity to avoid interference with the RC signal.

2.5 Declaration of Maximum Take-off Mass

During flight operations, the actual takeoff weight of the aircraft should not exceed the Maximum Takeoff Weight (MTOW) declared for the aircraft. Exceeding this limit may result in aircraft safety incidents. For detailed data, please refer to Appendix A "A.1 Aircraft".
The actual takeoff weight of the aircraft is composed of the aircraft weight and the payload weight. Before mounting the payload, ensure that the payload weight is within a reasonable range.

Remarks

- The aircraft weight consists of the airframe weight, gimbal camera weight, propeller weight, and smart battery weight. Different models of gimbal cameras may have differences in weight. If the aircraft is equipped with a different model of gimbal camera, reweigh the aircraft to determine the updated weight data.
- The payload weight should adhere to the following rule: Payload Maximum Weight ≤ Maximum Takeoff Weight - Aircraft Weight.

2.6 Obstacle Avoidance System

2.6.1 Introduction to the visual perception system

The aircraft adopts a visual perception system design to achieve avoidance performance of front, rear, and bottom, ensuring precise positioning and safe flight of the aircraft.
The visual perception system is a vision-based positioning system that perceives obstacles and obtains aircraft position information through visual image ranging. The aircraft's visual perception system is located at the front, rear, and bottom of the fuselage, utilize the "dual pinhole lens" structure, the combination of which enables omnidirectional visual obstacle avoidance.

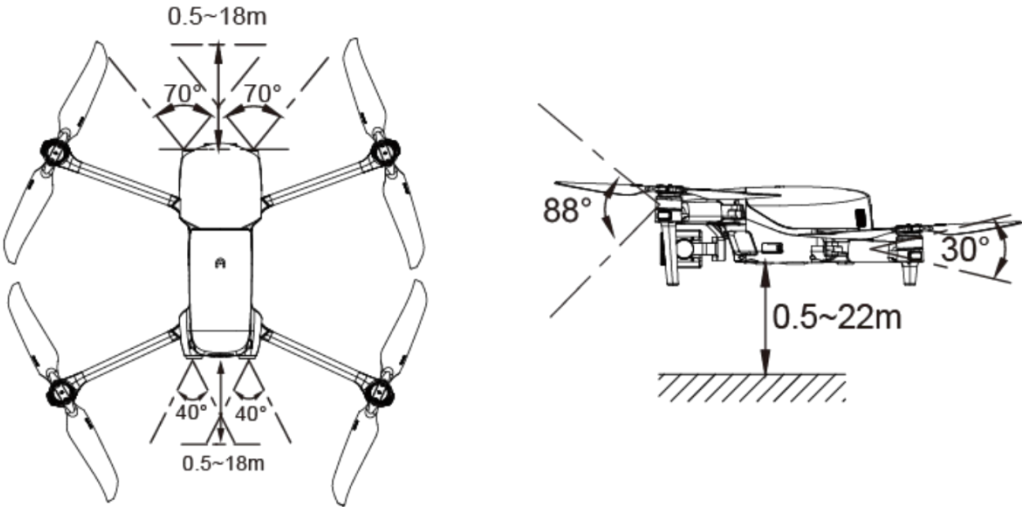

Fig 2-1 Aircraft Visual Perception Range

⚠ Warning

- When using the aircraft for flight, avoid obstructing the lenses of the visual perception system. Doing so may impact the performance of the aircraft's visual obstacle avoidance and could lead to flight accidents.
- There are some blind spots in the diagonal area of the visual obstacle avoidance system. Obstacles in the left, right, and upper directions of the aircraft will not be recognized. When flying manually, please always pay attention to the surrounding environment and app prompts to ensure safety.

Important

- The visual perception systems in the front, rear, and bottom of the aircraft can also use ultrasonic sensors to calculate the aircraft's height and obtain position information through image analysis.
- The performance of visual obstacle avoidance is influenced by environmental light and surface texture of objects. The visual obstacle avoidance system is not 100% reliable. When flying with the visual obstacle avoidance system activated, always pay attention to the live video feed on the Autel Enterprise.

2.6.2 Visual positioning function

The aircraft supports visual positioning function in the absence of GNSS signals, providing flight positioning capabilities when GNSS signals are poor or lost, ensuring the safe flight of the aircraft. In the presence of GNSS positioning information, the visual localization function provides auxiliary positioning information to enhance the accuracy of the aircraft's positioning.
In situations where there is neither GNSS signal nor adequate conditions for the visual perception system, leading to the simultaneous failure of both GNSS signal and visual localization, the aircraft will initiate ATTI mode automatically.

⚠ Warning

- If you lack extensive flight experience, try to avoid flying beyond visual range.
- When relying on visual localization for flight, avoid flying near surfaces such as water or snowy areas with mirror-like reflections. In poor GNSS signal conditions, ensure the aircraft is flying in well-lit environments with clear object surface textures.

Tips

When the aircraft is already in flight and the GNSS signal disappears or weakens, the RC will provide the following warning prompts：

- If the takeoff point is inaccurate: The Autel Enterprise will display a floating window with the alert "GNSS signal is weak. The landing point may deviate." and the RC will simultaneously emit a voice prompt.
- If the GNSS signal is weak: The Autel Enterprise will display a floating window with the alert "GNSS signal is weak. Move the aircraft to an open area." and the RC will simultaneously emit a voice prompt.
- If the aircraft is in ATTI mode: The Autel Enterprise will display a floating window with the alert "No GNSS and visual positioning, please fly with caution." and the RC will simultaneously emit a voice prompt.

2.6.3 Visual obstacle avoidance function

The visual obstacle avoidance function is suitable for well-lit conditions, and the obstacles encountered in the flight path should not be too sparse (such as sparse iron wire mesh, small branches along the outer edges of trees, etc.). Additionally, due to inertia, it is necessary to control the aircraft to brake within an effective distance. The flight control system will limit the attitude angle of the aircraft during acceleration to not exceed 30°, and the maximum flight speed is less than 12 m/s.

⚠ Warning

- The obstacle avoidance function may become invalid when the aircraft is in the Ludicrous mode.

2.6.4 Precautions for obstacle avoidance system usage

The measurement accuracy of the visual perception system is easily affected by factors such as light intensity and object surface texture. Exercise caution when using the system in the following scenarios:

- Solid-color surfaces (such as pure white, pure black, pure red, pure green) and low-texture scenes.
- Surfaces with strong reflections or reflections.
- Surfaces of moving objects (such as crowds of people, swaying reeds in the wind, bushes, grass, etc.).
- Water surfaces or surfaces of transparent objects.
- Scenes with rapid and intense changes in lighting or scenes directly illuminated by strong light sources.
- Extremely dark surfaces (light intensity less than 15 lux) or extremely bright surfaces.
- Small obstacles (such as wires, power lines, branches, etc.).
- Dirty lenses (such as water droplets, fingerprints, etc.).
- Scenes with low visibility (such as heavy fog, heavy snow, etc.).
- Low-altitude flights below 2 meters with excessive flight speed.

Remarks

- Please be aware that the visual perception system of the aircraft is highly likely to fail in low-light conditions, such as nighttime, resulting in the loss of visual obstacle avoidance capability.
- To avoid interference with the ultrasonic positioning system, do not use ultrasonic devices operating at 40kHz, such as ultrasonic rangefinders, fault detectors, cleaners, or welders.

2.7 Auto Return Home

The aircraft is equipped with an automatic return home function. If the GNSS signal is good, when the auto return home conditions are triggered, the aircraft will automatically return to the home point and land to prevent accidents.
The aircraft provides users with three ways to activate the auto return home: manual activation, low battery activation, and behavior activation.

Remarks

- Home Point: The landing point when the aircraft executes an automatic return home. In the Autel Enterprise, you can set the home point of the aircraft as “Me” and "Aircraft". For more details, please refer to “6.5.1 Flight Control Parameter Setting ” in Chapter 6.
- If the return home point is not set in the Autel Enterprise, the aircraft will default to the takeoff point as the return home point.
- During the auto return home process, the control functions of the RC for the aircraft will be disabled. At this time, you can pause or exit the auto return home by pressing or long-pressing the pause button "⏸" on the RC for 2 seconds to regain control of the aircraft.

For more details, please refer to “4.11.2 Takeoff/Return-to-Home button and pause button" in Chapter 4.

⚠ Warning

- If the GNSS signal is poor, the auto return home function cannot be activated.
- If the obstacle avoidance system is not enabled during auto return home, the aircraft will not be able to automatically avoid obstacles.
- If the landing point for auto return home is not suitable for the aircraft to land (such as uneven ground or presence of a crowd), please exit the auto return home first and then manually control the aircraft to land.

2.7.1 Manual activation of auto return home

During flight, users can manually activate the auto return home by long-pressing the return-to-home button "" on the RC for 2 seconds.

2.7.2 Low battery activation of auto return home

During flight, to prevent unnecessary risks due to insufficient battery power, the aircraft will intelligently assess whether the current battery level is sufficient based on the aircraft's current position.
If the current battery level is only sufficient for the return home process, the Autel Enterprise will display a pop-up alert saying "The remaining battery is only enough for return to Home. The aircraft will Return to Home after 10s." to remind the user whether to execute the low battery auto return home. If the user chooses to execute or does not perform any operation within 10s, the aircraft will enter low battery auto return home after 10s. The user can press and hold the pause button "" on the RC for 2s to exit the auto-return home and regain control of the aircraft. If the user regains control of the aircraft and continues low battery flight, when the battery level is only enough for landing, the Autel Enterprise will display an alert “The aircraft will start landing in 10 seconds. Please fly with caution while landing.” At this time, the aircraft will activate critically low battery level landing, which cannot be cancelled in the process, but users can control the horizonal direction of the aircraft,

Tips

- The low battery auto return home and critically low battery landing have no direct relation with the low battery warning and the critically low battery warning in the Autel Enterprise.

⚠ Warning

- When the aircraft triggers low battery auto return home, the auto return home process should not be canceled. Otherwise, the aircraft may not have enough power to return to the home point.
- It is not recommended to let the aircraft enter the severe low battery landing process. To avoid the landing area being unsuitable for the aircraft to land and causing damage to the aircraft.
- When the Autel Enterprise displays relevant warning prompts, follow the corresponding instructions immediately.

2.7.3 Behavior activation of auto return home

During the flight, if “Finish Action” is set to "Auto Return", the aircraft will activate return after completing the mission; if lost connection action is set to “"Auto Return”, the aircraft will activate return after the RC disconnects from the aircraft for 4s. For details, please refer to “6.9 Flight Missions” in chapter 6.
During the flight, if signal lost action is set to “Return to Home”, after the RC disconnects from the aircraft for 4s, Autel Enterprise will display a warning prompt “Aircraft disconnected” and the aircraft will activate auto-return. For details, please refer to “6.5.1 Flight Control Parameter Setting".

Tips

- In the Autel Enterprise, Lost connection action can be set to “Return to Home” by default, and it also can be set to “Hovering” or “Descend”.
- Within the 4 seconds of the aircraft and the RC disconnecting, the aircraft will continue to decelerate, attempting to reconnect with the RC. If the connection is not successfully restored, the loss of connection auto return home will be activated.
- During the loss of connection auto return home process, if the aircraft re-establishes a connection with the RC, the aircraft will continue to execute the auto return home.

2.7.4 Auto return home mechanism

Table 2-1 Auto Return Home Mechanism

Aircraft Distance Triggering Return Home	Return Home Mechanism
Distance to Home Point ≤ 10 meters	The aircraft returns to the home point at the current altitude.
10 meters ＜ Distance to Home Point ≤ 25 meters	If the current aircraft altitude is below 20 meters, it will climb to 20 meters and return. If the current aircraft altitude is above 20 meters, it returns at the current altitude.

10 meters ＜ Distance to Home Point ≤ 25 meters	If the current aircraft altitude is below 30 meters, it will climb to 30 meters and return. If the current aircraft altitude is above 30 meters, it returns at the current altitude.
Distance to Home Point > 50 meters	If below the set return home altitude, it will climb to the return home altitude and return. If above the set return home altitude, it returns at the current altitude.

Remarks

- Home Point: The return point set for the aircraft in the auto return home settings.
- Aircraft distance refers to the horizontal distance from the aircraft to the Home Point.

2.7.5 Auto return home obstacle avoidance process

When the obstacle avoidance system is enabled and the lighting conditions allow the visual perception system to function, the aircraft will implement obstacle avoidance during the auto return home process as follows:

- During manual flight, in case of a lost action auto-return, low battery auto-return, or manual activation of auto-return, when an obstacle is detected in front of the aircraft, the aircraft will automatically brake within the set brake distance and automatically ascend to avoid the obstacle until it can safely fly over it.
- During flight missions, the obstacle avoidance mode is set to "Bypass". In the case of a lost action auto-return, low battery auto-return, or mission completion auto-return, when an obstacle is detected in front of the aircraft, the aircraft will automatically brake within the set brake distance and autonomously choose a random direction from the left, right, or upward directions to bypass the obstacle.

Important

- During the obstacle avoidance process, if the aircraft's ascent altitude reaches the maximum altitude limit and obstacle avoidance is not yet achieved, the aircraft will hover in place until a critically low battery landing is triggered. In this case, please manually take control of the aircraft in advance.
- When the obstacle avoidance mode is set to “Bypass”, the aircraft will prioritize planning to bypass the obstacle from the left or right direction. If neither left nor right directions are feasible, it will choose to bypass the obstacle from above.
- During flight missions, if the obstacle avoidance mode is set to "Off", the aircraft will not have obstacle avoidance capabilities.

2.7.6 Landing protection function

When the landing protection function is enabled, the aircraft will check whether the ground conditions are suitable for landing before descending. For more details, please refer to "6.5.2 OA Settings" in Chapter 6.
During the auto return home process, when the aircraft reaches above the home point, if the landing protection function is enabled, the aircraft will execute the following strategies:

1. If the landing protection function detects that the ground is suitable for landing, the aircraft will descend directly.
2. If the landing protection function detects that the ground is not suitable for landing (such as uneven terrain or water below), the aircraft will hover, prompt in the Autel Enterprise for user action, and only start descending when triggering severe low battery landing, which cannot be canceled by the user.
3. If the landing protection function cannot detect the ground conditions, the aircraft will descend to 1.2 meters above the ground and directly enter the assisted landing process.

Remarks

- Assisted Landing: During the landing process, when the aircraft reaches a height of 1.2 meters above the ground, it will automatically descend slowly without the need for the user to pull down the throttle stick.
- Before entering assisted landing, users should ensure that the landing point is suitable for the aircraft to land.

2.8 Rebuilding of the C2 Link

To ensure the safety and controllability of flight behavior, the EVO Lite Enterprise Series aircraft will continuously attempt to reestablish the C2 link with the RC after losing the C2 link. In practice, this process is divided into the following stages:

- Within the first 4 seconds of disconnection, the aircraft will automatically decelerate and attempt to restore the C2 link. If the connection is restored within 4 seconds, control of the aircraft will be returned to the RC.
- If the connection cannot be reestablished within 4 seconds, the aircraft will automatically trigger the loss of connection behavior, and the aircraft will automatically execute relevant flight controls based on the configured loss of connection behavior.
- During the execution of the loss of connection behavior, the aircraft will continue attempting to reestablish the connection. If the C2 link is reestablished with the RC during this process, the RC will still lose control of the aircraft. To regain control, the user must exit the loss of connection behavior by pressing or long-pressing the pause button "⏸" on the RC for 2 seconds.

Tips

- During the flight, as long as the aircraft and RC can communicate normally, the C2 link will be maintained continuously.

- If decoding errors persist for a certain duration, leading to communication failure, the C2 link will be disconnected, and the aircraft will enter a reconnecting state.
- After losing the C2 link, the RC will display "Remote controller and the aircraft disconnected" warning message (in red) in the status notification bar of the Autel Enterprise with a corresponding verbal warning.

2.9 Flight Restrictions and Unlocking

Important

- Before flying, please strictly adhere to local laws and regulations and carefully plan the airspace for flight.

2.9.1 Geofence system

Autel Robotics has developed a geofence system for its drones to ensure safe and legal flights. This system can dynamically update airspace restriction information worldwide. In different restricted zones, the drone's flight functions will be restricted to varying degrees. The geofence system also supports unlocking restricted zones. If users need to execute a flight mission in a specific restricted zone, they can obtain legal authorization for unlocking. The drone will then lift the relevant flight restrictions within the authorized period.
The geofence system does not necessarily align with local laws and regulations. Before each flight, users must independently inquire about and understand local laws, regulations, and regulatory requirements, taking responsibility for their flight safety.
The EVO Lite Enterprise Series aircraft is equipped with a built-in geofence system in the flight control system. Before each flight, ensure that the RC can connect to the internet to automatically update airspace restriction information, which will be synchronized to the drone. During flight, relevant airspace restriction information will be displayed in real-time on the Autel Enterprise to ensure the drone's safe and legal flight.

Tips

- Due to the inherent delay in information retrieval, the airspace restriction information of the geofence system may not completely align with the latest local laws and regulations. All information should be based on local laws and regulations.
- For temporary airspace control, Autel Robotics will promptly obtain the corresponding regulatory notices and upload the relevant airspace restriction information to the geofencing system. Users are required to synchronize and update the flight airspace restriction information when conducting flights in the relevant areas.

2.9.2 Restricted zones

In the geofence system, flight-restricted zones are categorized into four types: No-Fly Zone, Altitude-Limited Zone, Warning Zone, and Unlocked Zone. The Autel Enterprise provides different prompts based on the zone type.

Table 2-2 Flight Restrictions in Restricted Zones

Restricted Zone	Flight Restriction Explanation
No-Fly Zone (Displayed in red on the map)	Separated into Permanent No-Fly Zones and Temporary No-Fly Zones. Permanent No-Fly Zones: Factory-installed in the geofence system, regularly updated. Temporary No-Fly Zones: Added by Autel Robotics in the geofence system backend. Update Method: The RC automatically fetches the no-fly zone update information and pushes it to the aircraft. Flight Restriction: The aircraft cannot take off or fly in the current area. If the user obtains authorization from the relevant authorities in the area, they can contact Autel Robotics to request unlocking.
Altitude-Limited Zone (Displayed in gray on the map)	Autel Robotics only provides a method for altitude limitation, and users must set the altitude limit themselves. Update Method: Users need to manually enable altitude restrictions and set the limit value in the Autel Enterprise based on the legal requirements of the current country or region. For more details, please refer to "2.10 Altitude and Distance Limits" in this chapter and "6.5.1 Flight Control Parameter Setting" in Chapter 6.
Warning Zone (Displayed in yellow on the map)	Factory-installed in the geofence system, regularly updated. Factory-installed in the geofence system, regularly updated. Update Method: The RC automatically fetches the warning zone update information and pushes it to the aircraft. Flight Restriction: When flying in a warning zone, the aircraft's flight functions are not restricted (but must comply with local regulations).
Unlocked Zone (Displayed in blue on the map)	Users, with valid approval, can unlock a No-Fly Zone, allowing legal flight in the unlocked area for the specified validity period.

Tips

In the Autel Enterprise, tapping on each no-fly zone on the map will prompt the geofence information of each no-fly zone:

- No-fly zone: area name, area level (no-fly zone), affiliated area (prefecture-level city), no-fly time (only temporary no-fly zone display).
- Height restriction zone: area name, area level (height restriction zone), height restriction (AGL height restriction from the ground), affiliated area (prefecture-level city).
- Warning zone: area name, area level (warning zone), height restriction (AGL height restriction from the ground), affiliated area (prefecture-level city).
- Unlocked zone: area name, area level (unlocked zone), height restriction (AGL height restriction from the ground), affiliated area (prefecture-level city), validity period.

Remarks

- Before conducting a flight, users must understand the aircraft height restrictions in their area and set them correctly in the Autel Enterprise.
- Please note that it is not recommended to fly across adjacent areas with different legal height restrictions. The height limit set by the user is only valid for the area where the take-off point is located and cannot guarantee compliance with the relevant regulations of the cross-area. Users should adjust the corresponding height limit in time when flying across areas.

The aircraft has a certain initial speed when flying in the air. To prevent the aircraft from mistakenly entering the no-fly zone (when not lifted) and the warning zone, the geofence system sets a buffer zone with a horizontal distance of 250 m and a vertical distance of 50 m outside the boundaries of the no-fly zone and warning zone.

Table 2-3 Buffer Zone Description

Buffer Zone Type	Buffer Zone Description
Buffer zone of the no-fly zone	When the aircraft not lifted flies towards the no-fly zone from the outside: When the aircraft touches the boundary of the buffer zone, the Autel Enterprise will display a warning alert "Approaching a Flight Restricted Area" and the aircraft will automatically start to decelerate and eventually brake and hover within the buffer zone.
Buffer zone of the warning zone	When the aircraft flies towards the warning zone from the outside: The aircraft can fly directly into the warning zone, during which the aircraft is not restricted. When the aircraft touches the boundary of the buffer zone, the Autel Enterprise will display a warning alert "The aircraft is close to the warning zone. " and after entering the warning zone, the Autel Enterprise will display " The aircraft is in the warning zone, please fly with caution." to remind users to be cautious.

Remarks

- When the aircraft enters ATTI mode after GNSS signal loss and visual positioning off, the no-fly zone function is unavailable.
- If the aircraft not lifted mistakenly enters the no-fly zone in the absence of GNSS signal, the aircraft will automatically land after regaining the GNSS signal, and during the landing process, the throttle joystick does not work, but users can control the aircraft to move horizontally so as to land in a safer place.
- When the aircraft hovers in place in the buffer zone, users can control the aircraft to exit the buffer zone along the normal direction of the buffer zone boundary.

When conducting a flight in the unlocked zone, if within the airspace and valid time of the lifting authorization, the aircraft can fly normally; once it exceeds the airspace and valid time of the lifting authorization, the aircraft will execute the airspace restriction operation of the current area.

2.9.3 Import UGZ

The aircraft supports the UAS Geographical Zones (UGZ) import function, allowing users to obtain the restricted flight zone data file of their country or region and upload it to the flight control system of the aircraft. When the aircraft approaches the relevant airspace during flight, it will execute corresponding status responses (including alerts, deceleration, etc.) to ensure flight safety.

Tips

- The UGZ import function supports importing JSON-type no-fly zone data files. Users can import no-fly zone data files published by the aviation management department.
- Operation method: Copy the JSON file to the root directory of the RC, on the map interface of the Autel Enterprise, tap "" > "Import Geo-fence" on the right side. Follow the page instructions for relevant operations.

2.9.4 Unlocking no-fly zones

To apply for unlocking a specific airspace within a no-fly zone, prepare the following information in advance according to your flight plan:

1. Identity and contact information of the applicant.
2. Unlock permit: a scanned copy or image of the valid permit for the flight application issued by local authorities (local public security bureau, aviation management department, or any other relevant organization/agency).
3. Unlocked zone: a cylindrical area. It includes the following information:
   - Name of the unlocked zone.
   - Coordinates of the center point of the flight airspace plane (latitude and longitude, with 6 decimal places).
   - Radius of the flight airspace plane (in meters, with 2 decimal places).

- Flight altitude (in meters, with 2 decimal places).

4. Unlock date: Enter the unlock date according to the valid permit. The date is recommended to be accurate to day/hour/second.
5. Aircraft S/N (Serial number): Multiple serial numbers can be applied at once.
6. Autel account of UAS operator: Multiple accounts can be applied at once.

Log in to the official website of Autel Robotics at www.autelrobotics.com/service/noflight/, enter the relevant information, and complete the waiver application.

After the unlocking application is approved, you will obtain an unlock permit. The permit contains the aircraft serial number, UAS operator account, and unlocked zone (including the validity period).

Tips

- After submitting the lifting application, the approval will be completed within 24 hours, and the lifting will be completed within 48 hours.

2.10 Altitude and Distance Limits

The altitude limit will restrict the maximum flight altitude of the aircraft; the distance limit will restrict the maximum flight radius distance of the aircraft (with the take-off point as the center). Users can set the altitude and distance limits in the Autel Enterprise to ensure the safe flight of the aircraft. For more details, please refer to "6.5.1 Flight Control Parameter Setting" in Chapter 6.

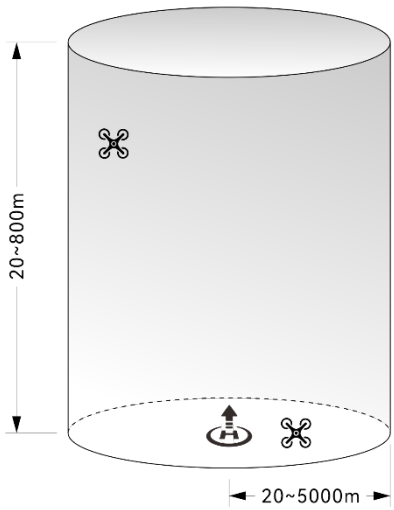

Fig 2-2 Altitude and Distance Limitation Diagram

Tips

- In the Autel Enterprise, the allowable range for altitude restriction is 20 ~ 800 m, and the allowable range for distance restriction is 20 ~ 500 m. During actual flight, the set maximum altitude limit should not exceed the altitude restricted by local laws and regulations, such as the maximum flight altitude of aircraft in China's Mainland, the United States, the

European Union and other countries and regions should not exceed 120 meters or 400 feet.
- When setting the maximum altitude limit, the rationality of the return altitude should be fully considered, and the return altitude should not exceed the maximum altitude limit.
- The return altitude should be set to be higher than the highest obstacle in the flight area.

2.11 Aircraft Calibration

2.11.1 Compass calibration

The compass (magnetometer) has been calibrated when the aircraft leaves the factory, and users usually do not need to calibrate it.
If the Autel Enterprise prompts an alert “Please calibrate compass”, please calibrate it according to the following steps.

Important

- The compass is very sensitive to electromagnetic interference, which can cause compass errors and a decrease in flight quality.
- Please choose an open outdoor area for calibration.
- Please stay away from strong magnetic field areas or large pieces of metal during calibration, such as magnetic ore, parking lots, construction areas with underground steel bars, near underground or overhead power transmission lines, etc.
- Please do not carry ferromagnetic materials or metal objects with you during calibration, such as mobile phones, watches, etc.
- During the calibration process, please stay away from charged objects and keep the aircraft 1.5 meters above the ground.
- During the calibration process, please do not turn off the power of the aircraft or start the motor.

Table 2-4 Compass Calibration

Step	Operation	Diagram
1	After turning on the aircraft and RC, tap “”>” " > “" > "Compass Calibration" > "Start calibrating" on the main interface of Autel Enterprise. When the calibration process starts, When the calibration process begins, the rear arm light of the aircraft turns yellow and blinks.	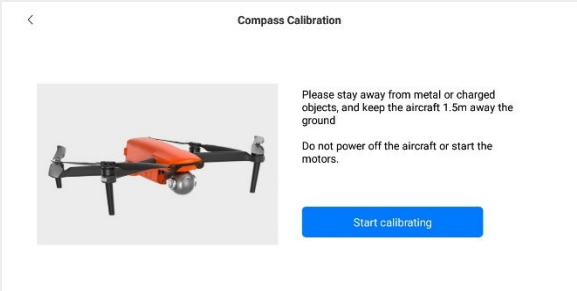

2	Hold onto the aircraft to keep it in a horizontal position. Rotate horizontally 360° until the rear arm light of the aircraft turns green and is always on.	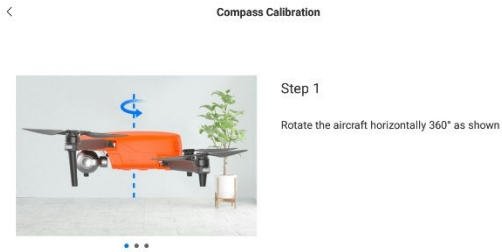
3	Hold onto the aircraft to keep it in a vertical position with the nose pointing upward. Rotate horizontally 360° until the rear arm light of the aircraft turns green and is always on.	
4	Hold onto the aircraft, positioning the nose to the left and the side facing downward. Rotate horizontally 360° until the rear arm light of the aircraft turns green and is always on.	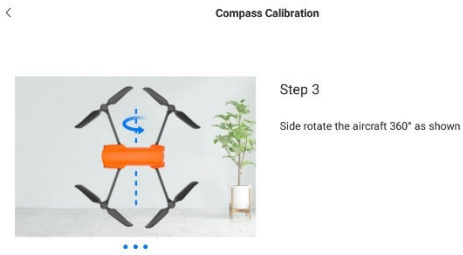

Tips

- Please follow the calibration steps as instructed on the Compass Calibration page of the Autel Enterprise.
- If the calibration fails, the rear arm light of the aircraft will turn solid red. In this case, repeat the above steps.
- If the compass still cannot function properly after calibration, move the aircraft to a different location and calibrate again.

2.11.2 IMU calibration

The Inertial Measurement Unit (IMU) is calibrated during the manufacturing of the aircraft and typically does not require user calibration.
However, if Autel Enterprise prompts an alert "Cannot take off due to IMU error. Calibrate IMU first" or "Please calibrate IMU", follow the steps below for IMU calibration.

Important

- Follow the prompts on the IMU calibration page in the Autel Enterprise to position the aircraft and ensure it remains in a stationary state.
- Place the aircraft on a flat surface and refrain from moving, turning off, or restarting the aircraft during the calibration process.
- The gimbal will be inactive during the IMU calibration process.

Table 2-5 IMU Calibration

Step	Operation	Diagram
1	After turning on the aircraft and RC, tap " ">" " " > " " > "IMU Calibration" > "Auto Calibration" on the flight interface of Autel Enterprise. Follow the instructions in the interface to calibrate the IMU.	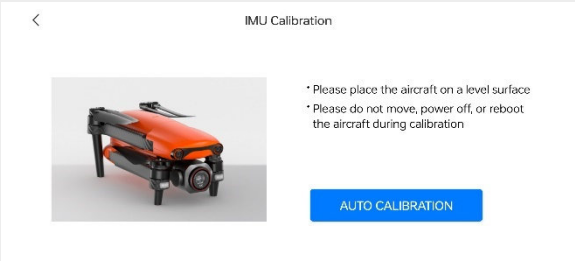
2	Fold the arms of the aircraft and place it horizontally on the ground until the interface prompts next step.	
3	Flip the aircraft 180°, placing it with the belly facing up on a flat surface, until the interface prompts next step. Please be careful to protect the lens on the back of the aircraft during this process.	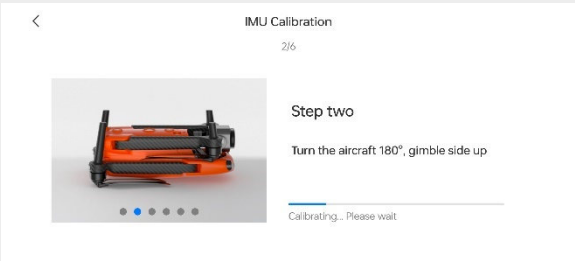
4	Place the left side of the aircraft flat on the ground until he interface prompts next step.	
5	Place the right side of the aircraft flat on the ground until the interface prompts the next step.	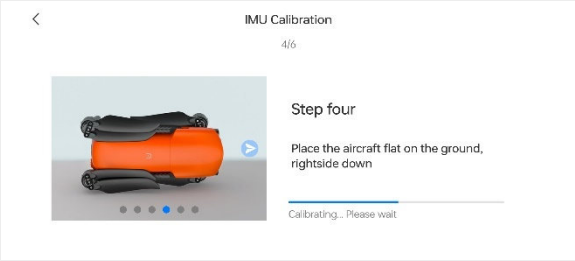

6	Fold the arms of the aircraft and place it with the nose facing upward on the ground until the App prompts that the calibration is successful. Please be careful to protect the lens on the rear of the aircraft during this process.	

Tips

- If the calibration fails, the rear arm light of the aircraft will turn solid red. In this case, you should repeat the above steps.
- After the IMU calibration is completed, please re-boot the aircraft.

2.11.3 Gimbal auto calibration

The gimbal is calibrated during the manufacturing of the aircraft and typically does not require user-initiated auto-calibration. However, if there are abnormal gimbal rotation angles, follow the steps below for automatic calibration.

Table 2-6 Gimbal Calibration

Step	Operation	Giagram
1	Place the aircraft on a flat surface, and after turning on both the aircraft and the RC, keep the aircraft in a stationary state. On the flight interface of the Autel Enterprise, tap " ">-" ">-" "> "Start calibrating" in sequence.	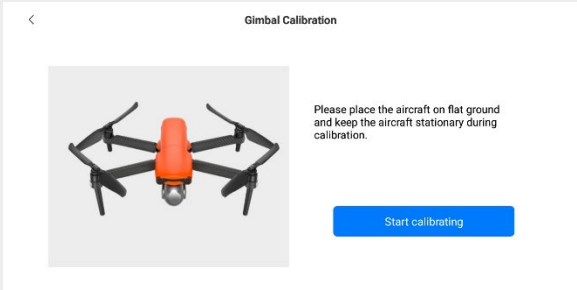
2	Wait, the screen prompts "Calibration successful" and then the gimbal automatically calibrates successfully.	

2.12 Emergency Stop Propellers During Flight

During flight, if the aircraft's motors experience power damage or failure (such as damaged or missing propeller blades, motor failure) resulting in the inability to control the aircraft normally, the emergency propeller stop function can be activated. Simultaneously, push the dual joysticks

on the RC inward or outward to force the propeller blades to stop rotating, allowing the aircraft to free-fall for a forced landing. This helps reduce potential damage to property and injuries to ground personnel caused by aircraft malfunctions.
In the event of a failure, users should attempt to maneuver the joystick to move the aircraft away from crowds or buildings, decrease the aircraft's altitude and horizontal speed, and then execute the emergency propeller stop function.

Important

- Operation path: On the main interface of the Autel Enterprise, tap " "><" "><-"⊙"><"Safety"><"Emergency Stop Propellers During Flight", and follow the instructions on the interface to conduct operations. For details, please refer to "6.5.7 More".
- If the propellers are stopped when the aircraft has a certain initial velocity, the aircraft will follow a parabolic trajectory during free fall. Do not stop the propellers in this unpredictable scenario.
- After completing the forced landing, please contact Autel Robotics promptly for inspection of the power system.

2.13 Direct Remote Identification

The Direct Remote Identification (DRI) system allows the registration number of the unmanned aircraft system operator (Remote ID) to be uploaded to the system. During flight, the system broadcasts part of non-sensitive data such as the operator's registration number, unique serial number of the unmanned aircraft, timestamp, geographic location of the unmanned aircraft, altitude above ground or takeoff point, route measured clockwise from true north, ground speed of the unmanned aircraft, and the operator's geographic location (if available, otherwise, the geographic location of the takeoff point) in real-time to mobile devices within its broadcast range. This system effectively controls potential risks to public safety posed by unmanned aircraft during flight and provides effective information and data tools for the supervision of unmanned aircraft flights.
The EVO Lite Enterprise Series aircraft supports the DRI system and uses Wi-Fi (Wi-Fi Beacon, 802.11n) for broadcasting. Enable the DRI system by configuring it in the Autel Enterprise.

Tips

- Operation path: On the flight interface of the Autel Enterprise, tap" "><"⊙"><-"⊙"><- >" Safety" >" Remote ID", and follow the on-screen instructions for relevant operations. For more details, please refer to "6.5.7 More" in Chapter 6.

2.14 Standard Flight Operation Process

2.14.1 Pre-flight inspection checklist

Before every flight operation, perform a comprehensive pre-flight check by following these steps to ensure safe flight:

- Ensure the RC and the aircraft have sufficient battery power, and the aircraft battery is securely installed with the battery unlock button in the locked position.
- Ensure the aircraft propellers are securely installed without damage or deformation, the motor and propeller surfaces are clean and free of foreign objects, and the propellers and arms are in fully extended positions.
- Ensure there are no foreign objects, dirt, or fingerprints on the lenses of the aircraft's visual cameras, gimbal camera, or supplementary lights, and they are not obstructed by mounts or other accessories on the aircraft.
- Confirm that the gimbal protective cover has been removed, and the gimbal's three-axis movements are normal.
- Ensure the microSD card is inserted into the aircraft, the microSD card slot and USB-C interface are covered with the rubber protective cover to maintain product protection.
- Ensure that the RC antenna is tightened securely and expanded to the optimal angle.
- Place the aircraft in an open and level outdoor area, ensuring there are no obstacles, buildings, trees, etc. Stand at least 5 meters away from the rear of the aircraft.
- Ensure the aircraft powers on and is connected to the RC, and the aircraft motors and gimbal camera are functioning properly.
- Confirm that the aircraft and RC have been upgraded to the latest versions as prompted.
- Address all warnings and errors displayed on the Autel Enterprise.
- Enter the Autel Enterprise settings page to configure flight control parameters, obstacle avoidance systems, joystick modes, and other relevant flight safety parameters. Familiarize yourself with flight operations to ensure parameter settings meet your needs and guarantee flight safety.
- If multiple aircraft are flying simultaneously, maintain an appropriate aerial distance to prevent safety accidents.

2.14.2 Basic flight procedure

This aircraft provides three joystick modes: Mode 2 (USA), Mode 1 (China), and Mode 3 (Japan). Each mode has different control logic for the aircraft. The default mode is Mode 2, and users can switch modes in the Autel Enterprise based on their control preferences (refer to “6.5.3 RC Settings” in Chapter 6 to swap joystick modes). The following are the basic flight operations:

1. Please refer to "2.14.1 Pre-flight inspection checklist" in this chapter for pre-flight preparations.
   - Place the aircraft in an open and level outdoor area, ensuring no obstacles are present. Stand at least 5 meters away from the rear of the aircraft.
   - Long-press the smart battery power button for 3 seconds to power on the aircraft, wait for the rear arm light to turn into slow green flashing (indicating normal status).
   - Long-press the RC power button for 2 seconds to turn on the RC.
2. Please refer to “4.10.3 Starting/Stopping the Aircraft Motor" in Chapter 4 to use the RC to start the aircraft and take off.

3. Please refer to “4.10.1 Stick Modes" in Chapter 4 to carefully control the aircraft.
4. Please refer to "4.10.3 Starting/Stopping the Aircraft Motor" in Chapter 4 to land the aircraft and then turn off the motors.

2.15 List of Safeguard

Before flight, please learn the following safeguard information, which helps you handle abnormal situations in a correct and safe way.

Table 2-7 List of Safeguard

No.	Safety Function	Refer To
1	Auto Return Home	“2.7 Auto Return Home” in this chapter
2	Emergency Stop Propellers During Flight	“2.12 Emergency Stop Propellers During Flight” in this chapter

Chapter 3 Aircraft

3.1 Aircraft Registration and Activation

When unboxing the product for the first time, you need to register and activate the EVO Lite Enterprise Series aircraft before using it. By default, the aircraft is pre-paired with the RC at the factory. After turning on the aircraft and the RC, the RC will automatically prompt registration and activation. Please follow the steps in the Autel Enterprise to activate the aircraft.

Important

- Make sure that the RC is connected to the Internet after being turned on for the first time. Otherwise, the activation will fail and the aircraft inactivated cannot be used.
- In registration, please select country or region accordingly and carefully as the aircraft can only fly in selected country (region) and other countries (regions) will automatically be set as no-fly zones.
- If registration and activation fails, please contact Autel Robotics After-Sales Support for assistance.
- For how to pair the aircraft with the RC, please refer to "4.9 Frequency Pairing With the Remote Controller" in Chapter 4.

3.2 Aircraft Components

The EVO Lite Enterprise Series aircraft includes two models: the EVO Lite 6k Enterprise Aircraft and the EVO Lite 640T Enterprise Aircraft. Apart from differences in the gimbal camera, the other features of the two models are consistent. The picture of the EVO Lite 6K Enterprise aircraft is as follows:

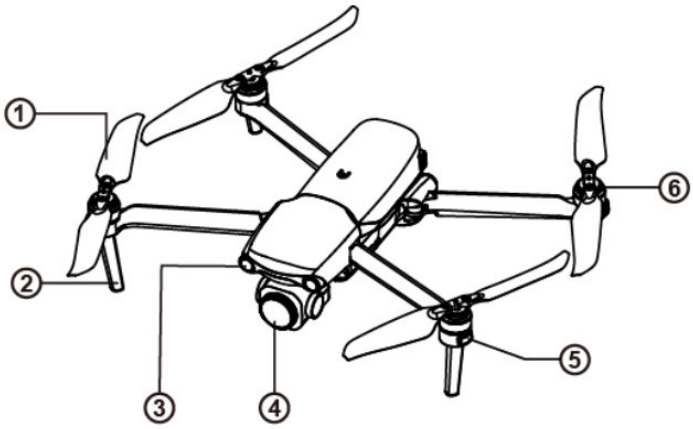

Fig 3-1 Aircraft Overhead View

Table 3-1 Aircraft Overhead View Details

No.	Name	Description

1	Propeller	Rotates in the air to generate thrust to propel the aircraft forward.
2	Landing Gear (built-in antenna)	Used to support the aircraft to avoid damage to the bottom of the fuselage. Built-in antenna to communicate with RC
3	Forward Visual Perception System	Used to sense the obstacles ahead and avoid the aircraft from colliding with them.
4	Gimbal Camera	Integrates multiple sensors for stable shooting or measurements during flight.
5	Front Arm Light	Used to identify the nose direction of the aircraft.
6	Motor	Used to drive the propeller to rotate.

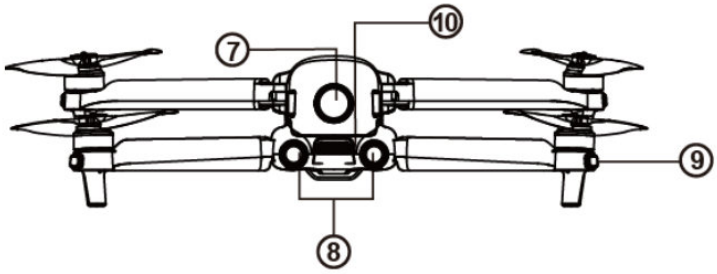

Fig 3-2 Aircraft Rear View

Table 3-2 Aircraft Rear View Details

No.	Name	Description
7	Power button	Press and hold the power button for 3s to start the aircraft.
8	Rear Visual Perception System	Used to sense the obstacles in the rear and avoid the aircraft from colliding with them.
9	Rear Arm Light	Used to display the current flight status of the aircraft.
10	Exhaust vent	Used to expel the heat generated by the aircraft

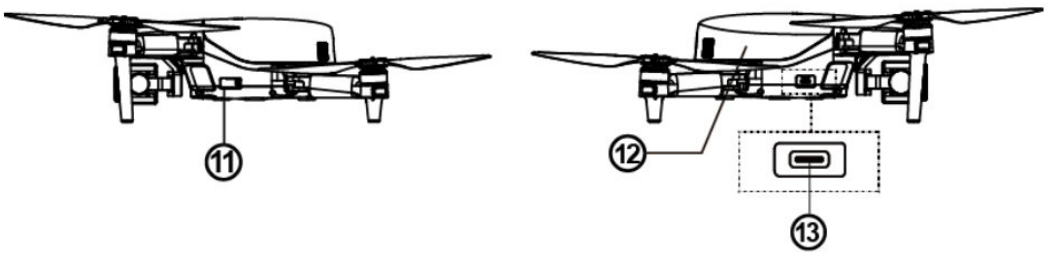

Fig 3-3 Aircraft Side View

Table 3-3 Aircraft Side View Details

No.	Name	Description
11	microSD Card Slot	For inserting a microSD card.
12	Smart Battery	Used to provide energy for aircraft operation.
13	USB-C Interface	Used to connect to a computer for firmware updating, debugging and data transferring.

⚠ Warning

- The USB-C interface of the aircraft is not available for charging. Please do not connect a charger to it. For aircraft charging, refer to "5.3.4 Charging the smart battery" in Chapter 5.

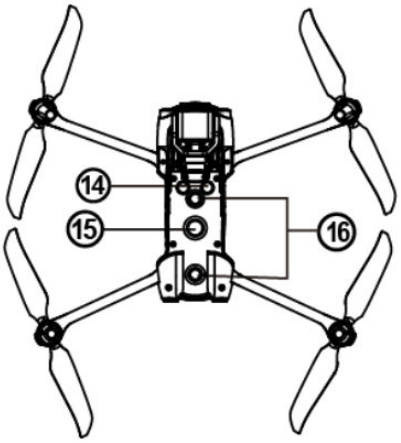

Fig 3-4 Aircraft Down View

Table 3-4 Aircraft Down View Details

No.	Name	Description
14	Ultrasonic Sensor	Used to sense obstacles beneath the aircraft, avoiding collisions with them.
15	Auxiliary Light	An LED auxiliary light. It is used to enhance the ambient brightness of the landing area during the landing process, improve downward visual sensing performance, and ensure the safe landing of the aircraft.
16	Downward Visual Perception System	Used to sense obstacles below, and to the left and right of the aircraft and avoid collisions.

⚠ Warning

- The interfaces on both sides of the aircraft body are equipped with rubber protective covers, designed to protect the microSD card slot and USB-C interface. Please ensure that the rubber protective covers are securely closed during the flight process.
- Do not disassemble components that were installed at the factory (except for components explicitly allowed in this manual), otherwise, the product will lose its warranty eligibility.

3.3 Propeller

Propellers are consumable parts that require regular maintenance and replacement to ensure the safe flight of the aircraft. The EVO Lite Enterprise Series aircraft uses a quick-release propeller design, making it easy for you to replace them.

3.3.1 Replacing propellers

The propellers are installed in the aircraft by default at the factory, and reinstallation is not required. If the propellers are damaged (e.g., broken or damaged blades), please replace them with new ones before a flight.

- **Keep body parts away from fan blades.**

Tips

- Aircraft propellers are consumable parts. If needed, please purchase them from Autel Robotics.
- The propeller model is marked on the blade. You can check the model of a propeller at the edge of the blade near the propeller center shaft.
- Propellers cannot be installed on the wrong propeller mounts. Please carefully distinguish between propellers and mounts.

■ Detaching the Propellers

1. Press and hold the smart battery power button for 3 seconds to power off the aircraft.
2. First hold the motor on the arm below the propeller to prevent it from rotating, press down on the propeller center shaft firmly, and then turn it in the unlocking direction to detach the propeller.

■ Installing the Propellers

When installing the propellers, strictly follow the following instructions:

1. Make sure that the aircraft is powered off before installing the propellers.
2. The aircraft needs to be installed with two models of propellers, that is, CW and CCW, with two of each model. The CCW propellers have a white circle mark at the center shaft, while the CW propellers do not have this mark at the center shaft.

3. There are two types of propeller mounts on the front and rear arms of the aircraft. The mounts with a white circle mark at the center shaft are for CCW propellers, while the mounts without this mark are for CW propellers.
4. Place a propeller on the corresponding propeller mount. Make sure that the buckle at the center shaft of the propeller aligns with the slot on the mount. Hold the motor on the arm below the propeller to prevent it from rotating, press down on the propeller center shaft firmly, and then turn it in the locking direction marked on the center shaft to secure the propeller in place.

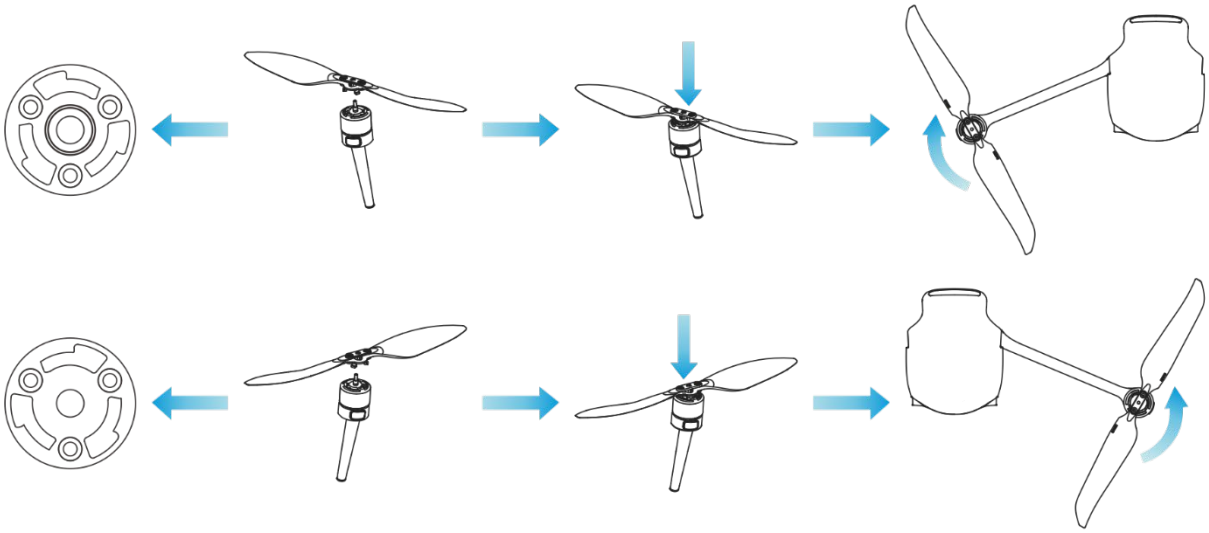

Fig 3-5 Install the Propellers

Table 3-5 Propeller Installation Details

Propeller Model	CCW (White circle on the center shaft)	CW (No white circle on the center shaft)
Installation Area	Mounts with a white circle mark	Mounts without white circle mark
Lock/Unlock	Lock orientation: Turn the propeller this way: to tighten it. Unlock orientation: Turn the propeller this way: to remove it.	

⚠ Warning

- The propellers can rotate at a maximum speed of 8000 RPM. Please operate with caution.
- Before each flight, make sure that all propellers are in good condition. If there are aged, damaged, or deformed propellers, please replace them before the flight.
- Before each flight, make sure that all propellers are mounted correctly and securely.
- Please use the propellers provided by Autel Robotics. Do not mix propellers of different models.
- Before replacing propellers, make sure that the aircraft is powered off.
- Propeller edges are sharp. When replacing propellers, it is recommended to wear protective gloves.
- Stay away from rotating propellers or motors to avoid injuries.

- Before testing the aircraft on the ground, make sure that the propellers are removed.

3.3.2 Storing propellers

After using the aircraft, fold the arms as shown below and store the propellers in the rugged case.

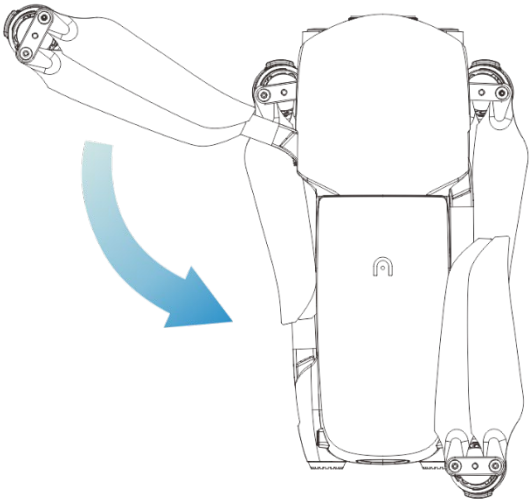

Fig 3-6 Store the Propellers

Important

- Before folding the arms, you should turn off the power of the aircraft. Store the propeller and fold the rear arms first, then fold the front arms.

3.4 Arm Light

After takeoff, the four arms of the aircraft each have an LED indicator at the end. The front arm light will periodically flash to assist users in identifying the front direction of the aircraft. The rear arm lights will display the current status of the aircraft.

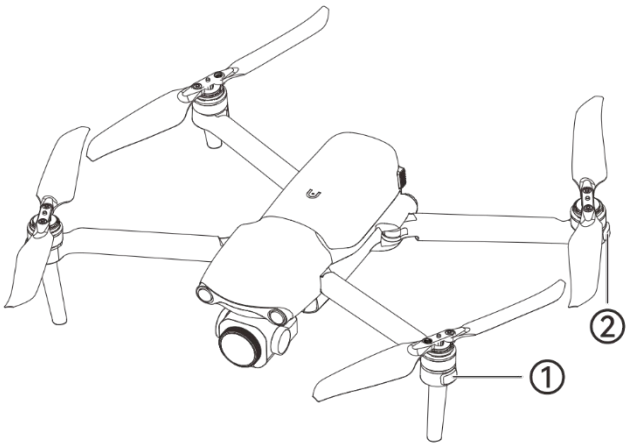

Fig 3-7 Arm Light

Table 3-6 Arm Light Status Details

Mode	Front Arm Light (1)	Rear Arm Light (2)
GNSS Mode ATTI Mode	During normal flight, the green light will flash slowly in cycles of (1s on/1s off) to distinguish the nose direction of the aircraft.	During normal flight, it will alternatively flash according to a cycle of (green light on for 1s /red light on for 1s) to distinguish the tail direction of the aircraft

Table 3-7 Rear Arm Light Status Details

Indicator status (R: red G: green Y: yellow)	Definition
Normal	
RYG–Alternating Flashing	System Self-Test
Compass/IMU Calibration	
Y–Fast Flashing	Start Calibration
G–Always On	Calibration Successful
R–Always On	Calibration Failed
Warning	
Y–Fast Flashing	Remote Controller Not Connected to Aircraft
R–Slow Flashing	Low Battery Warning/ Illegal Battery
R–Fast Flashing	Critical Low Battery Warning
R–Always On	IMU Abnormal

- Slow flashing: flashes once every 2s (0.5s on/1.5s off).
- Fast flashing: flashes twice every 1s.
- Alternating flashing: flash alternately in different colors.

When the aircraft performs power-on self-test and any of the following situations occurs, the following strategies will be implemented to ensure flight safety.

Table 3-8 Power-On Self-Test Flight Strategy

Flight strategy	Takeoff Denied	Takeoff Accepted
Abnormal Items	• IMU Abnormal • Battery Verification Abnormal • Aircraft ESC Abnormal	• Compass Abnormal • Aircraft in ATTI Model

	• Internal Communication Abnormal • Barometer Abnormal	

3.5 Auxiliary Bottom Light

The aircraft is equipped with an auxiliary bottom light (LED auxiliary light) at the bottom of the fuselage. The lights are used to assist the downward Visual Perception System when the aircraft is landing in weak light environments, so as to ensure better visual positioning performance and enhance the landing safety of the aircraft.

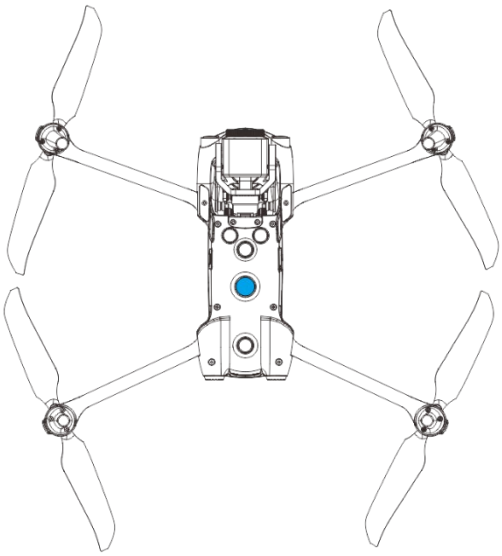

Fig 3-8 Auxiliary Light

Tips

- For details about how to turn on or off the auxiliary light, please refer to "6.4 Shortcut Toolbar" and "6.5.7 More" in chapter 6.

Warning

- When the auxiliary light is set to auto mode, if the aircraft is landing and the environment light is poor, the auxiliary light automatically turns on at 3 meters above the ground and it turns off when the aircraft lands successfully.

3.6 Camera

- The gimbal camera of the EVO Lite 6K Enterprise Aircraft is equipped with a 1-inch CMOS image sensor, capable of capturing stable 6K high-definition videos and 20 million pixels photos.

- The gimbal camera of the EVO Lite 640T Enterprise Aircraft is equipped with a 1/2-inch CMOS image sensor, capable of capturing stable 48 million pixels photos and infrared photos of 640 x 512 resolution.

3.6.1 Camera differences

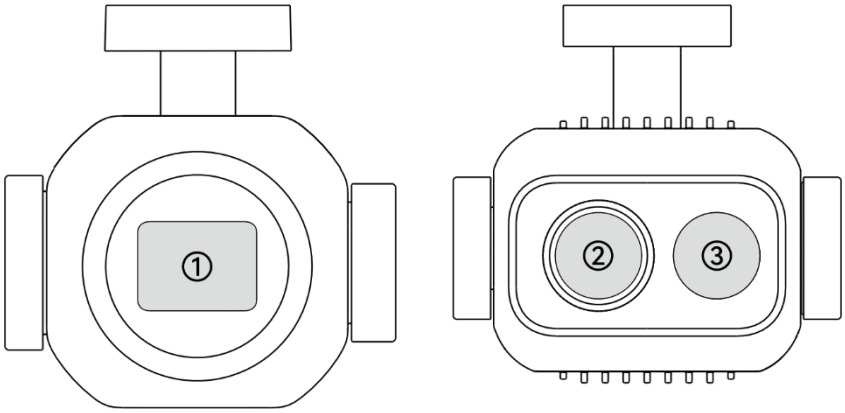

Fig 3-9 EVO Lite Enterprise Series Aircraft Gimbal Camera

Table 3-9 EVO Lite Enterprise Series Aircraft Gimbal Camera Details

No.	name	Description
1	Wide Angle Camera	The wide-angle camera of EVO Lite 6K Enterprise aircraft is used to capture images with a larger field of view within a relatively short shooting distance. 1 inch CMOS sensor, Effective pixel count: 20 million. Field of view: 82 degrees.
2	Infrared Thermal Imaging Camera	The infrared thermal imaging camera of EVO Lite 640T Enterprise aircraft is used for radiometric measurement and night vision, which can monitor the temperature distribution of the measured target in real time, so as to judge the state of the target. Radiometric temperature range: -20°C~+150°C (high gain mode) and 0°C + 550°C (low gain mode).
3	Wide Angle Camera	The wide-angle camera of EVO Lite 640T Enterprise aircraft is used to capture images with a larger field of view within a relatively short shooting distance. 1/2” inch CMOS sensor, Effective pixel count: 48 million. Used to shoot 8K pictures

⚠ Warning

- Do not point the infrared thermal imaging camera at intensive energy sources such as the sun, lava, laser beams, and molten iron, to avoid damage to the infrared detector.

- The temperature of the observation target should be less than 600 °C. Observing objects with temperatures above this limit may result in damage to the infrared detector.

3.6.2 Camera operations

■ RC Control

- Right dial wheel: Used to adjust the zoom factor of the selected camera. Turn left to reduce the zoom factor, and turn right to increase the zoom factor.
- Video recording/Shooting button: In shooting mode, press the button to shoot a picture; in recording mode, press this button to start/end recording video.

Tips

- For the control operations of the RC, please refer to "4.1.1 Remote controller components" in Chapter 4.
- Currently video recording/shooting button only supports shooting and it will support recording after function upgrade.

■ Autel Enterprise Control

For the control operations and the functions related to the camera in the Autel Enterprise, please refer to "6.8 Camera Interfaces" in Chapter 6.

3.7 Gimbal

The EVO Lite Enterprise series aircrafts are equipped with a three-axis stabilized gimbal with a high-precision motor structure, which can ensure stable camera shooting when the aircraft is flying.

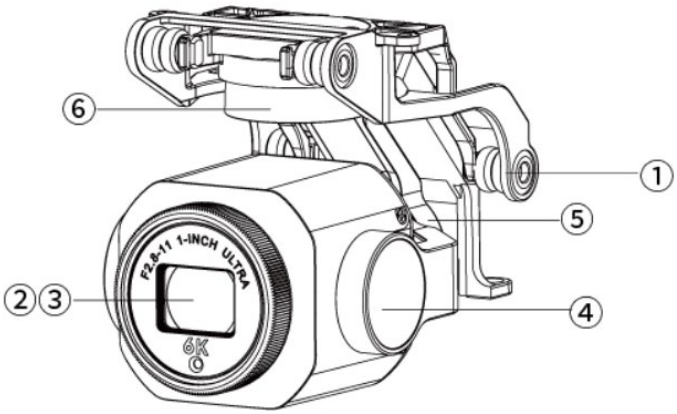

Fig 3-10 Gimbal Structure of EVO Lite 6k Enterprise Aircraft

Tips

- Please note that the gimbals of those two aircrafts are similar in structure while only differing in camera layout. In the following parts, the gimbal structure of the EVO Lite 640T Enterprise aircraft will not be described.

Table 3-10 Gimbal Structure Details of EVO Lite 6K Enterprise Aircraft

No.	Name	Description
1	Dampener Mount	Used to support dampeners and gimbal cameras, etc.
2	Camera	Used to capture pictures or videos.
3	UV Lens	Used to filter ultraviolet rays, protect the lens.
4	Pitch Axis Motor	Used to control the moving range of the gimbal to rotate up or down (mechanical range: -135°~45°, controllable movement range: -90°~30°).
5	Yaw Axis Motor	Used to control the moving range of the gimbal to rotate left or right with its own axis (mechanical range: -45°~45°).
6	Roll Axis Motor	Used to control the moving range of the gimbal to roll left or right (mechanical range: -90°~90°).

3.7.1 Gimbal mechanical rotation range

The mechanical rotation ranges of the pitch, yaw, and roll axes of the gimbal are shown below.

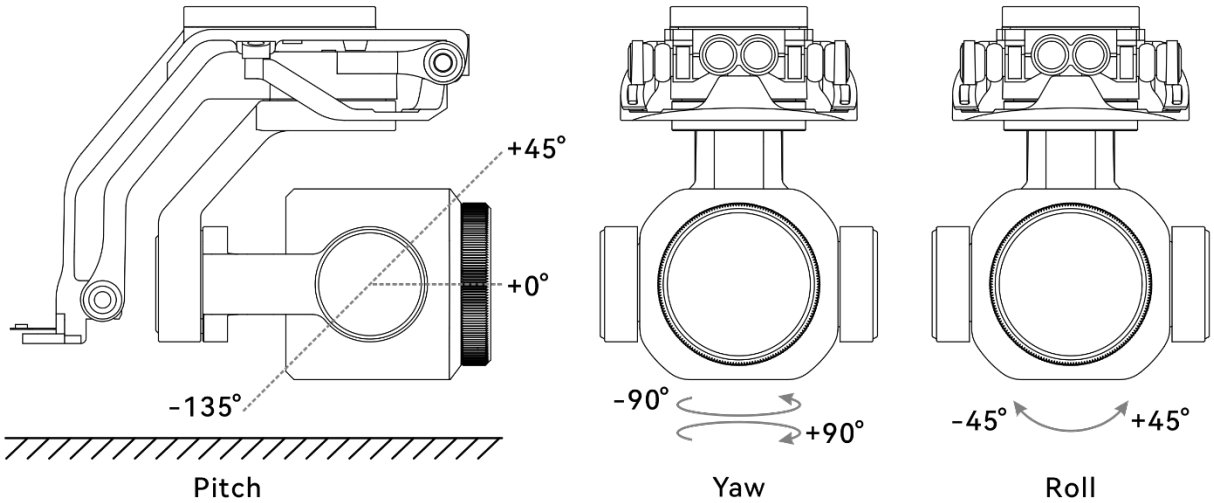

Fig 3-11 Mechanical Rotation Range of the Gimbal of the EVO Lite Enterprise Series aircraft

Remarks

- Users can control the pitch rotation range of the gimbal: -90° to 30°. For details on setting, please refer to "6.5.6 Gimbal Settings" in chapter 6.

- For details about the gimbal of the EVO Lite 640T Enterprise aircraft, please refer to "A2 Gimbal camera" in appendix A.

3.7.2 Gimbal operations

■ RC Control

- Left Dial Wheel: Used to adjust the gimbal pitch. Turn left to rotate the gimbal down and turn right to rotate the gimbal up.
- RC Customizable Button C: After setting the C button to "Re-center/45°/Down", you can switch the gimbal angle by single-clicking the C Button.

Tips

- For the control operations of the RC, please refer to "4.1.1 Remote controller components" and "4.10.1 Custom button C" in Chapter 4.

■ Autel Enterprise control

For the gimbal control operations in the Autel Enterprise, refer to "6.8 Camera Interfaces" in Chapter 6.

Warning

- When the aircraft is not in use, especially when the aircraft is being transferred or stored, be sure to use the protective cover of the gimbal to fix the gimbal, so as to avoid damage to the gimbal camera due to accidental rotation or bumping.
- Please remove the protective cover of the gimbal before turning on the aircraft, otherwise, it may cause damage to the gimbal motor and circuit.
- When turning on the power switch of the aircraft, the gimbal will automatically rotate to perform self-check and calibration, please make sure there is no object near the gimbal to hinder its movement.
- Do not disassemble the gimbal at will. Otherwise, warranty eligibility will be lost.

3.8 Flight Control System

EVO Lite Enterprise Series aircraft achieves stable and convenient flight control through its built-in intelligent flight control system. The system supports a number of advanced functions, including auto-return, failsafe, and visual positioning system.

Table 3-11 Flight Control System

Module	Description
IMU	A three-axis gyroscope and a three-axis accelerometer measure acceleration and angular velocity.

Compass	Measures the geomagnetic field and provides reference information on the aircraft heading.
GNSS receiver	Receives global satellite navigation signals to measure longitude, latitude, and altitude.
Barometer	Measures atmospheric pressure and is used to determine the altitude of the aircraft.
Visual Perception System	Provides the aircraft with front, rear, and down obstacle awareness around the fuselage.
Ultrasonic sensor	Measures the distance between the aircraft and the ground.

3.8.1 Flight status

Depending on the availability of GNSS signals and flight conditions, the aircraft can automatically switch between three flight modes.

Table 3-12 Flight Status

Mode	Description
GNSS Mode	GNSS mode is activated when the aircraft detects an appropriate GNSS signal. In GNSS mode, if the obstacle avoidance system is turned on, the system will provide auxiliary information to more accurately locate and avoid obstacles, provide stable and smooth flight control, and support auto-return, failsafe, and other safety functions.
Visual Positioning Mode	When the GNSS signal detected is not strong enough to activate GNSS mode, and it meets certain environmental and altitude requirements (ensure that the surrounding environment is well-lit, the ground texture is clear, and the altitude of the aircraft must be within the observation range of the Visual Perception System), the visual positioning mode will be activated.
ATTI Mode (Attitude Mode)	When there is no GNSS signal and the environment and altitude cannot meet the requirements of the Visual Perception System, that is, when there is no GNSS signal and visual positioning failure at the same time, the ATTI mode will be activated automatically. In this mode, the obstacle avoidance system is disabled, and the aircraft only controls the altitude through the barometer.

⚠ Warning

- If you have not fully mastered the flight control of the aircraft and the aircraft is in ATTI mode, please do not take off rashly.

Remarks

- When the GNSS signal is lost, the aircraft will not be able to obtain real positioning information through GNSS.
- When the aircraft is in the visual positioning mode, the maximum speed limit is 3 m/s in standard mode and 10 m/s in ludicrous mode.
- In ATTI mode, t the maximum speed of the aircraft in corresponding speed mode is not affected.

3.8.2 Flight modes

The aircraft has varying flight performance in different flight modes. You can set the flight mode of the aircraft in the Autel Enterprise. For more information, please refer to " 6.3 Status Notification Bar" and "6.5.1 Flight Control Parameter Setting" in Chapter 6.

Table 3-13 Flight Modes

Flight Modes	Description
Slow	Forward, backward, left, and right: 3.0 m/s; Ascend: 3.0 m/s; Descend: 3.0 m/s.
Smooth	Forward, backward, left, and right: 5.0 m/s; Ascend: 3.0 m/s; Descend: 2.0 m/s.
Standard	Forward, backward, left, and right: 10 m/s; Ascend: 5.0 m/s; Descend: 3.0 m/s.
Ludicrous	Forward, backward, left, and right: 18 m/s; Ascend: 6.0 m/s; Descend: 4.0 m/s.

Tips

- The slow mode can also be regarded as novice mode. In this mode, the maximum flight altitude is 30 meters.

Warning

- If you have not fully mastered the flight control of the aircraft, it is not recommended for you to switch to Ludicrous mode.
- When flying close to the ground, it is recommended to switch to smooth mode for safety.
- When switching to Ludicrous mode, the obstacle avoidance function of the aircraft will become unavailable, and the aircraft will not automatically avoid surrounding obstacles during flight. Please pay attention to the surrounding environment when using it, and manually control the aircraft to avoid obstacles.
- When switching to Ludicrous mode, its flight speed is greatly improved compared with Standard mode, so the braking distance in this mode will be correspondingly extended. You

should maintain a braking distance of at least 40 meters when operating the aircraft in this mode to ensure personal and flight safety.

3.8.3 Intelligent flight function

■ Accurate Landing

The accurate landing function uses the downward binocular Visual Perception System of the aircraft to record the information at its take-off point. When the aircraft is returning to the home point or landing, vision algorithms are used to calculate the distance between the aircraft and the take-off point in real time so as to make sure that the aircraft successfully lands at the take-off point.

■ Landing Protection

The landing protection function uses the downward Visual Perception System of the aircraft to create a depth image, and then calculates the flatness and angle of the depth image to detect whether the surface is flat enough for a safe landing.

■ Intelligent Obstacle Avoidance

The intelligent obstacle avoidance function uses the combined observation results of the visual sensing system and the forward millimeter-wave radar sensing system of the aircraft to calculate the optimal flight path, achieving obstacle avoidance in multiple directions.

3.9 Installing the microSD Card

The aircraft is equipped with a 32GB microSD card slot for storage expansion (the card has been installed into the slot before the aircraft leaves the factory). If users need to replace it with a larger capacity microSD card, please follow the steps below.

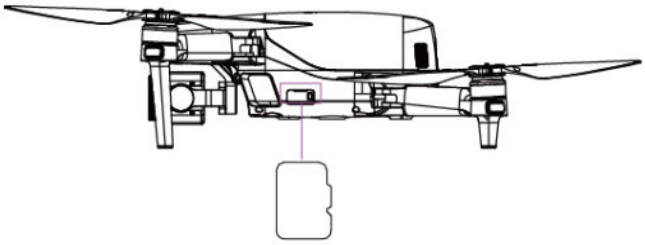

Fig 3-12 install a microSD Card

Tips

- The aircraft has built-in 6 GB storage space, when the microSD card is not inserted, you can still take a single photo or record a video, and the images will be directly stored in the on-board flash memory.
- It is recommended that you prioritize using an external microSD card for storing the image data collected during flight to avoid running out of internal storage space, which will affect the flight safety of the aircraft.
- If you plan to shoot high-definition videos, we recommend using a Class 10, UHS-3, or higher microSD card, and the aircraft supports a microSD card with storage of up to 256GB.

⚠ Warning

- To prevent data loss, please turn off the aircraft before removing the microSD card.
- After installing the microSD card, close the rubber protective cover over the interface area promptly to avoid affecting the protective performance of the product.
- To ensure the stability of the gimbal camera system, please limit the duration of a single recording to within 30 minutes.

3.10 Noise

When the EVO Lite Enterprise Series aircraft hovers, it generates noise with an intensity of 69dB (at a distance of 0.5 meters from the aircraft). Users should familiarize themselves with local noise pollution prevention and control regulations and set a reasonable flight altitude or safety distance to ensure no interference with other individuals, groups, or organizations.

■ A-weighted sound power level

The EVO Lite Enterprise Series aircraft has undergone sound power testing by relevant qualified third-party testing agencies, and the results comply with the regulations of the European Union regarding unmanned aerial vehicles.

Fig 3-13 A-Weighted Sound Power Level of EVO Lite Enterprise Series Aircraft

■ A-weighted sound pressure level

Measurement results for the EVO Lite Enterprise Series aircraft, in accordance with the requirements of GB 42590-2023 in China's Mainland, are provided below:

Table 3-14 Noise Measurements Results (Normalized to 1 m from the Aircraft)

Observation Points	Hover	Fly (1 m/s)
Ground Measure Point (Below)	66.5dB	70.6dB
Side Measure Point (Horizontal Plane)	65.8dB	64.6dB
Note: The measurement environment is an outdoor cement ground.		

Tips

- Before conducting a flight, please make sure to verify the noise restrictions in the flight area in advance to avoid violations of local regulations regarding aircraft noise.

3.11 Autel SkyLink Image Transmission Function

The EVO Lite Enterprise Series Aircraft is equipped with Autel SkyLink transmission technology, equipped with triple-frequency dual-transmit dual-receive capability, so that the communication distance between the aircraft and the RC can reach up to 10km.

- The system supports adaptive frequency hopping transmission across multiple frequency bands, selecting the optimal channel based on electromagnetic interference conditions and providing robust anti-interference capabilities.
- Real-time transmission quality reaches 1080p@30FPS, with a high transmission bitrate of 64Mbps and low-latency transmission characteristics.
- Data link transmission adopts AES-128 encryption method and data storage AES-256 encryption method, ensuring end-to-end data security.

Remarks

- The transmission data is based on the RC and comes from test data, and the test environment and conditions are different, and the data may be different.
- The transmission range is provided for reference only, and during actual use, it is important to monitor the quality of the video transmission signal continuously. In the case of poor video transmission signals, it is recommended to promptly reduce the flight radius. For more information, please refer to "6.3 Status Notification Bar" in Chapter 6.

■ Information of Communication Frequency Bands for Aircraft

The communication frequency bands of the EVO Lite Enterprise Series aircraft comply with regulatory requirements worldwide. Please feel assured in using it. The relevant certified frequency bands are listed in the table below.

During actual use, after powering on and pairing the aircraft with the RC, the Autel Enterprise on the RC will automatically determine the location of different countries and regions based on the GNSS information received by the aircraft. It will then automatically select the frequency band that complies with local regulations for wireless communication.

Tips

- After pairing the aircraft with the RC, the wireless communication frequency band between them will be automatically controlled by the Autel Enterprise based on the geographical information of the aircraft to ensure compliance with local regulations.
- Before flying, ensure that the aircraft, after powering on, can receive a good GNSS signal so that the Autel Enterprise can select the correct communication frequency band.

- In scenarios where the aircraft flies in visual positioning mode (such as in the absence of GNSS signals), the wireless communication frequency band between the aircraft and the RC will be the one used in the previous flight by default. In such cases, it is recommended that users power on and position the aircraft in an area with a good GNSS signal before proceeding to the actual operational area for the flight.

Table 3-15 Global Certified Frequency Bands for EVO Lite Enterprise Series aircraft (Image Transmission)

Operating Frequency	Details	Bandwidth	Certified Countries & Regions
2.4G	2400 – 2476MHz	■ BW=1.4MHz ■ BW=10MHz ■ BW=20MHz	■ China's Mainland
2.4G	2400 – 2483.5MHz	■ BW=1.4MHz ■ BW=10MHz ■ BW=20MHz	■ Taiwan, China ■ U.S ■ Canada ■ EU ■ UK ■ Australia ■ South Korea ■ Japan
5.1G	5150 - 5250MHz	■ BW=1.4MHz ■ BW=10MHz ■ BW=20MHz	■ U.S
5.7G	5650 - 5755MHz	■ BW=1.4MHz ■ BW=10MHz ■ BW=20MHz	■ Japan
5.8G	5725-5829MHz	■ BW=1.4MHz ■ BW=10MHz ■ BW=20MHz	■ China's Mainland
5.8G	5725 - 5850MHz	■ BW=1.4MHz ■ BW=10MHz ■ BW=20MHz	■ Taiwan, China ■ U.S ■ Canada ■ EU ■ UK ■ Australia ■ South Korea

Remarks

- Some countries and regions have strict restrictions on the use of radio communication frequency bands. It is crucial to use them legally, and any modification of communication modules is strictly prohibited.
- If flying in any countries not listed in the above table, please consult the local communication management authorities to ensure that the aircraft communication frequency bands comply with local regulatory requirements.
- UAS will automatically match the legal frequency band based on GNSS positioning, so users can use it with confidence.

Table 3-16 Global Certified Frequency Bands for EVO Lite Enterprise Series Aircraft (Wi-Fi)

Operating Frequency	Details	Certified Countries & Regions
2.4G （2400 – 2476MHz）	802.11b/g/n	■ Japan
5.1G （5150 – 5250 MHz）	802.12ac	■ U.S
5.8G （5725 – 5829 MHz）	802.11ac	■ China's Mainland
5.8G （5725 – 5850 MHz）	802.11ac	■ Taiwan, China ■ U.S ■ Canada ■ EU ■ UK ■ Australia ■ Korea

Remarks

- The EVO Lite Enterprise Series Aircraft supports Wi-Fi fast transfer, and photos and videos on the aircraft can be downloaded to the RC at a transfer speed of up to 20MB/s through the Autel Enterprise.
- During flight, the Wi-Fi fast transfer function of the aircraft will not be enabled, and this function will only be supported after the aircraft lands.
- UAS will automatically match the legal frequency band based on GNSS positioning, so users can use it with confidence. Under different frequency bands, the Wi-Fi fast transfer rate will be different.

■ RC Devices

The aircraft supports frequency pairing with the RC, enabling remote communication control of the aircraft.

Table 3-17 Supported List of Aircraft Ground Control Equipment

Control Device Information	RC
Manufacturer	Autel Robotics
Control Software	Autel Enterprise
Software Version Requirement	V1.4.64 or higher
Supplementary Information	Standard configuration

Tips

- The Autel Smart Controller SE V2 is included as a standard item in the aircraft package, and Users do not have to buy it separately.
- Ensure that the control software version meets the above requirements when remotely controlling the aircraft with the mentioned devices.

Chapter 4 Remote Controller

4.1 Introduction

The Autel Smart Controller SE V2 is installed with the Autel Enterprise Application by default, allowing you to operate and set the aircraft and the gimbal camera and transmit high-definition videos from the gimbal camera in real time. It offers a maximum communication distance of 15 kilometers.

PMN: Autel Smart Controller SE V2 HVIN:EF6-2

Remarks

- The maximum communication distance of the Autel Smart Controller SE V2 is measured under unblocked and interference-free conditions and is for references only.
- It supports adaptive frequency hopping transmission, selects the optimal channel according to the electromagnetic interference situation, and has strong anti-interference ability.
- The whole link data transmission between the aircraft and the remote controller adopts the AES-128 encryption method and the data storage adopts the AES-256 encryption method to ensure end-to-end data communication security.
- Before first use, please activate the RC's battery by charging.

4.1.1 Remote Controller Components

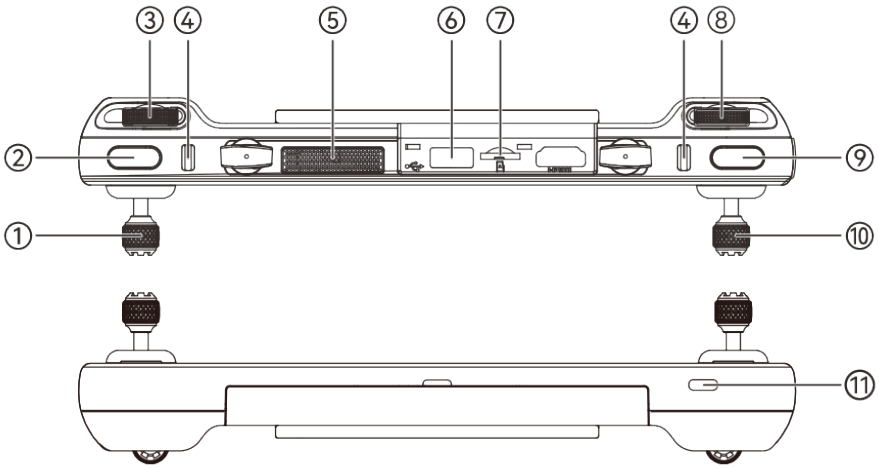

Fig 4-1 Remote Controller Top-Down View

Table 4-1 Remote Controller Top-Down View Details

No.	Name	Description
1	Left Command Stick	Controls the state of motion of the aircraft. The default stick mode is Mode 2. In this mode, you can use the stick to control

		the ascent, descent, and heading of the aircraft. You can set the stick mode in the Autel Enterprise App. For more information, please refer to "6.5.3 RC Settings" in Chapter 6.
2	C Button	Use the Autel Enterprise Application to customize the key function. For more information, please refer to "6.5.3 RC Settings" in Chapter 6.
3	Left Dial Wheel	Turn the dial wheel to adjust the gimbal pitch.
4	Hook	Used to connect and fix the remote controller lanyard.
5	Air Outlet	For heat dissipation of the remote controller. When using it, please pay attention to whether there are foreign objects blocking the air outlet.
6	USB-A Interface	Connects to an expandable 4G/5G module or external USB device for data transmission.
7	Micro SD card slot	Used for storage expansion.
8	Right Dial Wheel	Turn the dial wheel to adjust the zoom factor of the camera.
9	Shotting/Video Recording Button	After setting of the camera mode, Press to take photos or record videos.
10	Right Stick	Controls the state of motion of the aircraft. The default stick mode is Mode 2. In this mode, you can use the stick to control the translation of the aircraft in four directions: front/back/left/right. You can set the stick mode in the Autel Enterprise App. For more information, please refer to "6.5.3 RC Settings" in Chapter 6.
11	USB-C Interface	Used for remote controller charging or device debugging.

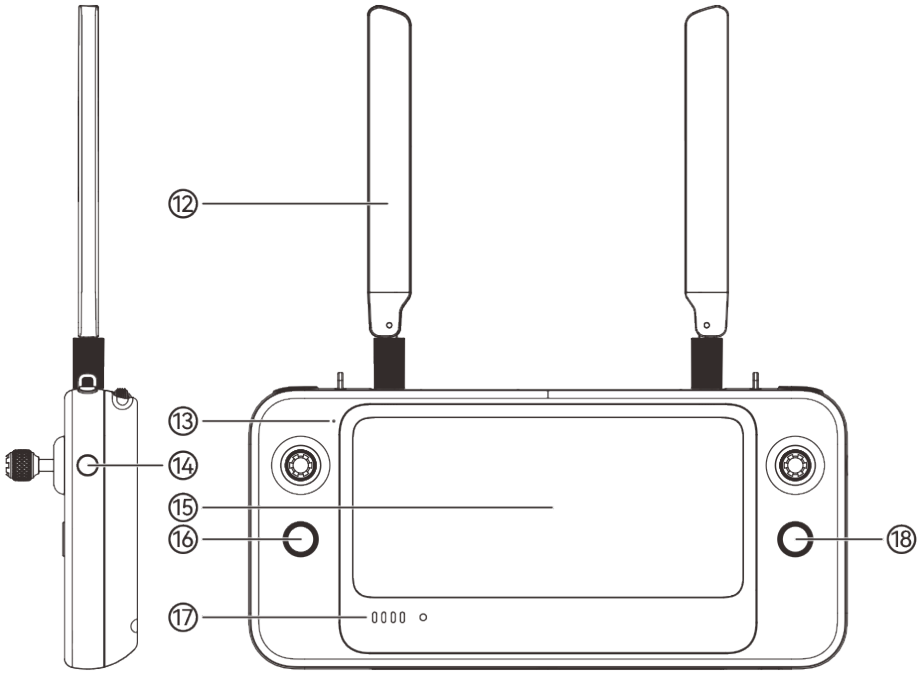

Fig 4-2 Remote Controller Front View

Table 4-2 Remote Controller Front View Details

No.	Name	Description
12	Antenna	Transmits the control signals of the remote controller and receives the image transmission information of the aircraft.
13	Audio Input	Receives information from an external audio source near the remote controller.
14	Power button	Long press for 2s to turn on/off the remote controller. When the remote controller is on, quickly press the power button to switch between Screen On and Screen Off.
15	Display	Displays real-time image transmission views. with 1440 x 720 resolution. Touch operation is supported.
16	Take-off/Return-to-Home Button	When the aircraft is turned on but not taking off, press and hold the button for 2 seconds, and the aircraft will take off and hover at an altitude of 1.2 meters above the ground. When the aircraft is flying, press and hold the button for 2 seconds, and the aircraft will automatically begin the return-to-home process.
17	Battery Level Indicator	Displays the remaining battery level of the remote controller.
18	Pause Button	When the aircraft is in autonomous flight mode, short press this button to control the aircraft to suspend autonomous flight and hover in place or resume autonomous flight; press

		and hold this button for 2 seconds to exit the autonomous flight.

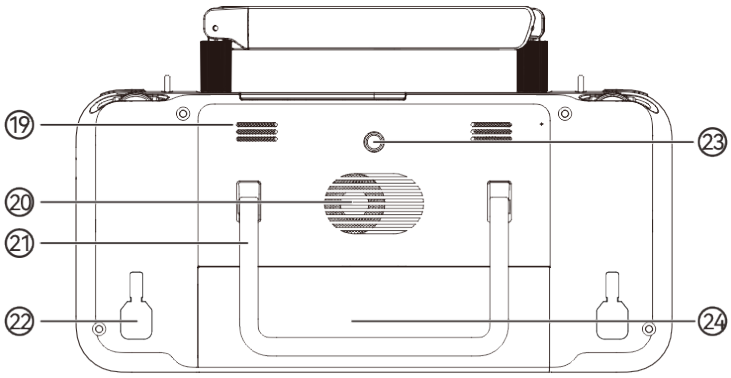

Fig 4-3 Remote Controller Rear View

Table 4-3 Remote Controller Rear View Details

No.	Name	Description
19	Speaker	Plays sound to indicate the status of the aircraft.
20	Air Inlet	Used for heat dissipation of the remote controller. Please pay attention to whether there are foreign objects blocking the air inlet when using it.
21	Foldable Handle	When unfold the handle, the remote controller can stand on the table with the support of the handle.
22	Command Stick Storage Slot	Used to store left and right sticks in the slots for transportation.
23	Standard 1/4 interface	Used for attaching tripods.
24	Removable Battery	Autel Smart Controller SE V2 adopts removable battery design, when the controller is powered off, push the battery outward to take it off.

4.1.2 Communication Frequency Bands

The image transmission frequency bands of Autel Smart Controller SE V2 comply with regulatory requirements worldwide. Please refer to the table below for the relevant certified frequency bands.

Tips

- After the aircraft is paired with the remote controller, the frequency bands between them will be automatically controlled by the Autel Enterprise Application based on the geographical information of the aircraft. This is to ensure compliance with local regulations regarding frequency bands.
- Before flight, please ensure that the aircraft receives a strong GNSS signal after powering on. This allows the Autel Enterprise Application to receive the proper communication frequency band.
- When users adopt visual positioning mode (such as in scenarios without GNSS signals), the wireless communication frequency band between the aircraft and remote controller will default to the band used in the previous flight. In this case, it is advisable to power on the aircraft in an area with a strong GNSS signal, then start flight in the actual operational area.

Table 4-4 Global Certified Frequency Bands (Image Transmission)

Operating Frequency	Details	Bandwidth	Certified Countries & Regions
900M	902 - 928MHz	BW=1.4MHz BW=10MHz BW=20MHz	■ U.S ■ Canada
2.4G	2400 – 2476MHz	BW=1.4MHz BW=10MHz BW=20MHz	■ China's Mainland
2.4G	2400 – 2483.5MHz	BW=1.4MHz BW=10MHz BW=20MHz	■ Taiwan, China ■ U.S ■ Canada ■ EU ■ UK ■ Australia ■ South Korea ■ Japan
5.7G	5650 - 5755MHz	BW=1.4MHz BW=10MHz BW=20MHz	■ Japan
5.8G	5725 - 5829MHz	BW=1.4MHz BW=10MHz BW=20MHz	■ China's Mainland
5.8G	5725 - 5850MHz	BW=1.4MHz BW=10MHz BW=20MHz	■ Taiwan, China ■ U.S ■ Canada ■ EU ■ UK

		■ Australia ■ South Korea

Table 4-5 Global Certified Frequency Bands (Wi-Fi)

Operating Frequency	Details	Certified Countries & Regions
2.4G （2400 – 2476 MHz）	802.11b/g/n	■ China's Mainland
2.4G （2400 – 2483.5 MHz）	802.11b/g/n	■ Taiwan, China ■ U.S ■ Canada ■ EU ■ UK ■ Australia ■ South Korea ■ Japan
5.8G （5725 – 5829MHz）	802.11a/n/ac	■ China's Mainland
5.8G （5725 – 5850 MHz）	802.11a/n/ac	■ Taiwan, China ■ United States ■ Canada ■ EU ■ UKi ■ Australia ■ South Korea

4.2 Installing the Remote Controller Lanyard

Tips

- The remote controller lanyard is not included in the aircraft kit. Users may need to purchase on their own. If you need one, please contact Autel Robotics.
- The remote controller lanyard is an optional accessory. You can choose whether to install it as required.
- When holding the remote controller for a long time during flight operations, we recommend that you install the remote controller lanyard to effectively reduce the pressure on your hands.

■ Steps

1. Clip the two metal clips on the lanyard to the hook at the controller.
2. Wear the lanyard around your neck, and adjust it to a suitable length.

4.3 Installing/Storing Command Sticks

The Autel Smart Controller SE V2 features removable command sticks, which effectively reduce storage space and enable easy carrying and transportation.

■ Installing command sticks

Take out the command sticks from the command stick storage slots. Then rotate them clockwise to install them separately on the remote controller.

■ Storing Command sticks

Rotate counterclockwise to remove the two command sticks and then store them in the command stick storage slots as shown below.

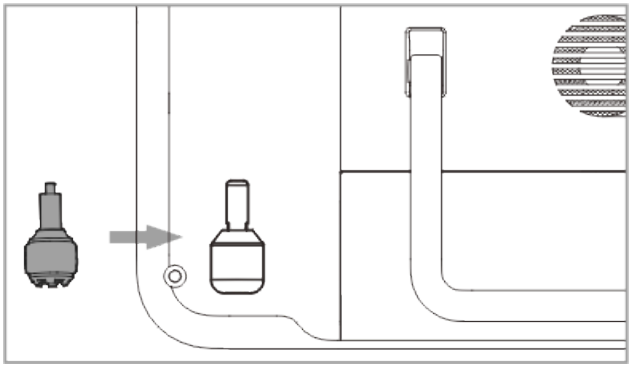

Fig 4-4 Storing command sticks

Tips

- When the command sticks are not in use (such as during transportation and temporary aircraft standby), we recommend that you remove and store them in the storage slots. This can prevent you from accidentally touching the command sticks, causing damage to the sticks or unintended startup of the aircraft.
- When storing the sticks, please make sure that they are fully stored in the slots.

4.4 Turning the Remote Controller On/Off

■ Turning the Remote Controller On

Press and hold the power button at the right side of the remote controller for 2 seconds until the controller emits a "beep" sound to turn it on.

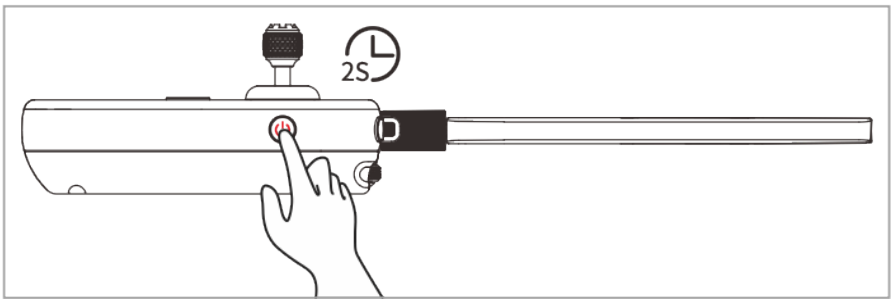

Fig 4-5 Turning the Remote Controller On

Tips
● When using a brand-new remote controller for the first time, please follow the on-screen instructions to complete the relevant setup.

■ Turning the Remote Controller Off

When the remote controller is on, press and hold the power button at the right side of the remote controller until the "Power off", ”Airplane mode”, and "Restart" icons appear at the top of the controller's screen. Tapping the "Power off" icon will turn off the remote controller. Tapping the "Restart" icon will restart the remote controller.

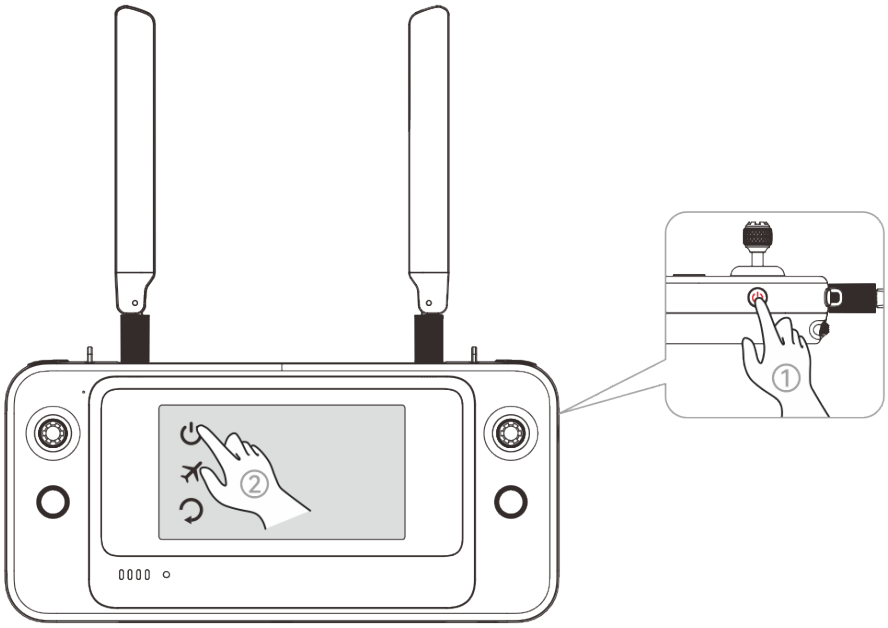

Fig 4-6 Turning the Remote Controller Off

Tips
● When the remote controller is on, you can press and hold the power button at the right of the remote controller for 6 seconds to forcibly turn it off.

4.5 Checking the Battery Level of the Remote Controller

When the remote controller is off, short press the power button of the remote controller for 1 second, and the battery level indicator will display the battery level of the remote controller.

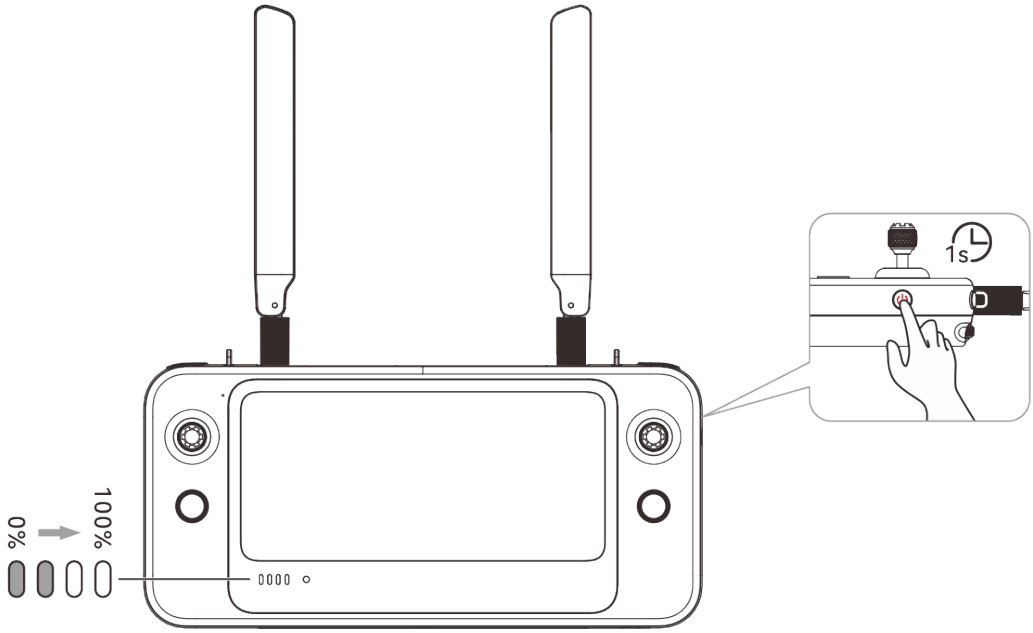

Fig 4-7 Checking the Battery Level of the Remote Controller

Table 4-6 Battery Remaining

Power Display	Definition	Power Display	Definition
● ○ ○ ○	1 light always on: 0%-25% power	● ● ○ ○	2 lights always on: 26%-50% power
● ● ● ○	3 lights always on: 51%-75% power	● ● ● ●	4 lights always on: 76%-100% power

Tips

When the remote controller is on, you can check the current battery level of the RC in the following ways:

- Check it on the top status bar of the Autel Enterprise App.
- Check it on the shortcut toolbar on the RC.
- Go to the system settings of the RC and check the current battery level of the controller in “Battery”.

4.6 Charging the Remote Controller

Connect the USB-A output end of the official RC charger to the USB-C interface of the remote controller by using a USB-A to USB-C cable and connect the plug of the charger to an AC power supply (100-240 V~ 50/60 Hz).

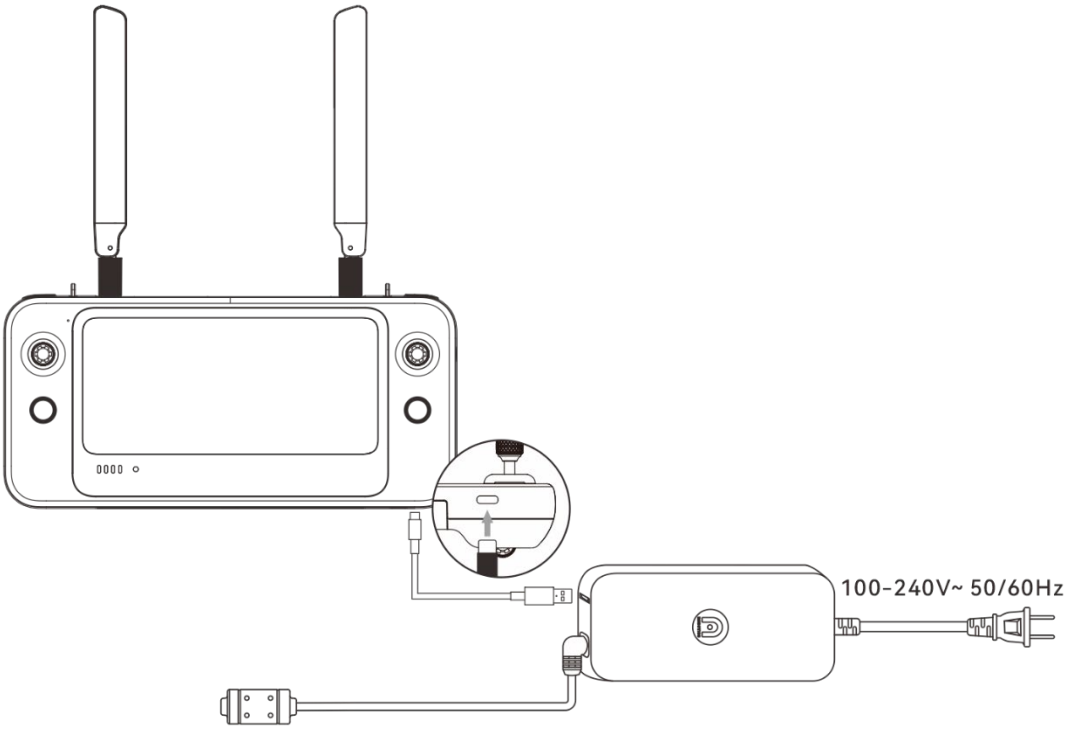

Fig 4-8 Use the RC charger to charge the remote controller

⚠ Warning

- Please use the official charger provided by Autel Robotics to charge the remote controller. Using third-party chargers may damage the battery of the remote controller.
- After charging is complete, please disconnect the remote controller from the charging device promptly.

Remarks

- It is recommended to fully charge the remote controller battery before the aircraft takes off.
- Generally, it takes about 90 minutes to fully charge the aircraft battery, but the charging time is related to the remaining battery level.

4.7 Adjusting the Antenna Position of the Remote Controller

During flight, please extend the antenna of the remote controller and adjust it to an appropriate position. The strength of the signal received by the antenna varies depending on its position.

When the angle between the antenna and the back of the remote controller is 180° or 270°, and the plane of the antenna faces the aircraft, the signal quality between the remote controller and the aircraft can reach its best state.

Important

- When you operate the aircraft, make sure that the aircraft is in the place for the best communications.
- Do not use other communication devices of the same frequency band at the same time to prevent interference with the signals of the remote controller.
- During flight, if there is a poor image transmission signal between the aircraft and the remote controller, the remote controller will provide a prompt. Please adjust the antenna orientation according to the prompt to ensure that the aircraft is in the optimal data transmission range.
- Please ensure the RC antenna is securely tightened. If the antenna is not securely tightened, please rotate the antenna connector clockwise until it is secured.

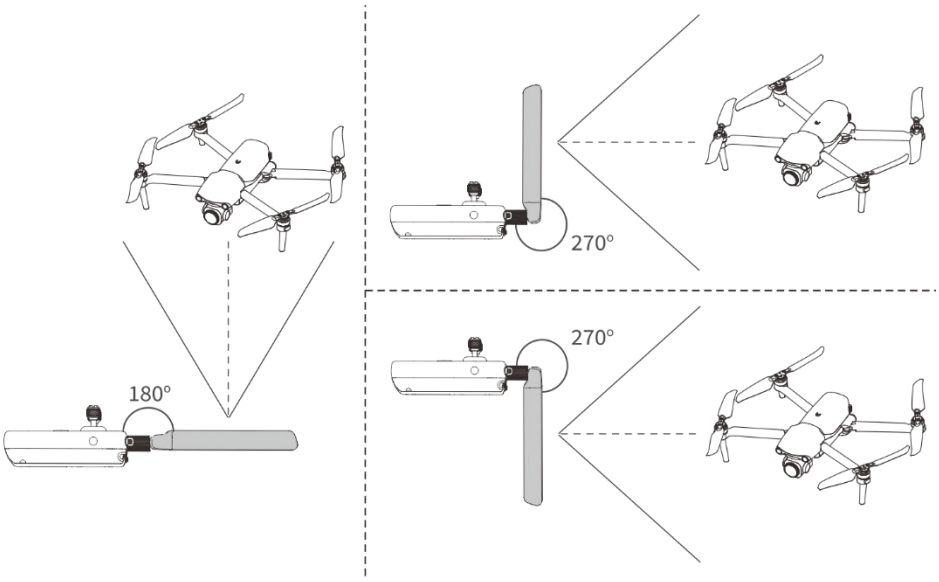

Fig 4-9 Extend the antenna

4.8 Remote Controller System Interfaces

4.8.1 Remote Controller Main Interface

After the remote controller is turned on, it enters the main interface of the Autel Enterprise Application by default.

In the main interface of the Autel Enterprise App, slide down from the top of the touch screen or slide up from the bottom of the touch screen to display the system status notification bar and navigation keys, and tap the "Home" button to enter the "Remote Controller Main Interface". Swipe left and right on the "Remote Controller Main Interface" to switch between different screens, and enter other applications as needed.

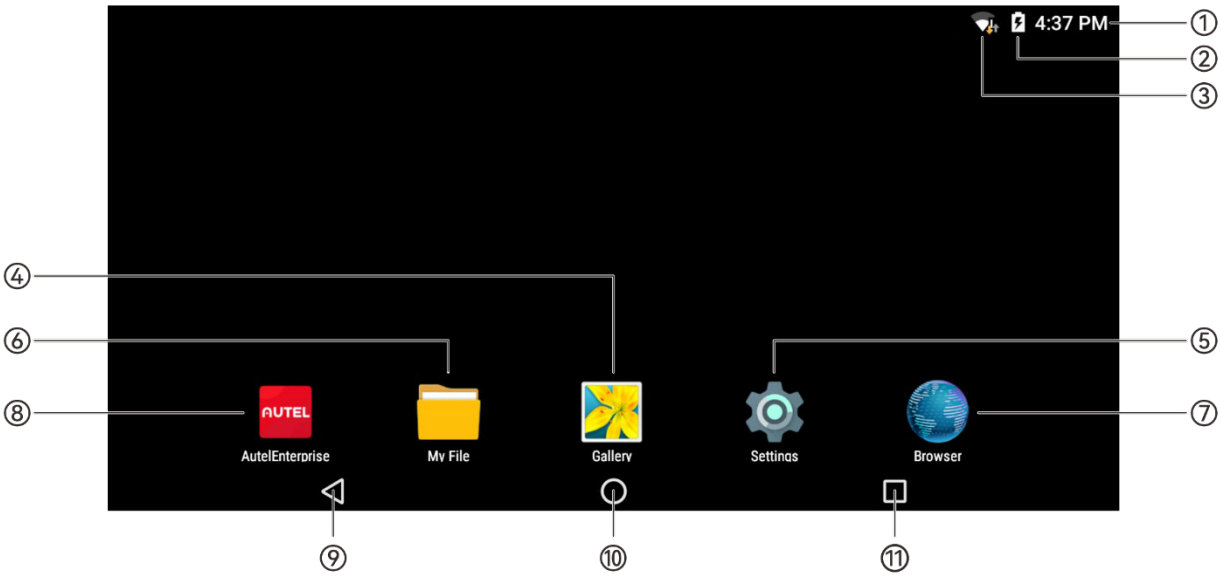

Fig 4-10 Remote Controller Main Interface

Table 4-7 Remote Controller Main Interface Details

No.	Name	Description
1	Time	Indicates the current system time.
2	Battery Status	Indicates the current battery status of the remote controller.
3	Wi-Fi Status	Indicates that Wi-Fi is currently connected. If not connected, the icon is not displayed. You can quickly turn on or off the connection to Wi-Fi by sliding down from anywhere on the "Remote Controller Interface" to enter the "Shortcut Menu".
4	Gallery	The app is installed in the system by default. Tap it to view the images saved by the current system.
5	Settings	The system settings app of the remote controller. Tap it to enter the settings function, and you can set system functions of the remote controller.
6	My File	The app is installed in the system by default. Tap it to manage the files saved in the current system.
8	Browser	The app is installed in the system by default. When the remote controller is connected to the Internet, you can use it to browse web pages and access Internet resources.
9	Autel Enterprise	Flight software. The Autel Enterprise Application starts by default when the remote controller is turned on.
10	“Back” Button	Tap the button to return to the previous page.

11	“Home” Button	Tap the button to jump to the "Remote Controller Main Interface".
12	“Recent apps” Button	Tap the button to view all background programs currently running. Press and hold the application to be closed and slide it left or right to close the application.

Tips

- The remote controller supports the installation of third-party Android apps, but you need to obtain the installation packages on your own.
- The remote controller has a screen aspect ratio of 2: 1, and some third-party app interfaces may encounter compatibility issues.

Table 4-8 List of Pre-installed Apps on the Remote Controller

No.	Pre-installed App	Device Compatibility	Software Version	Operating System Version
1	My File	√	0.1.5	Android 6.0.1
2	Gallery	√	1.1.40030	Android 6.0.1
3	Autel Enterprise	√	V1.4.66	Android 6.0.1
4	Browser	√	6.0.1	Android 6.0.1
5	Settings	√	6.0.1	Android 6.0.1
6	Google Pinyin Input	√	4.2.1.111290097-armeabi-v7a	Android 6.0.1
7	Android Keyboard (AOSP)	√	6.0.1	Android 6.0.1
8	Laucher3	√	6.0.1	Android 6.0.1
9	MX Player	√	1.80.0	Android 6.0.1
10	Camera	√	201408221045	Android 6.0.1

Tips

- Please be aware that the factory version of the Autel Enterprise Application may vary depending on subsequent function upgrades.

4.8.2 Shortcut Menu

Slide down from anywhere on the "Remote Controller Interface", or slide down from the top of the screen in any app to display the “Shortcut Menu”.
In the "Shortcut Menu", you can quickly set WLAN, Bluetooth, airplane mode, cast and screen brightness.

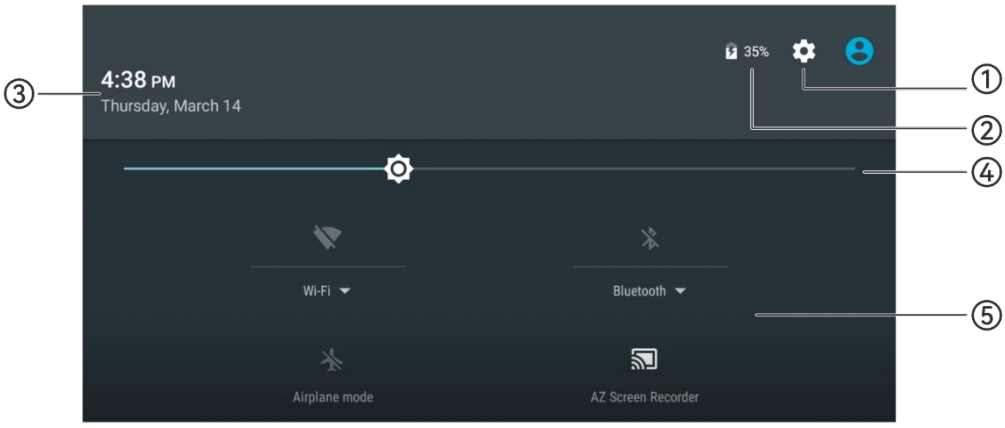

Fig 4-11 Shortcut Menu

Table 4-9 Shortcut Menu Details

No.	Name	Description
1	Setting	Tap to enter the system setting.
2	Battery Status	View the battery status of the current aircraft.
3	Time and Date	View the current system time and date.
4	Screen Brightness Adjustment	Drag the slider to adjust the screen brightness.
5	Wi-Fi	Tap the icon to enable or disable the Wi-Fi function. Tap the pull-down button to enter the Wi-Fi setting interface and select the wireless network to be connected.
	Bluetooth	Tap the icon to enable or disable the Bluetooth function. Tap the pull-down button to enter the Bluetooth setting interface and select the Bluetooth to be connected.
	Airplane Mode	Tap the icon to turn on or off the airplane mode, that is, to turn on or turn off the Wi-Fi and Bluetooth functions at the same time.
	Cast	When connecting Wi-Fi, tap the icon to enter the cast interface where you can project the image of the remote controller to other display devices which are using the same network.

4.9 Frequency Pairing With the Remote Controller

4.9.1 Using the Autel Enterprise App

Only after the remote controller and the aircraft are paired can you operate the aircraft using the remote controller.

Table 4-10 Frequency Pairing Process in the Autel Enterprise App

Step	Operation	Diagram
1	Turn on the remote controller and the aircraft. After entering the main interface of the Autel Enterprise App, tap “⊞” at the upper-right corner, tap “⚙”, select “🤖” and then tap "Connect to aircraft".	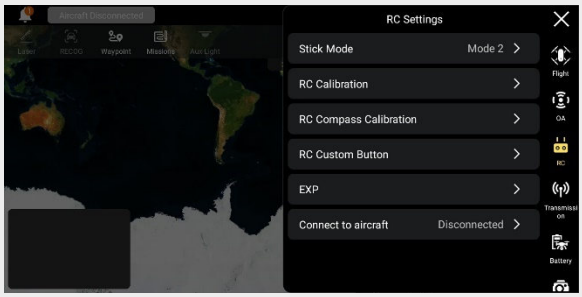
2	After a prompt is displayed, double-click the aircraft power button to complete the pairing with the remote controller.	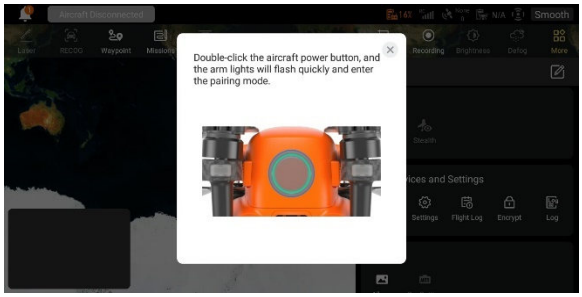

Remarks

- The aircraft included in the aircraft kit is paired with the remote controller provided in the kit at the factory. No pairing is required after the aircraft is powered on. Normally, after completing the aircraft registration and activation process, you can directly use the remote controller to operate the aircraft.
- When the remote controller is in pairing state, the power indicator will also flash quickly at the same time.
- If the aircraft and the remote controller become unpaired due to other reasons, please follow the above steps to pair the aircraft with the remote controller again.

Important

- When pairing, please keep the remote controller and the aircraft close together, at most 50 cm apart.

4.9.2 Using Combination Buttons (For Forced Frequency Pairing)

If the remote controller is turned off, you can perform forced frequency pairing. The process is as follows:

1. Press and hold the power button and the take-off/return-to-home button of the remote controller at the same time until the battery level indicator of the remote controller flashes quickly, which indicates that the remote controller has entered the forced frequency pairing state.
2. Make sure that the aircraft is turned on. Double click the power button of the aircraft and the front and rear arm green lights of the aircraft will flash quickly.
3. When the front and rear arm lights of the aircraft and the battery level indicator of the remote controller stop flashing, it indicates that the frequency pairing is successfully done.

4.10 Selecting Stick Mode

4.10.1 Stick Modes

When using the remote controller to operate the aircraft, you need to know the current stick mode of the remote controller and fly with caution.
Three stick modes are available, that is, Mode 1, Mode 2 (default), and Mode 3.

■ Mode 1

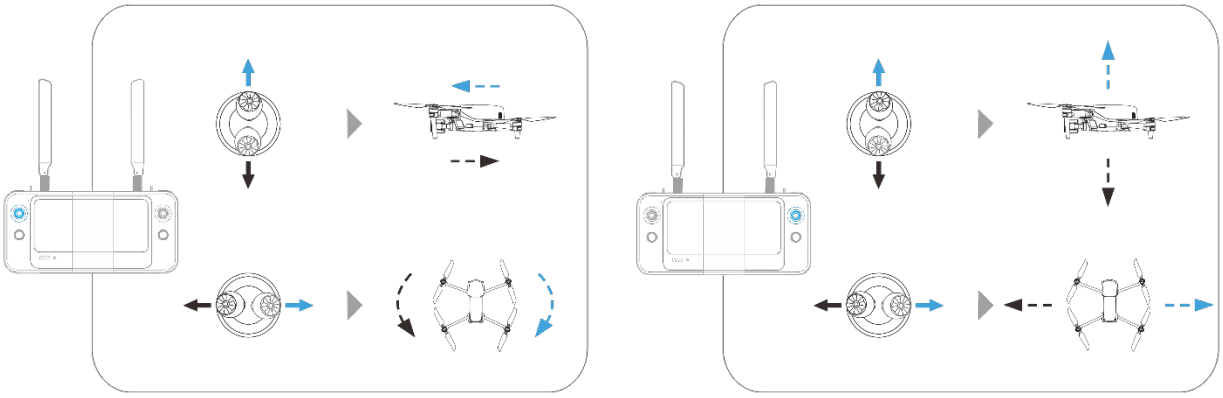

Fig 4-12 Mode 1

Table 4-11 Mode 1 Details

Stick	Move Up/Down	Move Left/Right
Left Command Stick	Controls the forward and backward movement of the aircraft	Controls the heading of the aircraft
Right Command Stick	Controls the ascent and descent of the aircraft	Controls the left or right movement of the aircraft

■ Mode 2

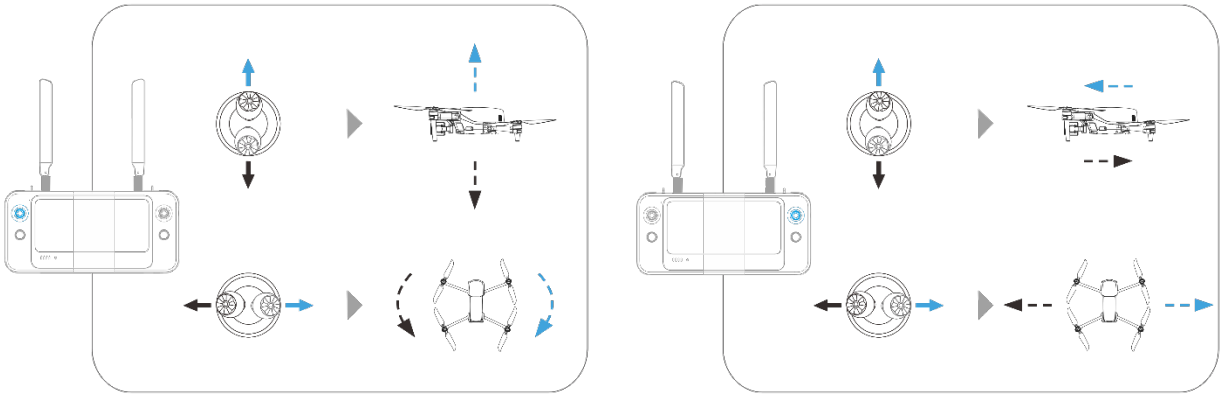

Fig 4-13 Mode 2

Table 4-12 Mode 2 Details

Stick	Move Up/Down	Move Left/Right
Left Command Stick	Controls the ascent and descent of the aircraft	Controls the heading of the aircraft
Right Command Stick	Controls the forward and backward movement of the aircraft	Controls the left or right movement of the aircraft

■ Mode 3

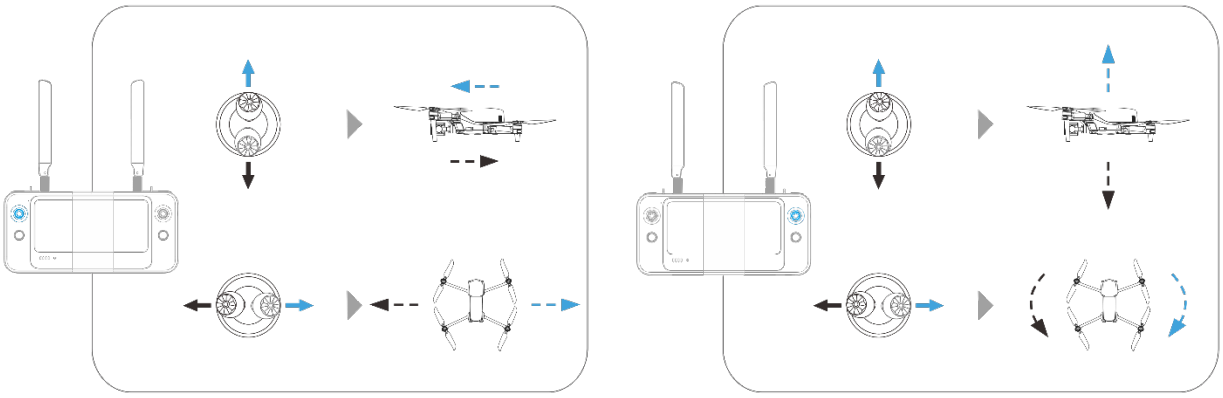

Fig 4-14 Mode 3

Table 4-13 Mode 3 Details

Stick	Move Up/Down	Move Left/Right
Left Command Stick	Controls the forward and backward movement of the aircraft	Controls the left or right movement of the aircraft

Right Command Stick	Controls the ascent and descent of the aircraft	Controls the heading of the aircraft

⚠ Warning

- Do not hand over the remote controller to persons who have not learned how to use the remote controller.
- If you are operating the aircraft for the first time, please keep the force gentle when moving the command sticks until you are familiar with the operation.
- The flight speed of the aircraft is proportional to the degree of the command stick movement. When there are people or obstacles near the aircraft, please do not move the stick excessively.

4.10.2 Setting Stick Mode

You can set the stick mode according to your preference. For detailed setting instructions, please refer to "6.4 Settings Interface" in Chapter 6. The default stick mode of the remote controller is "Mode 2".

Table 4-14 Default Control Mode (Mode 2)

Mode 2	Aircraft Flight Status	Control Method
Left Command Stick Move Up or Down 	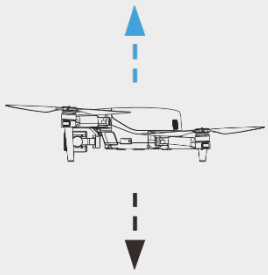	The up-and-down direction of the left stick is the throttle stick, which is used to control the vertical lift of the aircraft. Push the stick up, and the aircraft will rise vertically; pull the stick down, and the aircraft will descend vertically. When the stick is returned to the center, the altitude of the aircraft remains unchanged. When the aircraft takes off, please push the stick up to above the center, and the aircraft can lift off the ground.
Left Command Stick Move Left or Right 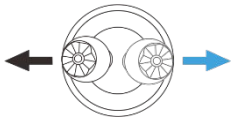	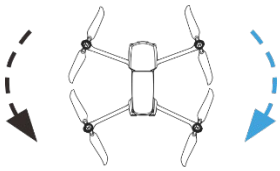	The left-and-right direction of the left stick is the yaw stick, which is used to control the heading of the aircraft. Push the stick to the left, and the aircraft will rotate counterclockwise; push the stick to the right, and the aircraft will rotate clockwise. When the stick is returned to the center, the rotational angular velocity of the aircraft is zero, and the aircraft does not rotate at this time.

		The larger the degree of the stick movement, the greater the rotational angular velocity of the aircraft.
Right Command Stick Move Up or Down		The up-and-down direction of the right stick is the pitch stick, which is used to control the flight of the aircraft in the forward and backward directions. Push the stick up, and the aircraft will tilt forward and fly towards the front of the nose; pull the stick down, and the aircraft will tilt backward and fly towards the tail of the aircraft. When the stick is returned to the center, the aircraft remains horizontal in the forward and backward directions. The larger the degree of the stick movement, the faster the flight speed of the aircraft, and the larger the tilt angle of the aircraft.
Right Command Stick Move Left or Right		The left-and-right direction of the right stick is the roll stick, which is used to control the flight of the aircraft in the left and right directions. Push the stick to the left, and the aircraft will tilt to the left and fly to the left of the nose; pull the stick to the right, and the aircraft will tilt to the right and fly to the right of the nose. When the stick is returned to the center, the aircraft remains horizontal in the left and -right directions. The larger the degree of the stick movement, the faster the flight speed of the aircraft, and the larger the tilt angle of the aircraft.

Remarks

- When controlling the aircraft for landing, pull the throttle stick down to its lowest position. In this case, the aircraft will descend to an altitude of 1.2 meter above the ground, and then it will perform an assisted landing and automatically descend slowly.

4.10.3 Starting/Stopping the Aircraft Motor

Table 4-15 Start/Stop the Aircraft Motor

Process	Stick Operation	Description
Start the aircraft motor when the aircraft is powered on	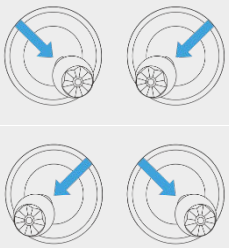	Power on the aircraft, and the aircraft will automatically perform a self-check. Then simultaneously move the left and right sticks inward or outward for 2 seconds, as shown in the figure, to start the aircraft motor.
Stop the aircraft motor when the aircraft is landing	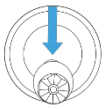	When the aircraft is in landing state, pull the throttle stick down to its lowest position, as shown in the figure, and wait for the aircraft to land until the motor stops.
	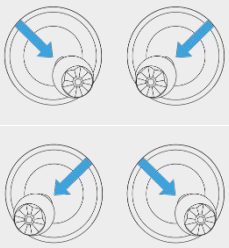	When the aircraft is in landing state, simultaneously move the left and right sticks inward or outward, as shown in the figure, until the motor stops.

⚠ Warning

- When taking off and landing the aircraft, stay away from people, vehicles, and other moving objects.
- The aircraft will initiate a forced landing in case of sensor anomalies or critically low battery levels.

4.11 Remote Controller Buttons

4.11.1 Custom Button C

You can customize the functions of the C custom button according to your preferences. For detailed setting instructions, please refer to "6.4 Settings Interface" in Chapter 6.

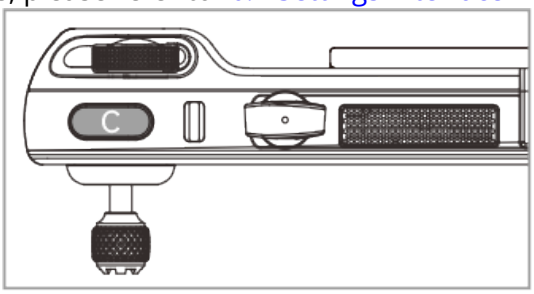

Fig 4-15 Custom Button C

Table 4-16 C Customizable Settings

No.	Function	Description
1	Visual Obstacle Avoidance On/Off	Press to trigger: turn on/off the visual sensing system. When this function is enabled, the aircraft will automatically hover when it detects obstacles in the visual sensing system.
2	Gimbal Pitch Recenter/45°/Down	Press to trigger: Switch the gimbal angle. ➢ Gimbal Pitch Recenter: The heading angle of the gimbal returns from the current position to be consistent with the heading of the aircraft nose, and the gimbal pitch angle returns to a 0° direction from the current angle. ➢ Gimbal Pitch 45°: The heading angle of the gimbal returns from the current position to be consistent with the heading of the aircraft nose, and the gimbal pitch angle rotates to a 45° direction from the current angle. ➢ Gimbal Pitch Down: The heading angle of the gimbal returns from the current position to be consistent with the heading of the aircraft nose, and the gimbal pitch angle rotates to a 90° direction from the current angle.
3	Map/Image Transmission	Press to trigger: Switch between map/image transmission interface.
4	Speed Mode	Press to trigger: Switch speed mode of the aircraft. For details, please refer to "3.8.2 Flight modes" in chapter 3.

⚠ Warning

- When the speed mode of the aircraft is switched to "Ludicrous", the visual obstacle avoidance system will be turned off.

4.11.2 Take-off/Return-to-Home Button and Pause Button

⚠ Warning

- The auto-return function will only be enabled when the GNSS signal is good. If the obstacle avoidance system is disabled during a return flight, the aircraft will not be able to automatically avoid obstacles.
- Before using the auto-return function, you need to set the home point in advance in the Autel Enterprise App. If the home point is not set, the aircraft will take the take-off point as the home point by default.

To manually activate the auto-return function, press and hold the take-off/return-to-home button "" on the remote controller for 2 seconds until the remote controller emits a "beep" sound. Upon receiving the command, the aircraft will automatically return and land at the preset home point.

When the aircraft is in the auto-return state, the remote controller will be disabled. You can short press the pause button "" until the remote controller emits a "beep" sound to pause the auto-return, or long press the pause button "" for 2 seconds until the remote controller emits a "beep" sound to exit the auto-return. After pausing or exiting the auto-return, you can reactivate the remote controller for controlling the aircraft.

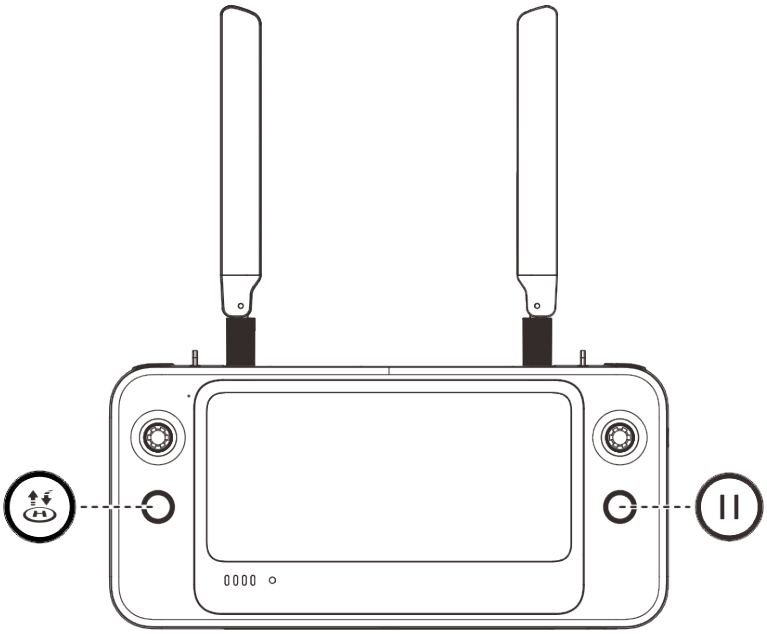

Fig 4-16 Take-off/Return-to-Home Button and Pause Button

Tips

- When the aircraft pauses an auto-return, it will hover in place. To resume the auto-return, press the pause button "" again until the remote controller emits a "beep" sound.

Warning

- If the auto-return home point is not suitable for the aircraft to land (such as uneven ground and crowds), please exit the auto-return before the aircraft reaches the home point, and then manually resume control to land.

4.12 Turning On/Off the Remote Controller Prompt Sound

In some scenarios, the remote controller will send a prompt sound, such as button-triggering sound and voice broadcast.

Tips

- You can access the system settings app from the main interface of the remote controller, and then drag the volume slider in “Sound & Notification” to adjust the media volume and right volume separately.

4.13 Calibrating the Remote Controller Compass

If the Autel Enterprise Application prompts an alert “The RC compass need to be calibrated”, please calibrate it, as shown below.

Table 4-17 Calibrating the RC Compass

Step	Operation	Diagram
1	Turn on the remote controller. After entering the main interface of the Autel Enterprise App, tap “” at the upper-right corner, tap “” and select "", and then tap "RC Compass Calibration". Then enter the RC compass calibration interface.	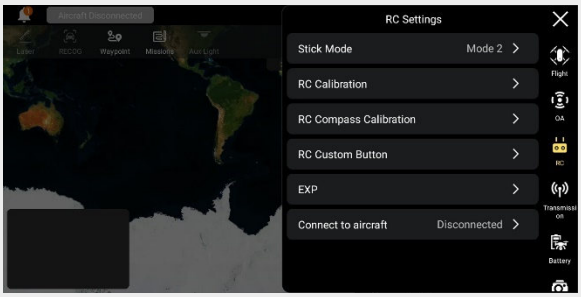
2	Tap “Start calibration” button, hold the controller, perform a figure-of-8 movement as illustrated in the diagram until you sense haptic feedback from the controller, then check the calibration result.	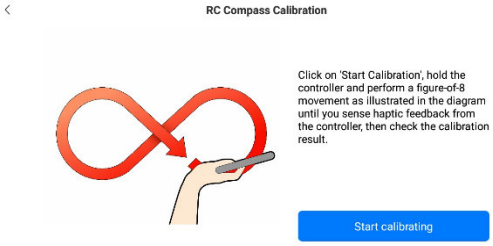

Important

- Please calibrate the RC compass in the wide out-door area.
- During calibration, stay away from areas with strong magnetic fields or large pieces of metal, such as magnetite mines, parking lots, buildings with underground reinforcement bars, underground or overhead power transmission lines, etc.
- Do not carry ferromagnetic or metallic objects with you during calibration, such as mobile phones, watches, etc.
- During the calibration process, stay away from electrified objects.

4.14 Calibrating the Remoter Controller

If there is abnormal situation in using the RC, it is recommended to calibrate it as shown below.

Table 4-18 Calibrating the RC

Step	Operation	Diagram
1	Turn on the remote controller. After entering the main interface of the Autel Enterprise App, tap “⊞” at the upper-right corner, tap “⚙“ and select "🤖", and then tap "RC Calibration". Then follow the on-screen instruction to calibrate the RC.	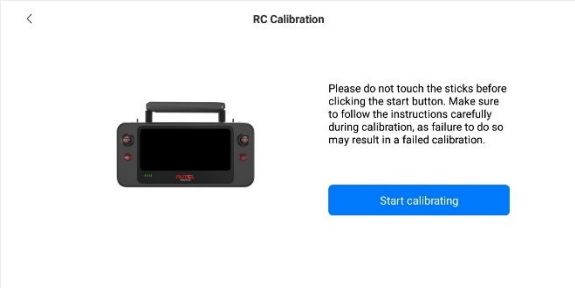
2	Dial wheel and stick calibration: follow the RC calibration instruction and turn the wheels and pull the sticks in directions as shown in the diagram and hold them for 1 second, then you will hear a beep, and at the same time the calibration direction icon will turn dark blue from grey, which means the calibration at this direction is successful. Calibration directions have no order. Until calibration of all directions is completed, the RC calibration is completed.	

Chapter 5 Smart Battery

5.1 Battery Introduction

The EVO Lite Enterprise Series aircraft comes standard with the MDXM_6175_1113 smart battery (hereafter referred to as smart battery) as the power battery. This battery is a rechargeable lithium-ion polymer (LiPo) battery and features high energy density and capacity. The smart battery can be charged with an MaxAd_3SA battery charger (model: AQ661-12755000D).

Remarks

- The battery charger is included as part of the aircraft kit. You do not need to purchase it separately.

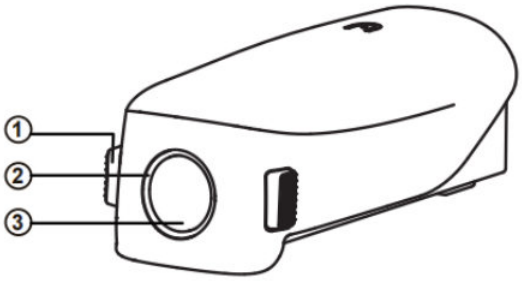

Fig 5-1 Battery Appearance

Table 5-1 Battery Appearance Details

No.	Name	Description
1	Unlock Button	To remove the battery from the aircraft. Press and hold the unlock buttons on both sides and pull out the battery.
2	Battery Level Indicator	Used to display the current battery level of the smart battery in normal situations.
3	Power Button	Long press the power button for 3s to turn on or turn off the battery.

5.2 Smart Battery Functions

The smart battery has the following functions:

■ Battery Level Display

The smart battery has a built-in battery level indicator, which shows the current battery level of the smart battery.

■ Communication

The aircraft can obtain real-time battery information, such as voltage, current, battery level, and battery temperature, through the communication interface on the smart battery.

■ Power Saving Mode

The smart battery will automatically shut down after 30 minutes of inactivity to reduce power consumption.

■ Dust and water resistance

After correctly installing the smart battery to the aircraft, the battery complies with IP43 protection level.

■ Ultra-low Power Mode

When the smart battery power is below 8%, the battery will enter the ultra-low power mode to reduce self-consumption. When entering ultra-low power mode, it needs to be activated by a charger before it can continue to use normally.

■ Self-discharge Protection

If the smart battery is stored in a high-temperature environment or not used for 6 days with a high battery level, the self-discharge protection will be activated. The smart battery will automatically discharge to a safe battery level and the discharge process takes 2-3 days.

Tips
● Although the battery has no indication of a self-discharge cycle, you may notice that the battery is slightly warm, which is normal.

■ Sleep Mode Protection

If the smart battery has a low battery level, it will automatically enter sleep mode to prevent over-discharge. In this mode, the smart battery does not respond when the power button is pressed. To wake up the battery, you can connect it to a battery charger.

■ Charge Temperature Protection

The smart battery will stop charging when its temperature is lower than 5°C or higher than 45°C during charging, as charging the battery under such temperatures will damage the battery.

■ Overcurrent Protection

The smart battery will stop charging when the charging current is too large, as charging the battery with a high current can severely damage the battery.

■ Overcharge Protection

Charging will stop automatically when the smart battery is fully charged, as overcharging can severely damage the battery.

■ Balance Protection

The voltage of each battery cell in the smart battery is automatically kept balanced to protect the battery and maximize the performance of the battery.

■ Short Circuit Protection

Once a short circuit is detected, the power supply of the smart battery will be cut off to protect the battery.

⚠ Warning
● Before using the smart battery, please carefully read and strictly follow the requirements in this Manual, “Battery Safety Operation Guidelines”, and “Disclaimer”, and those on the battery's surface sticker. The user shall undertake all consequences if he/she fails to follow the usage requirements.

5.3 Smart Battery Usage

- Please use a smart battery within the appropriate temperature range (0℃ ~ +40℃). Using it in too high or low temperatures will affect the battery’s safety and lifespan and may cause spontaneous battery combustion or permanent damage to the battery.
- Do not use the aircraft in a strong electrostatic (such as thunderstorms) or electromagnetic environment. Otherwise, some functions of the smart battery may fail (e.g., abnormal battery output and power failure), resulting in serious aircraft malfunctions.
- Do not use a smart battery that has ever been dropped from the aircraft or subjected to external impacts.
- Do not use a water-soaked smart battery or immerse a smart battery in water or other liquids. Water contact inside the battery may cause corrosion, resulting in spontaneous battery combustion and even an explosion.
- Do not use a smart battery that emits smoke, is bulged, leaks liquids, or has a damaged appearance.
- The liquid inside the smart battery is corrosive. If it leaks, please keep away from it. If it accidentally contacts your skin or eyes, rinse immediately with clean water for at least 15 minutes and seek medical attention.
- Do not disassemble, puncture, strike, crush, or burn a smart battery in any way. Otherwise, it may lead to battery combustion or even explosion.
- Do not short-circuit the positive and negative terminals of a smart battery.
- If the battery connector of a smart battery is dirty, use a dry cloth to clean it. Otherwise, it may cause poor contact, leading to energy loss or charging failure.
- Before replacing the smart battery of the aircraft, make sure that the battery connector, battery compartment interface, battery surface, and battery compartment surface are dry and free of water, and then insert the battery into the aircraft.
- When the smart battery is in a low temperature range below 10°C, the battery can be inserted into the aircraft to preheat it. When the battery is fully preheated before taking off, it is best to preheat it to above 20°C.
- In low-temperature environments, due to the limitation of smart battery output power, the aircraft's wind resistance will be reduced and its flight performance will be weakened. Please proceed with caution.
- When using the battery in a low-temperature environment (0℃ ~ +5℃), be sure to ensure that the smart battery is fully charged. The battery's discharge capacity will be reduced when operating in low temperature environments. Please turn on the aircraft first to heat the battery.

5.3.1 Installing/Removing the smart battery

Table 5-2 Install the Smart Battery

Step	Operation	Diagram
1	Turn off the smart battery before installing the battery.	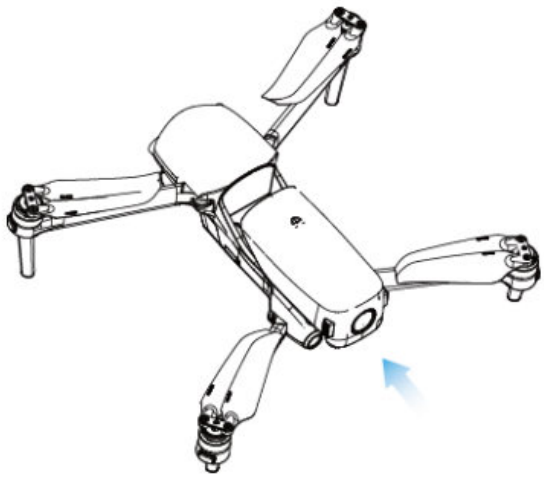
2	Slowly insert the smart battery into the battery compartment on the aircraft fuselage, and you will hear a clicking sound when the battery is in place.	

⚠ Warning

- If the smart battery is not installed properly, it may cause the battery to fall off during the flight, damage the aircraft, or even cause personal injury.
- Before installing the smart battery on the aircraft, make sure that the battery is turned off.

Table 5-3 Remove the Smart Battery

Step	Operation	Diagram
1	Turn off the smart battery before removing the battery.	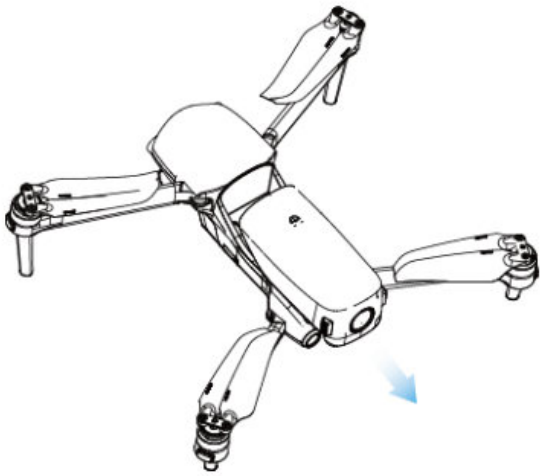
2	Press and hold the unlock buttons on both sides of the smart battery and slowly pull out the battery.	

❗ Important

- The unlock button of the smart batteries are consumable parts. Please do not press them hard to avoid any possible damage to the internal structure of the battery.

5.3.2 Turning on/off the smart battery

■ Turning on the smart battery

When the smart battery is turned off, press and hold the power button for 3 seconds to turn on the battery.

■ Turning off the smart battery

When the smart battery is turned on, press and hold the power button for 3 seconds to turn off the battery.

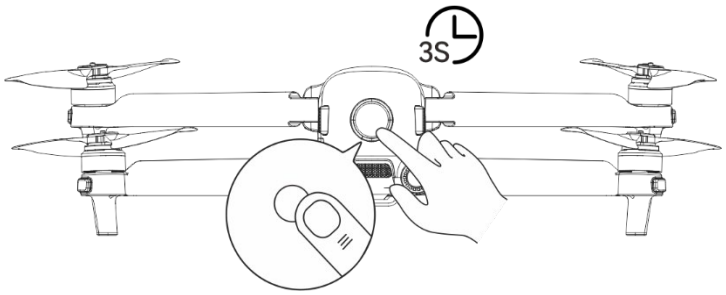

Fig 5-2 Turn On or Off the Smart Battery

Important

- If the smart battery is not installed in the aircraft, it is not recommended to turn on/off the battery, and attention should be paid to insulation protection at the battery connector.
- Before removing the smart battery from the aircraft, turn off the battery. The LED1 and LED4 battery level indicators on the smart battery will blink 5 times to indicate that the aircraft is shutting down. Remove the smart battery from the aircraft after all battery level indicators are off.

5.3.3 Checking the battery level

When the smart battery is off, short press the battery power button for 1 second to check the current battery level through the battery level indicator status.

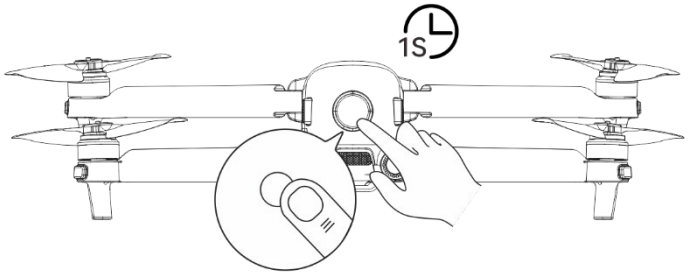

Fig 5-3 Checking Battery Level

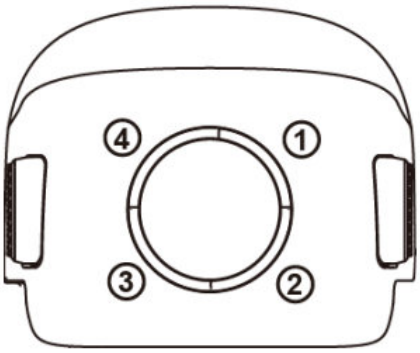

Fig 5-4 Distribution of Battery Level Indicator

Table 5-4 Battery Level Indicator Status (While Not Charging)

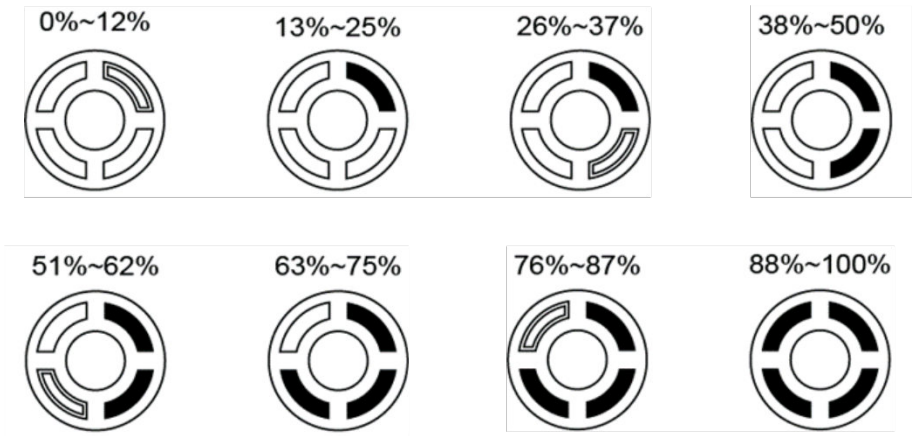

: Green light is always on : Green light blinking : Off

Tips

- After the aircraft is connected to the RC, you can check the current smart battery level of the aircraft in the top status bar of the Autel Enterprise and "Aircraft Battery" interface. For more information, please refer to "6.3 Status Notification Bar" and "6.5.5 Aircraft Battery" in Chapter 6.

5.3.4 Charging the smart battery

Connect the charging interface of the official battery charger to the notch of the metal electrode of the smart battery, and connect the plug to the AC power supply (100-240 V~ 50/60 Hz).

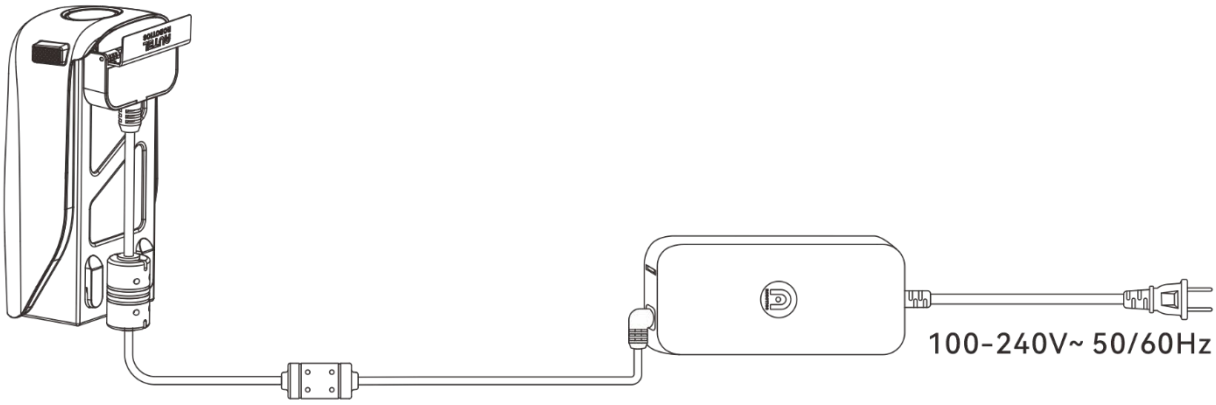

Fig 5-5 Use the Battery Charger to Charge the Smart Battery

Table 5-5 Battery Level Indicator Status (While Charging)

0%~25%	26%~50%	51%~75%	76%~100%

: Green light is always on : Green light blinking

⚠ Warning

- Do not charge a battery that emits smoke, is bulged, leaks liquids, or has a damaged appearance.
- Do not use damaged charging devices to charge the smart battery.
- Modifying the official smart battery or charging device provided by Autel Robotics is prohibited.
- Only use the battery and charging device provided by Autel Robotics. Autel Robotics is not responsible for any consequences, such as battery accidents and flight failure, caused by the use of third-party batteries or charging devices.
- Keep the smart battery away from flammable and explosive items during charging.
- After the smart battery is fully charged, disconnect the connection between the charger and the smart battery and power supply promptly.
- After flight, it is recommended to wait until the smart battery naturally cools down to an appropriate temperature before charging the battery. If the temperature of the smart battery is higher than 45°C, when the battery is connected to the charging device, the battery temperature protection function will be activated, and the battery cannot be charged until its temperature drops below 40°C.

Remarks

- It is recommended to fully charge the smart battery of the aircraft before the aircraft takes off. When the battery is fully charged, the battery level Indicator will turn off.
- Generally, it takes about 90 minutes to fully charge the smart battery of the aircraft, but the charging time is related to the remaining battery level.

Table 5-6 Other Battery Indicator Warning Instructions

LED1	LED2	LED3	LED4	Warning Description
○	◎	○	○	The temperature is too high or too low for charging.
○	○	◎	○	The charging current is too high, which causes a short circuit.
○	○	○	◎	A circuit overcurrent, a circuit overload, or a short circuit occurs during battery discharge.

◎: Indicator light blinking ○: Off

5.4 Storing and Transporting the Smart Battery

When storing the smart battery, keep the battery away from water or heat sources and store it in a dry, well-ventilated environment at room temperature.
Ideal storage conditions: The battery level is at around 60%, the ambient temperature is between 22°C to 28°C, and the ambient humidity is 65%±20% RH.
The energy of the MDXM_6175_1113 smart battery is 68.7 Wh (capacity is 6175 mAh). Please refer to local lithium battery transportation policies for battery shipping or carrying.

Warning

- Before storing or transporting the smart battery, please turn off the battery.
- Store the smart battery out of the reach of children and pets.
- Store the smart battery away from direct sunlight, water, or reactive chemicals.
- Do not expose the smart battery to open flame, explosives, or other hazards.
- Do not store the smart battery in extreme temperatures. Otherwise, the lifespan of the battery may be shortened and the battery may even become damaged or ineffective. If the battery is not used for more than 1 day, it should be stored below 30°C (at room temperature).
- Do not place the smart battery in a microwave or pressure cooker.
- Do not place the smart battery directly on conductive surfaces (such as metal shells or panels).
- Do not place heavy objects on the smart battery. When subject to an external force, the battery may be damaged or even catch fire or explode.

- Do not store or transport the smart battery with sharp objects, watches, metal necklaces, earrings, or other metal items.
- Do not transport batteries that have a damaged appearance or a battery level of more than 30%.
- If the smart battery is left idle for a long time, please charge it every three months to avoid a shortened battery lifespan resulting from long-term low battery levels.

5.5 Maintaining and Handling the Smart Battery

5.5.1 Maintaining the smart battery

In order to maintain the activity of the smart battery of the aircraft, it is recommended to perform battery maintenance if any of the following conditions are met:

- It is recommended to perform battery maintenance for the smart battery every 50 times of battery cycle.
- The idle time of the smart battery reaches 3 months.
- Occasionally, there are situations that affect the lifespan of the smart battery. In this case, you can try maintenance and repair.
- The Autel Enterprise reminds you when the smart battery needs maintenance.

The following battery maintenance check items are available for the smart battery:

1. Perform a standard charge and discharge operation on the smart battery.
2. Insert the smart battery into the aircraft and turn on the power. Check the battery information through the Autel Enterprise, whether the voltage difference between the battery cells is less than 0.1 V, and whether the battery firmware is up to date.
3. Check whether the smart battery is bulged, leaked, or damaged.
4. Check the battery connector for dirt, damage, or rust.

5.5.2 Standard charging and discharging process

Use the maintenance charging mode of the original charger, and proceed as follows:

1. Use the battery charger included in the standard aircraft kit to charge the smart battery to 100% and let the battery sit for 1 hour.
2. Insert the smart battery into the aircraft to fly, control the aircraft to land when the remaining battery level is less than 20%, and then take out the battery.
3. Let the smart battery sit for 8 hours.
4. After the above operations are completed, a standard battery charging and discharging operation is completed.

5.5.3 Smart battery replacement standards

- There are obvious bulges, leakage, and damage on the smart battery surface.
- Damage to or irreparable rust on the metal contacts at the power supply interface of the smart battery.

- After the number of cycles of the smart battery reaches 200, it is recommended to replace the battery with a new one.
- After 2 consecutive standard charge and discharge operations, if the abnormal battery still cannot be repaired, it is recommended to replace it with a new one.

5.5.4 Recycling the smart battery

If the smart battery is discarded due to damage, leakage, or other issues that compromise the integrity of the battery shell, it is recommended to completely immerse the battery in an insulated bucket filled with 5% salt water for more than 48 hours until the battery is completely discharged.
If the smart battery is normally retired, confirm that it is completely discharged, and then properly recycle it according to local lithium battery waste disposal policies to avoid environmental pollution.

Important

- When the smart battery catches fire, please use solid fire extinguishers such as sand or dry powder extinguishers.

Chapter 6 Autel Enterprise Application

6.1 Software Introduction

The Autel Enterprise Application is a flight control software developed by Autel Robotics for enterprise applications. The software integrates a variety of professional functions to quickly get started and improve efficiency; through a variety of built-in intelligent flight functions, it can realize highly intelligent aircraft operations and empower industry applications. Cooperating with the Autel Enterprise App, the aircraft can be widely used in public safety, inspection, and other industries. Also, it supports multiple mission modes such as waypoint missions, rectangular missions, and polygonal missions.

Note

- This chapter is based on Autel Enterprise Application of version 1.4.66, and some UI interfaces may differ due to version updates.
- More mission modes and functions will be available after subsequent app and firmware updates.

6.2 Main Interface

After pairing the remote controller with the aircraft, open the Autel Enterprise App, and you will automatically enter the main interface.

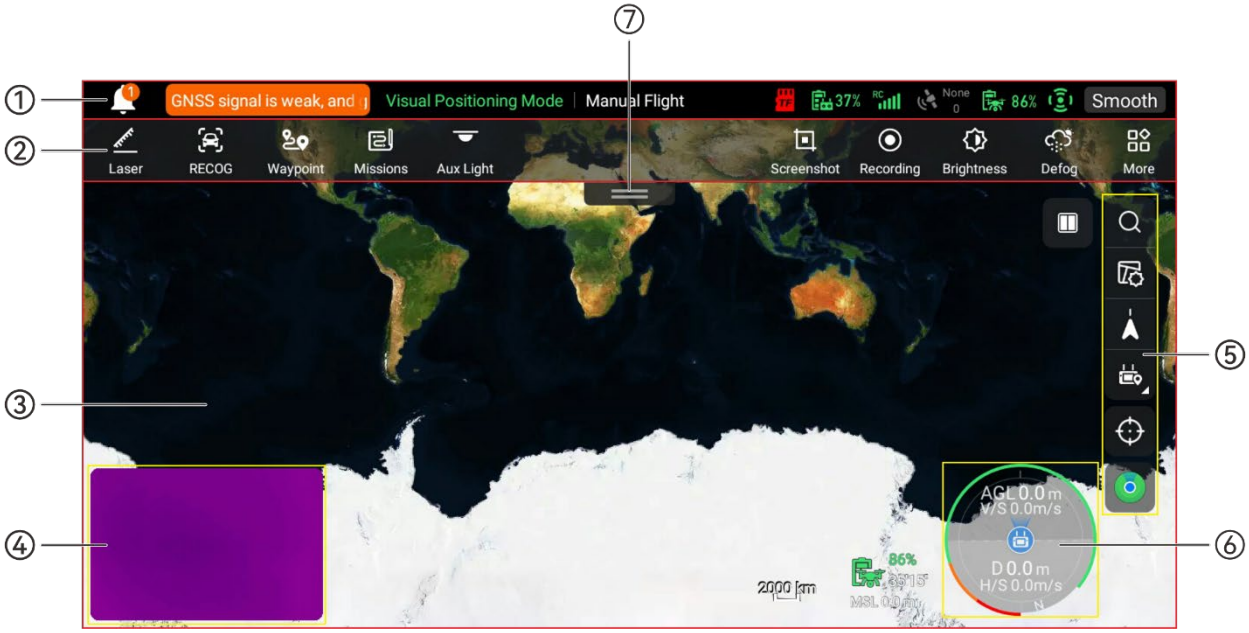

Fig 6-1 Main Interface of the Autel Enterprise Application (EVO Lite 640T Enterprise Aircraft)

Table 6-1 Details of the Main Interface of the Autel Enterprise App

No.	Name	Description
1	Status Notification Bar	Displays the flight mode, warning information, flight status, battery level of the remote controller and aircraft, remote controller signal, GNSS signal, operating status of the obstacle avoidance system, and other information.
2	Shortcut Toolbar	Offers quick access to certain frequently used functions.
3	"Map" Full-Screen Interface	You can freely scroll on the interface to view the map.
4	“Camera” Mini Window	Provides access to the wide-lens camera interface or IR camera interface.
5	Map function zone	Provides access to map management and device location.
6	Altitude Ball	Displays relevant flight data and information of the aircraft in real time, used for assisted flight.
7	Toolbar hide button	Tap to hide the shortcut toolbar.

Tip

- The Autel Enterprise Application can automatically identify the gimbal camera model mounted on the aircraft and adjust the display content of the main interface accordingly. When an aircraft with a different gimbal camera model is connected to the remote controller, the display content on the main interface of the Autel Enterprise Application may vary. This chapter is based on EVO Lite 640T Enterprise Aircraft for description.

Table 6-2 Multi-Screen Switching Operations on the Main Interface

No.	Icon	Meaning	Description
1		Dual-Screen Mode	When using EVO Lit 640T Enterprise aircraft, tap this icon to enter the dual-screen mode. In the dual-screen mode, the left and right sides of the remote controller screen can display any two of the 3 interfaces, which are "Map", "Wide Angle", and "Infrared".
2		Maximize Window	Tap this icon to adjust a preview interface to the corresponding full-screen interface.

Tip

- In wide angle or infrared camera interface, you can swipe up anywhere to hide all function icons and swipe down to restore the display of function icons.

6.3 Status Notification Bar

Fig 6-2 Status Notification Bar of the Autel Enterprise App

Table 6-3 Details of the Status Notification Bar of the Autel Enterprise App

No.	Icon	Meaning	Description
1	The compass is abn...	Status and Fault Warning	Displays the current warning information of the aircraft: ➢ Gray indicates that the remote controller is not connected to the aircraft. ➢ Orange indicates a medium-level warning. In this case, the aircraft will not be prohibited from taking off but should pay attention to flight safety. ➢ Red indicates a high-level warning. In this case, the aircraft will be prohibited from taking off and can take off only after you solve the fault.
2	Visual Positioning Mode	Flight Status	Displays the current flight status. There are 3 modes: GNSS mode, visual positioning mode, and ATTI mode. For more information, see "3.8.1 Flight Status" in Chapter 3.
3	Manual Flight	Mission Status	Displays the current mission type and mission status of the aircraft.
4	TF	No SD Card	Indicates that there is no microSD card installed in the aircraft currently.
5		Remote Controller Battery	Displays the current battery level of the remote controller.
6	RC	Remote Controller Signal Status	1. Displays the current communication signal status between the remote controller and the aircraft. 2. Tap this icon to display the specific signal status: When the signal is 3-5 grids, the remote controller signal is displayed as strong. When the signal is 1-2 grids, the remote controller signal is displayed as weak.

			3. When the remote controller is not connected to the aircraft, the remote controller signal is displayed in gray color.
7		GNSS Signal Status	1. Displays the current GNSS positioning signal status of the aircraft. 2. Tap this icon to display the specific signal status and satellite connection status. 3. If the aircraft receives no GNSS signal, the GNSS signal is displayed in gray color.
8		Aircraft Battery	1. Displays the current battery information of the aircraft. 2. Tap this icon to display the battery level, voltage, and temperature of the aircraft battery.
9		Obstacle Avoidance System	Displays the current activation status of the aircraft obstacle avoidance system. ➢ Green indicates that the obstacle avoidance system is activated. ➢ Red indicates that the obstacle avoidance system is deactivated.
10	Standard	Speed Mode Display	Displays the current speed mode of the aircraft. Four modes are available, that is, Slow mode, Smooth mode, Standard mode, and Ludicrous mode. For more information about the speed modes, see "3.9.2 Flight modes" in Chapter 3.

6.4 Shortcut Toolbar

The shortcut toolbar is displayed at the bottom of the system status notification bar of the Autel Enterprise App, which allows you to quickly activate certain functions.
In the shortcut toolbar, you can long press and drag the function icons to customize the sorting. At the same time, you can also tap on the "" icon to enter "Shortcuts" and then tap on the "" icon on the right side of "Shortcuts" to add a function icon into or delete a function icon from the shortcut toolbar.

Tip
● You can add a maximum of 12 function icons to the shortcut toolbar.

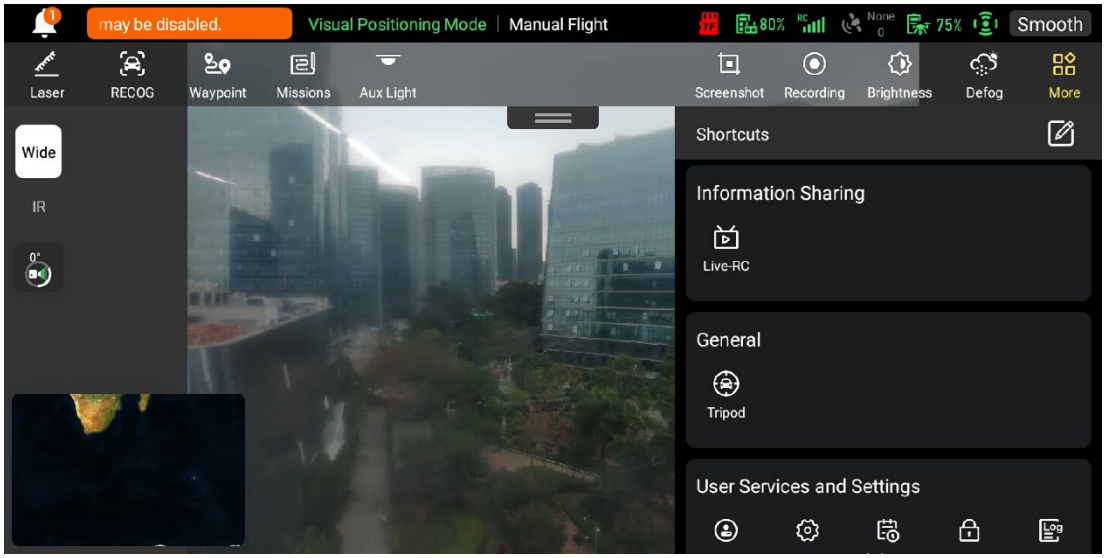

Fig 6-3 Shortcut Toolbar

Table 6-4 Shortcut Toolbar Details

No.	Icon	Name	Description
1		Stitch	Tap this icon to configure the remote controller to connect to a server with 2D and 3D mapping software installed, which allows for fast mapping.
2		Laser	Tap this icon to automatically measure the distance from the target point at the center of the lens to the aircraft, as well as the target point's altitude and coordinates (longitude and latitude).
3		RECOG	Tap this icon to intelligently identify the target object type.
4		Waypoint	Tap this icon to enter the "Waypoint" mission editing interface.
5		Missions	Tap this icon to enter the “Missions” interface, where you can query, edit, favorite, and delete previously saved historical flight missions.
6		Aux Light	Tap this icon to turn on the bottom LED auxiliary light, which can assist in landing and enhance the aircraft's visual sensing capabilities in weak-light environments.
7		Screenshot	Tap this icon to capture the current screen in a screenshot.
8		Recording	Tap this icon to start recording the current screen.

9		Brightness	Tap this icon to move the slider left and right to adjust the brightness of the camera.
10		Defog	Tap this icon to make the shooting or recording scene more transparent and enhance color contrast, which is used to eliminate the "fogging phenomenon" in the picture or the lack of picture clarity caused by smog.
11		Tripod	Tap this icon, and the camera will automatically lock onto the selected target. After it is enabled, the camera of the aircraft focuses on the selected target, instead of the aircraft following the target.
12		More	Tap this icon to enter the “Shortcuts”, where you can view all shortcut function icons.
13		Edit Shortcuts	Tap this icon to add function icons from "Shortcuts" to the "Shortcut Toolbar" or move the function icons in the "Shortcut Toolbar" to "Shortcuts".
14		Rectangle	Tap this icon to enter the "Rectangle" mission editing interface.
15		Polygon	Tap this icon to enter the "Polygon" mission editing interface.
16		Record	Tap this icon to record real-time attitude, motion, and other parameters of the aircraft and gimbal camera during a flight mission, which allows for repeating the operation process for the next mission.
17		Mission Import	Tap this icon to import missions saved in local (supports KML format) to the mission library.
18		Album	Tap this icon to view materials from the aircraft's album and the local album and download or delete them.
19		Professional Imagery	Tap this icon to make professional settings for the gimbal camera parameters.
20		Live-RC	Tap this icon to set live streaming of real-time aerial videos from the aircraft. Two streaming methods, that is, RTMP and GB28181, are supported.
21		Settings	Tap this icon to enter the “Settings” interface.

22		Flight Log	Tap this icon to view the flight logs of the aircraft or synchronize them to a third-party platform. To use this function, you need to log in to your Autel account.
23		Encrypt	Tap this icon to set a security password for encrypting captured media materials.
24		Log	Tap this icon to query the flight logs of the aircraft. To use this function, you need to log in to your Autel account.
25		Support	Tap this icon to enter the "Personal Center" interface.

6.5 “Settings” Interface

On the main interface of the Autel Enterprise App, tap the “” icon on the right side of the shortcut toolbar, and then tap the “” icon to enter the "Settings" interface.
In the "Settings" interface, you can set parameters such as flight control, obstacle avoidance, remote controller, image transmission, battery, and gimbal.

6.5.1 Flight Control Parameter Setting

In the sidebar of the “Settings” interface, tap the "" icon to enter the "Flight Control Parameter Setting" interface, where you can set the relevant flight control parameters for the aircraft, as shown below.

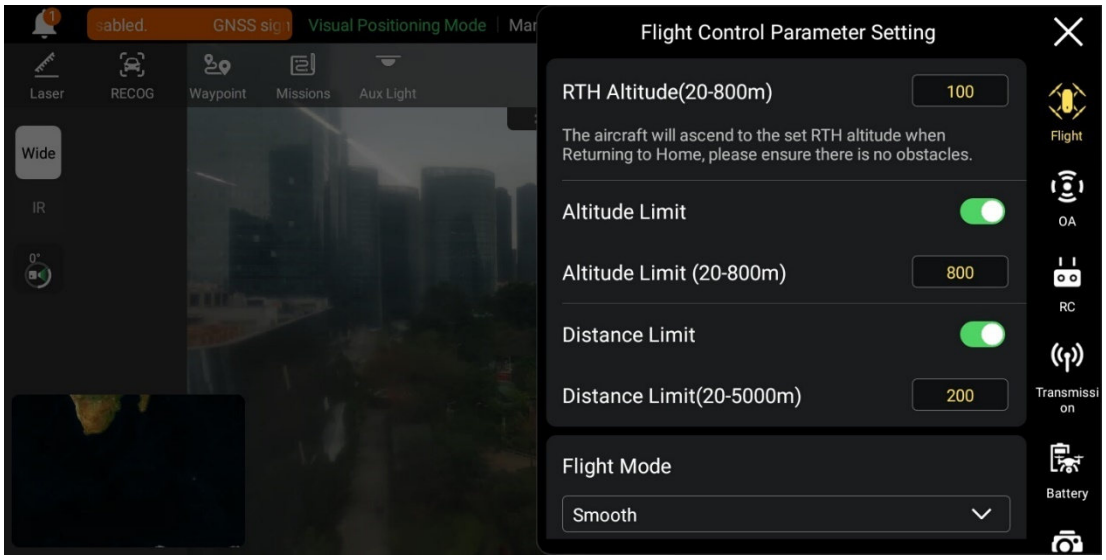

Fig 6-4 "Flight Control Parameter Setting" interface

■ **Set RTH Altitude**

Tap the "RTH Altitude" edit box and enter the value. When executing an auto-return, the aircraft will rise to the RTH altitude before starting the return process.

⚠ Warning

- Although the Autel Enterprise Application allows you to set a flight altitude within the range of 20-800 meters, this does not mean that the set altitude complies with local laws and regulations.
- The RTH altitude should be set higher than the altitude of obstacles within the flight operation area.
- The RTH altitude setting should comply with local (within the flight operation area) laws and regulations.
- For information about adjusting the RTH altitude of the aircraft, see "2.7.4 Auto return home mechanism" in Chapter 2.

■ Turn On/Off Altitude Limit

Tap the button on the right side of "Altitude Limit" to turn on or off the altitude limit function.

➢ If this function is turned on, enter the altitude limit value in the edit box of "Altitude Limit (20-800m)" that pops up below, and the aircraft can rise up to the maximum altitude specified.

➢ If this function is turned off, the aircraft can keep ascending according to your operation until the battery is exhausted.

Tip

- The altitude limit should not be set lower than the RTH altitude value.
- The altitude limit setting should comply with local (within the flight operation area) laws and regulations. Flying the aircraft in an unsuitable flight altitude may have legal risks. Please comply with the fight safety requirements of relevant areas during flight operations.

■ Turn On/Off Distance Limit

Tap the button on the right side of "Distance Limit" to turn on or off the distance limit function.

➢ If this function is turned on, enter the distance limit value in the edit box of "Distance Limit (20-5000m)" that pops up below, and the aircraft will fly within a circle with the take-off point as the center and the distance limit value as the radius.

➢ If this function is turned off, the aircraft can keep moving according to your operation until the battery is exhausted.

Tip

- Appropriate altitude limit and distance limit settings can improve flight safety.

■ Set Flight Mode

Tap the "Flight Mode" drop-down list, and then select the appropriate mode from Slow, Smooth, Standard, and Ludicrous, that is, set the default speed mode every time you open the Autel Enterprise App. For the meaning of each mode, see "3.8.2 Flight modes" in Chapter 3.

■ Set Home Point

Tap “Aircraft” or “RC” to set the home point.

- If "Aircraft" is selected, the home point is the position where the aircraft currently is.
- If "RC" is selected, the home point is the current position of the remote controller.

Note

- If the home point is not set, the aircraft will record the take-off point as the default home point.

■ Calibrate Compass/ IMU

Perform the calibration operation as instructed in the Autel Enterprise App. For more information, see “2.11 Aircraft Calibration” in Chapter 2.

■ Set Lost Action

Tap the drop-down list of "Signal Lost" to set the aircraft actions when disconnected.
Lost action refers to the action that the aircraft will perform when the aircraft is disconnected from the remote controller during flight. By default, the lost action is set to “Return to Home”.

- If “Return to Home” is selected, when the aircraft disconnects, the aircraft will automatically return to the home point.
- If "Hovering" is selected, when the aircraft disconnects, the aircraft will hover at the current position.
- If "Land" is selected, when the aircraft disconnects, the aircraft will land at the current position.

Tip

- When the aircraft is disconnected from the remote controller, the aircraft will decelerate. If the connection is not restored after 4 seconds, the aircraft will execute the signal lost action.
- When the aircraft initiates a return to home due to a disconnection, even if the aircraft re-connects to the remote controller, it will continue the return process. In this case, you can press the pause button “⏸” on the remote controller to pause the return process or press and hold the pause button “⏸” for 2 seconds to exit the return process to regain control of the aircraft.

6.5.2 OA Settings

In the sidebar of the “Settings” interface, tap the "" icon to enter the "OA Settings" interface, where you can set the OA system, brake distance, warning distance, radar display, obstacle detection notification sound, and landing protection as shown below.

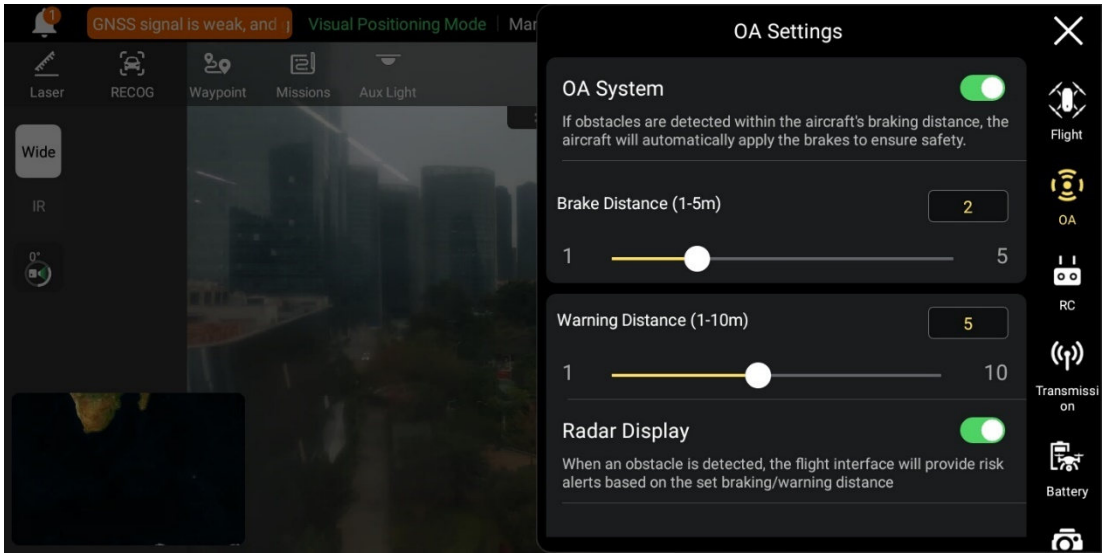

Fig 6-5 "OA Settings" Interface

■ Turn On/Off OA System

Tap the button to the right of "OA system" to turn on/off the OA system function.

- If this function is turned on, you can set the brake distance. Enter a value in the edit box to the right of “Brake Distance (1-5m)” that pops up below, or adjust the value by moving the slider below left and right. When the aircraft detects an obstacle, it will stop at the brake distance as set.
- If this function is turned off, when the aircraft detects an obstacle, it will not stop.

⚠ **Warning**
● To ensure flight safety, it is recommended to always turn the OA system on. ● When the flight mode of the aircraft is set to “Ludicrous”, the OA system function is unavailable.

■ Set Warning Distance

Enter a value in the edit box to the right of "Warning Distance (1m-10m)", or adjust the value by moving the slider below left and right. If the aircraft detects an obstacle, it will send a warning at the warning distance as set.

■ Turn On/Off Radar Display

Tap the button to the right of "Radar Display" to turn on or off the radar display function.

- If this function is turned on, when the aircraft detects an obstacle, it will provide risk warnings on the camera interface based on the set brake/warning distance.
- If this function is turned off, when the aircraft detects an obstacle, it will not provide risk warnings on the camera interface.

■ Turn On/Off Obstacle Detection Notification Sound

Tap the button to the right of "Obstacle Detection Notification Sound" to turn on or off the obstacle detection notification sound function.

- If this function is turned on, when the aircraft detects an obstacle, it will emit an audible alert.

■ Turn On/Off Landing Protection

Tap the button to the right of "Landing Protection" to turn on or off the landing protection function.

➢ If this function is turned on, the aircraft will detect whether the ground surfaces are suitable for landing before it lands.

Tip
● After the landing protection function is turned on, if the aircraft detects that the ground surface is not suitable for landing, it will keep hovering over the landing point. In this case, you need to use the command sticks to manually control the aircraft to land at an appropriate location.

6.5.3 RC Settings

In the sidebar of the “Settings” interface, tap the "" icon to enter the "RC Settings" interface, where you can set the stick mode, RC custom buttons, and EXP, and calibrate the remote controller and the remote controller compass, as shown below.

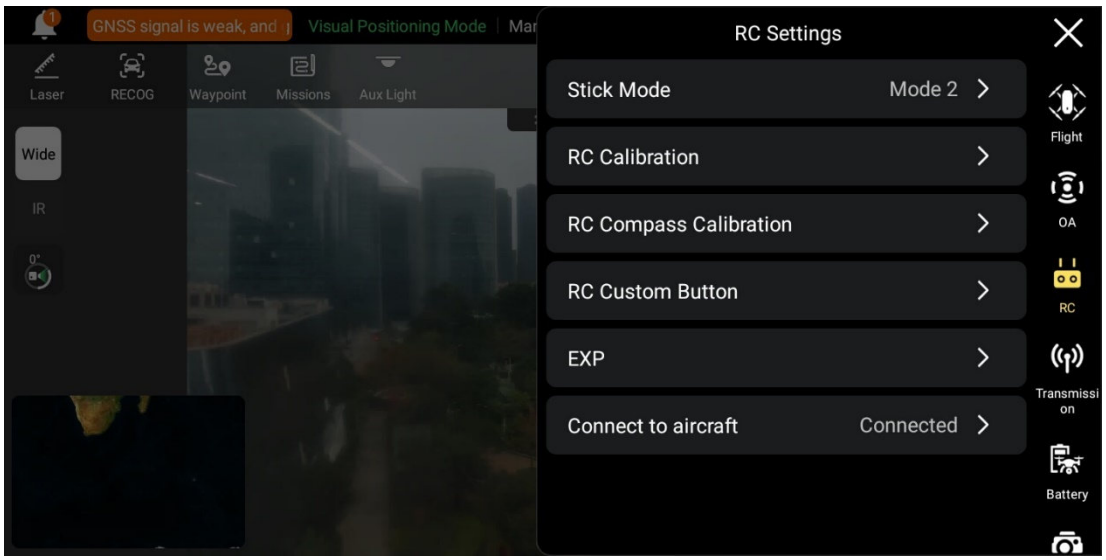

Fig 6-6 “RC Settings” Interface

■ Set Stick Mode

Tap "Stick Mode" and select one of the three stick modes, that is, Mode 1, Mode 2, and Mode 3, according to your preferences. For the differences between the three stick modes, see "4.10.1 Stick Modes" in Chapter 4. The default stick mode is Mode 2.

■ Calibrate the Remote Controller

Perform the calibration operation as instructed in the Autel Enterprise App. For more information, see “4.14 Calibrating the Remote Controller” in Chapter 4.

■ Calibrate the RC Compass

Perform the compass calibration operation as instructed in the Autel Enterprise App. For more information, see “4.13 Calibrating the Remote Controller Compass” in Chapter 4.

■ Set RC Custom Button

Tap "RC Custom Button", and then tap the drop-down list of C button, and select the customized function according to your needs. For more information, see “4.11.1 Custom Button C” in Chapter 4.

■ Set EXP

After tapping "EXP", drag the coordinate system curves of "Ascend - Descend", "Turn Right – Turn Left", and “Forward/Move Right – Backward/Move Left” according to your needs, or input coefficients (in the range of 0.2-0.7) in each edit box.

The X-axis is the physical output of the command stick, and the Y-axis is the logical output of the command stick. That is, the X-axis represents the movement generated by the current command stick move, and the Y-axis represents the actual response strength of the current aircraft.

When the coefficient is 0.2, the slope of the curve increases gradually, which is convenient for fine-tuning; when the coefficient is 0.7, the slope of the curve gradually decreases, and the aircraft responds strongly when the command stick is slightly moved. Tap "Reset EXP Parameters" to reset the EXP parameters.

■ Connect to Aircraft

- Connect to aircraft: If the remote controller is currently not connected to the aircraft, tap "Connect to aircraft", and then double-click the power button of the aircraft according to the pop-up notification to complete the frequency pairing between the remote controller and the aircraft. For more information, see “4.9 Frequency Pairing With the Remote Controller” in Chapter 4.
- Cancel: If the remote controller is currently connected to the aircraft, tap "Connect to aircraft", and then tap “Cancel” in the pop-up window to disconnect the remote controller from the aircraft.

6.5.4 Image Transmission Settings

In the sidebar of the “Settings” interface, tap the "((•))" icon to enter the "Image Transmission Settings" interface, where you can set the image transmission mode, and transmission frequency band as shown below.

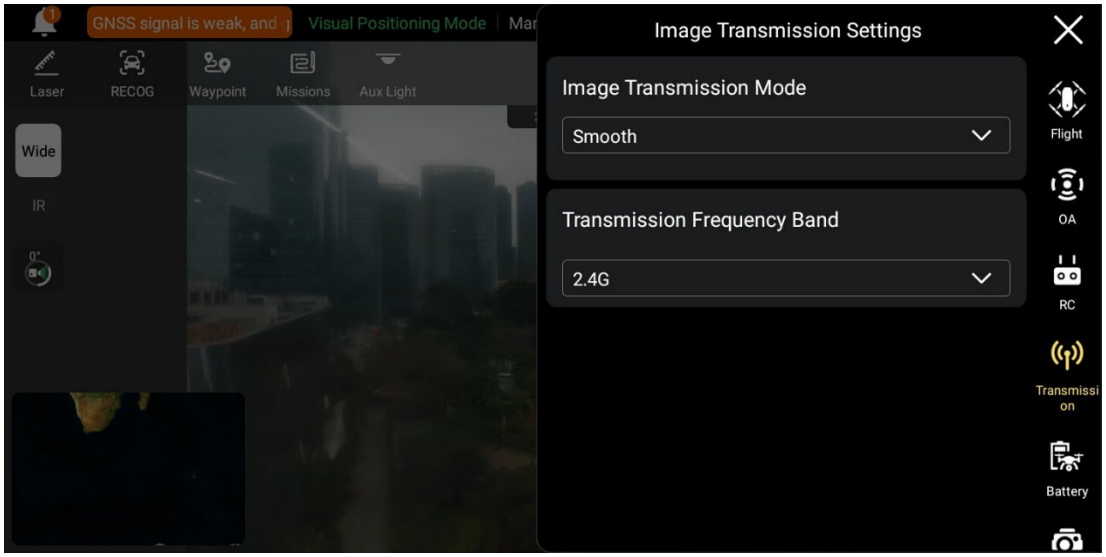

Fig 6-7 "Image Transmission Settings" Interface

■ Set Image Transmission Mode

Tap the drop-down list of "Image Transmission Mode" and select “Smooth” or “HD” according to your needs. Once selected, the remote controller will receive and display the image transmission screen at the selected resolution.

Tip
● “Smooth” means 720P and "HD" means 1080P.

■ Set Transmission Frequency Band

Tap the drop-down list of "Transmission Frequency Band" and select a transmission frequency band according to your needs.

- Auto: The optimal transmission frequency band is automatically selected for image transmission between the aircraft and the remote controller.
- 2.4G: The 2.4 GHz frequency band is used for image transmission between the aircraft and the remote controller.
- 5.8G: The 5.8 GHz frequency band is used for image transmission between the aircraft and the remote controller.

6.5.5 Aircraft Battery

In the sidebar of the “Settings” interface, tap the "" icon to enter the "Battery Information" interface, where you can view the basic information of the current aircraft battery (that is, smart battery), and set the battery warning threshold, as shown below.

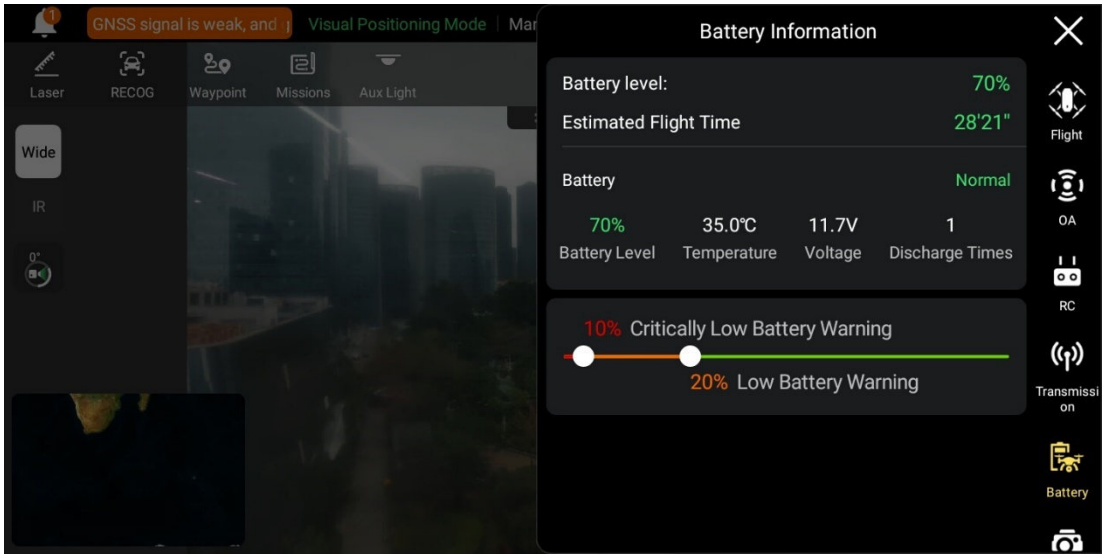

Fig 6-8 “Battery Information” Interface

■ View Basic Information of the Smart Battery

You can view the real-time status of the battery and the estimated flight time of the aircraft with the current battery level. Please refer to the parameters in the following table to view the basic information of the battery, so as to deal with it in time when the battery condition is not good.

Table 6-5 Power Parameter Details

Parameter	Description
Battery Level	If the battery level is higher than or equal to the critically low battery warning threshold and lower than or equal to the low battery warning threshold. In this case, there will be an orange warning. If the battery level is lower than or equal to the critically low battery warning threshold, there will be a red warning.
Temperature	The temperature range is -10°C-65°C. 5°C ≤ battery temperature ≤ 65°C, the temperature is normal. -10°C ≤ battery temperature < 5°C, the temperature is low, and there will be an orange warning. If the battery temperature is lower than -10°C, the temperature is too low and there will be a red warning. If the battery temperature is higher than 65°C, the temperature is too high and there will be a red warning.
Voltage	Normal voltage range: 8.4-12.75V. When it exceeds the normal range, there will be a red warning.
Discharge Times	The normal range of the number of discharges is 0-200 times. When it exceeds the normal range, there will be a red warning.

■ Set Battery Warning Threshold

Move the slider left or right to set warning thresholds for low battery and critically low battery.

- Critically Low Battery Warning: Red status. The adjustable range is from 8% to 25%.
- Low Battery Warning: Orange status. The adjustable range is from 15% to 50%. The low battery warning threshold should be at least 5% higher than the critically low battery warning threshold.

6.5.6 Gimbal Settings

In the sidebar of the “Settings” interface, tap the "" icon to enter the "Gimbal Settings" interface, where you can set the gimbal pitch sensitivity and extended pitch angle, or calibrate and adjust the gimbal, as shown below.

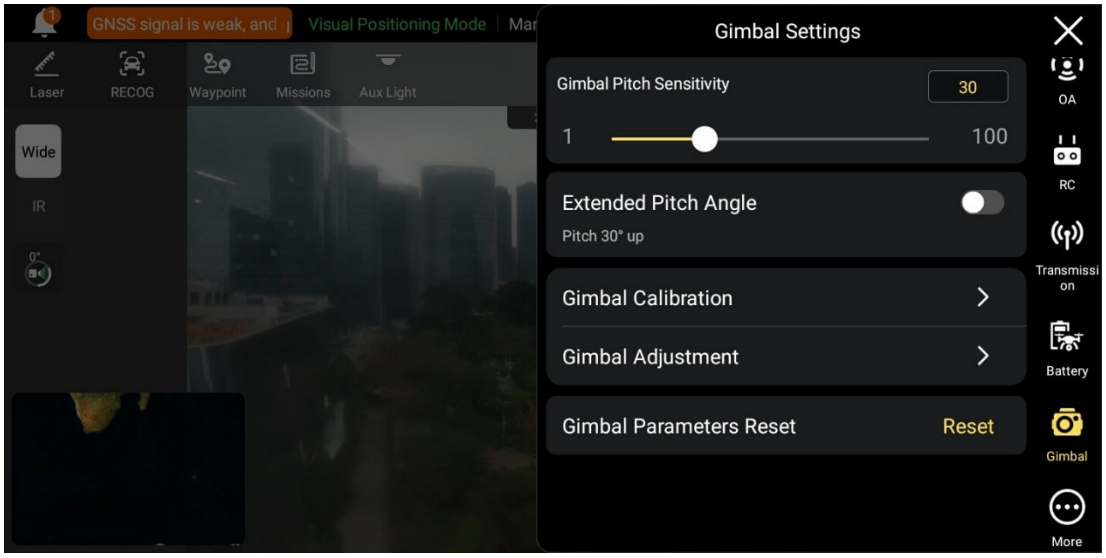

Fig 6-9 "Gimbal Settings" Interface

■ Set Gimbal Pitch Sensitivity

Enter a value in the edit box to the right of "Gimbal Pitch Sensitivity", or move the slider left or right to adjust the value, so as to set the number of degrees the gimbal rotates on the pitch axis per second (unit: °/second).

■ Turn On/Off Extended Pitch Angle

Tap the button to the right of "Extended Pitch Angle" to turn on the upward gimbal rotation function.

- If this function is turned on, the gimbal can rotate up to 30 degrees above the level baseline.
- If this function is turned off, the gimbal can only maintain a level or downward rotation and cannot rotate upwards to switch to a pitch view.

■ Gimbal Calibration

When there is an abnormality in the gimbal, tap "Gimbal Calibration", and then tap the "Start calibration" button, and the gimbal will automatically start calibrating. For more information, see "2.11.3 Gimbal auto calibration" in Chapter 2.

■ Gimbal Adjustment

When the position of the gimbal tilts, tap "Gimbal Adjustment" and tap the buttons under the functions of "Roll", "Yaw", and "Pitch" to adjust the gimbal, so that the horizontal and vertical axes on the screen remain aligned to the reference objects on the three-screen image transmission screen.

■ Gimbal Parameters Reset

Tap the "Reset" button, and then tap the "Confirm" button to reset the gimbal parameters.

6.5.7 More

In the sidebar of the "Settings" interface, tap the "⊙" icon to enter the "More" interface, where you can configure unit settings, light settings, safety, target recognition settings, and the language settings of the Autel Enterprise Application for the aircraft and manually check for updates to the App or firmware.