User Manual

EVO Nano Series

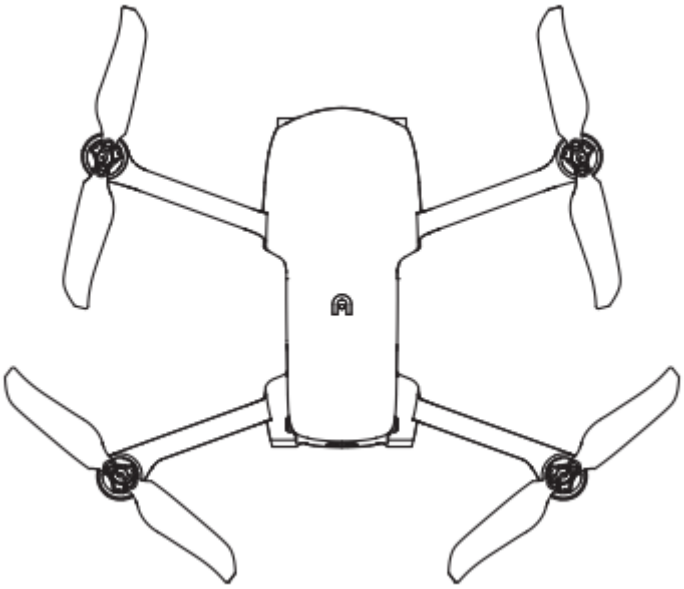

AUTEL

Terms for Usage

Thank you for your interest in the industry aircraft products provided by Autel Robotics Co., Ltd (hereinafter referred to as "Autel Robotics"). Please read the following terms carefully and acknowledge that you have understood and agreed the following terms, conditions and safe operation guide.

Trademark Information

The trademarks EVO Nano™, EVO Nano+™, Autel Sky™, Autel SkyLink™ and Autel Robotics® are the registered trademarks of Autel Robotics in China and other countries/regions. All other products and company name mentioned in this Manual are the registered trademark of their respective owners.

Copyright

Without the explicit consent of Autel Robotics, do not copy or forward any part of the Manual in or by any form (electronic, mechanical, reproducing, recording or other forms).

Disclaimer

In order to ensure safety and successfully operate your EVO Nano aircrafts, please abide by the operating instructions and procedures of this Manual. Users under 16 years must use the aircraft under the supervision of a professional adult. The aircraft shall be kept out of the reach of children when it is not used.

If user fails to abide by the safe operating instructions, Autel Robotics will assume no responsibility for any product damage or loss--direct or indirect, legal, special or economic loss (including but not limited to profit loss) during use, and will not provide warranty service. Never modify your product by using any incompatible component or any method that is not required in Autel Robotics official description. This Manual will show you the safe operating procedures of aircrafts. Please acknowledge that your operation will not endanger your and other personal and property safety. This Manual will update without a fixed schedule. In order to ensure your use of the latest version, please visit: www.autelrobotics.com

Data Storage and Use

The backup service function of this product is disabled by default, so user and flight information will not be uploaded or propagated through mobile device. When Autel Sky™ APP is connected with an aircraft, the flight log including the flight remote sensing data will be uploaded and saved in the Autel Robotics data server. All remote sensing data and flight logs are stored in the data server in the United States, but the data can be uploaded automatically only when the flight log backup option is enabled. Without the explicit authorization of user through APP, Autel Robotics customer service team has no right to access to the flight log data. With the authorization, it is only

allowed to access to the flight logs within the selected time.

Various still images, motion images and data from the aircraft sensor will be stored in the internal drive of aircraft. If your UAV needs repair, then the information stored in the internal memory unit can be used for problem diagnosis. This information will not be retained, unless for processing service or repair. Never delete or change any data stored in the internal memory unit in any form, otherwise Autel Robotics will not provide warranty.

The data collected by Autel Robotics are for providing support and service and improving product performance. We will seriously treat your privacy like ourselves. We can agree to disclose any uploaded data only when the law requires.

Table of contents

Chapter 1 Read Instructions 5
1.1 Legend keys 5
1.2 Product document 5
1.3 Download Autel Sky App 5
Chapter 2 Aircraft 6
2.1 Components description 6
2.2 Flight indicator 7
2.3 Aircraft battery 8
2.3.1 Battery use 8
2.3.2 Battery function 10
2.3.3 Precautions 11
2.4 Gimbal and camera 12
2.4.1 Gimbal overview 12
2.4.2 Camera overview 14
2.4.3 Use Micro SD card 15
2.5 Propeller 15
2.5.1 Install propeller 15
2.5.2 Disassemble propeller 16
2.6 Intelligent flight control system 16
2.6.1 Flight mode 17
2.6.2 Intelligent flight features 18
2.6.3 Compass calibration 20
2.7 Binocular vision system 21
2.7.1 Precautions 21
Chapter 3 Remote controller 23
3.1 Components description 23
3.2 Use remote controller 24
3.2.1 Turn on/off remote controller 24
3.2.2 Charge remote controller 24
3.2.3 Control camera 25
3.2.4 Remotely control aircraft 25
3.3 Remote controller calibration 26
3.4 Remote controller pairing 27
3.5 Optimum communication range 28
Chapter 4 Autel Sky App 29
4.1 Interface introduction 29
4.1.1 Home page 29
4.1.2 Camera interface 30
4.2 Camera function 34
4.2.1 Quick transfer 34

4.2.2 One-click short film 34
4.2.3 Intelligent follow 36
Chapter 5 Flight 38
5.1 Safe operation guide 38
5.1.1 Flight environment 38
5.1.2 Pre-flight 38
5.1.3 In-flight 39
5.1.4 Storage and maintenance 39
5.2 Flight preparation 39
5.2.1 Battery preparation 39
5.2.2 Remote controller preparation 39
5.2.3 Aircraft preparation 40
5.3 Flight operation 40
5.3.1 Basic flight 41
5.3.2 Takeoff 41
5.3.3 Landing 42
5.4 Flight restrictions 42
5.4.1 Classification of restricted area 43
5.4.2 Height limit and distance limit 43
Chapter 6 Maintenance and service 44
6.1 Firmware update 44
6.1.1 Download and update firmware 44
6.2 Storage and maintenance 45
6.3 Warranty 45
6.4 Customer service 46
Annex Specification parameter 48

Chapter 1 Read Instructions

Thank you for your purchase of EVO Nano series and welcome your experience in Autel Robotics products. With this Manual, you can understand the features of EVO Nano series and learn to operate this aircraft and remote controller optimally. Before first use of EVO Nano series, please read this Manual and attached documents and get ready this Manual at any moment for reference.

1.1 Legend keys

Please pay attention to the legend keys in this Manual.

⚠ Warning: remind the possible danger

Important: precautions

Remark: supplementary information for your better understanding

1.2 Product document

Autel Robotics provides users with the following documents that users can obtain the optimal experience:

1. *User Manual*
2. *Quick Start Guide*
3. *Disclaimer and Safe Operation Guide*

Users are recommended to first view the *Disclaimer and Safe Operation Guide* and then read the *Quick Start Guide* to understand the use procedure.

Please read the *User Manual* for the detailed information on products.

⚠ **Warning**

- Please check the aircraft and other accessories listed on the part list in packing box. Do not modify this aircraft by using any incompatible component or any method that is not required in official description.

1.3 Download Autel Sky App

Autel Sky™ App can provide the real-time image transport, senior flight and camera control methods for your mobile device. Search **Autel Sky** in App Store or Google Play, and then press **INSTALL** (installation).

Autel Sky™ App can support Android 8.0 and above system and iOS 12.0 and above system.

Chapter 2 Aircraft

EVO Nano series aircraft is designed with a folding design fuselage, weighing less than 249g, which is light and portable. EVO Nano series UAVs not only have advanced functions such as indoor and outdoor stable hovering and intelligent flight, but also have strong flight performance. The fastest flight speed is 54km/h and the longest flight time is about 28 minutes.

EVO Nano series UAVs are equipped with EVO Nano and EVO Nano+. The cameras of the two products use 1/2 inch and 1/1.28 inch CMOS respectively, which can take 48 million and 50 million pixel photos respectively. Combined with high-precision three-axis stabilized PTZ, they can stably take 4K HD video. A variety of intelligent shooting modes such as one-click short film, panorama and delay can be realized through the new Autel Sky App to easily play with shooting of various styles. The APP has built-in rich templates. After selecting the materials, you can apply the templates into films, and share them to the social platform through mobile phone direct transfer or one-click sharing, so as to quickly download and share your works.

EVO Nano series adopts the new generation of Autel Skylink image transmission technology of AUTEL intelligent, and supports double reception and double transmission in three frequency bands of 2.4GHz, 5.8GHz and 5.2GHz. It can realize image transmission as far as 10km in a non-interference and non-shielding environment, and the image transmission resolution is up to 2.7K; the remote controller is equipped with a mobile device bracket, which can place mobile devices, and display high-definition images on mobile devices in real time through Autel Sky App.

Remark

- The maximum flight speed is measured adjacent to the sea level when there is no wind.
- The use of 5.8 GHz / 5.2GHz has not been supported in some countries and regions. Please understand local laws for reasonable use.

2.1 Components description

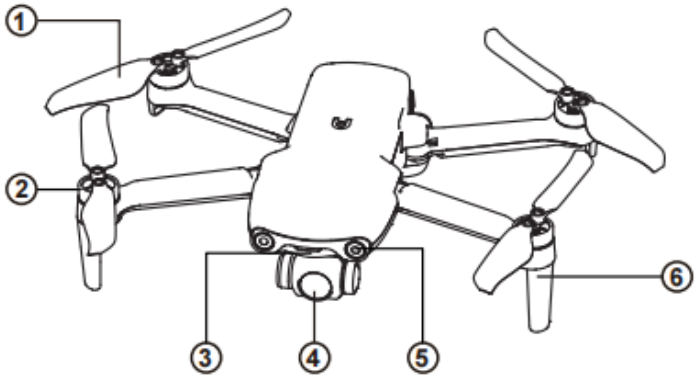

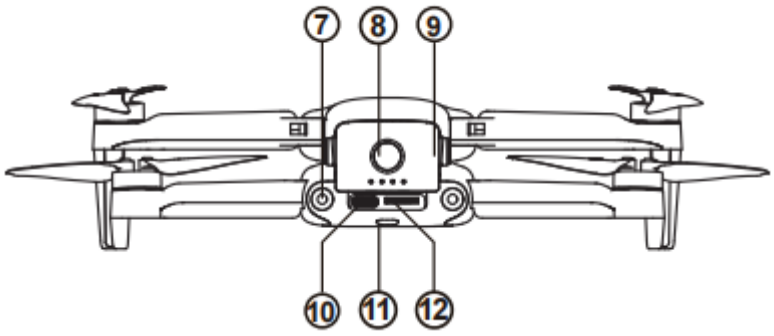

①Propeller
② Motor
③ Front LED indicator
④ PTZ camera
⑤ Forward visual system
⑥ Antenna
⑦ Rear vision system
⑧ Power button
⑨ Aircraft battery
⑩ USB-C port
⑪Rear LED indicator
⑫SD card slot
⑬Air outlet
⑭Ultrasonic sensor
⑮Downward vision system
⑯Air inlet

2.2 Flight indicator

The head and tail of the aircraft are equipped with an LED indicator, and the meaning of each status indicator is shown in the table below.

Meaning of flight indicator status		
Head light	Tail light	Meaning
Normal status		
White lamp breathing	Show flashing of green light	The aircraft is in GPS status
Breathing of white light	Quick flashing of yellow light	The aircraft is pairing with the remote control unit
Compass calibration		
Breathing of white light	Alternate slow flashing of red/green lights	Start compass calibration
Breathing of white light	Quick flashing of red light	Calibration failed

Breathing of white light	Show flashing of green light	Calibration succeeded
Warning		
Normally on of red light	Quick flashing of yellow light	No connection between the aircraft and the remote control unit
Breathing of white light	slow flashing of red light	Low power warning
Breathing of white light	Quick flashing of red light	Severe low power alarm

2.3 Aircraft battery

The battery for EVO Nano is 2250mAh and has the rated voltage of 7.7V and charging and discharging management functions. The battery needs to use the officially provided dedicated adapter and cable for charging.

① Disconnect button
② Battery level indicator
③ Power button

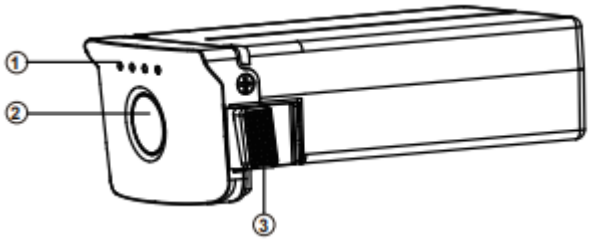

⚠ **Warning**

- Only the battery and charger provided by Autel Robotics are allowed. Neither modify battery and its charger nor use replace them with the third party equipment.
- The electrolyte in the battery has strong corrosion. If the electrolyte accidentally touches your eye or skin, immediately rinse with clear water and timely see a doctor.

2.3.1 Battery use

1. Turn on battery

The battery shall be turned off before it is installed. After installation, long press the power button for 3 seconds. The battery level indicator will indicate the current battery level.

2. Turn off battery

Long press the power button for 3 seconds to turn off battery. If the battery has been installed on aircraft, LED 1 and LED 4 will flash for five times to remind the shutting down. After all **battery level indicators** are turned off, take the battery out of the aircraft.

3. Check battery level

When the battery is turned off, press the power button for 1 second and then release it quickly to check the battery level. LED will indicate the current battery level, as shown below.

Battery level indicator status (non-charging status)			
0%~12%	13%~25%	26%~37%	38%~50%
51%~62%	63%~75%	76%~87%	88%~100%
● - Green is normally on	◎ - Green is flashing	○ - Off	

LED warning description				
LED 1	**LED 2**	**LED 3**	**LED 4**	**Warning description**
○	◎	○	○	The charging temperature is too high or too low.
○	○	◎	○	The charging current is high enough to cause short circuit.
○	○	○	◎	There is overcurrent, overload or short circuit problem in the case of discharging.
◎ - Indicator is flashing			○ - Off	

4. Install aircraft battery

1. Turn off the battery power switch before installing battery.
2. Insert the battery compartment and push it to the bottom, as shown below. There will be clicking sound when the battery is installed in place.

5. Disassemble aircraft battery

1. Turn off the aircraft battery power switch before taking out the battery.
2. Press the buckles at two sides of battery and slowly take out the battery.

6. Charge aircraft battery

The aircraft battery and remote controller can use the charger and cable provided for charging. Before each use, the battery shall be fully charged.

1）Connect the USB charger to the AC power supply (100-240 V, 50/60 Hz).
2）Connect the aircraft to the USB charger.
3）In the charging state, the aircraft battery power indicator will flash repeatedly and indicate the current power.
4) When all battery level indicators are off, this shows that the intelligent aircraft battery has been fully charged. Please take off the charger to complete charging.

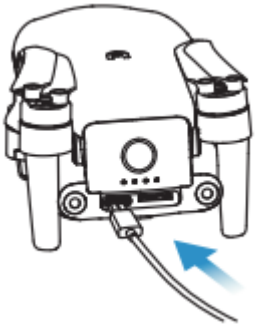

2.3.2 Battery function

The following functions can protect and prolong the battery service life.
1) Self-discharge protection for storage: if the battery is stored in high temperature environment or it is not used for 6 days and the battery level is high, the self-discharge protection will be activated. The battery will automatically discharge to a safe level, and this discharging process takes 2~3 days. In this period, it is normal that the battery may be slightly hot.
2) Low battery protection: in the case of low battery level, the battery will automatically enter sleep mode to avoid damage. Under this mode, there will be no reaction when pressing the power button. To wake up the battery, it is allowed to connect it with charger.
3) Charging temperature protection: the battery will stop charging in the case of charging temperature lower than 5 ℃ (41 ℉) or higher than 45 ℃ (113 ℉).
4) Overcurrent protection: the large charging current will seriously damage the battery, so the battery will stop charging in the case of excessive charging current.
5) Overcharge protection: the battery will automatically stop charging after it is fully charged.
6) Balanced protection: each battery unit shall maintain voltage balance to avoid overcharge or overdischarge.
7) Overdischarge protection: the battery will automatically disconnect the power output function when it is not used and completes the self-discharge period. This function is disabled in flight.
8) Short-circuit protection: the power supply will be disconnected once the short circuit is detected.
9) Power-down mode: the battery will turn off if there is no operation within 30 minutes.
10) Communication: during use, the aircraft will be continuously synchronous with battery to provide the real-time information, including voltage, capacity, current, and temperature.
11) Low power consumption mode: the battery will enter the low power consumption mode when the battery level is lower than about 8% to reduce the own power consumption. To recover the battery from the low power consumption mode, it shall be activated by charger.

2.3.3 Precautions

1. Use

- Please be sure to turn off the aircraft power before installing or disassembling aircraft battery.
- It is only allowed to use the battery and charger sold or authorized by Autel Robotics for EVO Nano series. The use of any unapproved battery or charger may cause fire, explosion, leakage or other dangers. Autel Robotics will assume no responsibility for any consequence of using the battery or charger of third party.
- Be sure to charge the battery fully before each flight. If the aircraft enters the low battery alarm mode, it is necessary to land the aircraft, stop flying, replace or charge battery as soon as possible.
- Never decompose, scratch, extrude, bend, pierce, cut, distort or damage the battery in other forms. Otherwise the fire, explosion, leakage or other dangers may be caused.
- Once the battery is found with bulge, smoke, leakage or any damage, it is necessary to stop use or charging immediately and soak the battery into a vessel containing saline water.
- Please use the battery at the suitable temperature (-10℃～40℃). The use at high or low temperature will affect the battery life. Too high temperature may cause fire or spontaneous combustion; too low temperature may cause the permanent damage of battery.
- When the battery is at low temperature lower than 10℃, it can be inserted into the aircraft for warming; the flight is allowed after the battery is fully warmed up. It is optimal to warm up to 20℃ above.
- Due to the battery output power limitation under the low temperature environment, the wind resistance of aircraft will reduce and its flight performance will degrade. Please operate with care.
- When the battery is used in low temperature environment (0~5℃), the battery shall be full. The discharge capacity of battery will reduce when it operates in low temperature environment, so first turn on the aircraft to warm up the battery.
- Never use the battery in strong static or electromagnetic environment.
- Never expose the battery to open fire, explosion or other danger.
- Never place the battery in microwave oven or pressure cooker.
- If the aircraft falls into water, the battery shall be taken out immediately after it is recovered. Place the battery in an open space and keep a safe distance till that the battery is fully dried. Stop the use of the battery, and contact the customer service center for replacement.

2. Charging

- At most 90 minutes are required to fully charge the aircraft battery, but the charging time is related to the remaining battery level.
- Never use the damaged battery charger.
- When the charger is not used, disconnect it from the aircraft battery and power supply.
- The charging is allowed only after the battery is cooled to room temperature. If the battery is connected with the charger immediately after flight, the overtemperature protection function may be activated to stop battery charging till that the battery is fully cool.
- Do not turn on the aircraft during charging. The charging is not supported when the aircraft is on.
- The allowable battery charging temperature is 5℃~45℃. If the battery cell temperature is not

within this range, the battery management system will be prohibited from charging. The optimal charging temperature range is 22℃~28℃. The charging in this range can prolong the battery life.

- For EVO Nano series, the multiple chargers are optional to charge multiple batteries at the same time. You can access to Autel Robotics Online Mall to purchase accessories.
- The battery shall be recharged once every about three months to maintain its activity.
- Autel Robotics will assume no responsibility for any consequence due to the use of non-official standard charger.

3. Storage and transportation

- The battery shall be protected from close contact with water source or heat source when storage. The battery shall be stored in a dry and well-ventilated place in room temperature (ideal temperature of 22 ℃~28 ℃ (72 ℉~ 82 ℉)).
- The battery shall be kept out of the reach of children and pets.
- Never place the battery in direct sunlight or near sharp object, water, metal or reactive chemical.
- The storage of the battery in extreme temperature will shorten the battery service life. If the battery is not used for 1 day above, it shall be stored in -10 ℃ (14 ℉)~30 ℃(86 ℉). Otherwise, the battery damage or failure may be caused.
- If the battery is not used for long, the battery service life will be shortened. Never transport the damaged battery. Once the battery needs to be transported, it shall be discharged to 20~30%.

4. Disposal

- The battery must be thoroughly discharged before it is discarded in a designated battery recycling bin.
- The battery is a dangerous chemical, so it is forbidden to be discarded in ordinary dustbin. For more details, please abide by the local recycling and disposal laws and regulations.

2.4 Gimbal and camera

2.4.1 Gimbal overview

The aircraft is equipped with a high-precision 3-axis PTZ, which can keep the camera stable during aircraft flight, so as to ensure image stability and definition. In order to work properly, the PTZ temperature must be between -10 ℃ and 50 ℃ (14 ℉ to 122 ℉). You can use the PTZ pitch angle dial of the remote controller or Autel SkyTM App to arbitrarily adjust the pitch angle of PTZ within the range of -90 ºto 0 º.

PTZ of EVO Nano

Support 4K camera with 1/2-inch CMOS sensor

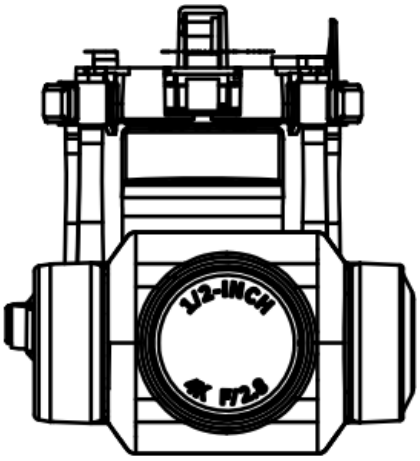

PTZ of EVO Nano+
Support 4K camera with 1/1.28 inch CMOS sensor

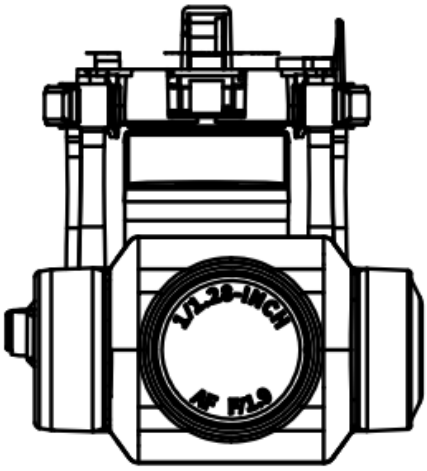

The gimbal includes two working modes:

Stabilization mode

The rolling axis remains horizontal while the pitching axis remains the user-defined angle. This mode is used to capture stable image and video.

FPV mode

The rolling axis remains consistent with the rolling direction of the aircraft while the pitching axis remains the user-defined angle. This mode is used for first-person perspective.

Important

- EVO Nano series camera gimbal is fixed by one gimbal protective cover that can protect the gimbal from accidental rotation or damage during storage.
- **Please be sure to take down the gimbal protective cover before startup. Otherwise the gimbal camera and circuit may be damaged.**
- When turning on the aircraft power switch, the gimbal will rotate automatically to carry out self-test and calibration. Please ensure that there is no object that may hinder the gimbal motion around the gimbal.

- The gimbal contains precision components. In the case of collision or damage, the precision components may be damaged to cause performance reduction of the gimbal. Please protect the gimbal camera from physical damage.
- The gimbal shall be kept clean and avoided touching sand, stone and other objects, otherwise the gimbal motion may be hindered, affecting its performance.
- Never add any object on the camera gimbal, otherwise this may affect the gimbal performance and even cause the motor burnout.
- Before flight, ensure that there is no any sticker or foreign object on the gimbal, and place the aircraft on the flat and open ground. Never collide with the gimbal after power on.
- If any ground object collides with the gimbal or the gimbal is impacted by an excessive external force (such as being collided or broken) when it is placed on the rugged ground or grassland, the gimbal motor may become abnormal.
- The flight in heavy fog or cloud may cause the condensation of gimbal, resulting in temporary fault. In this case, the gimbal can recover normal after drying.

2.4.2 Camera overview

EVO Nano camera is equipped with 1/2-inch sensor, with 48 million effective pixels, and the lens aperture of F2.8. The focus ranges from 1m to infinity. It can record 4K HD video.
EVO Nano+ camera is equipped with a 1/1.28 inch sensor. The camera supports up to 50 million still photos, and the lens aperture is F1.9. The focus ranges from 1m to infinity. It can record up to 4K HD video.

These two camera modules can support multiple shooting modes, including:

- Single
- Burst
- Auto exposure bracketing (AEB)
- Timer
- HDR imaging

The camera can save photos in DNG or JPG format and record videos in MOV or MP4 format. The image and video can be saved in Micro SD card. Real-time images are displayed on the Autel Sky™ App with up to 2.7K resolution and 30 frame fluency.

Important

- Please use and store the camera within the nominal temperature and humidity range to maintain good performance of camera lens.
- Any dirt or dust on the lens surface is recommended to be removed by special lens cleaning tool, in order to avoid damaging lens or affecting image quality.
- Ensure that the camera is not blocked or covered, otherwise high temperature may cause the camera damage and even get you or others a burn.

2.4.3 Use Micro SD card

EVO Nano series is provided with Micro SD card slot for storage space extension.

Before the aircraft is turned on, first insert one Micro SD card in a port, as shown below. EVO Nano series can support the SD card with the maximum storage capacity of 256GB. If you want to shoot a high-definition video, you are recommended to use the Class 10 or UHS-3 Micro SD card.

(Illustration, insert SD card into the aircraft card slot)

Without Micro SD card, it is also allowed to take photo or record video but the image will be directly stored in the mobile device.

Warning

- Never insert or pull Micro SD card when the aircraft is on. If the Micro SD card is inserted or pulled during video recording or the battery is removed when power on, the Micro SD card may be damaged to cause data loss.
- Please turn off the aircraft correctly, otherwise the camera parameters would not be saved and the video being recorded would be damaged. Autel Robotics will assume no responsibility for the loss caused by failure to read video or photo.
- It is recommended to limit the single recording time within 30 minutes to ensure camera system stability.
- Please check camera parameter setting and ensure accurate parameters before shooting.
- Before the important video is shot, please conduct the several test shootings to ensure that the equipment is normal.
- The photo or video stored in Micro SD card can be downloaded through Autel Sky App only when the aircraft is turned on.

2.5 Propeller

Warning

- Please turn off the aircraft power switch before installing or dismantling the propeller.

Important

- It is necessary to wear protective gloves when installing or dismantling the propeller.

2.5.1 Install propeller

1. Confirm that the aircraft has been turned off.
2. Select the propeller matching the boom.
3. Align the round hole of the screw propeller with the screw hole of the motor and lock the screw.

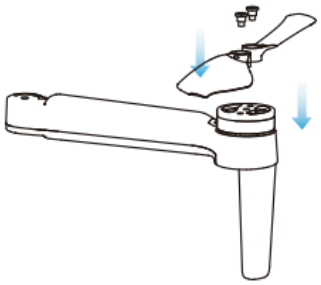

Propeller	Dot mark	Without dot mark
Schematic diagram		
Matching arm	Install to boom with dot	Install on the arm without dots

2.5.2 Disassemble propeller

1. Confirm that the aircraft is closed.
2. Loosen the screw to remove the screw propeller airscrew.

Important

- Check to confirm that each propeller has been installed firmly before flight.
- Do not use the damaged propeller for flight.
- It is forbidden to touch the rotating propeller or motor.
- It is always necessary to take down the propeller before motor test.
- Please use the special propeller for Nano series provided by Autel Robotics. Do not use the propellers of different models.
- In the case of blade replacement, use the two blades in the same package. Never mix with the blades in other package.
- Never modify the physical structure of motor without approval.
- Never cover the motor air outlet or the air outlet on the aircraft shell.

2.6 Intelligent flight control system

EVO Nano series is to conduct stable and convenient flight control by its built-in intelligent flight control system. This system can support multiple advanced functions, including course reversal, fail-safe, positioning system, etc. The working description of each module is as shown in the table below.

Intelligent flight control system module	
Module	**Description**
IMU	Use one 3-axis gyroscope and 3-axis accelerometer to measure acceleration and angular speed. When the flight power switch is turned on, carry out the automatic IMU calibration.
Compass	Measure geomagnetic field and provide course reference of aircraft.
GNSS receiver	Receive the GPS signal to determine longitude, latitude and altitude.
Barometer	Measure atmospheric pressure to determine the altitude of aircraft.

Ultrasonic sensor	Measure the distance between aircraft and ground.
Binocular vision system	Support the forward, backward and downward binocular vision.

2.6.1 Flight mode

EVO Nano series supports the standard, sport and smooth modes which can be switched by APP.

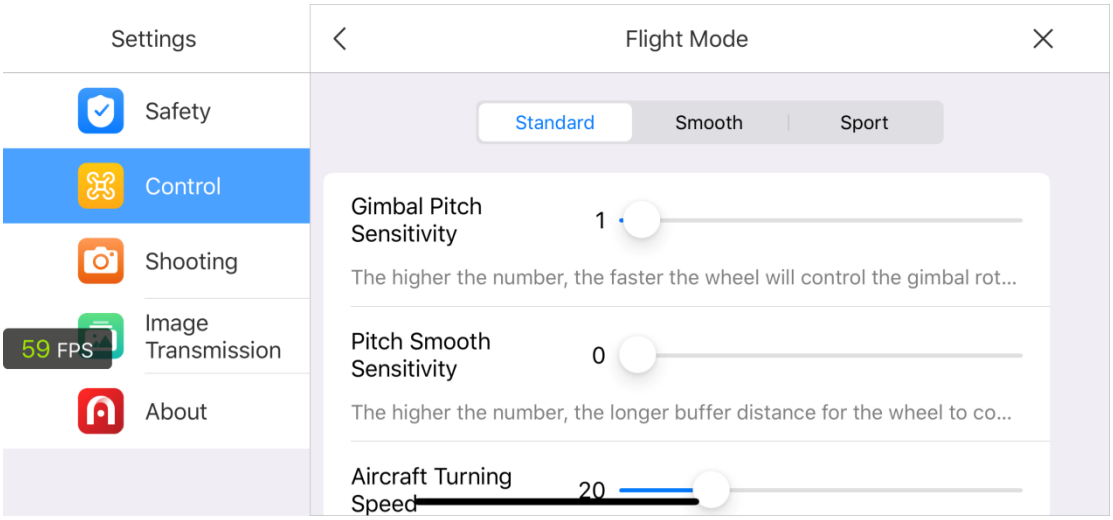

1. Standard mode

Use the GPS module and downward vision system to realize the accurate hovering, steady flight and quick shot functions of aircraft. In the case of good GPS signal, the GPS will be used for precise positioning; in the case of poor GPS signal, the vision system will be used for positioning when the light conditions are as required. If the light conditions meet the requirements of vision system, the maximum flight attitude angle will be 25°, and the maximum flight speed will be 10m/s.

2. Sport mode

Use the GPS module and downward vision system to realize accurate hovering. After the aircraft control sensibility is adjusted, the maximum flight speed will rise to 15m/s, the maximum rising speed will be 6m/s, and the maximum descending speed will be 4m/s.

3. Smooth mode

Limit the flight speed based on standard mode, namely, the maximum flight speed as 5m/s, the maximum rising speed as 3m/s and the maximum descending speed as 2m/s, to make the aircraft more stable during shooting.

The aircraft will enter the attitude (ATTI) mode when the GPS signal is poor, the compass is disturbed and the vision positioning conditions fail to be met. Under the ATTI mode, the aircraft will drift horizontally, and the intelligent flight function and the return function will not be available. Therefore, the aircraft under this mode cannot realize spot hover and automatic brake, so it shall be landed on a safe position as soon as possible to avoid the occurrence of accident. User shall try to avoid the flight in poor GPS signal, non-ideal light condition and narrow space, in

order to avoid the flight accident due to the ATTI mode.

Important

- In the case of flight under the sport mode, the flight speed of the aircraft will increase largely compared with the normal mode, thus resulting in the substantial increase in braking distance. In the case of flight without wind, user shall reserve at least 30m of braking distance to ensure flight safety.
- In the case of flight under the sport mode, the descending speed of the aircraft will also increase largely; in the case of flight without wind, user shall reserve at least 10m of braking distance to ensure flight safety.
- In the case of flight under the sport mode, the attitude control sensibility of the aircraft will increase largely compared with the normal mode. Specifically, any operation in a small extent on the remote controller will cause a substantial flight action of the aircraft. In the actual flight, user shall reserve the enough flight space to ensure flight safety.
- After starting shooting under the standard mode or the smooth mode, in order to ensure the shooting stability, the flight speed will be limited when the gimbal pitch angle is close to -90° or 0°. In the case of high wind, the limitation will be relieved to improve the wind resistance of the aircraft. At this time, the gimbal shake may occur.

2.6.2 Intelligent flight features

1. Auto return

The return function is enabled only when there is good GPS signal. To want to enable the return function manually, long press the return button on the remote controller or click the return icon in Autel Sky App. Upon receipt of the instruction, the aircraft will automatically return and land on the preset return point.

Important

- The return height (relative to take-off point) is 25m by default. If you enable the function when your aircraft is lower than the altitude, the aircraft will rise to 25m and then return.
- If you enable the function within a radius of 10m around the return point, the aircraft will automatically land on the spot.
- EVO Nano series can use its forward vision system to detect and avoid the obstacles on the flight course. If the forward vision system is not enabled during return, the aircraft will not automatically avoid the obstacles. Press the pause button on the remote controller or click the pause icon in Autel Sky App to quit the auto return mode, and recover the control on the aircraft.

2. Fail-safe

The fail-safe function is to help EVO Nano series UAVs to return automatically or land at its current position when necessary. The fail-safe will be activated in the following situations:

1) Communication outage

If the communication between the aircraft and the remote controller interrupts for 3s, the fail-safe

function will be activated.
If there is available GPS signal when the fail-safe function is activated, the aircraft will enable the auto return function. Otherwise the aircraft will land on the spot. After communication restoration, you can still press the pause button or click the pause icon in Autel Sky App to recover the control on the aircraft.

2) Low battery of aircraft

In any of the following low battery situations, the fail-safe will be activated.
A. The aircraft will continuously calculate the battery level required to the return point. When the battery level reaches the maximum level required to the return point, Autel Sky™ App will show a notification. The fail-safe will be activated to start the return process. Similarly, you can also press the pause button or click the pause icon in Autel Sky App to recover the control on the aircraft.
B. When the aircraft battery level reaches the set threshold (25% by default), you will receive one low battery alarm, and the fail-safe will be activated to start the auto return of aircraft. If you recover the control on your aircraft, when the battery level reaches 15%, you will receive one serious low battery alarm, and the aircraft will automatically land on the spot. In emergency, you can press the pause button or click the pause icon in Autel Sky App to pause landing, and manually make the aircraft fly to the nearest safe landing point.

Remark

- When the aircraft battery level reaches 25% (low battery alarm), if the horizontal distance between the aircraft and the return point is less than 50m, the aircraft will not carry out the auto return process.
- If there is no available GPS in the case of low battery alarm, the aircraft will not carry out the auto return process. The aircraft will enter the ATTI mode and continue to be controlled. When the battery level reaches 15% (serious low battery alarm), the aircraft will land automatically.

3. Landing features

1) Landing protection

When the aircraft arrives above the return point, the landing protection function will be activated to detect the ground environment. If the ground is flat, the aircraft will land automatically. Otherwise it will hover on the spot to wait for the next instruction.

2) Precise landing

When the precise landing function is activated, the aircraft will scan and match the topographic features. If the current topography is matched with that at the take-off point, it will land as close to the take-off point.

Important

- The aircraft will record the take-off point as the default return point. The precise landing can take effect only when the return point is not refreshed during flight.
- Select an open and well-lit area (such as grass lawn) as the take-off point.
- When the aircraft is ready for precise landing, it is necessary to ensure that the take-off

environment has no change.

2.6.3 Compass calibration

The compass has been calibrated in factory, with no need for calibration by user normally. If the compass indicates the error information, or the flight direction of the aircraft is not consistent with the control input, or the flight place is far from the calibrated distance, please carry out the following calibration procedure.

⚠ **Warning**

- The compass is very sensitive to the electromagnetic interference that may cause the compass error and the flight quality reduction. If the company still fails to be used after calibration, it is allowed to move the aircraft to other places for recalibration.

In the case of compass calibration, please pay attention to the following points:

- Select an open outdoor area.
- Keep away from the magnetic interference source, such as magnet or concrete reinforcement. The calibration result may also be affected if close to a large structure.
- Keep away from the underground and overhead power lines.
- Never carry the ferromagnetic materials (such as key or magnetic ornaments) with you.
- Keep away from all electronic devices (such as mobile device) that may interfere with the calibration.

Calibration procedure:

1. Open Autel Sky App, enter the menu setting interface, choose the “safety” option, click the “compass calibration” to the calibration interface, and then click the “start” key.

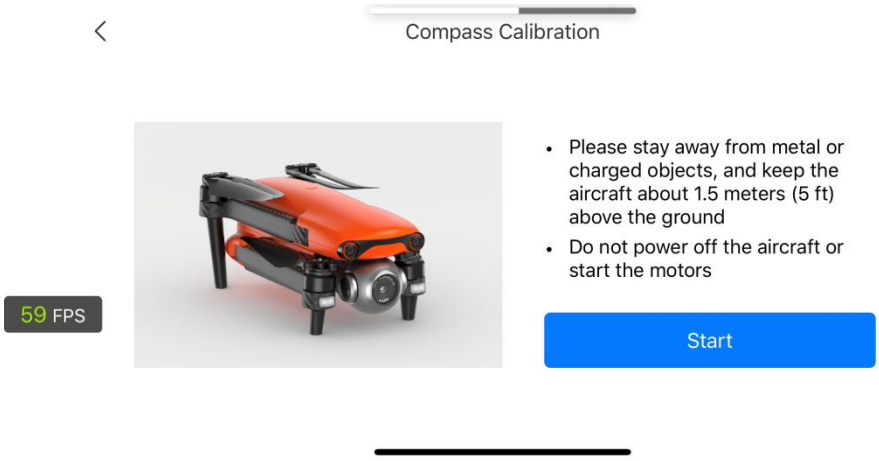

2. Hold the aircraft and make it horizontal, and then rotate the aircraft till the rear LED indicator of the aircraft is normally on green.
3. Hold the aircraft and make it vertical with the head downwards, and then rotate the aircraft till the rear LED indicator of the aircraft is normally on green.
4. Hold the aircraft with the head forwards and the side downwards, and then rotate the aircraft till the rear LED indicator of the aircraft is normally on green.

Remark

- If the calibration fails, the indicator light behind the aircraft will flash red, and the APP will also prompt that the calibration is failed. Repeat above steps.
- Please keep away from the metal or electric object, and maintain the aircraft at about 1.5m above the ground.

2.7 Binocular vision system

The front, rear and downward binocular vision perception system of EVO Nano series uses image data to calculate the distance between the aircraft and potential obstacles. Once an obstacle is detected, the system will stop the aircraft. An ultrasonic sensor is also installed under the aircraft, which can provide the altitude reference of the aircraft to the ground and cooperate with the vision system to calculate the aircraft position information.

Binocular vision system			
System	**Position on aircraft**	**Sensing range of obstacle**	**Viewing angle**
Forward	The front of the aircraft	0.5 ~ 16 m	Horizontal<40 °, vertical<30 °
Backward	The tail of the aircraft	0.5 ~ 18 m	Horizontal< 40 °, vertical< 30 °
Downward	The lower part of the aircraft	0.5 ~ 20 m	Horizontal< 40 °, vertical< 30 °

Remark

- The vision system has dead zone outside its covering range. It is necessary to pay attention to the ambient environment and App notice during flight to ensure safety.
- Do not operate the aircraft in a complex environment where there is insufficient light, small object (such as twig, line, net), moving object, transparent surface (such as window) or reflected surface (such as mirror).
- In the case of flight with car or other vehicles, please select a field or closed road for driving. Never use it on highway.

2.7.1 Precautions

1. Ensure that the aircraft is in GPS or vision positioning mode.
2. The aircraft shall take off when the flight LED indicator flashes green slowly or red twice.
3. When the GPS signal is weak or fails to meet the vision positioning requirement, it is necessary to be extremely careful.
4. The vision system and ultrasonic system are affected by the surface brightness and texture below the aircraft. Avoid flying above the following surfaces:

- Surface of pure color (such as pure black, pure white).
- Surface with high reflection or inverted reflection (such as ice surface).
- Water surface or transparent surface.
- Surface with frequently changing light.

- Particularly dark or bright object surface.
- Moving surface (such as road with heavy traffic).
- Sound absorbing surface (such as thick carpet).
- Surface with sparse texture (such as electric pole, pipeline, etc.).
- Surface composed of highly repetitive pattern (such as tile).
- Tiny obstacle (such as tree branch, electric wire, etc.).

5. Avoid flying in rainy and foggy weather or other scenes where the visibility lower than 100m.

6. Before flight check the vision system surface to ensure that the binocular camera lens and sensor are clean and not covered.

- Remove the surface film, sticker and other covers.
- Clean of water drop, fingerprint, dirt, etc. (by non-dust cloth instead of alcohol and other organic solvents).
- Return to repair if the surface has shedding, crack, scratch or wear, etc.

7. In order to avoid disturbing the ultrasonic system, do not use 40 kHz ultrasonic device, such as ultrasonic range finder, fault detector, cleaner or welding machine.

Chapter 3 Remote controller

EVO Nano series adopts the new generation of Autel Skylink image transmission technology of Autel Robotics, has strong anti-interference capability and supports the double-emission and double-receiving of 2.4GHz, 5.8GHz and 5.2GHz. It can complete the control and setting of aircraft and camera within at most 10km communication distance (FCC, no interference, no blocking) and can display a high-definition picture in mobile device in a real-time manner by Autel Sky App. The telescopic mobile device support can stably support the mobile device, and the built-in battery of remote controller is 3930mAh that can work for about 3.5h.

With the system integration of camera, video decoding algorithm and wireless link by Autel SkyLink, the image transmission delay can be reduced to about 200ms to further improve the image transmission performance.

3.1 Components description

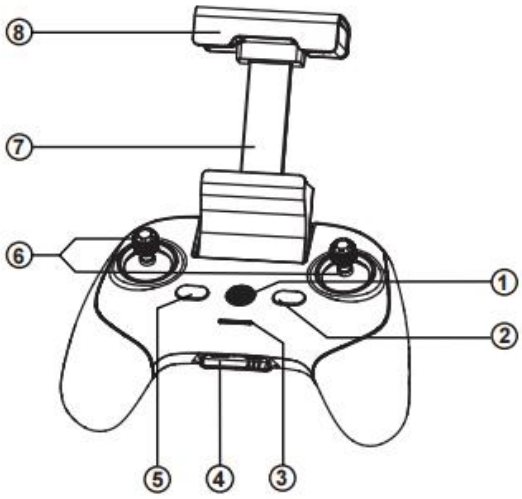

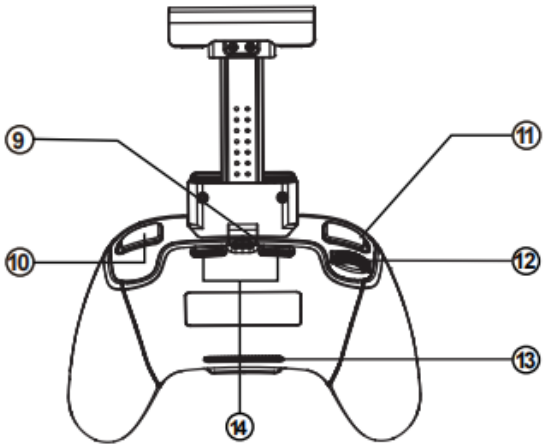

① Power button	Long press the button for 2s to turn on/off the remote controller.
② Pause button	Indicate the suspension of the autonomous flight of aircraft and hovering on the spot or the recovery of the autonomous flight.
③ Power indicator	Indicate the current battery level of remote controller.
④ Charging interface	It is used for charging the remote controller and adjusting parameters
⑤ Return button	Command the aircraft to return waypoint.
⑥Command stick	Control the direction and motion of aircraft.
⑦ Mobile device support	It is used to fix the mobile device with the adjustable viewing angle.
⑧ Antenna	The frequency for communication with aircraft is 2.4GHz / 5.8GHz / 5.2GHz.
⑨ Remote controller interface	It is used to connect the mobile device.
⑩Photo/video button	Start or stop taking photo/recording video.
⑪User-defined button	Use Autel Sky™ to set functions.
⑫Gimbal pitching control thumbwheel	Control the pitch angle of camera gimbal.
⑬Air inlet	It is used for remote controller cooling.
⑭ Air outlet	It is used for remote controller cooling.

3.2 Use remote controller

3.2.1 Turn on/off remote controller

1. Startup

Press the power button for 2s till that a short beep sound appears.

2. Shutdown

Press the power button for 2s till that a short beep sound appears.

Important

- Be sure to turn on the remote controller before the aircraft power supply is connected.
- Be sure to turn off the aircraft power switch before turning off the remote controller.

3.2.2 Charge remote controller

1. Short press the power button once to check the current battery level of the remote controller, and charge the remove controller if low battery level.

2. Connect the special charging cable to the USB-C interface at the bottom of the remote controller. Full charge takes 2h.

3. In the case of charging, the power indicator of the remote controller will enter the mode of waterfall light. After completion of charging, the four indicators will be normally on green. At that

time, you will hear two beep sounds.
4. Disconnect the charger from the remote controller after completion of charging.

3.2.3 Control camera

1. Photo/video button: short press the button to take photo or start/stop recording video.
2. Gimbal pitch control thumbwheel: toggle it to control the pitch angle of gimbal.

3.2.4 Remotely control aircraft

The remote controller includes Mode 1, Mode 2 and Mode 3 based on operation habit and can also be self-defined in Autel Sky App. The beginner is recommended to use the Mode 2 as control mode.

Mode 1

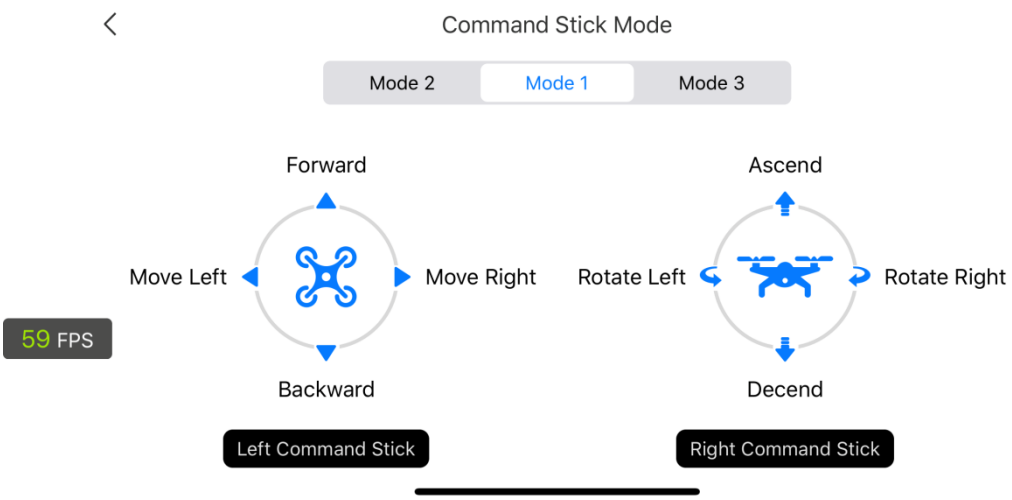

Mode 2

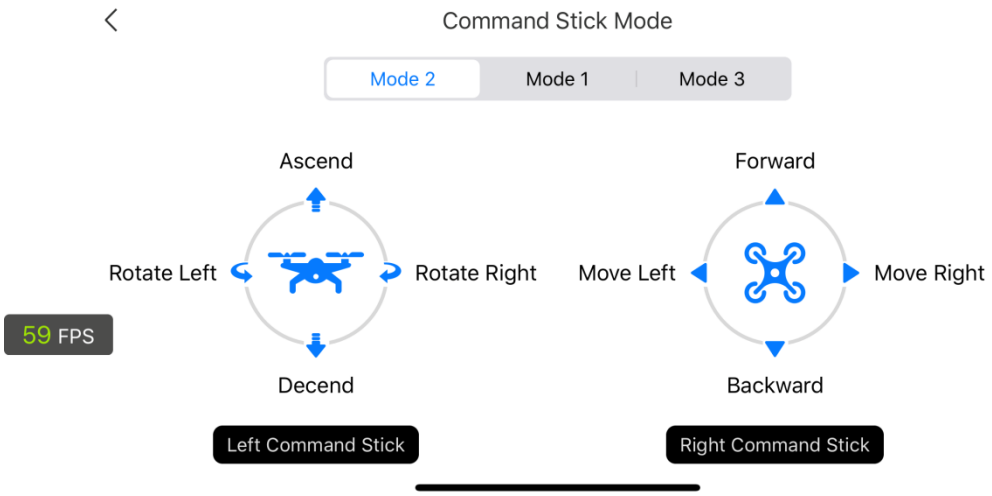

Mode 3

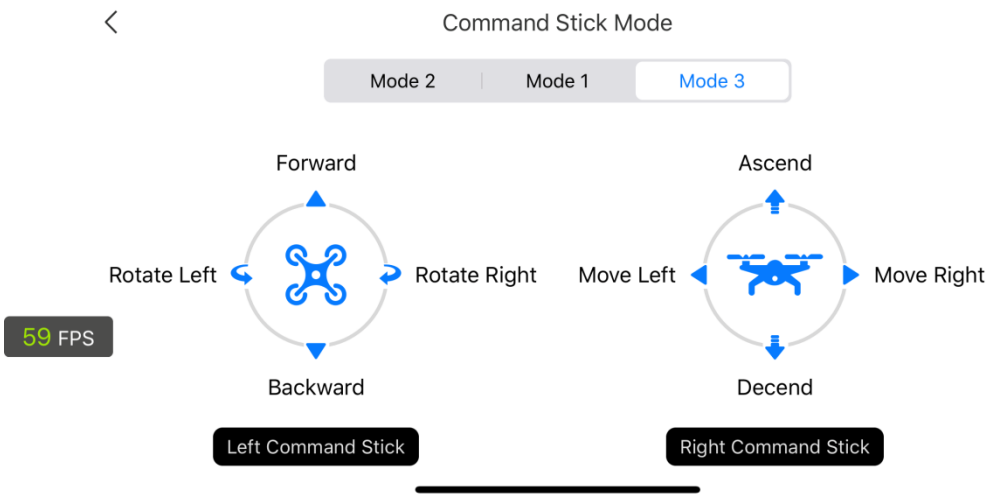

Important

- The control mode of the remote controller is American manipulator by default.

3.3 Remote controller calibration

If the command stick is abnormal (the remote controller falls on the ground or the flight direction of the aircraft is not consistent with its operation direction), the remote controller is recommended to be calibration. You can calibrate the remote controller by using Autel Sky™ App.

1. Please turn off the aircraft power supply before operation.
2. Open Autel Sky App, enter the setting interface, click the “control” option, click the “remote controller calibration”, and then click the “start” key.

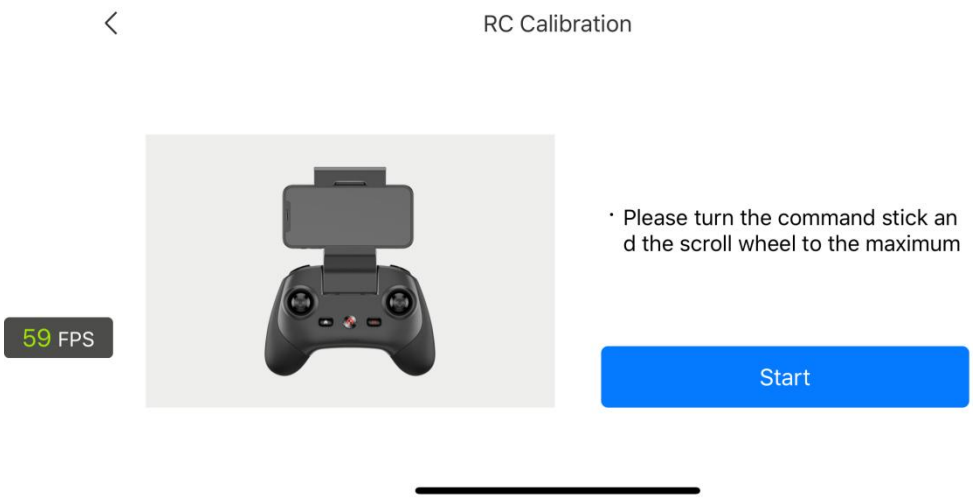

3. Move the left and right command sticks and thumbwheel in turn to their maximum extent in the

direction of the arrow on App. When the calibration of a direction is completed, the arrow in the direction will become blue.

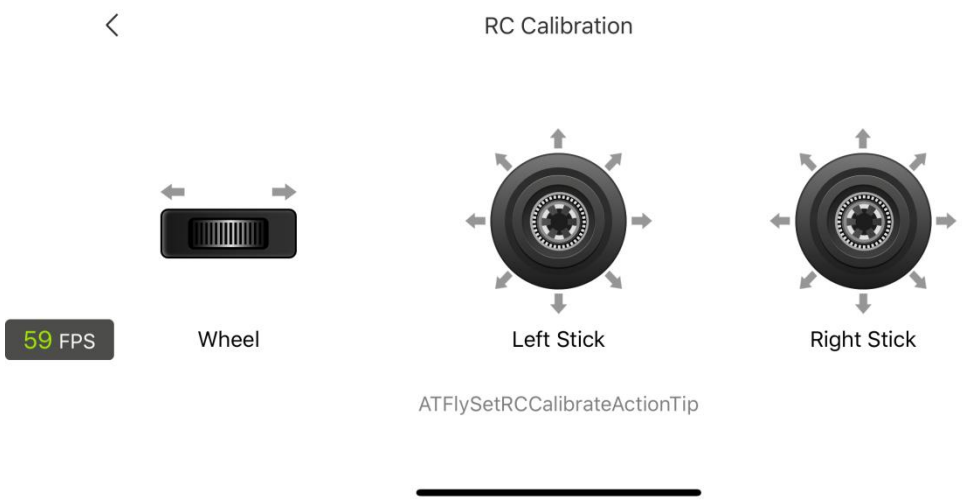

3.4 Remote controller pairing

The remote controller and the aircraft have been paired in factory. If the remote controller needs to be paired again after replacement, please carry out the following operations:

1. Turn on your remote controller and aircraft.
2. Connect your remote controller and mobile phone, operate Autel Sky App, click “connect device”, and choose the aircraft to be connected to enter the pairing interface.

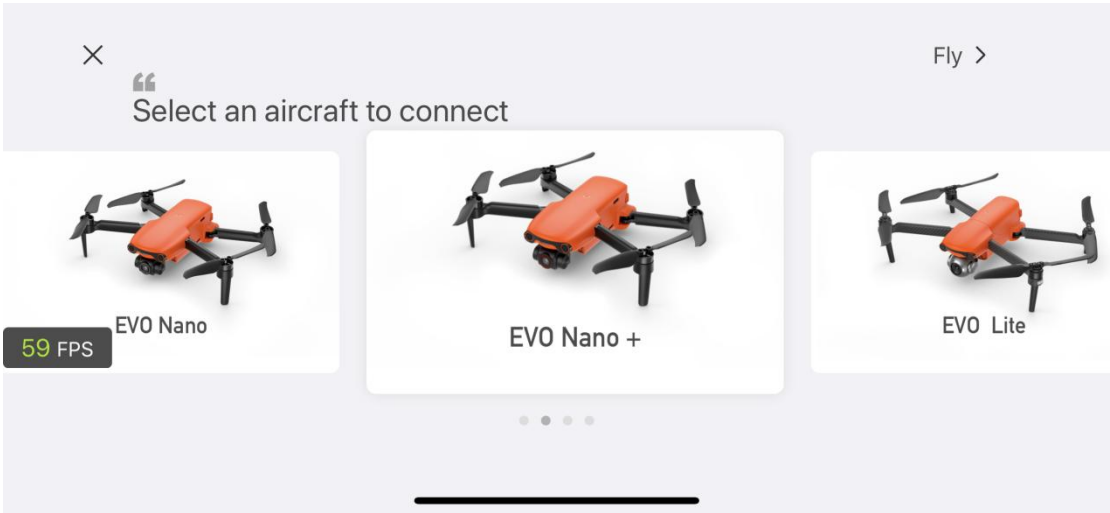

3. double click the aircraft battery. The LED at the tail of aircraft will flash quickly to start pairing. Click the pairing button on the app interface.
4. After successful pairing, the LED at the tail of aircraft will be on for 5s and then flash slowly, and app will return to the homepage automatically.

Important

- In the case of frequency pairing, the aircraft shall maintain within 0.5m from remote controller.
- If a new remote controller successfully pairs its frequency with the aircraft, then the old

remote controller will not be connected with the aircraft.

- If your mobile phone is disconnected from the remote controller in the case of pairing, please reconnect them within 60s.

3.5 Optimum communication range

When controlling the aircraft, it is necessary to timely adjust the orientation and direction between remote controller and aircraft. When the antenna plane directly faces the aircraft, the signal quality between the remote controller and the aircraft can achieve the optimal condition. It is necessary to maintain the aircraft within the best communication range when controlling the aircraft.

Chapter 4 Autel Sky App

Autel Sky App integrates flying, shooting, editing and sharing functions, with the built-in simple and beautiful interactive interface, straightaway flight teaching and powerful and usable new editor, to enable that the user can get a quick start and enjoy the aerial photography.

4.1 Interface introduction

4.1.1 Home page

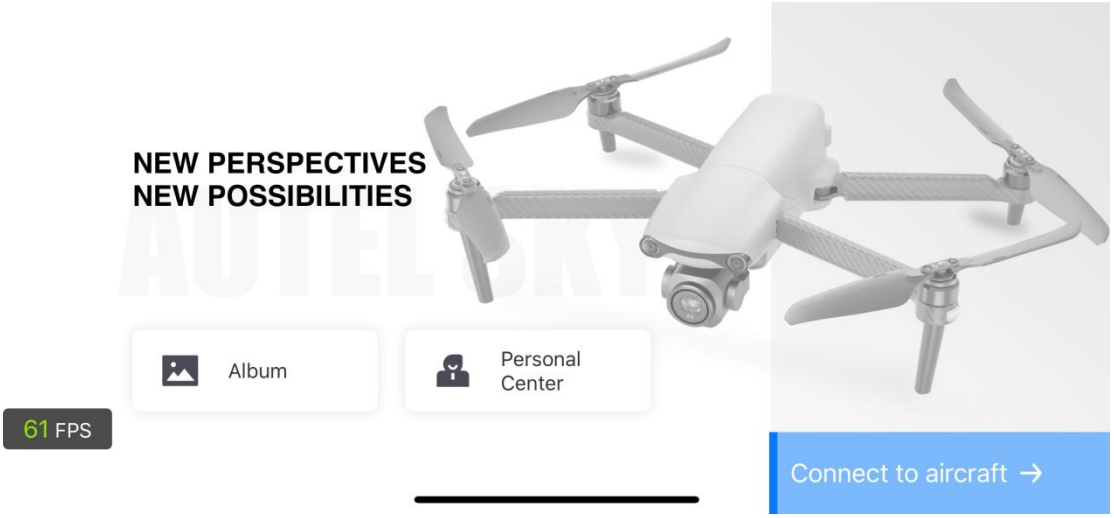

1. Album

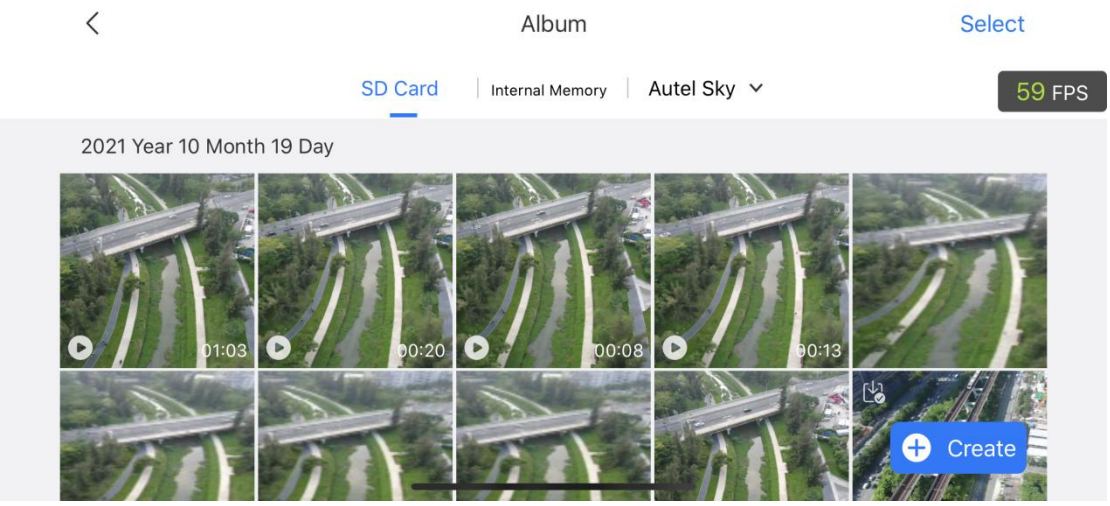

User can view and edit the album materials. The album includes SD card, internal storage, and device storage (Autel Sky) options. If the aircraft is not connected or the SD card is not inserted, the option of SD card will not be displayed but the device storage is a default option. The photo and video can be downloaded to local album.

Click the “Create” option to select the required materials for manual clipping or template use.

2. Learning center

Click the “Learning center” option to select the product type and view the product course, specification and flight safety.

3. Personal center

View the personal account, flight log, user terms and novice guide; autel care and devicemanagement; other settings include quick connection, clear cache, language, privacy and so on.

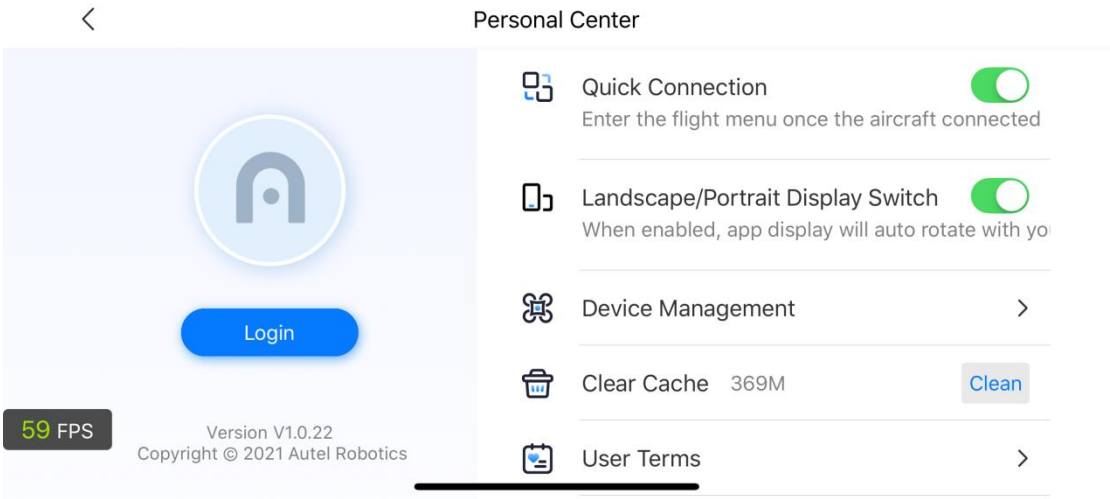

4.1.2 Camera interface

1. Home page

Click it to return to homepage.

2. Flight Mode

Standard mode: indicate the current flight mode.

3. Device status

Safe to fly: indicate the flight status and various warning information of aircraft. In the case of abnormal status, click it to view the detailed information.

4. Signal strength

Indicate the current image transmission signal strength between aircraft and remote controller.

5. Battery level

Indicate the current battery level percentage of aircraft.

6. Remaining flight time

Indicate the remaining flight time of aircraft under the current battery level.

7. Obstacle avoidance

Indicate whether the vision system has been turned on.

8. Settings

The Settings include safety, control, shooting, image transmission and about pages.

1) Safety

- Novice mode: with the novice mode activated, the speed, height and distance of aircraft will be limited.
- Home point: set the current position of operator and aircraft or self-define any position as home point.
- Flight restriction: set the maximum flight height, maximum distance and return height.
- Compass: view the compass condition and make calibration in the case of compass abnormality.
- IMU: view IMU condition and make calibration in the case of IMU abnormality.
- Battery information: view battery temperature, battery health value, and number of discharges; set low battery alarm, serious low battery alarm threshold; turn on/off battery protection mode (discharge every 3 days by default).
- Locate my drone: start the flashing light and tweeting mode to find the missing aircraft.
- Advanced settings:turn on/off the visual obstacle avoidance system, obstacle detection radar map and LED indicator of fuselage; set return/hover in the case of disappearance of the aircraft.

2) Control

- Unit: provide metric unit (km/h or m/h) or imperial unit (mph/h) for option.
- Landscape/portrait display switch: after it is activated, the image transmission page will display consistently with the state of landscape/portrait.
- Gimbal setting: set the working mode (stablized /FPV) and gimbal angle (center/downward); activate gimbal calibration and gimbal manual adjustment, and enable gimbal pitch adjustment

upwards by 30 °.
- Phone charging: after it is activated, the remote controller will charge mobile phone via connecting line.
- Command stick mode: set the command stick mode as mode 1, mode 2 or mode 3.

3) Shooting
- General setting: histogram, overexposure warning, grid, autosyncHD photos, picture in picture (PIP), defog and other settings.
- Live setting: the live switch is used to quickly open live broadcast from main screen and select live-broadcasting platform after it is activated.
- Storage setting: storage location, format, enable video buffering during video shooting, maximum video buffering capacity and other setting.

4) Image transmission
- Image transmission mode: HD, smooth, 2.7K.
- Frequency: 2.4GHz, 5.8GHz (including 5.2GHz), double frequency.

5) About
- View device, firmware, App and other information.

9. Prompt information
Click it to view the meanings of each option on the camera interface.

10. Shooting setting
Set the shooting parameters.

11. Shooting button
Click the button to trigger camera or start/stop recording video.

12. Album
Click it to enter the album page.

13. Shooting mode
Switch the shooting mode, including photo, video, quick shot, portrait, pano, night, track, time-lapse, pro.
Photo: it is used to set shooting mode (single/burst/AEB/timer), photo format, resolution, HDR, white balance, etc.
Video: it is used to set shooting while recording, video format, encode, frame rate, resolution, HDR, etc.
Quick shot:it is shot by four shooting modes, namely fade away, rocket, orbit and flick.
Portrait: it is available for taking photo or recording video, setting photo/video resolution and filter, and automatically adjusting the shooting distance of aircraft, etc.
Pano: landscape, portrait, wide-angle, spherical. Based on the selected panorama type, the aircraft will automatically take several photos and composite picture.

Night: in a low light environment, the night scene mode is used to obtain the best shooting effect, and the filter can be set.
Track: after an object is selected, the aircraft will follow the object for shooting. Provide three modes, quick track, dynamic track, and orbit track.
Timer: Two delay shooting modes, manual delay and orbit delay, are supported. The shooting time, number of shots, video duration after synthesis, maximum speed of aircraft, etc. can be set.
Pro:provide the shutter speed, sensitivity, exposure compensation and other shooting parameter settings.

14. Flight information
Indicate the current flight parameters.
H.S: horizontal speed of aircraft.
V.S: vertical speed of aircraft.
D: Horizontal distance between aircraft and home point.
H: Vertical distance between aircraft and home point.

15. Map
Click once to indicate the small map.

Click the small map again to switch the image transmission interface to large map.

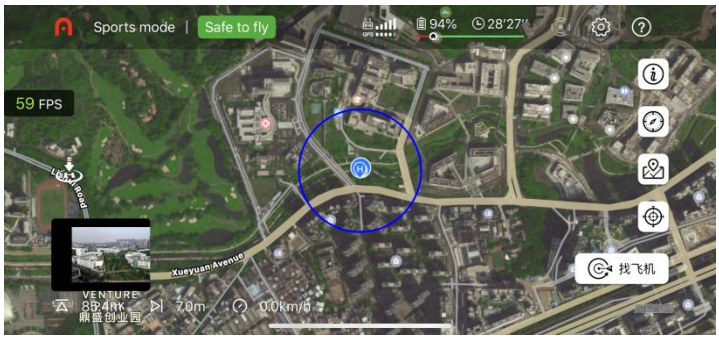

- No-fly zone reminder: view the information on no-fly zone, height limit zone, etc.
- Compass: indicate orientation.
- Map mode: select normal, satellite or blend layer.
- Positioning: quickly lock the position of aircraft, remote controller or return point on map.
- Find my drone: find the missing aircraft by activating flashing light and buzzer.

16. One-click takeoff/land

Long press and slide it to fly/land the aircraft. In the case of flight, it is allowed to land the aircraft at the point of departure, vertically land at the current position or land at the place of remote controller.

4.2 Camera function

4.2.1 Quick transfer

The photo and video can be directly downloaded from EVO Nano aircraft to the mobile device at a transmission rate up to 20MB/s through Autel Sky App.

Operating procedure

1. Turn on the aircraft power supply and place the aircraft on the ground.
2. Connect mobile phone to the remote controller, operate Autel Sky App, andpair aircraft and the remote controller.
3. After pairing, open the album, select the required materials and then click the download icon (⊡) to realize high-speed download.

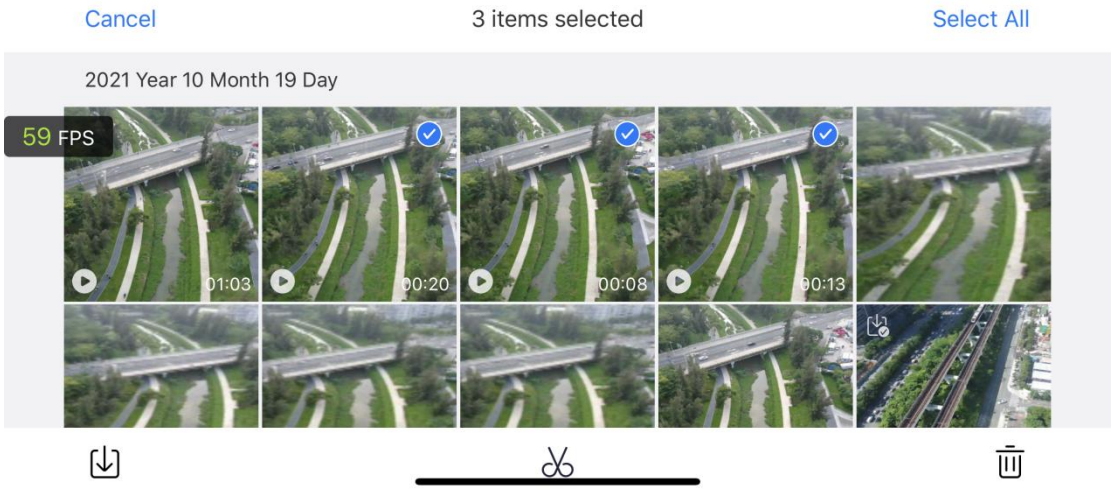

Important

- Please use the quick transfer function in an environment free of interference or blockage and away from router, bluetooth headset and other interference source.
- In the country and region where 5.8GHz/5.2GHz is allowed, the maximum download fate can be achieved in an environment free of interference or blockage; if 5.8GHz/5.2GHz is not allowed, the use of 2.4GHz will limit the download rate.

4.2.2 One-click quick shot

The quick shot is shot by four shooting modes, namely fade away, rocket, orbit and flick. The aircraft automatically flies according to the selected shooting mode and continues to shoot for a specific time. Finally, it automatically generates a short video to support continuous editing and

rapid sharing in the App.

Fade away: the aircraft rises while moving back, and the lens follows the object for shooting.

Rocket: the aircraft rises vertically after arriving above the object, and the lens looks down the object for shooting.

Orbit: the aircraft takes the object as a center and makes a surrounding flight at a specific distance for shooting.

Flick: the aircraft takes the object as a center and adopts the system-defined arc route for shooting.

Operating procedure

1. Ensure that the battery is full. Start the aircraft to more than 2.5m above the ground.
2. Switch the shooting mode to short film (when a different one-click short film mode is selected, there will be the description of relevant short film), and show the shooting effect. Ensure that the surrounding has no obstacle and is suitable for automatic flight.

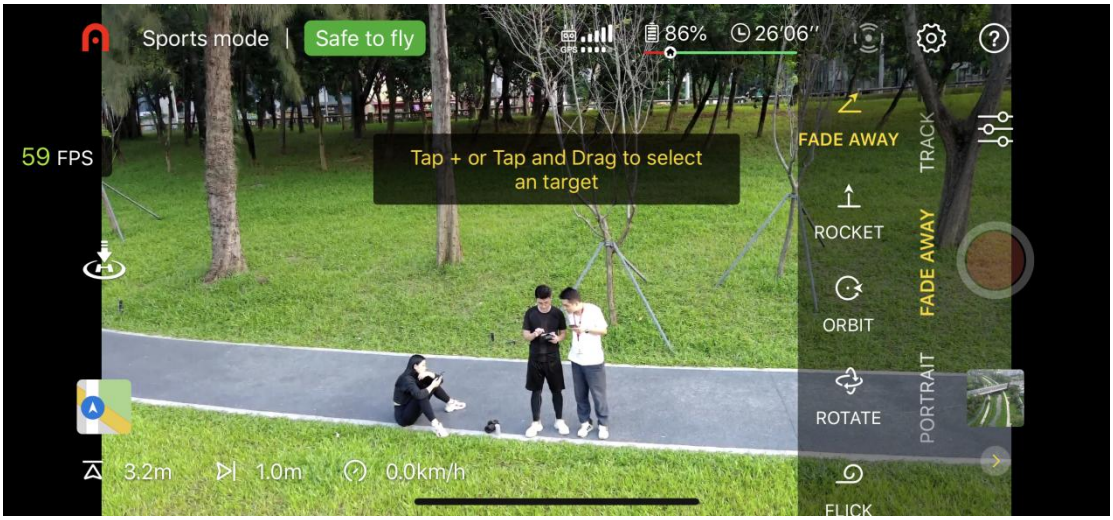

3. After selecting any short film mode, click "+" on the object on the screen or use your finger to select the object, and click the photo/video button, The aircraft will automatically fly and record video and return the starting point after the completion of shooting.
4. After shooting, click the album to view the short video, and continue to edit it in APP and share it to other social platform.
5. After user clicks the photo/video button on APP camera interface, uses the command stick of remote controller or short presses the remote controller pause button to quit the short film shooting, the aircraft will brake and hover at current position, and the materials taken before such interruption will be saved in album.

Important

- Please use the short film shooting in an open environment free of obstacle and blockage.
- Pay close attention to any pedestrian, vehicle, animal or other obstacles in the surrounding environment to avoid the occurrence of accident.
- The distance between aircraft and remote controller shall maintain within 30m, and the aircraft shall be within the range of operator's visibility.

- Please do not use the one-click short film function in the case of the poor GPS signal due to building or blockage, otherwise this may cause unstable flight path of aircraft or other accidents.
- When using the one-click short film function, user shall abide by the local laws on privacy right.
- In the following scenes, the vision system of Lite series will not operate normally, so it is inadvisable to use the one-click short film function:
  - When the object being shot is blocked for long or located outside the range of visibility;
  - When the object being shot is more than 50m from the aircraft;
  - When the object being shot has very similar color or pattern with the surrounding environment;
  - When the object being shot is located in the air;
  - When the object being shot moves quickly;
  - In a particularly dark (illumination less than 300 lux) or bright (illumination greater than 10,000 lux) environment.

4.2.3 Intelligent track

The intelligent track based on image recognition has recognition function on people, animal, vehicle, ship and other objects. When user clicks the realistic picture on the camera interface of Autel Sky App to select an object, the aircraft will follow the object by gimbal camera, and the aircraft will maintain a certain distance with the object for following shot. User can select quick, dynamic or orbittrack.

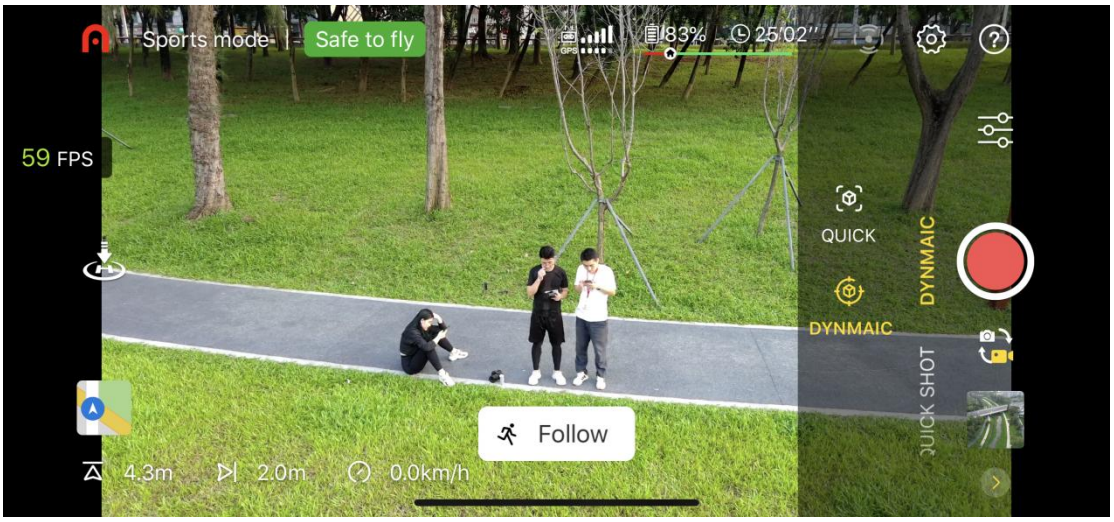

Quick: the relative position between the aircraft and the object being shot will be fixed for following shot. If this mode is used, the camera interface will display 8 shooting directions for user choice. If it is not selected by user, the system default is that the aircraft is directly in front of the object being shot.

Dynamic: when the intelligent follow is used, the system will remind user to follow the object or not; if yes, the aircraft camera gimbal will lock the object and find the shortest follow path for shooting; if no, the aircraft camera gimbal will lock the object only but not follow it for shooting.

Orbit: the aircraft will take an object as a center and follow and surround the object at a certain

distance for shooting.

Operating procedure

1. Ensure that the aircraft battery is adequate, and start the aircraft to more than 2.5m above the ground.
2. Enter the camera interface of Autel Sky App, select the follow mode.
3. After selecting any track mode, clicking "+" on the object on the screen or using your finger to select the object, and clicking the photo/video button, the aircraft will keep a distance with the object for tracking shot.
4. After user clicks the photo/video button on APP camera interface, or short presses the pause button of remote controller to quit the track mode, the aircraft will brake and hover at current position, and the materials taken before such interruption will be saved in album.

Important

- Be sure to avoid pedestrian, animal, small object (such as tree branch or electric wire, etc.) or transparent object (such as glass or water surface) when following.
- Always look at the objects around the aircraft (especially on the left or right), and manually operate the remote controller to avoid collision.
- When using the track mode, user shall abide by the local laws on privacy right.
- Carefully use the track mode in the following scenes:
  - When the object being followed moves on a non-level ground;
  - When the object being followed has large shape change while moving;
  - When the object being followed is covered for long or located outside the range of visibility;
  - When the object being followed is located in a snow-covered area;
  - When the object being followed has very similar color or pattern with the surrounding environment;
  - In a particularly dark (illumination less than 300 lux) or bright (illumination greater than 10,000 lux) environment.

Chapter 5 Flight

EVO Nano series adopts the unique portable design and has been assembled in factory. In order to ensure safe operation of UAV, please read the following instructions and warnings before first flight.

5.1 Safe operation guide

5.1.1 Flight environment

- Please abide by the local laws and regulations on UAV flight. Fly only in the designated aircraft movement area, and use Autel Sky App to set the satisfactory distance and height limits.
- Never fly in severe weather such as heavy fog, rain, hail, snow, high wind (force 6 and above) and so on.
- Please fly in an open area away from densely-populated area, building and electromagnetic interference source. The building containing more reinforcement bars will affect the operation of compass and block the GPS signal, causing the poor positioning of aircraft and even positioning failure. It is recommended to keep the aircraft from the building by at least 5m.
- Please fly in the area where the altitude is 4000m below.
- In the case of flying indoors, some functions may be limited due to insufficient light, lack of GPS signal or narrow space.
- Please control the aircraft within the range of visibility, and keep it away from obstacle, crowd, water surface (by 3m above), etc.

5.1.2 Pre-flight

Before the UAV flies, it is always necessary to pay attention to the following matters:

- Ensure that the aircraft, remote controller and mobile device are fully charged.
- Ensure that the protective cover for gimbal have been removed.
- Ensure that the aircraft camera lens and sensor keep clean.
- Ensure that the propeller has been installed correctly without damage.
- Ensure that each component of the aircraft has been assembled.
- Ensure that the aircraft motor, gimbal and camera can work normally after power on.
- Ensure that all alarms and errors displayed in Autel Sky App have been processed.
- Ensure that Autel Sky App and its firmware have updated to the latest version.
- Ensure that you are familiar with the control and operation of the aircraft.
- Only use the accessories supplied with the aircraft or sold or authorized by Autel Robotics for the aircraft. The use of unapproved accessories will bring serious safety risk and void the product warranty.

5.1.3 In-flight

- The aircraft shall keep away from people, vehicle and other moving object when taking off and landing.
- Do not let the aircraft out of your sight.
- The aircraft shall not get close to the mirror reflection area such as water surface or snowfield in the case of vision positioning. Ensure the flight of the aircraft in a well-lit environment in the event of poor GPS signal.
- Do not cancel the auto return process in the event of low battery alarm. Otherwise the aircraft may return to the return point due to insufficient power.
- When Autel Sky App displays an alarm, immediately carry out operation according to relevant specification.
- Ensure that you are free of drunkenness, high blood pressure, dizziness, fatigue or any other physical condition that may affect the safe operation of the aircraft.

5.1.4 Storage and maintenance

- Carefully check each part of the aircraft after any collision or extrusion. Store the aircraft and its accessories out of the reach of children and pets.
- Store the aircraft and its accessories in a cool and dry place.
- Keep the aircraft away from water source and heat source.
- The recommended temperature of the aircraft shall be 22 ℃~28 ℃ (72 ℉~82 ℉).

5.2 Flight preparation

5.2.1 Battery preparation

1. Install aircraft battery

Turn off the battery power switch before installing battery, and insert the battery into battery compartment.

2. Charge aircraft battery and remote controller

Use the provided charging lines to respectively plug into the charging interfaces of the aircraft and the remote controller to ensure that the aircraft is fully charged.

5.2.2 Remote controller preparation

1. Connect mobile device

Extend the mobile device support, place the mobile device on the support, insert the mobile phone port of the remote controller connector into the mobile device (it is allowed to replace corresponding Micro USB, USB-C, Lightning interface adapter for remote controller). Ensure that the mobile device has firmly been inserted into the slot.

2. Extend remote controller

Slowly pull out the mobile device support. When the antenna plane directly faces the aircraft, the signal quality between the remote controller and the aircraft can achieve the optimal condition.

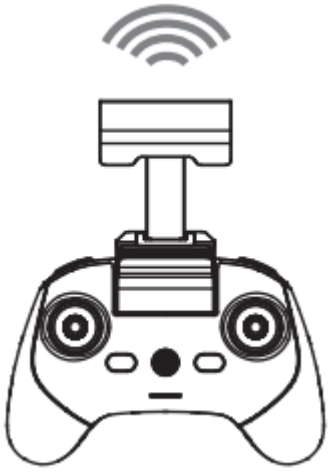

3. Turn on remote controller

Press the power button for 2s to turn on the remote controller.

5.2.3 Aircraft preparation

1. Extend aircraft

Before the aircraft power switch is turned on, slowly pull out the protective cover for gimbal, extend the front arm, rear arm and propeller successively.

Important

- Ensure that the protective cover for gimbal has been removed and the arms have been extended before the aircraft power switch is turned on.
- Please extend the front arm and then the rear arm.
- Be sure to turn off the aircraft power switch before turning off the remote controller. Turn off the aircraft power switch before the arms are folded. First extend the rear arm and propeller and then the front arm.

2. Turn on aircraft

Press the power button for 3s to turn on the aircraft. The power indicator will be lit to indicate the current battery level.

3. Pair aircraft and remote controller

Refer to the paragraph 3.5 for this operation procedure.

5.3 Flight operation

This aircraft includes three command stick modes, mode1, mode2, mode3 and each mode has different control on the aircraft. Please refer to the paragraph 3.2.4 for detailed stick operation.

The default mode is the mode2 which is recommended for the beginner. The following flight operations take the mode2 as an example.

5.3.1 Basic flight

1. Place the aircraft at an open area. Stand at least 5m from the tail of the aircraft.
2. Turn on your remote controller and aircraft.
3. Operate Autel Sky App, connect the mobile device and the aircraft, and enter the camera interface.
4. Use the remote controller to start motor after the tail LED indicator becomes green and flash slowly.
5. Slowly push up the lifter to make the aircraft take off stably.
6. Carefully control the aircraft within your range of visibility.
7. Pull down the lifter to land the aircraft.
8. After the aircraft lands on the ground, pull the lifter to the lower position for 2s till that the motor is turned off.
9. Disconnect the power supply of aircraft and remote controller in turn.

5.3.2 Takeoff

Remark

- The aircraft cannot fly when the battery level is 15% or below.

1. Manual takeoff

1) As shown in figure, press the left and right command sticks for 1s to start motor.

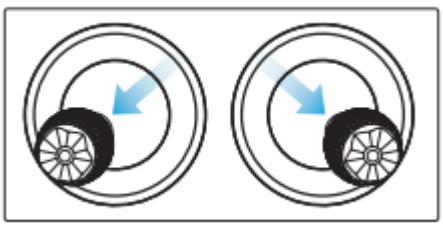

or

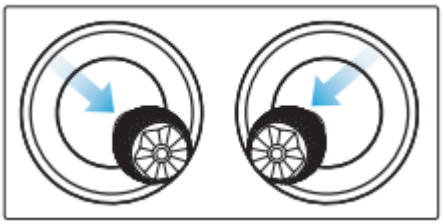

2) Slowly push up the left command stick.

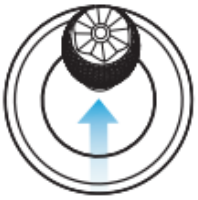

Warning

- Motor will generate heat during operation. Please operate with care.
- If you are the first time to control the aircraft, please move the command stick gently till that you are familiar with its operation.

2. Automatic takeoff

1) Press and slide the one-click takeoff button on the APP camera interface.

2) The aircraft will automatically rise to the height of about 2.5m. During the rising, you can adjust the position of the aircraft by using the left command stick.

⚠ **Warning**

- Never take off on moving object, such as moving ship and vehicle.

5.3.3 Landing

ⓘ **Important**

- Always land on a flat and open surface.

1. Manual landing

1. Find an appropriate aircraft landing position.
2. When the aircraft arrive above the target position, release the command stick to make the aircraft hover.
3. Slowly push down the left command stick to land the aircraft.
4. After the aircraft lands on the ground, pull the left command stick to the bottom for 2s till that the motor is turned off.

2. Automatic landing

1) Press and slide the one-click landing button on the APP camera interface.

2) During the landing, you can use the right command stick to adjust the position of the aircraft.

Remark

- During the automatic landing, you can recover the control on the aircraft when pressing the pause button of remote controller.
- The automatic landing can also be used in ATTI mode. However, the aircraft may drift in this mode, so its flight height shall be monitored.
- In the case of low battery alarm, the rear LED of the aircraft will flash red. At this time, it is necessary to return the safe landing point as soon as possible.

5.4 Flight restrictions

According to the controlled airspace and UAV management regulations of the ICAO and the air traffic management authorities of each country, UAV must fly in the specified airspace. For the sake of flight safety, the flight restrictions are activated by default, including height and distance limits and flight restriction in special area.

Remark

- Operator shall abide by all the local rules and regulations concerning flight.

5.4.1 Classification of restricted area

The restricted area is classified into two.

Class I: main airport & low-altitude area for manned aircraft

1. Restricted area

A circular area centered on this area and with a radius of 2.4km (subject to government rules)

2. Height limit area

An annular area centered on this area and with a radius of 2.4~8km. The flight height of the aircraft is limited and such height limit varies with the radius. When the radius decreases from 8km to 2.4km, the maximum flight height will decrease from 120m to 10.5m.

3. Warning area

APP will give a warning information when the aircraft enters the area of 8.1km from the airport.

Class II: Sensitive area or organization & military area & border between countries

1. Restricted area

A circular area centered on this area and with a radius of 1km

2. Warning area

APP will give a warning information when the aircraft enters the area of 2km from the airport.

5.4.2 Height limit and distance limit

The maximum height is used to restrict the flight height of the aircraft, and the maximum radius is used to restrict its flight distance. User can make settings in Autel Sky App. In the case of valid GPS, the flight restriction and the height and distance limits in special area will jointly affect the flight. In the case of invalid GPS, the aircraft will be restricted only by height.

Remark

- The flight height refers to the vertical height of the aircraft above the return point, and the flight distance refers to the horizontal distance between the aircraft and the return point.
- The flight height is 120m by default, with the adjusting interval of 30~800m; the maximum distance is at least 30m by default, with the adjusting interval of 30 and above; the return height is 30m by default, with the adjusting interval of 30~800m. The flight height, maximum distance and return height are the system default, which can be adjusted by user as required.
- Under the beginner mode, the default values are 30m for flight height, 100 for maximum distance, 30m for return height and 11km/h for maximum flight speed, and the modes cannot be switched.
- The height limits are different in each country and region. Please the local air traffic management authority for actual height limit.

Chapter 6Maintenance and service

6.1 Firmware update

In order to optimize the system performance of EVO Nano series aircrafts, Autel Robotics will update relevant firmware when necessary.

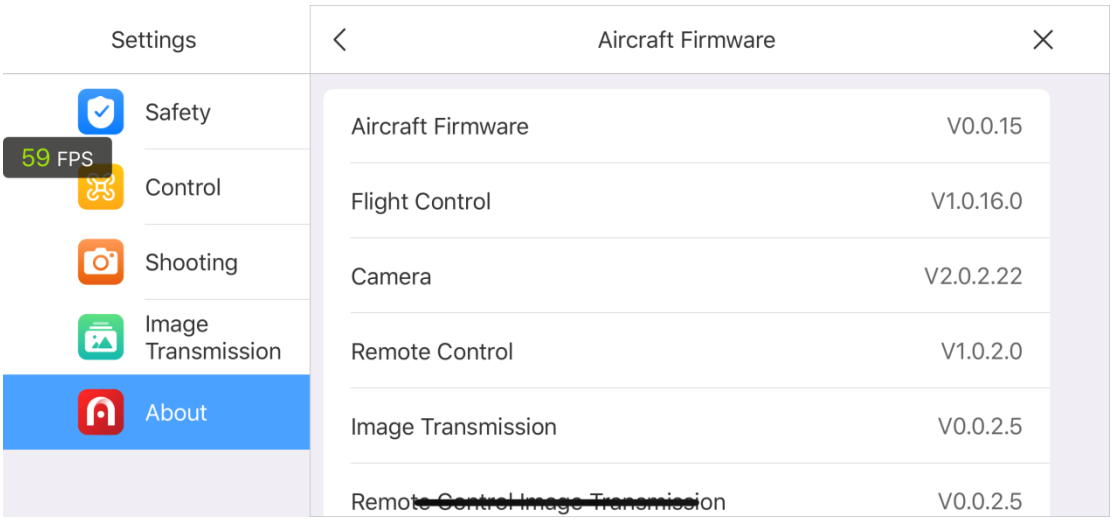

6.1.1 Download and update firmware

User can use the following two methods to download firmware package.

Method 1: download firmware upgrade package from Autel Sky app

1. Turn on your remote controller and aircraft, connect your mobile phone to the remote controller, operate Autel Sky app.
2. When the system detects new firmware version, Autel Sky app will open a prompt box after it is connected with the aircraft to remind you to download and install the new version.
3. Please follow the prompt on Autel Sky app to update the firmware. User can view the upgrade process on App interface.
4. Please restart the aircraft and the remote controller after update.

Method 2: download firmware upgrade package from the official website of Autel Robotics

1. Visit the official website of Autel Robotics to download the firmware upgrade package: www.autelrobotics.com.
2. Insert SD card into your computer, save the downloaded firmware package under the root directory of SD card.
3. Turn on your remote controller and aircraft, connect your mobile phone to the remote controller, operate Autel Sky app.
4. Insert SD card into the aircraft for automatic update. User can view the upgrade process on App interface.
5. Please restart the aircraft and the remote controller after update.

Important

Before firmware update, please ensure that:

- Update the firmware by step, otherwise the update may be failed. The aircraft will shut down automatically after update.
- If the device is closed during update, the update may be failed.
- In the case of network outage during update, the update may be failed.
- The whole update process will take more than ten minutes. The following situations may occur in the aircraft during update: it is normal that the gimbal is weak, the status indicator flashes abnormally, or the aircraft restarts; Please wait patiently for completing firmware update.
- Ensure that the aircraft and remote controller have the battery level of more than 30%.
- After the firmware update, the flight control parameters such as return height and distance limit of the aircraft will be reset. Please reset them after update.

6.2 Storage and maintenance

In order to ensure the optimal performance of EVO Nano, please read and abide by the maintenance instruction of this section carefully.

- Store the aircraft, battery and remote controller in a clean, dry, cool and well-ventilated place.
- Protect the aircraft from direct sunlight when it is not used.
- Please wipe dry your two hands before operating the aircraft.
- Clean the camera lens with the soft cloth with alcohol or gentle window cleanser. Do not use any strong cleanser, detergent or chemical.
- Keep the battery charger clear of other conducting materials.
- Avoid the aircraft and its accessories falling, especially falling on a hard surface. Carefully check all components after each collision or impact. Please contact the customer support of Autel Robotics for any damage.
- Only use the accessories authorized by Autel Robotics, such as charger. We will provide no warranty for any accident due to the use of unapproved accessories.

6.3 Warranty

Autel Robotics Co., Ltd (hereinafter referred to as “the Company”) promises to the original retail buyer of the product that: under the normal use condition, if the product or its any part is certified to have defect in material or technology, causing equipment fault, then you can, within the warranty period (calculated from the date of delivery), carry your proof of purchase for free repair or replacement service by the Company.

Scope of service:

- Within the warranty period, the product has the non-human performance fault during normal use;
- The product is not disassembled without approval or modified or added as instructed by non-official manual, or has other non-human faults;
- The equipment serial number, factory label and other marks are not torn away or altered;

- The effective proof of purchase, document and document number are provided;
- This service is only applicable to the China mainland, and other countries and regions shall be subject to local policies, laws and regulations.

This warranty clause will not be applied:

- When the product is out of the warranty period;
- When the battery has been charged for more than 200 times;
- When the product doesn't use the official latest firmware;
- When the fault is caused when product is used for unlawful activities;
- When the product flight log has been changed or deleted without approval;
- When the serial number label and waterproof mark of the product are damaged or altered;
- When the product has appearance, decorative or structural (such as frame and non-operating component) defects;
- When the damage is caused because it is not installed, used and operated as instructed by the manual;
- When the product damage is caused because of the use of the self-programming or non-official software;
- When the damage is caused by the reliability and compatibility problems when the product is used with the component of a third party other than Autel Robotic;
- When the product suffers from abnormal use or environment, accident or improper handling, unauthorized change, abuse, or improper installation, maintenance or storage;
- When the product is damaged due to external factors, including but not limited to, natural disaster, fire, water, dirt, dust, battery leakage, fuse burn-out, theft or any improper use of power supply;
- When user fails to send the product within 7 natural days after contacting Autel Robotic for warranty service.

6.4 Customer service

This section includes the information on technical support, maintenance service, application for replacement and spare parts.

If you have any problem or question about our product, please contact the customer support of Autel Robotic:
China
Tel: 0755-2690 8091
Website: www.autelrobotics.cn

North America/Europe
Tel: (844) 692-8835
Email: support@autelrobotics.com / support.eu@autelrobotics.com
Website:www.autelrobotics.com

6.4.2 Maintenance service

If you want to return your equipment for repair, please mail to support@autelrobotics.com or call the customer support of Autel Robotic: 0755-2690 8091.

You are advisable to provide the following information:

- Name
- Email
- Mailing address
- Phone number
- Product name
- Complete problem description and photo
- For warranty: provide the proof of purchase
- For non-warranty: provide the preferred payment mode

The customer support personnel of Autel Robotic will evaluate the problem and give a reply within 2 days.

Remark

- All contents of the product may be deleted during maintenance. You are advisable to create a backup copy for the product before delivering it for warranty service.

AnnexSpecification parameter

Aircraft	Takeoff weight	249g
	Dimensions (including blades)	Folded: 140×90×50mm Unfolded: 264×310×50mm
	Wheelbase	231mm
	Max ascent speed	6m/s (sport), 4m/s (standard), 3m/s (smooth)
	Max descent speed	4m/s (sport), 3m/s (standard), 2m/s (smooth)
	Max level flight speed(no wind, near sea level)	15m/s (sport), 10m/s (standard), 5m/s (smooth)
	Max takeoff altitude	4000m
	Max flight time (no wind)	28min
	Max hovering time (no wind)	26min
	Max flight distance (no wind)	16.8km
	Max wind resistance	Level 5
	Max tilt angle	33 °(sport), 25 °(standard), 25 °(smooth)
	Max angular velocity	200 °(sport), 120 °(standard), 60 °(smooth)
	Operating temperature	-10 ℃ ~ 40 ℃
	Operating frequency	2.400-2.4835GHz， 5.725-5.850GHz,5.150-5.250GHz
	Transmission power (EIRP)	FCC:≤30dBm
	GNSS	GPS
	Hovering accuracy	Vertical: ±0.1m (when the visual positioning is active), ±0.5m (with GPS positioning); Horizontal: ±0.3m (when the visual positioning is active), ±1.5m (with GPS positioning);
Gimbal	Mechanical range	Pitch: -125 °~35 ° Roll: -34 °~33 ° Yaw: -25 °~25 °
	Controllable range	Pitch: -90 °~ 0 °
	Stabilization	3-axis
	Max control speed (pitch)	30 °/s
	Angular vibration range	±0.003 °

Perception system	Forward	Accurate measurement range：0.5~16m Effective sensing speed：<10m/s FOV：Horizontal<40 °,Vertical<30 °
	Backward	Accurate measurement range：0.5~18m Effective sensing speed：<12m/s FOV：Horizontal<40 °,Vertical<30 °
	Downward	Accurate measurement range：0.5~20m Visual hovering range：0.5~40m FOV：Horizontal<40 °,Vertical<30 °
	Operating environment	Forward, backward: Surface with clear pattern and adequate lighting(lux> 15) Downward: Surface with clear pattern and adequate lighting(lux> 15); Detects diffuse reflective surfaces(>20%) (walls, trees, people, etc.)
Camera (Nano)	Sensor	CMOS：1/2 inch Effective pixels：48M Pixel size：1.6μm*1.6μm（Bin2）
	Lens	FOV：84 ° Equivalent focal length：24mm Aperture：f/2.8 Focus range：1m ~ ∞ Focus mode: fixed focus
	Shooting mode	Automatic mode (P gear): EV adjustable, ISO/Shutter automatic Manual mode (M gear): ISO/Shutter adjustable, EV not adjustable Shutter priority (S file): Shutter/EV adjustable, ISO automatic
	ISO range	Video：ISO100 ~ ISO3200 Photo：ISO100 ~ ISO3200
	Shutter speed	Photo Mode：1/8000 ~ 8s Other：1/8000 ~ 1/frame rates
	Portrait blur	Real-time image transmission portrait blur and photo portrait blur
	Defog mode	Support
	Zoom range	Digital zoom：1 ~ 16 times
	Photo format	JPG / DNG / JPG+DNG
	Photo resolution	48MP：8000x6000（4:3） 12MP（default）：4000x3000（4:3） 4K：3840x2160（16:9）

	Photo shooting mode	Single shot Burst shooing: 3/5 Auto exposure bracketing(AEB): 3/5 shots Interval: 2s/3s/4s/5s (default)/6s/.../60s (DNG min 5s) HDR imaging: 3840x2160
	Video coding format	H265/H264
	Video resolution	3840x2160 p30/25/24 2720x1528 p30/25/24 1920x1080 p60/50/48/30/25/24 HDR: 3840x2160 p30/25/24 2720x1528 p30/25/24 1920x1080 p60/50/48/30/25/24
	Max bitrate	100Mbps
	Timelapse	Original image:3840*2160，JPG/DNG Video: 4K P25
	Panorama	Horizontal/Vertical/Wide-angle/Spherical Original image: 4000*3000, JPG/DNG
	Supported file system	Fat32、exFat
	Video format	MP4/MOV
	WIFI transfer	20MB/s
Camera (Nano+)	Sensor	CMOS：1/1.28 inch Effective pixels：50MP Pixel size: 2.44μm*2.44μm (Bin2)
	Lens	FOV: 85 ° Equivalent focal length: 23mm Aperture: f/1.9 Focus range: 0.5m ~ ∞ Focus mode:：PDAF+CDAF/MF
	Shooting mode	Automatic mode (P gear): EV adjustable, ISO/Shutter automatic Manual mode (M gear): ISO/Shutter adjustable, EV not adjustable Shutter priority (S file): Shutter/EV adjustable, ISO automatic
	ISO range	Video：ISO100 ~ ISO6400 Photo：ISO100 ~ ISO6400
	Shutter speed	Photo Mode：1/8000 ~ 8s Other：1/8000 ~ 1/frame rates
	Portrait blur	Real-time image transmission portrait blur and photo portrait blur

	Defog mode	Support
	Zoom range	Digital zoom：1 ~ 16 times
	Photo format	JPG / DNG / JPG+DNG
	Photo resolution	50MP：8192x6144（4:3） 12.5MP（default）：4096x3072（4:3） 4K：3840x2160（16:9）
	Photo shooting mode	Single shot Burst shooing: 3/5 Auto exposure bracketing(AEB): 3/5 shots Interval: 2s/3s/4s/5s (default)/6s/.../60s (DNG minimum 5s) HDR imaging: 3840x2160
	Video coding format	H265/H264
	Video resolution	3840x2160 p30/25/24 2720x1528 p30/25/24 1920x1080 p60/50/48/30/25/24 HDR: 3840x2160 p30/25/24 2720x1528 p30/25/24 1920x1080 p60/50/48/30/25/24
	Max bitrate	100Mbps
	Timelapse	Original image：3840*2160，JPG/DNG Video：4K P25
	Panorama	Horizontal/Vertical/Wide-angle/Spherical Original image: 4096*3072, JPG/DNG
	Supported file system	Fat32、exFat
	Video format	MP4/MOV
	WIFI transfer	20MB/s
Remote controll or and image transmis sion	Operating frequency	2.400-2.4835GHz， 5.725-5.850GHz,5.150-5.250GHz
	Max transmission distance (unobstructed, free of interference)	FCC：10km
	Operating temperature	0 ℃ ~40 ℃
	Transmission power (EIRP)	FCC：≤30dBm
	Battery capacity	3930mAh
	Max battery life	~ 3.5h (when connected to a mobile phone) ~ 2.5h (when not connected to mobile phone)
	Interface type	Type C

	Transmission system	Autel SkyLink
	Realtime transmission quality	Transmission distance<1km：2.7K 30fps Transmission distance>1km：720P 30fps
	Transmission bitrate	90Mbps
	Transmission delay	≤200ms
Adapter	Input	100-240V/50-60HZ
	Output	5V⎓3A,9V⎓3A,12V⎓2.5A
	Rated power	30W
Aircraft battery	capacity	2250mAh
	Voltage	7.7V
	Max charging voltage	8.8V
	Battery Type	Li-Po 2S
	Energy	17.32Wh
	Charging temperature	5~45℃
	Single battery charging time	90min
	Max charging power	30W
App	Mobile App	Autel Sky
	Mobile system required	iOS 12.0 and above Android 8.0 and above
Storage	Built-in storage	No
	SD storage	max. support 256GB（UHS-3 rating required）

FCC Caution:

Any Changes or modifications not expressly approved by the party responsible for compliance could void the user's authority to operate the equipment.
This device complies with part 15 of the FCC Rules. Operation is subject to the following two conditions: (1) This device may not cause harmful interference, and (2) this device must accept any interference received including interference that may cause undesired operation.
IMPORTANT NOTE:
Note: This equipment has been tested and found to comply with the limits for a Class B digital device, pursuant to part 15 of the FCC Rules. These limits are designed to provide reasonable protection against harmful interference in a residential installation. This equipment generates, uses and can radiate radio frequency energy and, if not installed and used in accordance with the instructions, may cause harmful interference to radio communications. However, there no guarantee that interference will not occur in a particular installation. If this equipment does cause harmful interference to radio or television reception, which can be determined by turning the equipment off and on, the user is encouraged to try to correct the interference by one or more of

the following
—Reorient or relocate the receiving antenna.
—Increase the separation between the equipment and receiver.
—Connect the equipment into an outlet on a circuit different from that to which the receiver is connected.
—Consult the dealer or an experienced radio/TV technician for help.

For Aircraft:
This equipment should be installed and operated with minimum distance 20cm between the radiator& your body.

For Remote controller:
The device has been tested and comply with FCC SAR limits.
For limb worn operation, this device has been tested and meets the FCC RF exposure guidelines when used with an accessory designated for this product or when used with an accessory that contains no metal.
For body worn operation, this device has been tested and meets the FCC RF exposure guidelines when used with an accessory designated for this product or when used with an accessory that contains no metal and that positions the device a minimum of 10mm from the body.

ISEDC Warning

This device complies with Innovation, Science, and Economic Development standard(s).
Operation is subject to the following two conditions: (1) this device may not cause interference, and (2) this device must accept any interference, including interference that may cause undesired operation of the device.

Cet appareil est conforme aux normes d'innovation, de science et de développement économique.
Son fonctionnement est soumis aux deux conditions suivantes :
(1) cet appareil ne doit pas provoquer d'interférences, et
(2) cet appareil doit accepter toute interférence, y compris les interférences susceptibles de provoquer un fonctionnement indésirable de l'appareil.

For Aircraft:
The equipment should be installed and operated with minimum distance 20cm between the radiator & your body.
La distance minimale du corps à utiliser le dispositive est de 20cm.

For Remote controller:
The device has been tested and comply with IC SAR limits.
L'appareil a été testé et est conforme aux limites IC SAR.

For limb worn operation, this device has been tested and meets the ISEDCRF exposure guidelines when used with an accessory designated for this product or when used with an accessory that contains no metal.
For body worn operation, this device has been tested and meets the ISEDC RF exposure guidelines when used with an accessory designated for this product or when used with an accessory that contains no metal and that positions the device a minimum of 10mm from the body.

Pour une utilisation sur un membre, cet appareil a été testé et répond aux directives d'exposition ISEDCRF lorsqu'il est utilisé avec un accessoire conçu pour ce produit ou lorsqu'il est utilisé avec un accessoire qui ne contient pas de métal.

Pour un fonctionnement porté sur le corps, cet appareil a été testé et répond aux directives d'exposition RF ISEDC lorsqu'il est utilisé avec un accessoire conçu pour ce produit ou lorsqu'il est utilisé avec un accessoire qui ne contient pas de métal et qui positionne l'appareil à au moins 10 mm du corps.

WWW.AUTELROBOTICS.CN

©2021-2022 Autel Robotics Co., Ltd. | Copyright reserved