EVO II RTK Series V3

QUICK START GUIDE

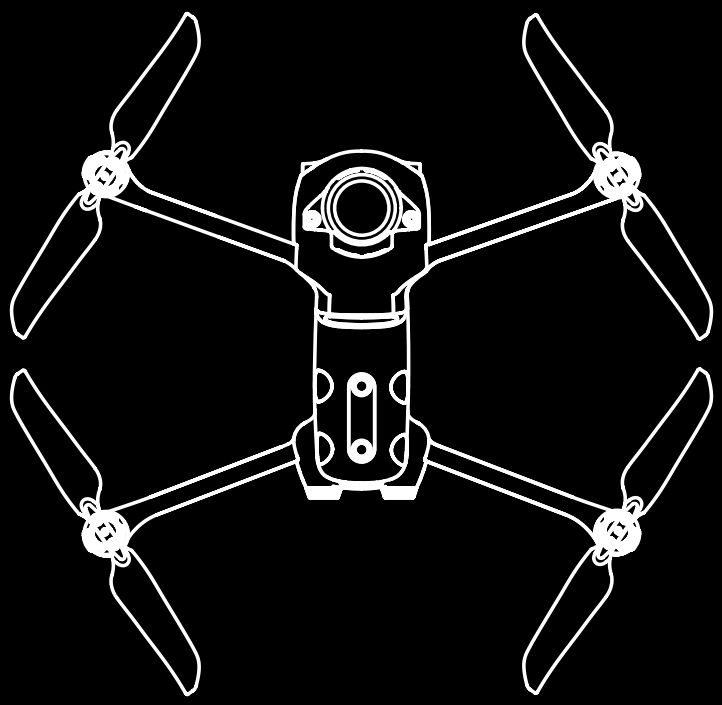

AUTEL ROBOTICS

1. OVERVIEW

The EVO II RTK Series V3 brings excellent flight performance, achieving a top speed of 20m/s (45mph), 36-minute flight time, and an operating distance at 15km (9.32miles, FCC). The aircraft comes with a 7.9 inch touch-screen controller, boasts a 2048x1536 pixel resolution.

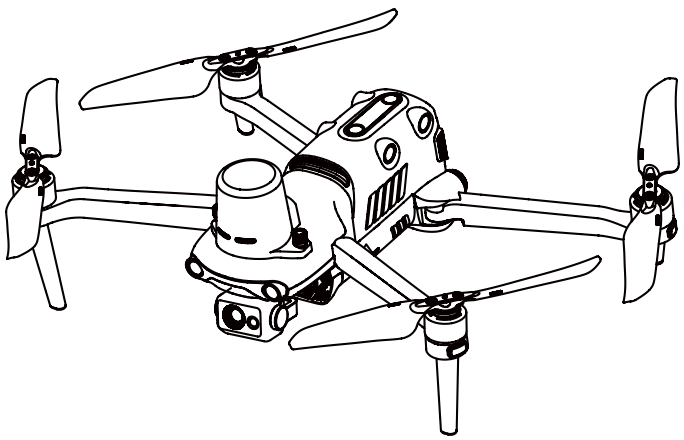

⚠ **NOTE:**

Please read all documentation before your first flight.Failure to operate the aircraft responsibly could lead to injury or damages, and may void any applicable warranty coverage.

2. AIRCRAFT

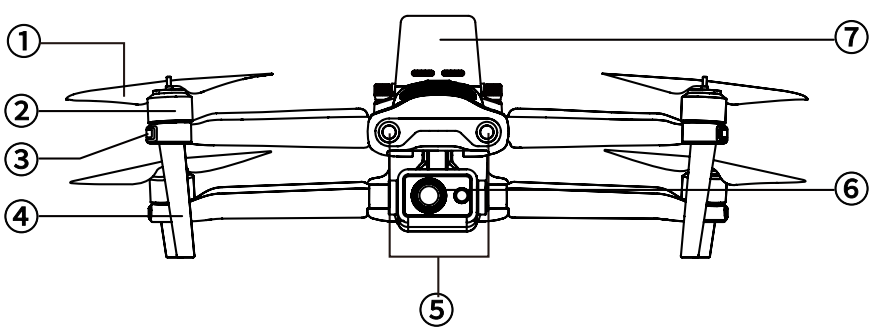

① Propellers
② Motors
③ Front LED Indicators
④ Landing Gear
⑤ Front Vision System
⑥ Gimbal Camera
⑦ RTK Module

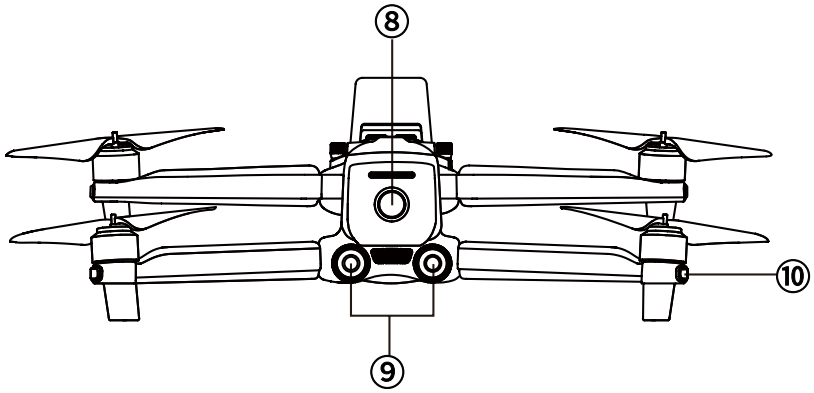

⑧ Power Button

⑨ Rear Vision System

⑩ Rear LED Indicators

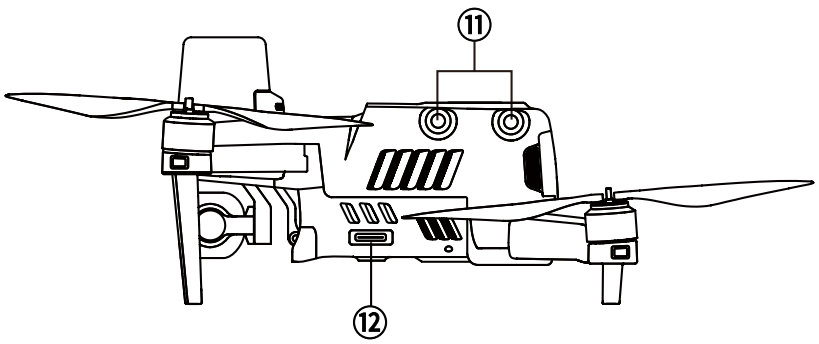

⑪ Left Vision System

⑫ SD Card Slot

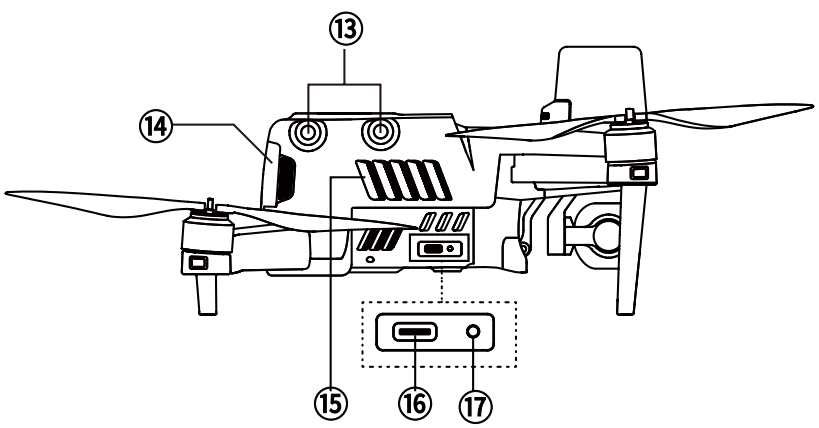

⑬ Right Vision System

⑭ Aircraft Battery

⑮ Air Vent

⑯ USB Port

⑰ Pairing Button / Pairing Indicator

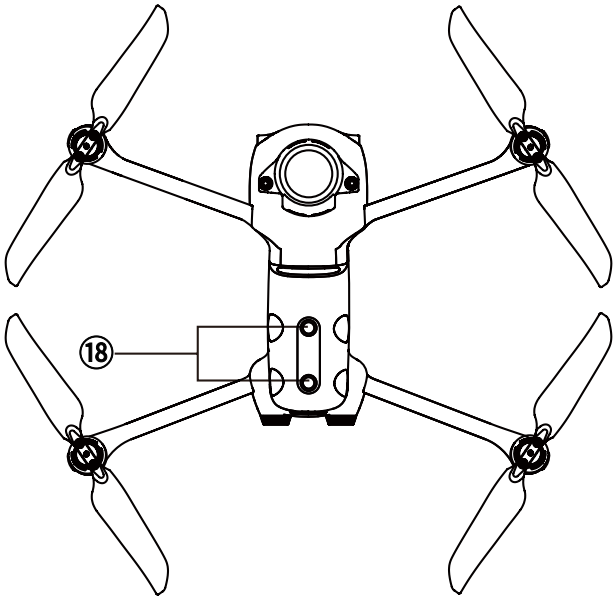

⑱ Upward Vision System

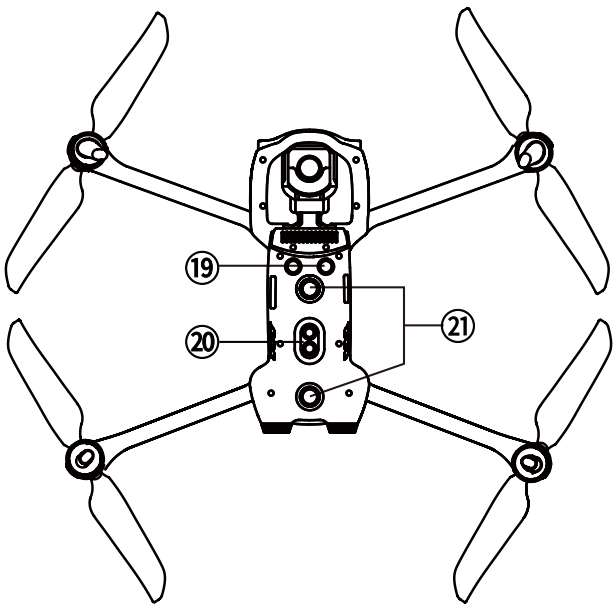

⑲ Ultrasonic Sensor

⑳ Downward Vision Lighting LED

㉑ Downward Vision System

3. FLIGHT LED INDICATIONS

A LED indicator is located on the end of each aircraft arm. The front LEDs will light up solid red to help you identify the direction of the aircraft's nose. The rear LEDs will display the current flight status of the aircraft. The chart below shows the meaning of each status indicator.

Indicator Key:

Slow Flashing: Flashes once every 2s

Fast Flashing: Flashes twice per second

Alternate Flashing: Alternates among different colors

Color Key:

R – Red Color

G – Yellow Color

Y – Green Color

Definitions of Indicator Status	
Normal	
RGY – Alternate Flashing	System self-test is activated
YG - Alternate Flashing	The aircraft is warming up
G – Slow Flashing	The aircraft is in GPS mode
Warning	
Y - Slow Flashing	The aircraft is in ATTI mode
Y - Fast Flashing	No connection between the aircraft and smart controller
R - Slow Flashing	Low Battery Warning
R - Fast Flashing	Critically Low Battery Warning
R – Solid Light	Critical problems, IMU error
RY – Alternate Flashing	Abnormal compass, calibration is required / Magnetometer interference
Compass Calibration	
Y - Fast Flashing	Be ready to calibrate the compass/ The aircraft is calibrating
G – Solid Light	Calibration is successful
R – Solid Light	Calibration is failed

4. REMOTE CONTROLLER

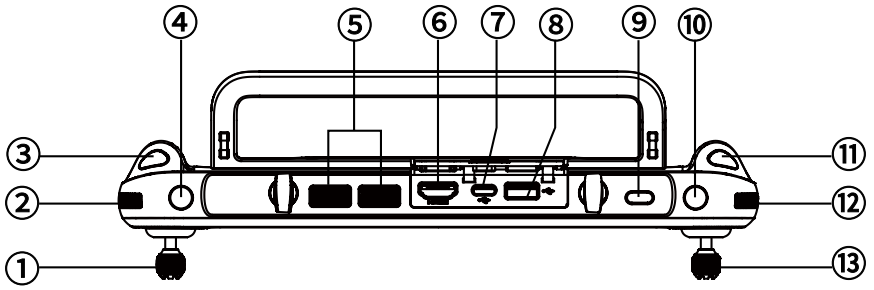

① Left Command Stick
② Gimbal Pitch Angle Wheel
③ Video Recording Button
④ Customizable Button C1
⑤ Air Outlet
⑥ HDMI Port
⑦ USB-C Port
⑧ USB-A Port
⑨ Power Button
⑩ Customizable Button C2
⑪ Photo Shutter Button
⑫ *Zoom Control Wheel
⑬ Right Command Stick

*The function may alter, please take the practical effect as standard.

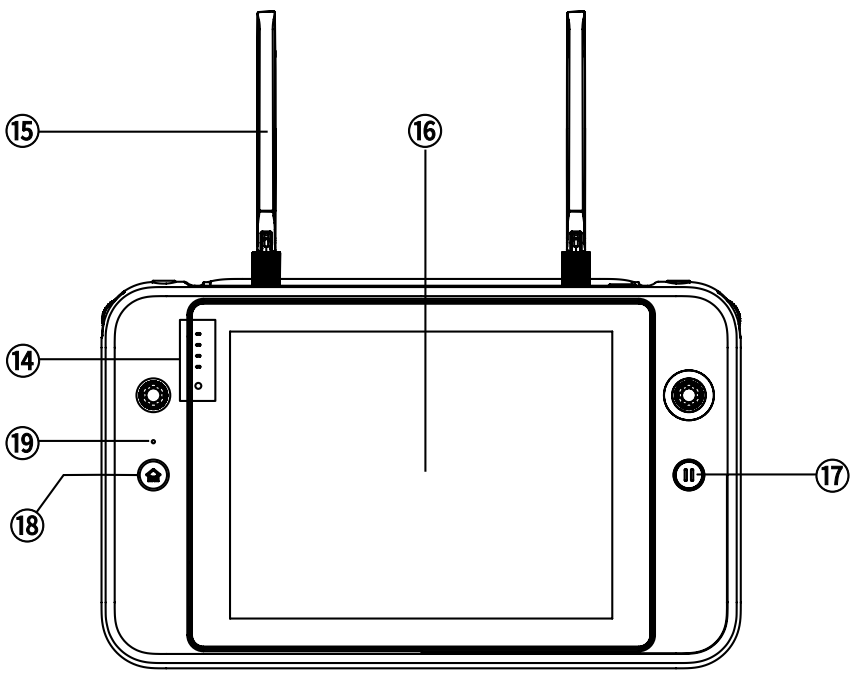

⑭ Battery Indicator
⑮ Antenna
⑯ Touch Screen
⑰ Pause Button
⑱ Auto-takeoff/ RTH Button
⑲ Microphone

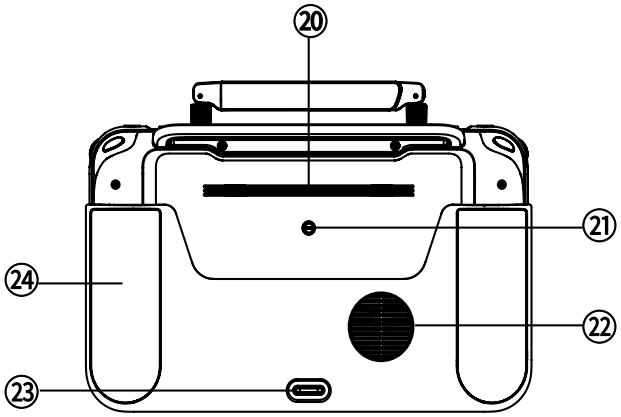

⑳ Speaker Hole
㉑ Tripod Mount Hole
㉒ Air Vent
㉓ Bottom Hook
㉔ Grips

5. CHARGING

(1) Aircraft Battery: Plug the charging connector into the battery's charge port, and connect the other end to power adapter. Plug the power adapter into a power outlet (100-240V AC).

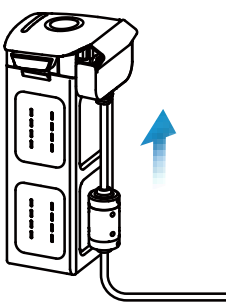

(2) Controller: Connect the charging cable to the USB port at the top of the controller, and the other end to power adapter. Plug the power adapter into a power outlet (100-240V AC).

⚠ **NOTE:**

- Always fully charge the aircraft and smart controller batterybefore flying.
- It takes approximately 90 minutes to fully charge the aircraft battery,and 120 minutes to charge the controller.

---

6. AUTEL EXPLORER APP

Search for 'Autel Explorer' from Google Play and install the app on your controller.

7. PREPARING THE AIRCRAFT

(1) Before powering on the aircraft, please remove the gimbal guard.

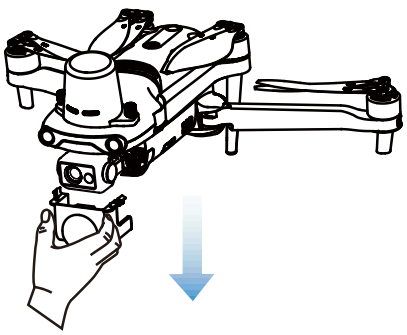

(2) Unfold the arms and propellers.

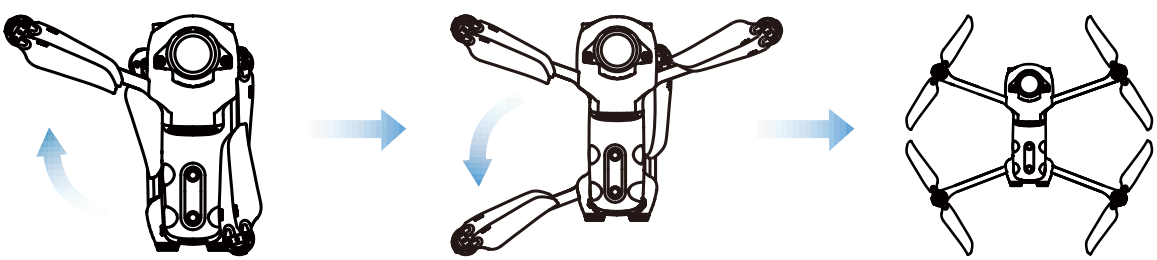

⚠ **NOTE:**

Power off the aircraft before folding the arms. Fold in the rear arms and propellers first, and then the front ones.

8. PROPELLERS

Because the propellers come attached to the aircraft, the following instructions apply if you need to reinstall propellers.

• Attaching the Propellers

(1) Power off the aircraft.

(2) Pair the propellers and corresponding motors according to the white mark .

(3) Press each propeller down firmly and rotate in the lock direction to securely attach the propeller.

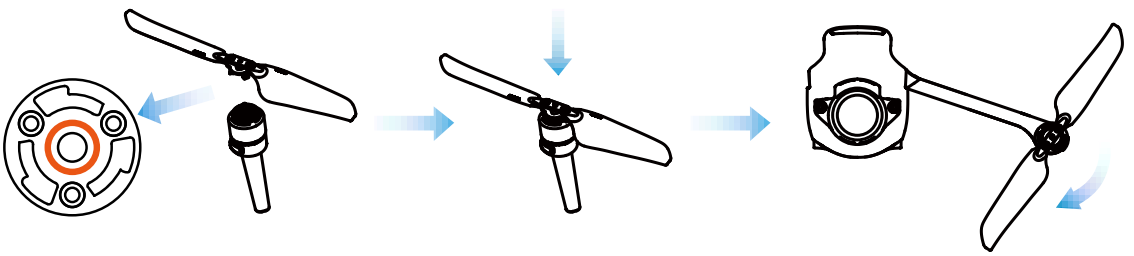

• Detaching the Propellers

(1) Power off the aircraft.

(2) Press each propeller down firmly and rotate in the unlock direction to detach the propeller.

LEGEND

Lock Direction: Fasten the propeller by rotating it as indicated.

Unlock Direction: Unfasten the propeller by rotating is as indicated.

NOTE:

- Power off the aircraft before attaching or detaching propellers.
- Propellers must be undamaged and firmly attached.

9.PREPARING THE CONTROLLER

(1) Unfold the antenna, detach the stick heads on the back of the controller handle, and screw them into the corresponding screw holes on both sides of the screen.

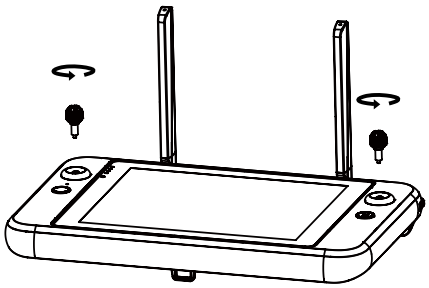

(2) Adjust the antenna angle, and when the antenna and the back of the controller are at the angle of 180 or 260, and the antenna surface is facing the aircraft, the signal quality of the aircraft and controller will reach the optimal condition.

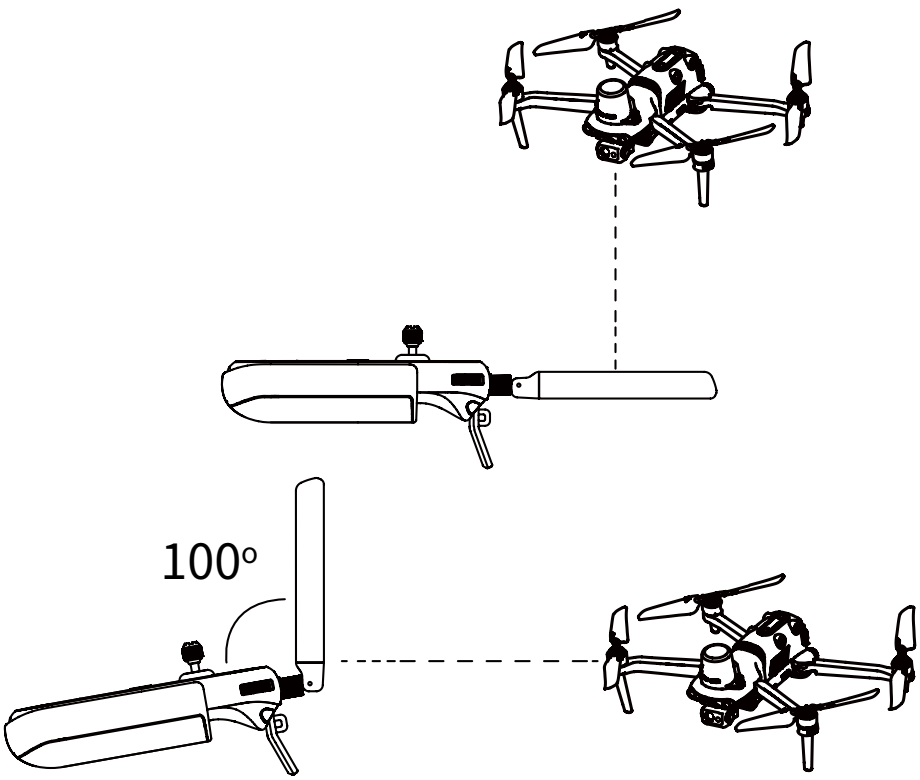

10. POWERING UP

(1) Press and hold the power button for 2 seconds to turn on the controller.

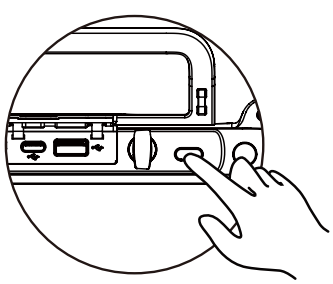

(2) Press and hold the power button 3 seconds to turn on the aircraft.The current battery level will be clearly displayed.

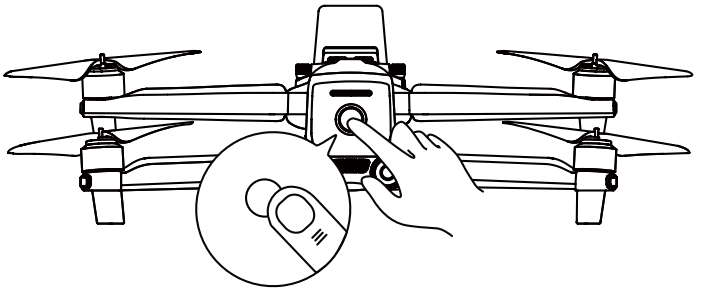

11. TAKE OFF

(1) Start the motors by holding both command sticks for two seconds as shown below.

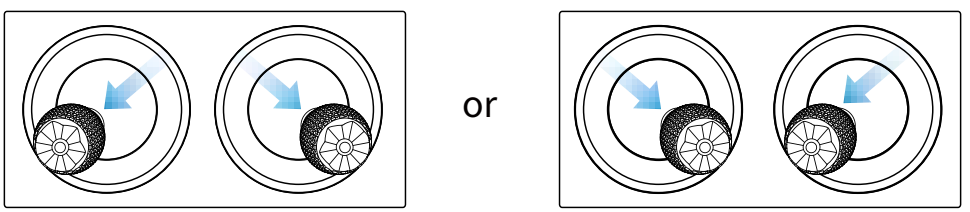

(2) Push the left command stick slowly upward.

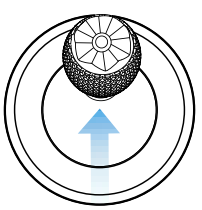

⚠ **NOTE:**

- The default control stick mode is mode 2. The left stick controls the altitude and heading of the aircraft, while the right stick controls the forward, backward and sideward movements.
- Before takeoff, place aircraft on a level surface, stand well clear of the rear of the aircraft.

---

12. COMMAND STICK CONTROLS(MODE 2)

Left Command Stick

Left Side View

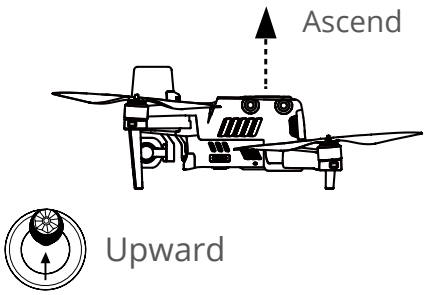

Left Side View

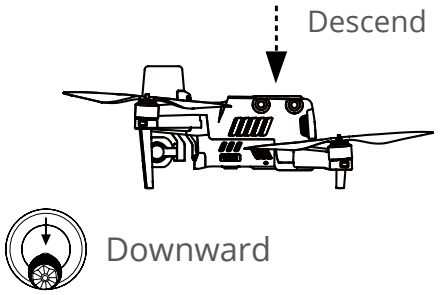

Top View

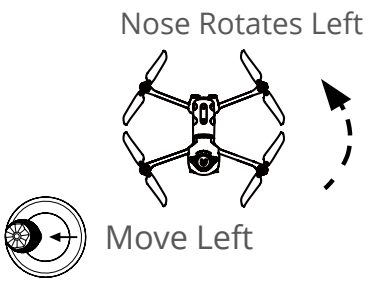

Top View

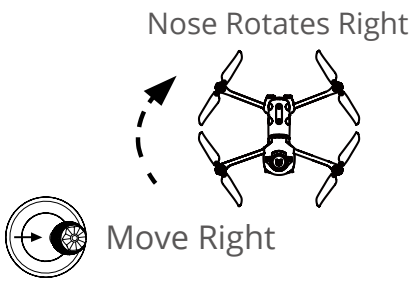

Right Command Stick

Left Side View

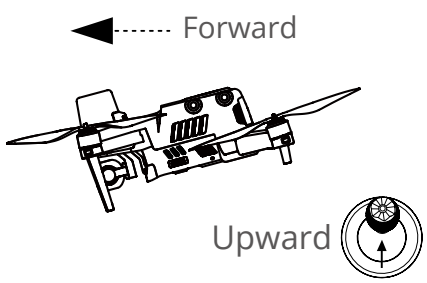

Left Side View

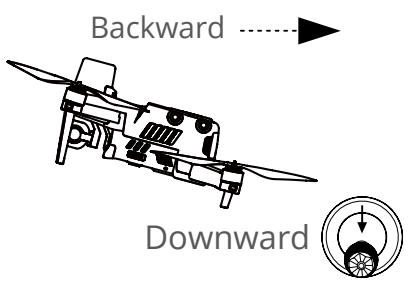

Rear View

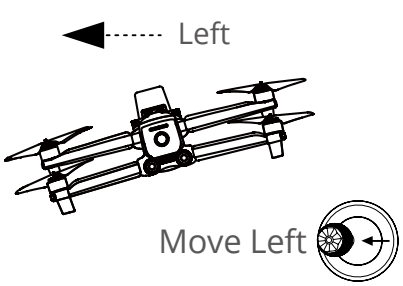

Rear View

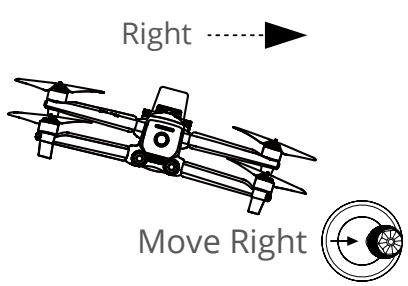

13. SPECIFICATIONS

Aircraft	
Operating Frequency	902~928MHz (FCC); 2.4~2.4835GHz; 5.725~5.850GHz (Non-Japan); 5.650-5.755GHz (Japan)
Transmission Power (EIRP)	900MHz: FCC/ISED<=31dBm 2.4GHz: FCC/ISED<=32dBm; CE/MIC/SRRC/RCM<=20dBm 5.8GHz/5.7GHz: FCC/ISED/SRRC/MIC<=33dBm; CE/RCM<=14dBm
Remote Controller	
Operating Frequency	902~928MHz (FCC); 2.4~2.4835GHz; 5.725~5.850GHz (Non-Japan); 5.650-5.755GHz (Japan)
Transmission Power (EIRP)	FCC: ≤33dBm CE: ≤20dBm@2.4G, ≤14dBm@5.8G/5.7G SRRC: ≤20dBm@2.4G, ≤33dBm@5.8G/5.7G

FCC and ISED Canada Compliance

This device complies with part 15 of the FCC Rules and ISED Canada licence-exempt RSS standards. Operation is subject to the following two conditions:

(1) This device may not cause harmful interference, and
(2) This device must accept any interference received, including interference that may cause undesired operation.

Le présent appareil est conforme aux CNR d'ISED Canada applicables aux appareils radio exempts de licence. L'exploitation est autorisée aux deux conditions suivantes :

(1) l'appareil ne doit pas produire de brouillage, et
(2) l'appareil doit accepter tout brouillage radioélectrique subi, même si le brouillage est susceptible d'en compromettre le fonctionnement.

⚠ **NOTE:**

This equipment has been tested and found to comply with the limits for a Class B digital device, pursuant to part 15 of the FCC Rules. These limits are designed to provide reasonable protection against harmful interference in a residential installation. This equipment generates, uses and can radiate radio frequency energy and, if not installed and used in accordance with the instructions, may cause harmful interference to radio communications. However, there is no guarantee that interference will not occur in a particular installation. If this equipment does cause harmful interference to radio or television reception, which can be determined by turning the equipment off and on, the user is encouraged to try to correct the interference by one or more of the following measures:

- Reorient or relocate the receiving antenna.
- Increase the separation between the equipment and receiver.
- Connect the equipment into an outlet on a circuit different from that to which the receiver is connected.
- Consult the dealer or an experienced radio/TV technician for help.

Changes or modifications not expressly approved by the party responsible for compliance could void the user's authority to operate the equipment.

Aircraft

RF Exposure Information

This equipment complies with RF radiation exposure limits set forth for an uncontrolled environment. This equipment should be operated with minimum distance 20cm between the radiator and your body.

Remote Controller

FCC Specific Absorption Rate (SAR) information

SAR tests are conducted using standard operating positions accepted by the FCC with the device transmitting at its highest certified power level in all tested frequency bands, although the SAR is determined at the highest certified power level, the actual SAR level of the device while operating can be well below the maximum value, in general, the closer you are to a wireless base station antenna, the lower the power output. Before a new model device is an available for sale to the public, it must be tested and certified to the FCC that it does not exceed the exposure limit established by the FCC, Tests for each device are performed in positions and locations (e.g. at the ear and worn on the body) as required by the FCC.
For limb worn operation, this device has been tested and meets the FCC RF exposure guidelines when used with an accessory designated for this product or when used with an accessory that contains no metal.
For body worn operation, this device has been tested and meets the FCC RF exposure guidelines when used with an accessory designated for this product or when used with an accessory that contains no metal and that positions the device a minimum of 10mm from the body.

ISED Specific Absorption Rate (SAR) information

SAR tests are conducted using standard operating positions accepted by the ISEDC with the device transmitting at its highest certified power level in all tested frequency bands, although the SAR is determined at the highest certified power level, the actual SAR level of the device while operating can be well below the maximum value, in general, the closer you are to a wireless base station antenna, the lower the power output.
Before a new model device is an available for sale to the public, it must be tested and certified to the ISEDC that it does not exceed the exposure limit established by the ISEDC, Tests for each device are performed in positions and locations (e.g. at the ear and worn on the body)as required by the ISEDC.
For limb worn operation, this device has been tested and meets the ISEDCRF exposure guidelines when used with an accessory designated for this product or when used with an accessory that contains no metal.

For body worn operation, this device has been tested and meets the ISEDC RF exposure guidelines when used with an accessory designated for this product or when used with an accessory that contains no metal and that positions the device a minimum of 10mm from the body.

Tauxd'absorptionspécifique (SAR) informations les tests SAR

sonteffectués en utilisant les positions opérationnellesnormaliséesaccept éespar la ISEDC, le dispositifémettant à son niveau de puissance certifié le plus élevédanstoutes les bandesdefréquencestestées.Avantqu'un nouveau modèle de dispositif ne soitdisponible à la vente aupublic, ildoitêtretesté et certifié à la ISEDC qu'il ne dépasse pas la limited'expositionétablieparla ISEDC, les Tests pour chaquedispositifsonteffectuésdans des positions et des emplacements(par exemple à l'oreille et portésur le corps) commel'exige la ISEDC.
Pour le fonctionnement desmembresusés, cetappareil a ététesté et répond aux lignesdirectricesd'exposition aux RF ISEDClorsqu'ilestutilisé avec un accessoiredésigné pour ceproduitoulorsqu'ilestutilisé avec unaccessoire qui ne contient pas de métal.
Pour le fonctionnement du corps usé, cetappareil a ététesté et répond aux lignesdirectricesd'exposition RF ISEDC lorsqu'ilestutilisé avec un accessoiredésigné pour ceproduitoulorsqu'ilestutilisé avec un accessoire qui ne contient pas de métal etqui positionnecet appareil à au moins 10mm du corps.

EU/UK Compliance

Autel Robotics Co., Ltd.
hereby declares that this wireless device is in compliance with Directive 2014/53/EU and Radio Equipment Regulations 2017.

18th Floor, Block C1, Nanshan iPark, No. 1001 Xueyuan Avenue,
Nanshan District, Shenzhen, Guangdong, 518055, China
22522 29th Dr SE, Ste 101 Bothell, WA 98021 United States
Toll-free: (844) MY AUTEL or (844) 692-8835
www.autelrobotics.com
©2022 Autel Robotics Co., Ltd. All Rights Reserved

AUTEL
ROBOTICS

www.autelrobotics.com

©2022 Autel Robotics Co., Ltd. All Rights Reserved

FCC Statement

1. This device complies with Part 15 of the FCC Rules. Operation is subject to the following two conditions:

(1) This device may not cause harmful interference.

(2) This device must accept any interference received, including interference that may cause undesired operation.

2. Changes or modifications not expressly approved by the party responsible for compliance could void the user's authority to operate the equipment.

NOTE:

This equipment has been tested and found to comply with the limits for a Class B digital device, pursuant to Part 15 of the FCC Rules. These limits are designed to provide reasonable protection against harmful interference in a residential installation.

This equipment generates uses and can radiate radio frequency energy and, if not installed and used in accordance with the instructions, may cause harmful interference to radio communications. However, there is no guarantee that interference will not occur in a particular installation. If this equipment does cause harmful interference to radio or television reception, which can be determined by turning the equipment off and on, the user is encouraged to try to correct the interference by one or more of the following measures:

Reorient or relocate the receiving antenna.

Increase the separation between the equipment and receiver.

Connect the equipment into an outlet on a circuit different from that to which the receiver is connected.

Consult the dealer or an experienced radio/TV technician for help.

IC STATEMENT

This device complies with Industry Canada licence-exempt RSS standard(s)

Operation is subject to the following two conditions:

(1) This device may not cause interference, and

(2) This device must accept any interference, including interference that may cause undesired operation of the device.

This equipment complies with IC radiation exposure limits set forth for an uncontrolled environment. End user must follow the specific operating instructions for satisfying RF exposure compliance. This transmitter must not be co-located or operating in conjunction with any other antenna or transmitter.

The distance between user and products should be no less than 20cm

Ce dispositif est conforme aux normes autoriser-exemptes du Canada RSS d'industrie

L'exploitation est autorisée aux deux conditions suivantes :

(1) l'appareil ne doit pas produire de brouillage, et

(2) l'utilisateur de l'appareil doit accepter tout brouillage radioélectrique subi, même si le brouillage est susceptible d'en compromettre le fonctionnement.Cet équipement est conforme avec l'exposition aux radiations IC définies pour un environnement non contrôlé. L'utilisateur final doit respecter les instructions de fonctionnement spécifiques pour satisfaire la conformité aux expositions RF. Cet émetteur ne doit pas être co-localisées

Cet appareil a été testé pour des opérations portés sur le corps typiques. Pour se conformer

aux exigences d'exposition aux radiofréquences, une distance minimale de 30cm doit être maintenue entre le corps de l'utilisateur et le combiné, y compris l'antenne. Les pinces de ceinture, les étuis et autres accessoires similaires utilisés par cet appareil ne doivent pas contenir de composants métalliques. Les accessoires portatifs qui ne répondent pas à ces exigences peuvent ne pas se conformer aux exigences d'exposition RF et doit être évitée. Utilisez uniquement l'antenne fournie ou une antenne approuvée