POWEROCKS®

S1 Electric Scooter

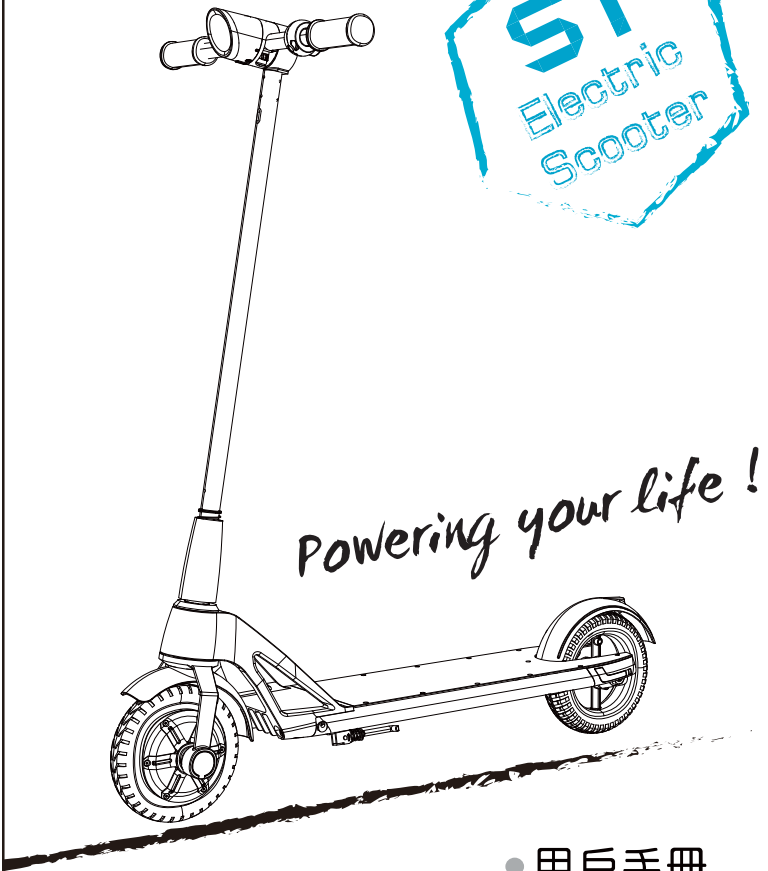

Powering your life !

- 用戶手冊
- User Manual

宝格石
S1
智能电动滑板车
使用说明书

感谢您购买本公司产品！

为了您的方便，使用本产品前，

请仔细阅读此书，并按步骤操作。

一、宝格石S1智能电动滑板车零部件名称

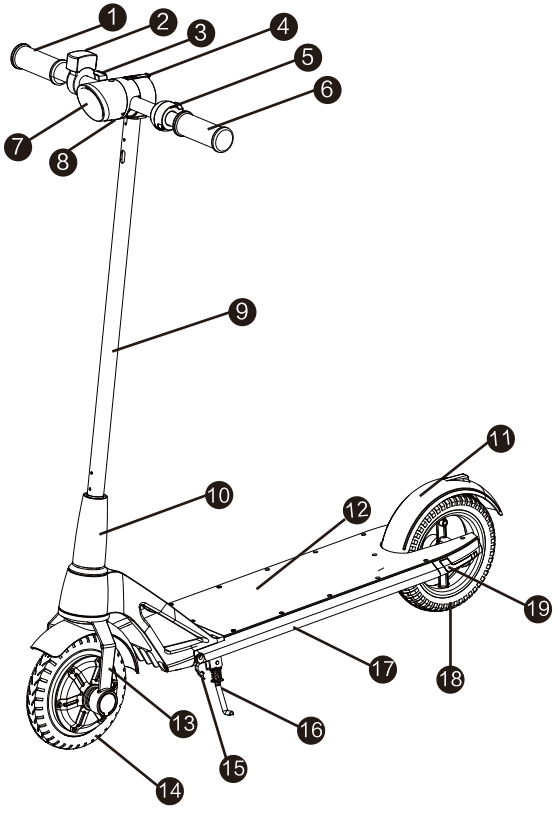

上图中：

1.右车把；2.电量显示器；3.调速把；4.折叠按制扣；5.电子刹车；
6.左车把；7.车头灯；8.手机充电口(5V/1A) 9.直筒；10.连接固定套；
11.脚刹(后挡泥盖)；12.底座盖板；13.前叉；14.主动轮；15.DC接口；
16.支撑脚；17.车底；18.从动轮；19.左尾灯.

二、展开车身

1.解锁折叠按制扣

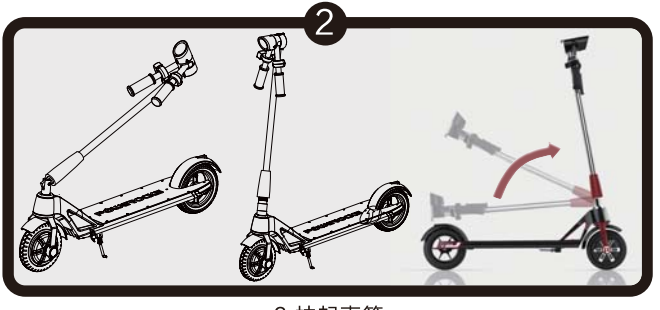

2.扶起直筒

3.连接固定套自动固定直筒和车身

4. 向后拉动折叠按制扣、
然后竖起折叠按制扣

5.用力往下压折叠按制扣并且扶起左右车把
至水平状态、然后松开折叠按制扣

6.掰动折叠按制扣至水平状态、
然后平行推动折叠按制扣至锁紧。

7.打开电源开关，
电量显示屏幕启动。

二、折叠车身

*要折叠时请先关闭电源开关。

1.向后拉动折叠按制扣。

2.竖起折叠按制扣并用力往下压折叠按制扣，
同时放下左右车把、然后松开折叠按制扣。

3.向上提连接固定套，并且向后折叠直筒。

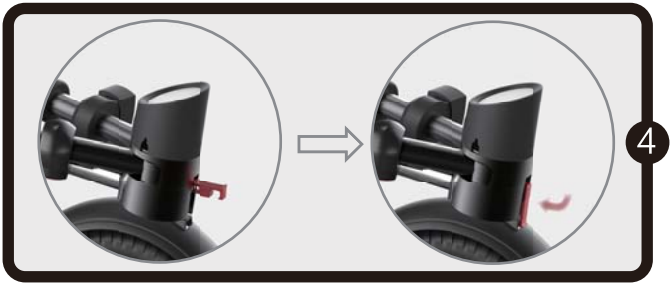

4.将折叠按制扣拉出钩住后挡泥盖

5.折叠完成图

四、电源开关

电量显示器(下图)

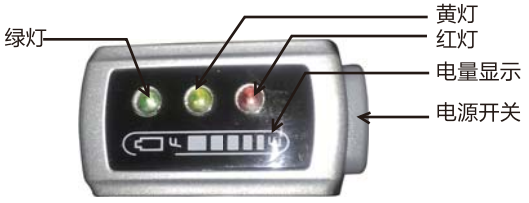

1. 按下电源开关，电源打开，再次按下电源开关，电源关闭。
2.红色指示灯亮表示电量为0~10%，黄色指示灯亮表示电量为10%~50%，绿色指示灯亮表示电量为50%~100%。

五、骑行操作

（一）、常规操作

1.选择平坦宽阔场地并展开车身，检查各部件是否展开到位，按下电源开关并将支撑脚向上提起。

2.本品有两种起步模式，原地启动模式和滑行启动模式，可通过手机APP切换（详见APP操作指南），出厂默认配置为滑行启动模式。

原地启动模式：轻压加速器即可行驶；

滑行启动模式：需要将整车滑行一段距离后，在滑行中轻压加速器即可。

3. 车速通过调速把调节，调速把拨动的角度越大，车子就跑的越快。

4. 需要停车或减速时，按下P 键即可。遇紧急情况，应按下P 按键的同时踩下后挡泥盖进行紧急刹车。

5. 车灯：具备自动开启模式

在骑行中，遇到光线不足（天黑等）时，前大灯将自动亮起；停车不骑行(含推车) 25秒后，前大灯将自动关闭，无需人工干预。

6. USB充电：车头灯底部提供5V/1A的手机充电功能。

（二）、APP操作部分：

客户端APP“Powerocks”操作方法：

A: 手机扫描二维码下载客户端软件Powerocks(或者进入Google Play下载安卓版本(要求安卓系统版本4.3以上)，或者进入apple store 下载苹果版本(要求iOS 8.0以上)。在中国大陆地区，也可以进入奇虎360手机软件助手下载安卓版本)。

B: 通过扫描二维码 进行下载和安装app。

1.点击图标 进入app，如下图所示:

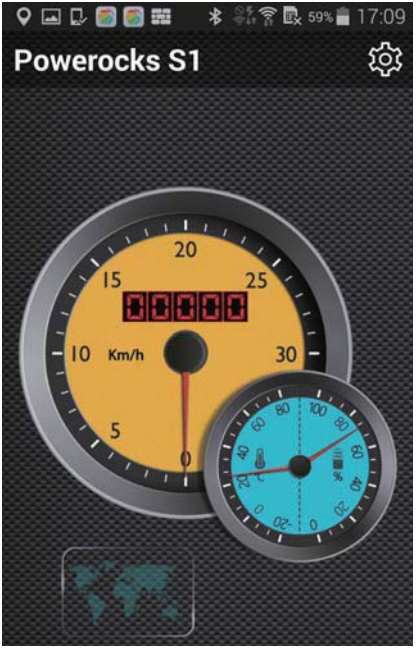

2.连接操作：点击右侧右上角 ，选择蓝牙连接，找到车身的蓝牙节点，点击节点，输入配对连接密码，默认密码是000000.连接OK后会显示“已连接”。

3.修改密码和名称：
结点连接完成后，可以再次点击结点修改密码和蓝牙节点名称，（如果万一忘记密码，请单击车头按键15秒以上复位），如下图所示。

4.主界面功能：点击上图右上角 返回主界面，主界面黄色仪表盘是速度表，蓝色仪表盘是电量显示表。

5.系统设置功能：点击主界面 ，再点击“系统设置”，进入系统设置功能界面，也可以在主界面滑动进入系统设置功能界面。进入系统设置页面点击相应功能后，开关图标会点亮，如下图所示：

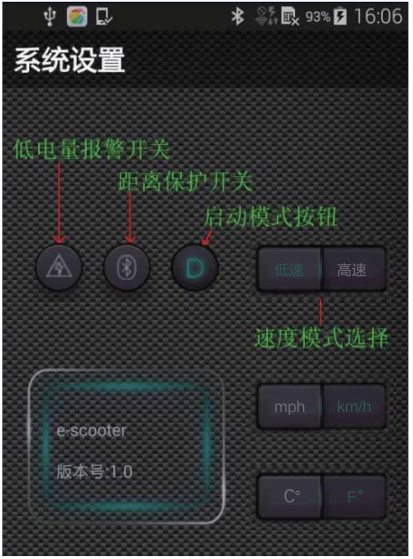

A> 低电量报警功能：当电动滑板车电量低于20%时，APP会提醒用户及时充电。
B> 距离保护功能：当您打开APP、蓝牙连接成功，并且手机随身携带，如果距离电动滑板车超过15米左右时，手机会自动报警，提醒用户注意防止丢失
C> 启动模式选择功能：点击按钮可以切换启动模式，按键显示S时，为滑行启动模式，显示D时为原地启动模式。

D> 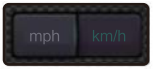

和 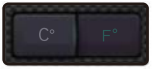

分别是速度单位和温度单位的切换按钮。

六、充电说明

锂电池 ： 建议消费者长期不使用时，每隔60天充电一次。

充电器 ： 请使用原装智能充电器，当充电器红色灯亮表示电池正在充电，当充电器绿色灯亮时表示电池充满电。

七、保养

放置

请放置在阴凉干燥处，避开水源，热源。

润滑

每六个月需要在折叠部件内使用少量的润滑油或润滑剂做保养。

轮胎

本产品采用八寸充气轮胎，当有磨损时需要更换，请及时更换。当胎压不足时，请及时充气。

八、产品规格与参数

型号		S1
产品规格	外形尺寸	长960mm宽498mm高1093mm
	折叠尺寸	长960mm宽180mm高361mm
	整车重量	11.5kg
产品性能	最大载重	120kg
	最高时速	20km/h
	续航里程	40km
电池参数	电池类型	锂离子
	电池电压	24V
	电池容量	10Ah
电机参数	电机类型	直流无刷电机
	电机功率	350W
	电机电压	24V
轮胎	类型	充气轮胎
	规格	8寸
充电器参数	输入电压	AC 220V
	输出电流	2A
	充电时间	4-4.5小时

九、一般故障排解

当产品无法正常操作时，请检查下列各项是否已完成：

●电源已打开。

●电量显示还有剩余电力。

●所有的插孔和连接头都是清洁的状态并准确的连接。

如果以上各项已完成但产品依然无法正常操作，请洽询产品制造商。

十、安全须知

◆ 16岁以上的成年人可单独乘骑本产品,16岁以下的未成年人需要在监护人陪同下使用。

◆ 乘骑时请做好安全防护，佩戴头盔、护膝等。

◆ 使用本产品前，请仔细阅读使用说明书。

◆ 乘骑本产品时请遵守交通规则，请勿超载或危险驾驶。

◆ 切勿在表面有水、有油或冰的地形上骑乘本产品。

◆滑板车高速行驶中或车速高于5KM/小时时，切勿强行下车，以防惯性摔伤。

十一、警告

警告：

不遵循这些安全说明可能会导致起火、触电、损坏或者其他伤害。

保修卡

用户姓名		电话		邮编	
通讯地址					
产品型号		制造商 盖　章	检验合格 QC-PASS		
产品编号					
购买日期					

三包零部件范围及期限

序号	名称		三包期	维修故障说明
1	电机	无刷直流电机	12个月	性能故障，电机无法工作
2	电池	锂电池	24个月	电池不能充放电。
3	电器件	控制器	12个月	涉水、危险驾驶不保
		调速把		涉水、危险驾驶不保
		充电器		性能故障
4	结构件	车架	12个月	断裂，开焊
		车把		发泡，裂开
		后轮		断裂，开焊，变形，轴承跑位
5	附件	LED大灯，尾灯，后刹车盖	12个月	性能故障

维修记录

日期	故障填写	处理内容	维修电话	维修员签名

※ 此保修卡在购买本公司产品时立即填写；
※ 此保修卡请妥善保存；
※ 要求更换或维修时请出示此卡。
※ 本保修卡仅供中国大陆地区使用。
※ 本保修凭证所有内容解释权归本公司所有。

真诚感谢使用POWEROCKS产品!

此产品已通过严格的质量检验，根据本保修卡保修说明，凡在正常使用下由于产品本身质量问题引起的硬件故障，在保修期间，我们将负责给予免费维修。欲了解更多，请登录www.powerocks.com.cn咨询，谢谢！

保修条件：

需要保修服务时，请出示本保修卡，并请详细填写相关内容。本公司向宝格石用户提供的自产品购买之日起十二个月的保修期。

保修范围：

在正常使用的状态下出现的质量问题，非外力破坏造成的损坏：产品维修期间因无法使用该产品而造成的不便或损失，本公司不承担任何责任，原则上产品属于保修期间的用户不支付费用，但若人力损坏将酌情收取检测或零配件费用，产品超出保修期的一律收费。

以下情况将不能享受保修：人为损坏，如因使用不当造成的破坏，外观不正常磨损、摔伤、电路烧毁、挤压变形、异物进入、受潮、产品上的密封标签被涂改或撕毁，以及其他任何可见之人为损坏。另外如无产品保修卡和有效购买凭证（发票）的，又无法查证用户信息档案的；产品条码被撕毁的；无法查证购买日期的；超过质保期限。其他情况如因用户自身原因（擅自拆装修改、使用不慎、操作不当、进水等人为情况）所造成的损坏。因不可抗力造成的损坏，如地震、水灾、火灾、飓风或战争等。

制造商：创明新能源股份有限公司
地　址：广东省东莞市松山湖高新技术产业开发区工业西三路9号
电　话：+86-769-2289-1000

24小时服务热线

400-652-2535

宝格石官方网站：www.powerocks.com.cn

Powerocks

S1

Smart Electric Scooter

User Guide

Thank you for buying our product!
For your convenience, please read
this manual carefully and follow the
steps below to operate the product.

Ⅰ、Parts of Powerocks S1 Scooter

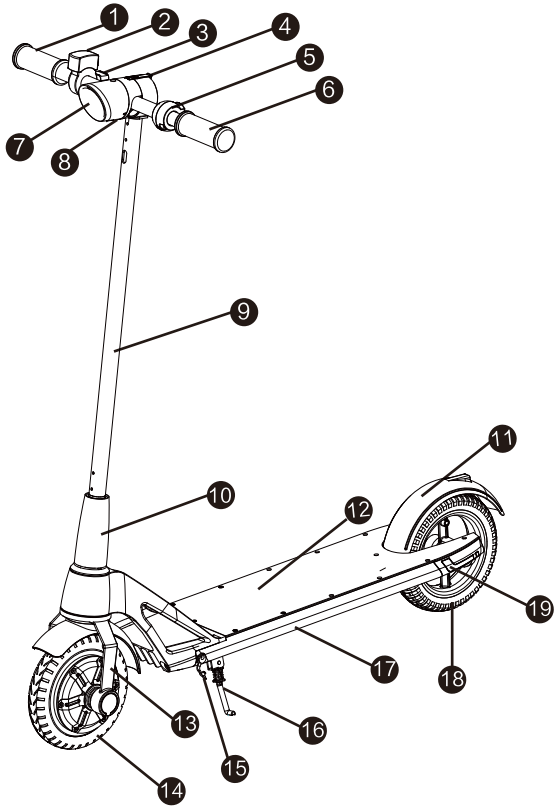

In the figure above:

1. Right handle; 2. Power display; 3. Speed adjustor 4. Fold & Control button; 5. Electric brake; 6. Left handle; 7. Head light; 8.USB interface(5V/1A); 9. Straight rod; 10. Fixing sheath; 11. Foot brake(back fender); 12. Base cover; 13. Fork; 14. Drive wheel; 15. DC interface; 16. Support; 17. Underbody; 18. Driven wheel; 19. Left rear light

II、Unfold Scooter

1.Unlock the Fold & Control button.

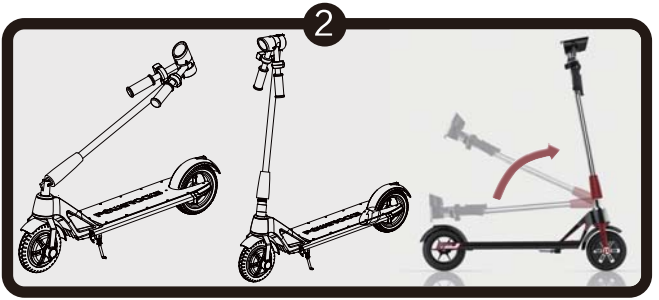

2.Raise up the straight rod

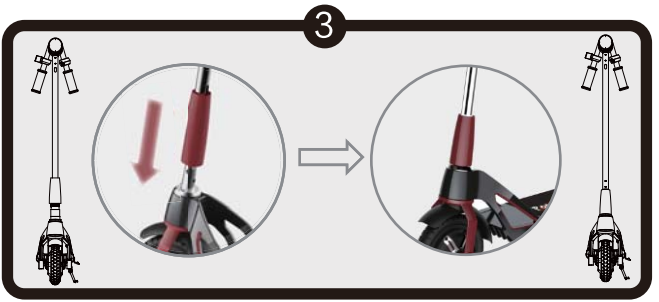

3.Connect the straight rod with the body via the fixing sheath.

4. Pull back and raise up the Fold & Control button.

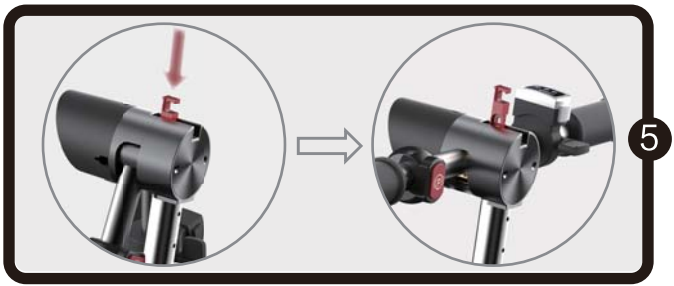

5.Press and hold the Fold & Control button
and raise the left and right handles to
horizontal level. Release the button.

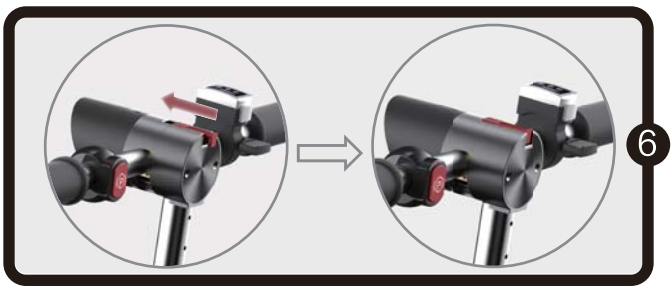

6.Move the Fold & Control button to horizontal
level and push the button to Lock state.

7.Turn on the power switch and the power display is started up.

III、Fold Scooter

*Before folding the scooter, please turn off the power switch first.

1.Pull the Fold & Control button back.

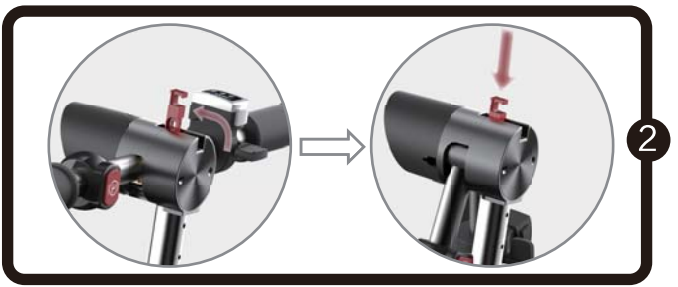

2.Raise up and press and hold theFold & Control button.
Fold the left and right handles back and then release the button.

3.Raise the fixing sheath and fold the straight rod back.

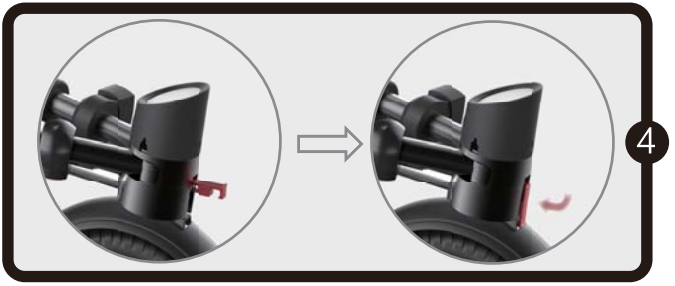

4.Pull out the Fold & Control button and hook to the rear fender.

5.The figure shows the scooter after it is folded.

Ⅳ、Power Switch

Power display (see the following figure)

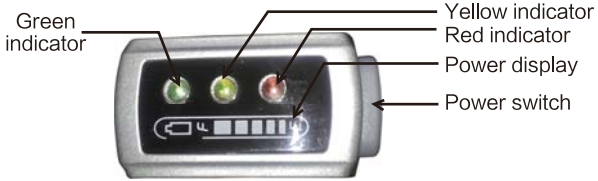

1. Press the power switch to turn on the power and press the switch again to turn off the power. 2.The red indicator indicates remaining battery 0~10%;The yellow indicator indicates remaining battery 10%~ 50%. The green indicator indicates remaining battery 50%~100%.

Ⅴ、How to Drive the Scooter

(1) Conventional Operation

1.Choose a flat place and unfold the scooter. Check whether various parts of the scooter are correctly unfolded. Press the power switch to turn on the power and raise up the support at the bottom of the scooter.

2.The scooter can be started up in two modes: in-situ mode and sliding mode. Use the special smartphone App (for details on the App, refer to the following sections) to switch between the two modes. By default, the scooter is started up by sliding.
In in-situ mode: press the accelerator to start up the scooter.
In sliding mode, slide the scooter for a certain distance and then press the accelerator to start up the scooter.
3.Driving speed can be changed using the speed adjustor. The more you adjust, the quicker the scooter runs.
4.To brake or slow down the scooter, press P. In case of an emergency, tread the foot brake when pressing P to make a quick stop.
5. The head light：automatical mode
During riding , when the environment become dark，the light will turn on automatictly,after you stop your EV-scooter ,and 25 seconds later ,the light will turn off automatically.this does not require people to operate ,is a type of automatic control.

6.The scooter can be charged using a smartphone over a USB interface at the bottom of the headlight .(specifications: 5V/1A).

(2) App Operation:

Smartphone App "Powerocks" operation method:
A: There are various means to download Powerocks:
Scan the QR code to download Powerocks;
Enter Google Play to download Powerocks (for Android users; version requirement: 4.3 or later);
Enter Apple Store to download Powerocks (for iPhone users; version requirement: iOS 8.0 or later);
For users in Mainland of China, they can also enter Qihu 360 App to download Powerocks that supports Android.

B: Scan the QR code to download and install Powerocks.

1. Tap to enter Powerocks, as shown in the following figure:

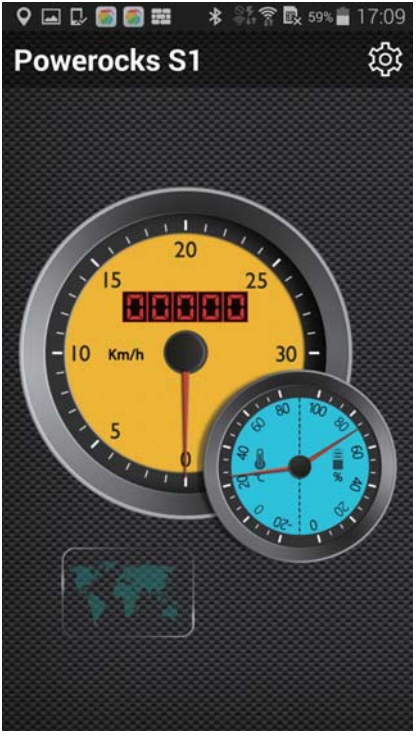

2. Tap and select Bluetooth connection. Search for the scooter device and tap the device. Enter the default password 000000 and tap OK. "Connected" will be shown.

3. Change password and name. Tap the device again to change the password and name of the device. If the password is forgotten, press and hold the head button for fifteen seconds to reset the password.

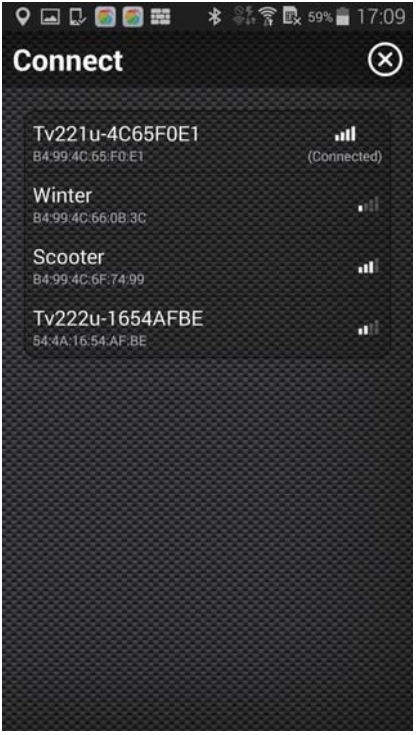

4. Tap to return to the main page. A yellow speed dashboard is shown. A blue dashboard is a power dashboard.

5. Tap and tap "System setting" to enter system setting page.

Alternatively, flick on the main page to enter system setting page. Tap a required function on the system setting page and the function icon will be lit on, as shown in the following figure:

A> Low battery alarm function: when the power capacity of the scooter is less than 20%, Powerocks will remind users of charging the scooter.
B> Distance protection function: when the distance between the scooter and the smartphone you carry exceeds 15m, the smartphone will automatically alarm to reminds users of risk of loss, provided that the Powerocks function has been enabled and Bluetooth connection is successful.

Alternatively, flick on the main page to enter system setting page. Tap a required function on the system setting page and the function icon will be lit on, as shown in the following figure:
C> Start mode selection function: tap this button to switch startup mode. If the button is S, sliding mode is enabled; if the button is D, in-situ mode is enabled.

D> The buttons 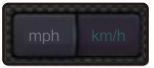

and 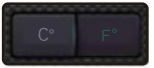

are used for switching speed units and temperature units.

VI、Charging Description

Lithium battery

If the scooter will be set aside for a long period of time, fully charge the battery every two months.

Charger

Please use the original charger. The red indicator indicates that the battery is being charged; the green indicator indicates that the battery has been fully charged.

VII、 Maintenance

Placement

Place the scooter in shady dry place and avoid water source and hot source.

Lubrication

Use a small amount of lubricating oil or other lubricant to lubricate the foldable parts of the scooter every six months.

Tires

The scooter uses 8-inch pneumatic tires. If the tires are worn out and need replacement, replace them immediately. If the tire pressure is insufficient, fill the tires with gas.

VIII、Product Specifications and Parameters

Model		S1
Specifications	Dimensions	960mm(L)x498mm(W)x1093mm(H)
	Dimensions (after folding)	960mm(L)x180mm(W)x361mm(H)
	Weight	11.5kg
Performance	Maximum load	120kg
	Maximum speed	20km/h
	Navigation mileage	40km
Battery	Battery type	lithium-ion
	Voltage	24V
	Capacity	10Ah
Motor	Motor type	DC brushless motor
	Power	350W
	Voltage	24V
Tire	Type	Fillable type
	Specifications	8 inches
Charger	Input voltage	AC 220V
	Output current	2A
	Charge time	4-4.5hours

IX、Troubleshooting

If the scooter cannot run normally, check whether:

- The power switch is turned on.
- Battery capacity is sufficient.
- All plugs and connectors are clean and correctly connected.

If no problem is found after the check, contact the manufacturer.

X、Safety Precautions

◆ Adults over the age of 16 can driving this scooter alone, minors under the age of 16 need to be accompanied by a guardian.

◆ When driving this scooter,please do safety protection, wearing a helmet, knee pads, etc.

◆Please read carefully the instructions before driving this scooter.

◆When driving this scooter, please obey the traffic rules, please do not overload or dangerous driving.

◆Do not pass wet, oily, or icy road.

◆When driving speed is higher than 5 km/h, do not get off the scooter to avoid inertial fall.

XI、Warnings

Warning: failure to follow these safety instructions may result in a fire, electric shock, damage, or other injuries.

CAUTON:

(a) Changes or modifications not expressly approved by the party responsible for compliance could void the user's authority to operate the equipment.

(b) For a Class B digital device or peripheral, the instructions furnished the user shall include the following or similar statement, placed in a prominent location in the text of the manual:

NOTE: This equipment has been tested and found to comply with the limits for a Class B digital device, pursuant to part 15 of the FCC Rules. These limits are designed to provide reasonable protection against harmful interference in a residential installation. This equipment generates, uses and can radiate radio frequency energy and, if not installed and used in accordance with the instructions, may cause harmful interference to radio communications. However, there is no guarantee that interference will not occur in a particular installation. If this equipment does cause harmful interference to radio or television reception, which can be determined by turning the equipment off and on, the user is encouraged to try to correct the interference by one or more of the following measures:

—Reorient or relocate the receiving antenna.

—Increase the separation between the equipment and receiver.

—Connect the equipment into an outlet on a circuit different from that to which the receiver is connected.

—Consult the dealer or an experienced radio/TV technician for help.

Warranty card

Name		Tel.		Postcode	
Address					
Product model				Manufacturer	12 Months Warranty 检验合格 QC-PASS
Product code					
Purchase date					

Warranted parts and warranty period

SN	Name		Warranty period	Faults
1	Motor	Brushless DC motor	12 months	Performance fault,The motor cannot run.
2	Battery	Lithium battery	24 months	The battery cannot charge or discharge
3	Electric parts	Controller	12 months	Any fault that is caused by damping or dangerous driving is not of the warranty range
		Speed adjustor		Any fault that is caused by damping or dangerous driving is not of the warranty range
		Charger		Performance fault
4	Structural parts	Bracket	12 months	Break or joint interrupt
		Handle		Foaming, break
		Rear wheel		Break, joint interrupt, deformation, bearing displacement
5	Accessories	LED light, rear light, rear brake cover	12 months	Performance fault

Maintenance Record

Date	Fault description	Processing method	Hotline to request maintenance	Signed by maintenance personnel

※ This warranty card shall be filled immediately when the product is purchased.
※ Please keep well this warranty card.
※ To require free replacement or maintenance, please offer this warranty card.
※ This warranty card is valid within mainland of China only.
※ The final explanation right for this warranty card belongs to Powerocks.

Thank you for using Powerocks products!
This product has passed strict quality test. According to the warrnty provisions under the warranty card, any hardware fault caused due to quality problem will be repaired free of charge, provided that the product is under normal use condition and within the warranty period specified. To learn more information, please visit www.powerocks.com.cn. Thanks!
The warranty period is 12-month long starting from the date of purchase.

Warranty conditions:

To request warranty, offer the warranty card. The card shall be filled with relevant information. Powerocks promises a 12-month long warranty period to users from the date of purchase.

Warranty range:

Any quality problem that is caused due to non-external factors will be covered by the warranty, provided that the product is under normal use condition. Powerocks will not accept any liability for any inconvenience or loss caused due to unavailability of the product during maintenance. Theoretically, users do not need to pay for the maintenance that incurs under the warranty period, except for manmade damage. In this case, Powerocks will charge for the detection or parts required. Products that are in excess of their warranty period will be charged.

The following circumstances are not under the warranty period:

Manmade damage, for example, damage due to improper use, unconventional wear and tear, fall, burnt circuit, squeezing, deformation, foreign object permeation, damping, product label alteration or tearing, as well as any other visible manmade damage.
No warranty card and valid purchase credential (invoice) can be offered and no user information can be searched for; product barcode is torn off; purchase date cannot be certified;The warranty card has expired.
Damage that is caused by other circumstances due to reasons of users, for example, arbitrary disassembly or modification, careless use, misoperation, water permeation; damage that is caused due force majeure, for example, earthquake, flood, fire, hurricane, or battle.

POWEROCKS is a trademark of SHENZHEN CHAM BATTERY TECHNOLOGY CO., LTD.
All rights reserved.
Made in China.

Add : No.9, GongYe West #3 Rd.,Songshan Lake Zone, Dongguan,523808,Guangdong,PRC
Tel : +86-769-2289-1000

Hot Line : 400-652-2535
Web : www.powerocks.com.cn

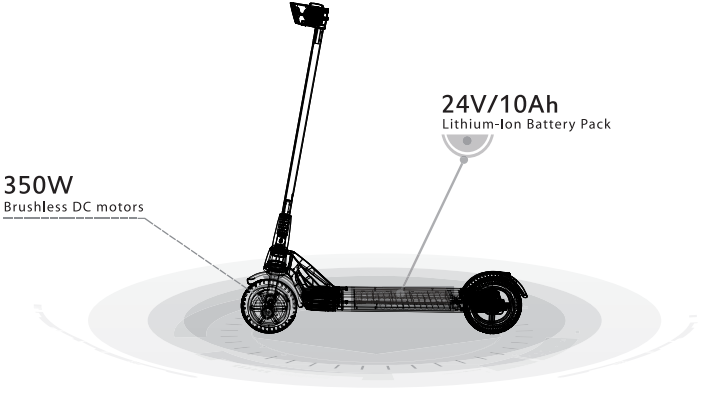

www.powerocks.com.cn

All right reserved