EMC TEST REPORT

FCC 47 CFR Part 15B, ISED ICES-003 Issue 6

Report Reference No	G0M-1802-7246-EF0115B-V01
Testing Laboratory	Eurofins Product Service GmbH
Address	Storkower Str. 38c 15526 Reichenwalde Germany
Accreditation	A2LA Accredited Testing Laboratory, Certificate No.: 1983.01 FCC Filed Test Laboratory, Reg.-No.: 96970 IC Testing Laboratory site: 3470A-2
Applicant	TomTom Telematics B.V.
Address	De Ruijterkade 154 1011 AC Amsterdam NETHERLANDS
Test Specification	Full compliance test
Standard	47 CFR Part 15 Subpart B ISED ICES-003 Issue 6 ANSI C63.4:2014
Non-Standard Test Method	None
Equipment under Test (EUT):	
Product Description	Telematics Device with Bluetooth
Model(s)	L0101
Additional Model(s)	None
Brand Name(s)	LINK 100, LINK 105
Hardware Version(s)	rbn_0_11_brd
Software Version(s)	2.1.1362
FCC-ID	2AGPAL0101
IC	20911-L0101
Test Result	**PASSED**

Possibe test case verdicts:		
required by standard but not tested	N/T	
not required by standard	N/R	
required by standard but not appl. to test object	N/A	
test object does meet the requirement	P(PASS)	
test object does not meet the requirement	F(FAIL)	
Testing:		
Date of receipt of test item	2018-03-10	
Report:		
Compiled by	Jens Marquardt	
Tested by (+ signature) (Responsible for Test)	Jens Marquardt	.....
Approved by (+ signature) (Test Lab Engineer)	Jens Zimmermann	.....
Date of Issue	2018-04-24	
Total number of pages	23	
General Remarks:		
The test results presented in this report relate only to the object tested. **The results contained in this report reflect the results for this particular model and serial number. It is the responsibility of the manufacturer to ensure that all production models meet the intent of the requirements detailed within this report.** This report shall not be reproduced, except in full, without the written approval of the Issuing testing laboratory.		
Additional Comments:		

ABBREVIATIONS AND ACRONYMS

Acronyms	
Acronym	Description
EUT	Equipment Under Test
FCC	Federal Communications Commission
ISED	Innovation, Science and Economic Development Canada
T_{NOM}	Nominal operating temperature
V_{NOM}	Nominal supply voltage

VERSION HISTORY

Version History			
Version	Issue Date	Remarks	Revised By
01	2018-04-24	Initial Release	

REPORT INDEX

1 Equipment (Test Item) Under Test 6
1.1 Equipment Ports 6
1.2 Equipment Photos - Internal 7
1.3 Equipment Photos - External 9
1.4 Support Equipment 11
1.5 Operational Modes 11
1.6 EUT Configuration 11
1.7 Sample emission level calculation 12
2 Result Summary 13
2.1 Test Conditions and Results - Radiated emissions acc. to ANSI C63.4 14

1 Equipment (Test Item) Under Test

Description	Telematics Device with Bluetooth	
Model	L0101	
Additional Model(s)	None	
Brand Name(s)	LINK 100, LINK 105	
Serial Number(s)	None	
Hardware Version(s)	rbn_0_11_brd	
Software Version(s)	2.1.1362	
FCC-ID	2AGPAL0101	
IC	20911-L0101	
Class	Class B	
Equipment type	Table top	
Highest internal frequency [MHz]	2480	
Supply Voltage	V_{NOM}	12/24 VDC
Manufacturer	TomTom Telematics B.V. De Ruijterkade 154 1011 AC Amsterdam NETHERLANDS	

1.1 Equipment Ports

Name	Type	Attributes		Comment
DC Power	DC	Count: Direction: Service only:	1 In No	
CAN	IO	Count: Direction: Service only:	1 IO No	
Description:				
AC	AC mains power input/output port			
DC	DC power input/output port			
IO	Input/Output port			
TP	Telecommunication port			
NE	Non-electrical port			

1.2 Equipment Photos - Internal

EUT Front

EUT Back

EUT Label
TOMTOM TELEMATICS Model: L0101 4K1A.156.00 E1 10R-047155 CE R-NZ E4935 E4 04 39 70 CB 57 11 MADE IN CHINA MU5038100021 1 cm 1 cm

1.3 Equipment Photos - External

EUT PCB 1 Side 1

EUT PCB 1 Side 2
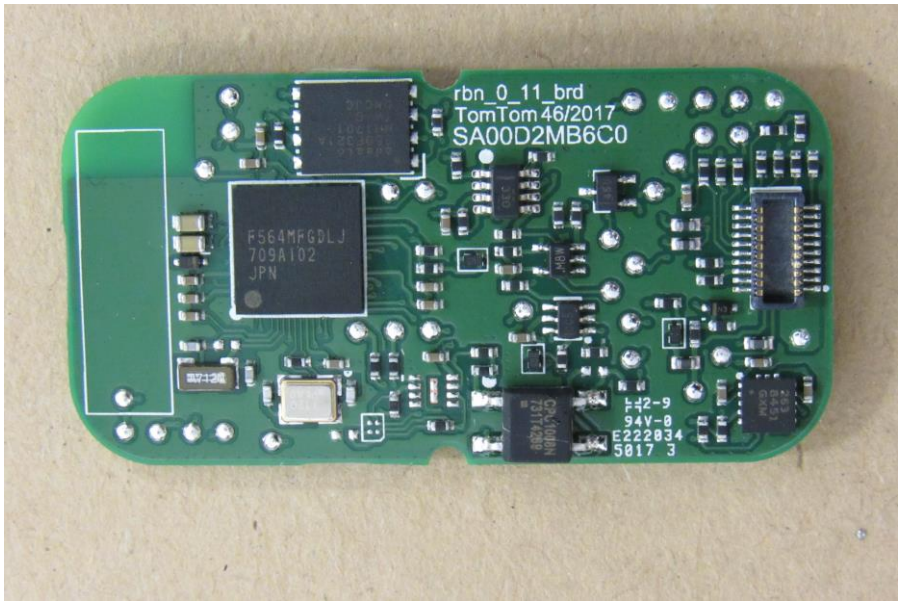

EUT PCB 2

1.4 Support Equipment

Product Type	Device	Manufacturer	Model	Comment
AE	Notebook	Lenovo	T440	
AE	USB-to-CAN-converter	IXXAT Automation GmbH	USB-to-CAN compact	
Description:				
AE	Auxillary Equipment			
SIM	Simulator			
CBL	Connecting Cable			
Comment:				

1.5 Operational Modes

Mode #	Description
1	CAN Communication, Bluetooth Loopback (data send to EUT are send back to notebook)
Comment:	

1.6 EUT Configuration

Configuration #	Description
1	EUT powered via DC, CAN connect to USB-CAN converter
Comment:	

1.7 Sample emission level calculation

The following is a description of terms and a sample calculation, as appears in the radiated emissions data table. The numbers used in the calculation are for example only. There is no direct correlation to the specific data taken for the product described in this document:

Reading:

This is the reading obtained on the spectrum analyzer in dBµV. Any external preamplifiers used are taken into account through internal analyzer settings.

A.F.:

This is the antenna factor for the receiving antenna. It is a conversion factor, which converts electric fields strengths to voltages, which can be measured directly on the spectrum analyzer. It is treated as a loss in dB. Cable losses have been included with the A.F. to simplify the calculations. The antenna factor is used in calculations as follows:

Reading on Analyzer (dBµV) + A.F. (dB) = Net field strength (dBµV/m)

Net:

This is the net field strength measurement (as shown above).

Limit:

This is the FCC Class B radiated emission limit (in units of dBµV/m). The FCC limits are given in units of µV/m. The following formula is used to convert the units of µV/m to dBµV/m:

Limit (dBµV/m) = 20*log (µV/m)

Margin:

This is the margin of compliance below the FCC limit. The units are given in dB. A negative margin indicates the emission was below the limit. A positive margin indicates that the emission exceeds the limit.

Example only:

Reading + AF	= Net Reading	:	Net reading	- FCC limit	= Margin
+21.5 dBµV	+ 26 dB = 47.5 dBµV/m	:	47.5 dBµV/m	- 57.0 dBµV/m	= -9.5 dB

2 Result Summary

FCC 47 CFR Part 15B, ISED ICES-003 Issue 6				
Reference	**Requirement**	**Reference Method**	**Result**	**Remarks**
Emission				
FCC 15.109 ICES-003, 8, 6.1	Radiated emissions	ANSI C63.4:2014	PASS	
FCC 15.107 ICES-003, 8, 6.2	AC power line conducted emissions	ANSI C63.4:2014	N/R	
Comment:				

Possible Test Case Verdicts	
PASS	Test object does meet the requirements
FAIL	Test object does not meet the requirements
N/T	Required by standard but not tested
N/R	Not required by standard for the test object

2.1 Test Conditions and Results - Radiated emissions acc. to ANSI C63.4

2.1.1 Information

Test Information	
Reference	FCC 15.109, ICES-003, 8, 6.1
Reference method	ANSI C63.4:2014 Section 8
Equipment class	Class B
Equipment type	Table top
Highest internal frequency [MHz]	2480
Measurement range	10 MHz to 12400 MHz
Temperature [°C]	25
Humidity [%]	39
Operator	Jens Marquardt
Date	2018-04-18

2.1.2 Setup

Measurement up to 1 GHz

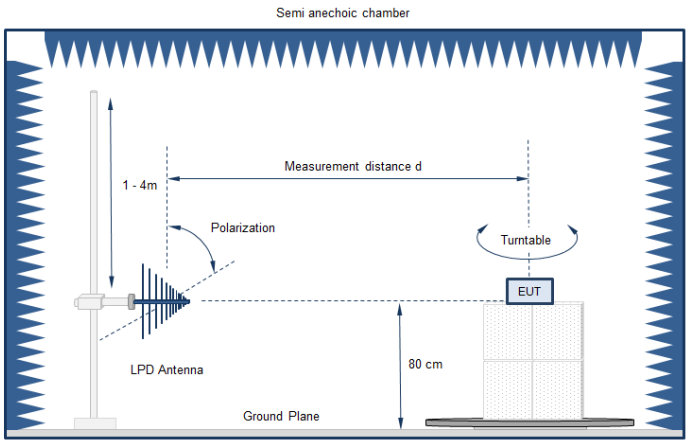

Measurement above 1 GHz

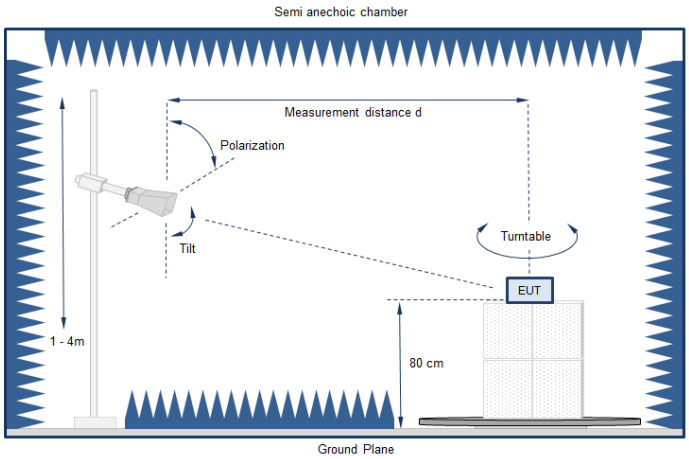

Equipment placement - Table top

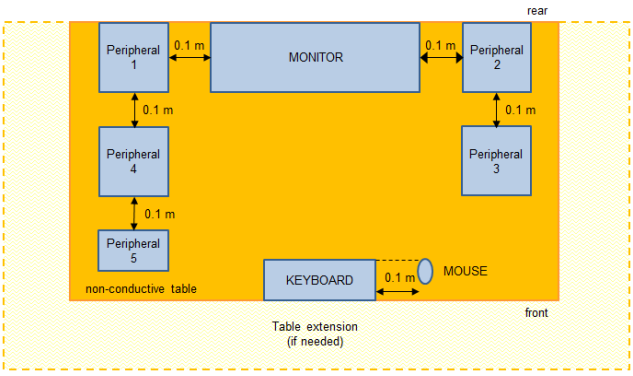

Test Setup

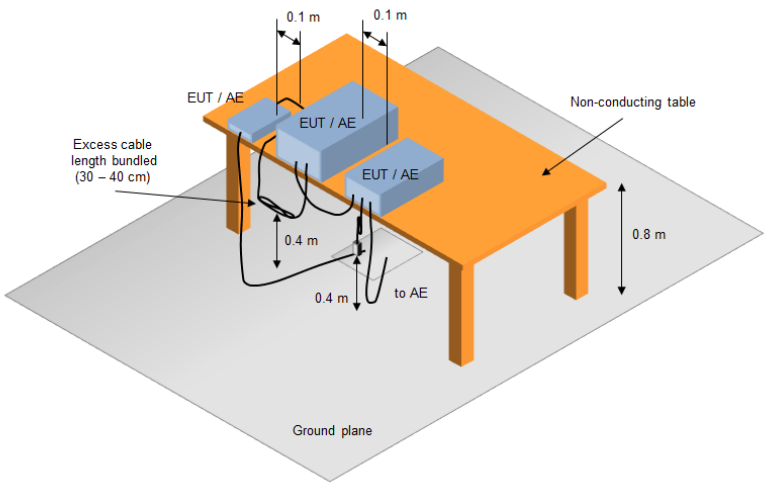

2.1.3 Equipment

Test Equipment					
Description	Manufacturer	Model	Identifier	Cal. Date	Cal. Due
Anechoic chamber	Frankonia	AC1	EF00200	functional test	functional test
Keysight	EMI Test Receiver	N9038A-526/WXP	EF01070	2017-08	2018-08
R&S	Biconical Antenna	HK 116	EF00186	2018-03	2020-03
R&S	LPD Antenna	HL 223	EF00187	2016-05	2019-05
ETS-Lindgren	Horn Antenna	3117	EF01256	2017-07	2018-07

2.1.4 Procedure

Exploratory measurement
1. The EUT was placed on a non-conductive table at a height of 0.8m. 2. The EUT and support equipment, if needed, were set up to simulate typical usage. 3. Cables, of type and length specified by the manufacturer, were connected to at least one port of each type and were terminated by a device or simulating load of actual usage. 4. The antenna was placed at a distance of 3 or 10 m. 5. The received signal was monitored at the measurement receiver. 6. This procedure has to be performed in both antenna polarizations, horizontal and vertical. 7. The arrangement of the equipment with the maximum emission level is shown on the setup picture at item 1.3

Final measurement
1. The EUT was placed on a 0.8 m non-conductive table at a 3 m distance from the receive antenna. The antenna output was connected to the measurement receiver. 2. A biconical antenna was used for the frequency range 30 – 200 MHz, a logarithmic periodical antenna was used for the frequency range from 200 – 1000 MHz. Above one 1 GHz a Double Ridged Broadband Horn antenna was used. The antenna was placed on an adjustable height antenna mast. 3. The EUT and cable arrangement were based on the exploratory measurement results. 4. Emissions were maximized at each frequency by rotating the EUT and adjusting the receive antenna height and polarization. The maximum values were recorded. 5. The test data of the worst-case conditions were recorded and shown on the next pages.

2.1.5 Limits

Class B @ 3 m		
Frequency [MHz]	Detector	Limit [dBµV/m]
30 - 88	Quasi-peak	40
88 - 216	Quasi-peak	43.5
216 - 960	Quasi-peak	46
960 - 1000	Quasi-peak	54
> 1000	Peak Average	74 54

Class A @ 10 m		
Frequency [MHz]	Detector	Limit [dBµV/m]
30 - 88	Quasi-peak	39
88 - 216	Quasi-peak	43.5
216 - 960	Quasi-peak	46.5
960 - 1000	Quasi-peak	49.5
> 1000	Peak Average	69.5 49.5

2.1.6 Results

Test Results			
Operational mode	EUT Configuration	Verdict	Remark
1	1	PASS	

2.1.7 Setup Photos

Test Setup
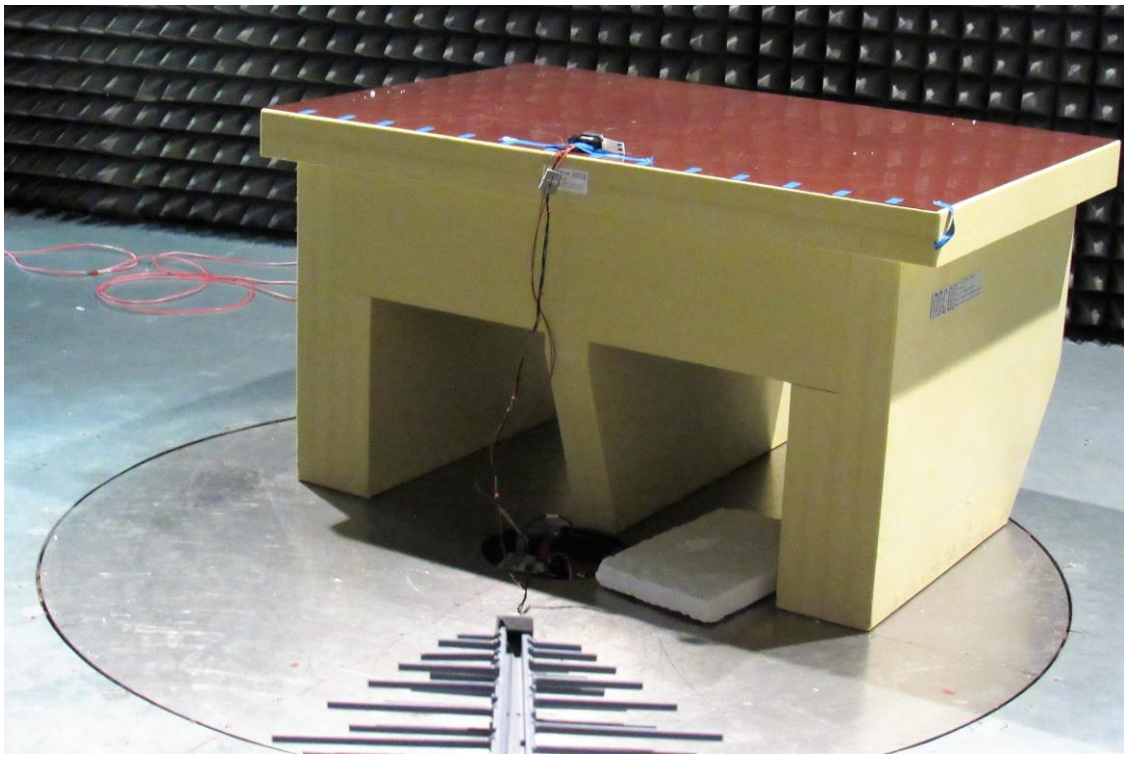

2.1.8 Records

Radiated emissions under normal conditions according to FCC Part 15B

Project number: G0M-1802-7246

Applicant:	TomTom Telematics B.V.
EUT Name:	Telematics Device with Bluetooth
Model:	L0101
Test Site:	Eurofins Product Service GmbH
Operator:	Mr. Marquardt
Test Conditions:	Tnom: 25°C, Unom: 27 VDC
Antenna:	Rohde & Schwarz HK 116, Horizontal
Measurement distance:	3m
Mode:	CAN Communication, Bluetooth loopback (Mode 1)
Test Date:	2018-04-18
Note:	

Index 3

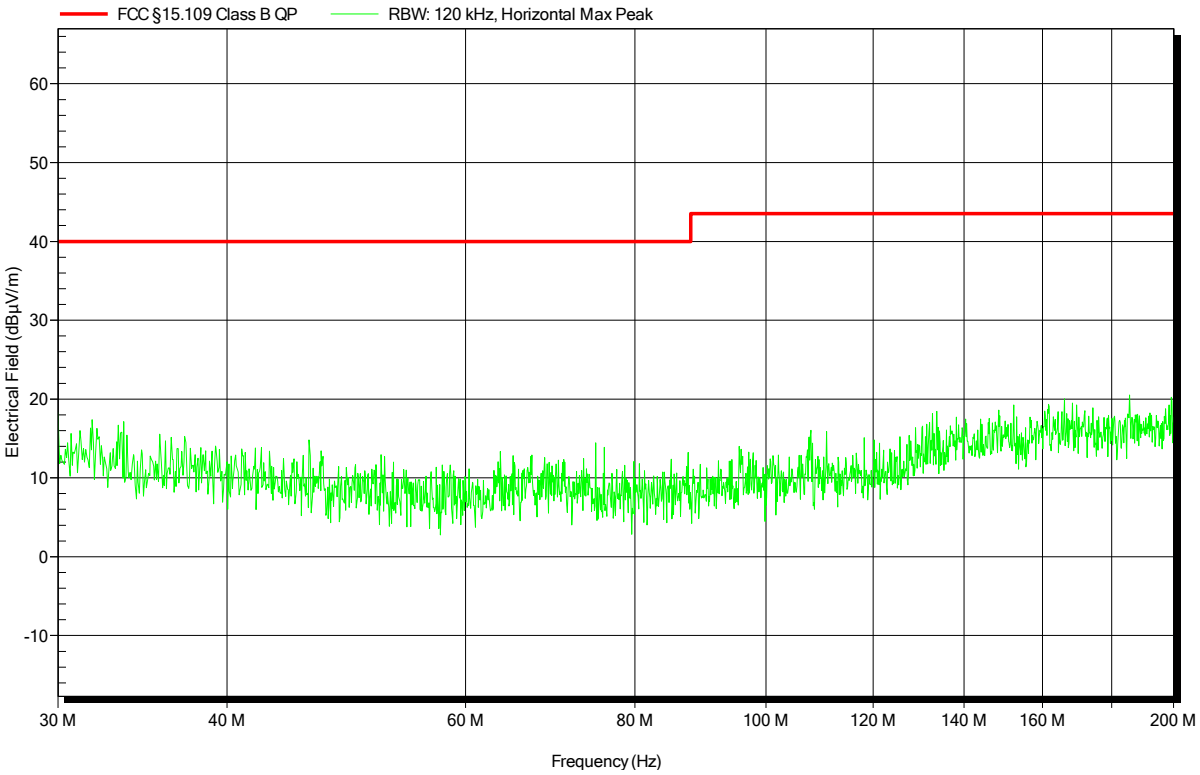

Radiated emissions under normal conditions according to FCC Part 15B

Project number: G0M-1802-7246

Applicant:	TomTom Telematics B.V.
EUT Name:	Telematics Device with Bluetooth
Model:	L0101
Test Site:	Eurofins Product Service GmbH
Operator:	Mr. Marquardt
Test Conditions:	Tnom: 25°C, Unom: 27 VDC
Antenna:	Rohde & Schwarz HK 116, Vertical
Measurement distance:	3m
Mode:	CAN Communication, Bluetooth loopback (Mode 1)
Test Date:	2018-04-18
Note:	

Index 4

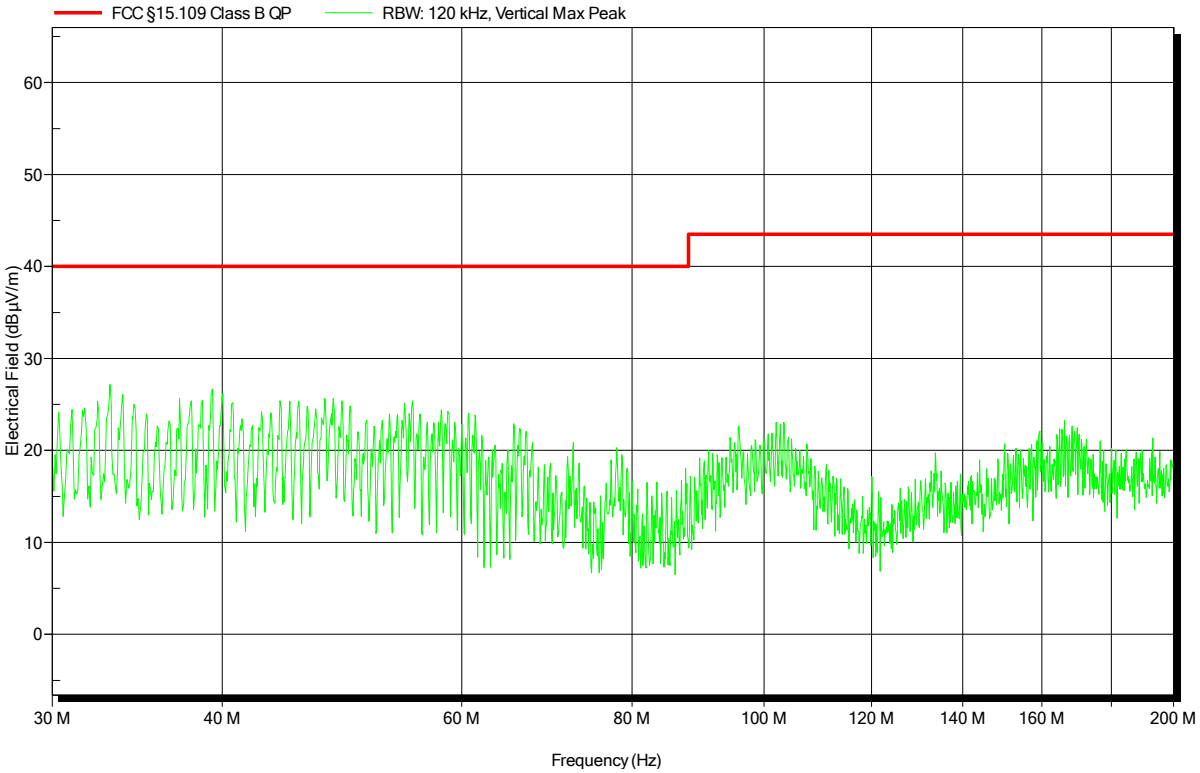

Radiated emissions under normal conditions according to FCC Part 15B

Project number: G0M-1802-7246

Applicant:	TomTom Telematics B.V.
EUT Name:	Telematics Device with Bluetooth
Model:	L0101
Test Site:	Eurofins Product Service GmbH
Operator:	Mr. Marquardt
Test Conditions:	Tnom: 25°C, Unom: 27 VDC
Antenna:	Rohde & Schwarz HL 223, Horizontal
Measurement distance:	3m
Mode:	CAN Communication, Bluetooth loopback (Mode 1)
Test Date:	2018-04-18
Note:	

Index 2

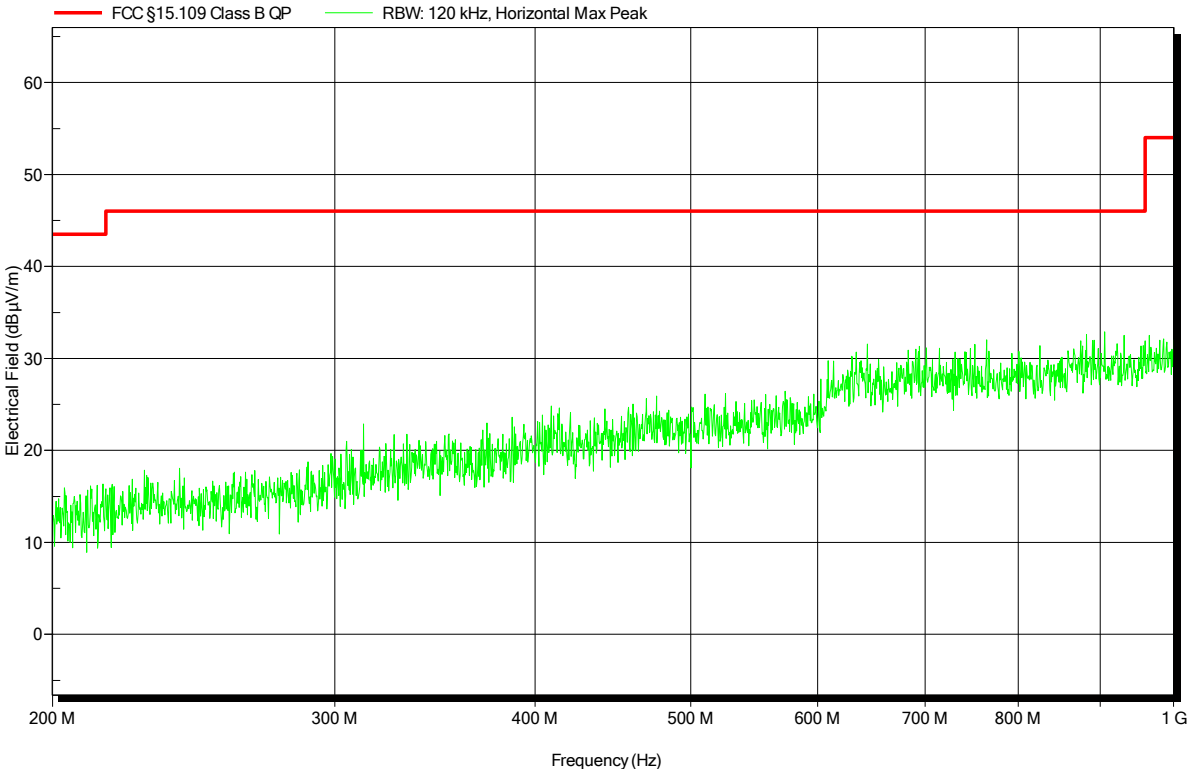

Radiated emissions under normal conditions according to FCC Part 15B

Project number: G0M-1802-7246

Applicant:	TomTom Telematics B.V.
EUT Name:	Telematics Device with Bluetooth
Model:	L0101
Test Site:	Eurofins Product Service GmbH
Operator:	Mr. Marquardt
Test Conditions:	Tnom: 25°C, Unom: 27 VDC
Antenna:	Rohde & Schwarz HL 223, Vertical
Measurement distance:	3m
Mode:	CAN Communication, Bluetooth loopback (Mode 1)
Test Date:	2018-04-18
Note:	

Index 1

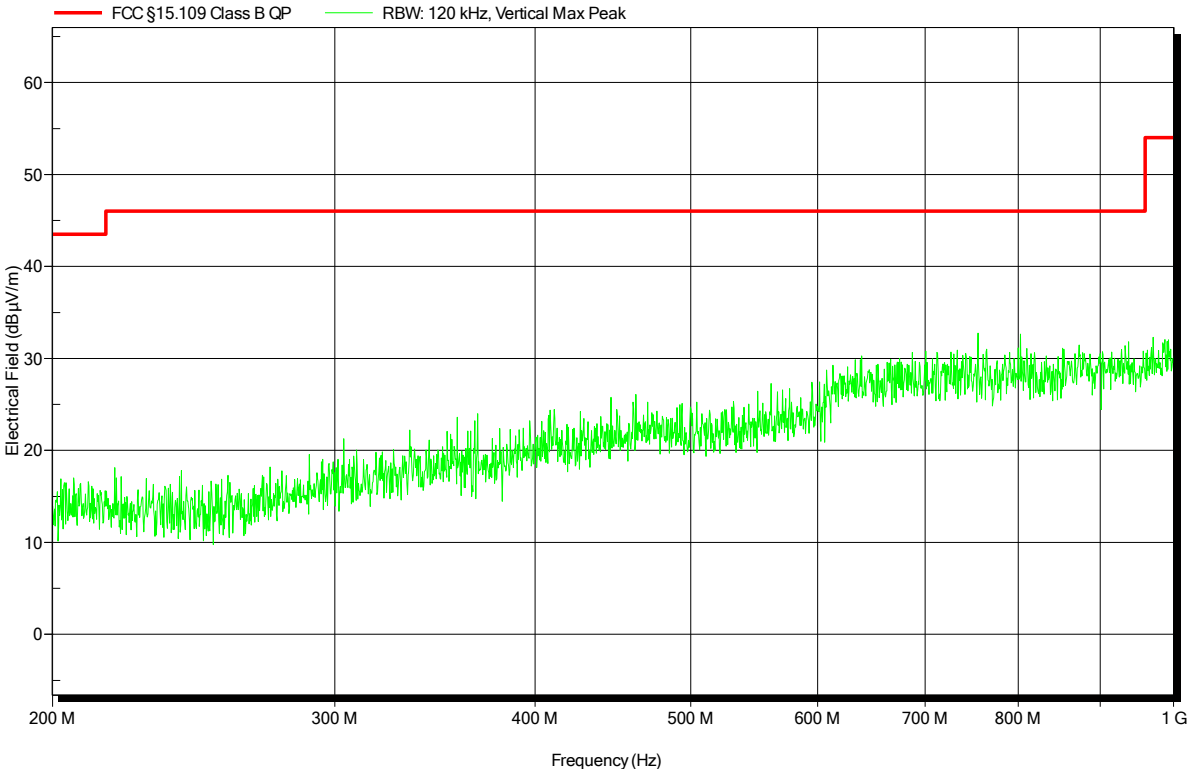

Radiated emissions under normal conditions according to FCC Part 15B

Project number: G0M-1802-7246

Applicant:	TomTom Telematics B.V.
EUT Name:	Telematics Device with Bluetooth
Model:	L0101
Test Site:	Eurofins Product Service GmbH
Operator:	Mr. Marquardt
Test Conditions:	Tnom: 25°C, Unom: 27 VDC
Antenna:	ETS-Lindgren 3117, Horizontal
Measurement distance:	3m
Mode:	CAN Communication, Bluetooth loopback (Mode 1)
Test Date:	2018-04-18
Note:	

Index 6

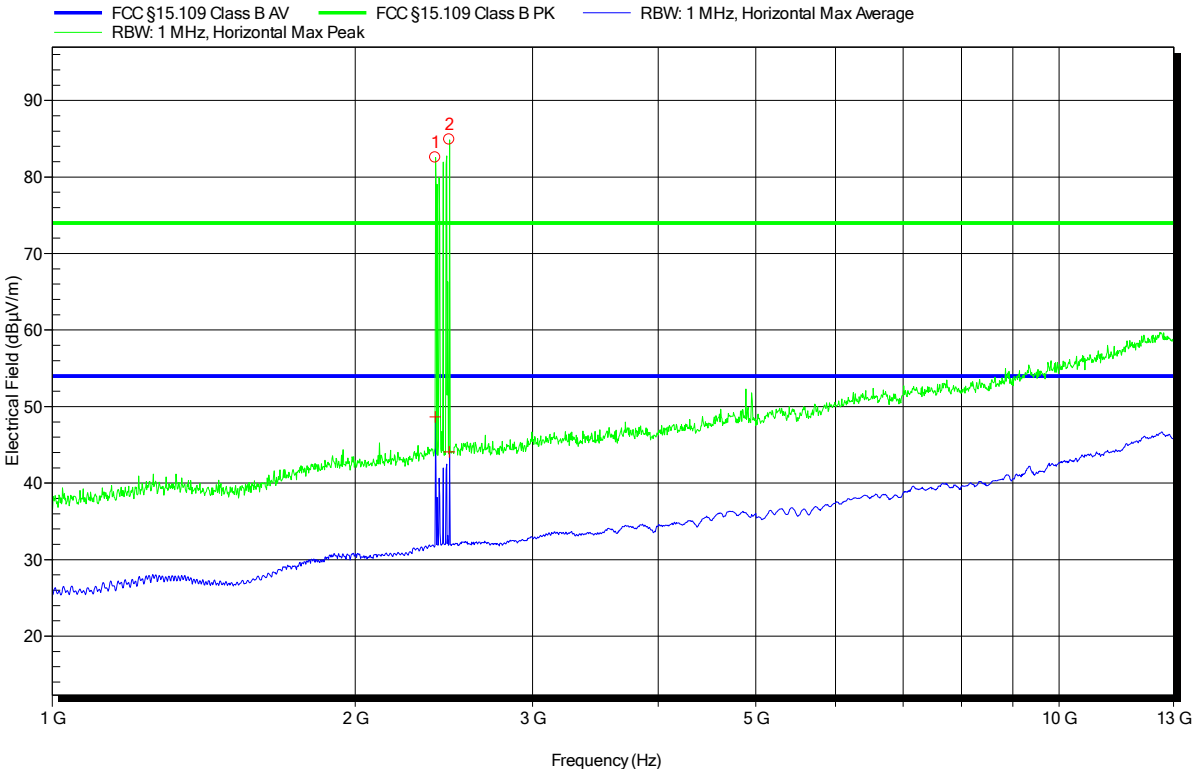

Peak Number	Frequency	Peak	Angle	Height
1	2.402 GHz	BT carrier		
2	2.48 GHz	BT carrier		

Radiated emissions under normal conditions according to FCC Part 15B

Project number: G0M-1802-7246

Applicant:	TomTom Telematics B.V.
EUT Name:	Telematics Device with Bluetooth
Model:	L0101
Test Site:	Eurofins Product Service GmbH
Operator:	Mr. Marquardt
Test Conditions:	Tnom: 25°C, Unom: 27 VDC
Antenna:	ETS-Lindgren 3117, Vertical
Measurement distance:	3m
Mode:	CAN Communication, Bluetooth loopback (Mode 1)
Test Date:	2018-04-18
Note:	

Index 7

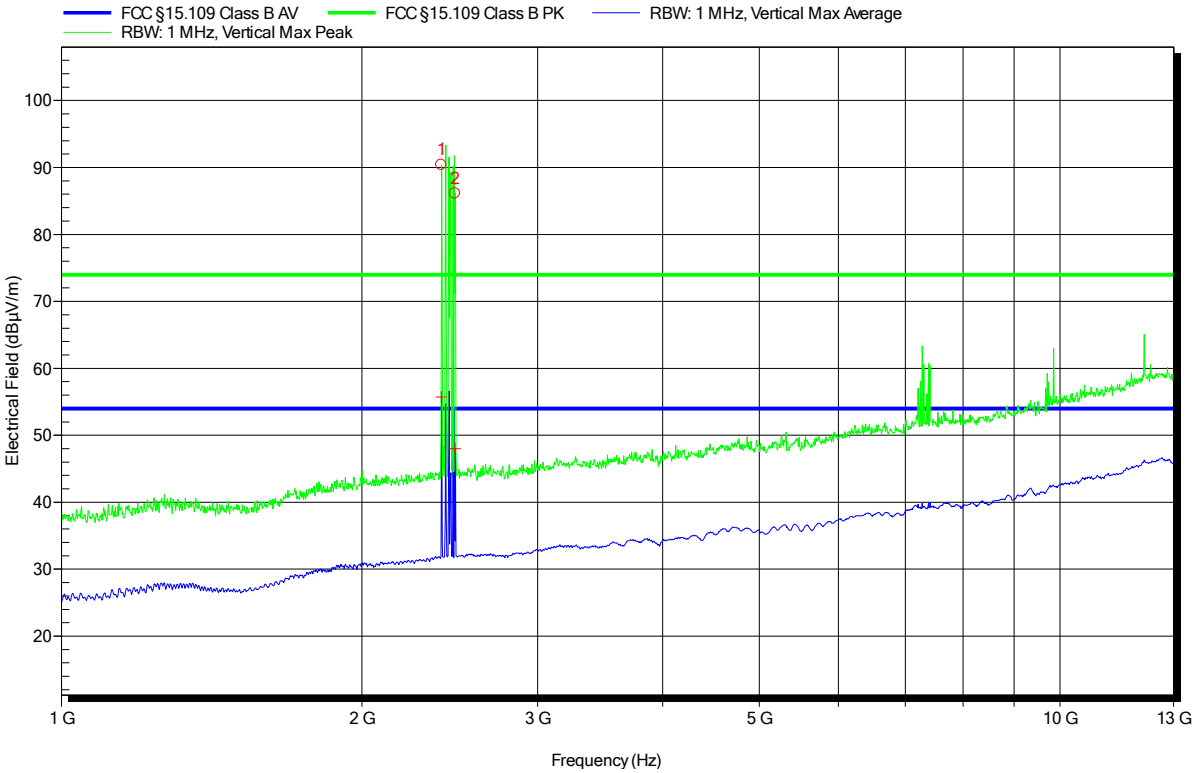

Peak Number	Frequency	Peak	Angle	Height
1	2.402 GHz	BT carrier		
2	2.48 GHz	BT carrier		