Product Manual

1. system diagram

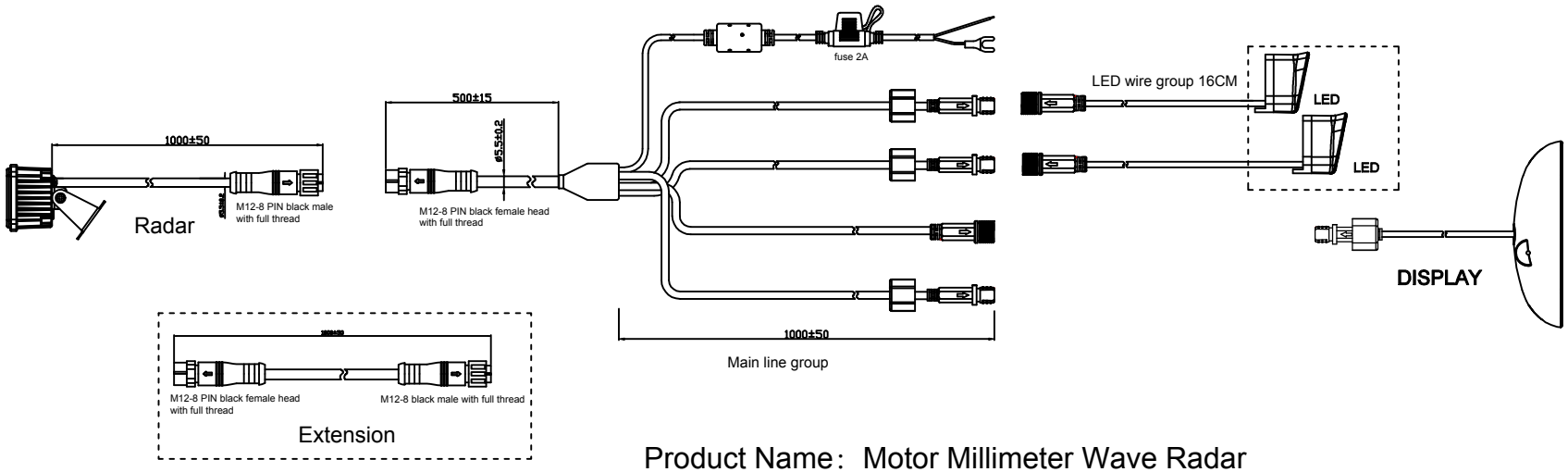

Product Name： Motor Millimeter Wave Radar
Model:AE-RD-BS05
FCC ID: 2AGPO-AE-RD-BS05

2. System Components

NO.	component	Qty
1	Radar host	1
2	Main line group	1
3	LED wire group 16CM	2
4	Display	1
5	Bracket accessory package	1
6	Extension 1M	optional

3.Technical Parameter

NO	Item	
1	Working voltage	12V / 24V DC
2	Rated voltage	10V--32V DC
3	Working current	< 800mA
4	Operation temperature	-40°C—+85°C
5	Maximum detection distance	60m
6	Maximum detection width	8m

* LED display operating voltage range 10V-28V

Radar manual

4. Function Description

4.1 The radar module is connected to the vehicle ACC power supply and starts working after being powered on.

4.2 When the radar module detects an object, on the alarm:
-Display the closest distance number;
-Indicates that the object is located on the left or right side of the vehicle

***For details, please refer to "5. Alarm Mode Description"**

5. Alarm Mode Description

The maximum detection range of the radar is 60M, and the width is 8M. Based on distance, the warning method is as follows

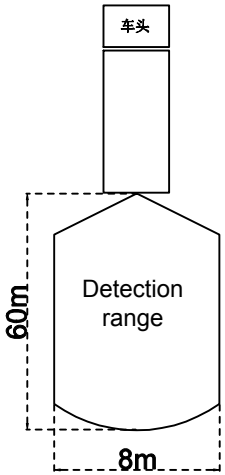

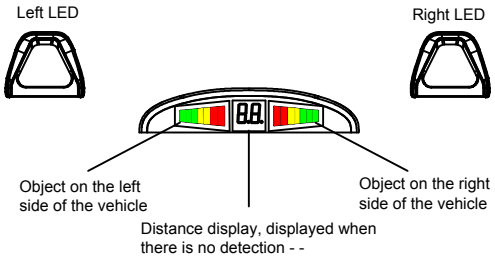

conditions	position	display	7-segment LED light	Left LED	Right LED
TTC< 5 seconds	Left	Yes	Lighting	Lighting	Not lit
	Right	Yes	Lighting	Not lit	Lighting
	Middle	Yes	Flicker	Flicker	Flicker
Blind spot range	Left	Yes	Lighting	Lighting	Not lit
	Right	Yes	Lighting	Not lit	Lighting
	Middle	—	Not lit	Not lit	Not lit
TTC> 5 seconds	Left	Yes	Lighting	Not lit	Not lit
	Right	Yes	Lighting	Not lit	Not lit
	Middle	—	Not lit	Not lit	Not lit
Out-of-scope		—	Not lit	Not lit	Not lit

FCC Warning

This device complies with part 15 of the FCC Rules. Operation is subject to the following two conditions: (1) This device may not cause harmful interference, and (2) this device must accept any interference received, including interference that may cause undesired operation.
Any changes or modifications not expressly approved by the party responsible for compliance could void the user's authority to operate the equipment. This equipment has been tested and found to comply with the limits for a Class B digital device, pursuant to part 15 of the FCC Rules. These limits are designed to provide reasonable protection against harmful interference in a residential installation. This equipment generates, uses and can radiate radio frequency energy and, if not installed and used in accordance with the instructions, may cause harmful interference to radio communications. However, there is no guarantee that interference will not occur in a particular installation. If this equipment does cause harmful interference to radio or television reception, which can be determined by turning the equipment off and on, the user is encouraged to try to correct the interference by one or more of the following measures:
—Reorient or relocate the receiving antenna.
—Increase the separation between the equipment and receiver.
—Connect the equipment into an outlet on a circuit different from that to which the receiver is connected.
—Consult the dealer or an experienced radio/TV technician for help.

FCC Radiation Exposure Statement
This equipment complies with FCC radiation exposure limits set forth for an uncontrolled environment .
This transmitter must not be co‐located or operating in conjunction with any other antenna or transmitter.
This equipment should be installed and operated with minimum distance 40cm between the radiator& your body.