SPECIFICATIONS

IEEE 802.11 b/g/n 2.4GHz 1T1R

Wi-Fi 1T1R Module

WL-UM01C-7601 (USB module)

Version 1.0

Contents

1. Change History of Revision.....3

2. Overview.....4

3. Features.....4

4. Applications.....5

5. General Specification.....5

6. Block Diagram.....6

7. Electrical Specifications.....6

8. Pin Definition.....8

9. Size reference.....9

10. USB interface electrical characteristics.....10

11. WIFI AN.....10

12. Recommended Reflow Profile.....11

13. RoHS compliance.....11

14. Wireless module before the SMT note.....12

Change History of Revision

Revisio	Date	Contents of Revision Change	Remark
1.0	2013/01/02	首次发布产品规格书	2013/01/02
1.0	2014/04/12	添加b/g/g的RX参数	2014/04/12
1.0	2014/06/27	更新模块图片（底层改为铺白油），修改第四部分的操作温度	2014/06/27
1.0	2016/05/27	更改页眉页脚的公司logo和网址，更改模块储存温度，添加模块贴片注意事项和包装说明	2016/05/27
1.0	2017/03/14	1.更改公司名称 2.新增加目录及12部分RoHS compliance	2017/03/14

1. Overview

The UM01C-7601 is a highly integrated Wi-Fi module which supports 150 Mbps PHY rate. It fully complies with IEEE 802.11n and IEEE 802.11 b/g standards, offering feature-rich wireless connectivity.At high standards,and delivering eliable,cost-effective throughput om an extended distance.Optimized RF architecture and baseband algorithms provide superb performance and low power consumption. Intelligent MAC design deploys a high efficient DMA engine and hardware data processing accelerators which offloads the host processor.The MT7601 is designed to support standard based features in the areas of security, quality of service and international regulations,giving end users the greatest performance any time and in any circumstance.

2. Features

- IEEE 802.11 b/g/n client
- Embedded high-performance 32-bit RISC microprocessor
- Highly integrated RF with 55nm CMOS technology
- 1T1R mode with support of 150Mbps PHY rate
- Integrate high efficiency switching regulator
- Best-in-class power consumption performance
- Compact 5mm x 5mm QFN40L package
- 1/2/3/4-wire PTA Wi-Fi / Bluetooth coexistence support

- 802.11 d/h/k compliant
- Security support for WFA WPA/WPA2 personal, WPS2.0, WAPI
- Supports 802.11w protected managed frames
- QoS support of WFA WMM, WMM PS
- Supports Wi-Fi Direct
- Fully compliance with USB v2.0 High-speed mode
- Per packet transmit power control
- Antenna diversity
- Auto-calibration

3. Applications

- Desk-Top PC
- Note-book（*）
- TV
- Blue-ray Disk
- Tablet PC （*）
- Set-top box

（*）：Host should apply C2PC for SAR test，etc first before sell

4. General Specification

Model	WL-UM01C-7601-V1.0
Product Name	WLAN 11n USB module
Major Chipset	MTK 7601
Standard	802.11b/g/n
Data Transfer Rate	1,2,5.5,6,11,12,18,22,24,30,36,48,54,60,90,120 and maximum of 150Mbps

Modulation Method	BPSK/ QPSK/ 16-QAM/ 64-QAM
Frequency Band	2.412-2.462 GHz ISM Band
Spread Spectrum	IEEE 802.11b: DSSS (Direct Sequence Spread Spectrum) IEEE 802.11g/n:OFDM (Orthogonal Frequency Division Multiplexing)
Operation Mode	Ad hoc, Infrastructure
Operation Range	Up to 180 meters in open space
LED	
OS Support	Windows 2000,XP32-64,Vista 32/64,Win7 32/64,Linux,Mac, Android, WIN CE
Security	WEP, TKIP, AES, WPA, WPA2
Interface	USB 2.0
Power Consumption	DC 3.3V
Operating Temperature	0 ~ +70° C ambient temperature
Storage Temperature	-10 ~ 80°C ambient temperature
Humidity	5 to 90 % maximum (non-condensing)
Dimension	12.9032 x 12.192 x 1.6mm (LxWxH) +-0.2MM

5. Block Diagram

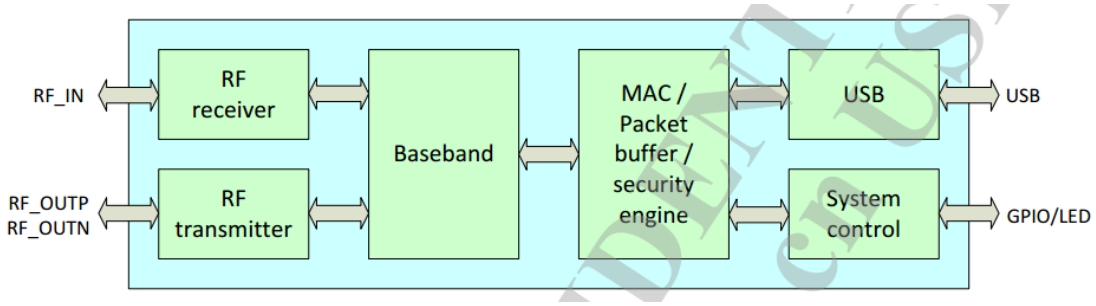

6. Electrical Specifications

1) DC Characteristics

Current Consumption	Min.	Typ.	Max.	Unit
TX Mode	-	110	-	mA

2) RF Characteristics for IEEE802.11b (11Mbps mode unless otherwise specified)

Items	Contents			
Specification	IEEE802.11b			
Mode	CCK			
Channel frequency	2412-2462 MHz			
Data rate	1,2,5.5,11Mbps			
RX (per≤85 dBm@8%)	-85 dBm			
TX Characteristics	Min.	Typ.	Max.	Unit
Power Level (18±1dBm)		18		dBm
EVM (≤-18)		-18		dB

3) RF Characteristics for IEEE802.11g (54Mbps mode unless otherwise specified)

Items	Contents			
Specification	IEEE802.11g			
Mode	OFDM			
Channel frequency	2412-2462 MHz			
Data rate	6,9,12,18,24,36,48,54Mbps			
RX (per≤70 dBm@10%)	-70 dBm			
TX Characteristics	Min.	Typ.	Max.	Unit
Power Level (18±1dBm)		18		dbm
EVM (≤-28)		-28		dm

4) RF Characteristics for IEEE802.11n (BW20_MCS7)

Items	Contents			
Specification	IEEE802.11n			
Mode	BW20_MCS7 65 Mbps			
Channel frequency	2412-2462MHz			
RX (per≤65 dBm@10%)	-65 dBm			
TX Characteristics	Min	Typ	Max	Unit
Power Level (16±1dBm)		16		dbm
EVM (≤-28)		-28		dm

5) RF Characteristics for IEEE802.11n (BW40_MCS7)

Items	Contents			
Specification	IEEE802.11n			
Mode	BW40_MCS7 135 Mbps			
Channel frequency	2422-2452 MHz			
RX (per≤65 dBm@10%)	-65 dBm			
TX Characteristics	Min.	Typ.	Max.	Unit
Power Level (16±1 dBm)		16		dBm
EVM (≤-28)		-28		dB

7. Pin Definition

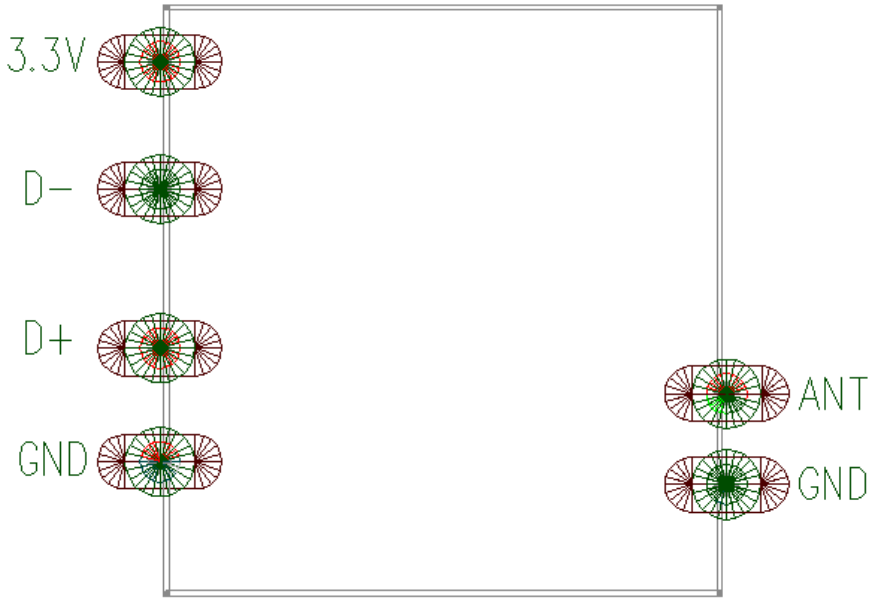

Pin	Definition	I/O	Power	Description
1	3.3V			VDD3.3V±0.1V
2	D-			USB D-
3	D+			USB D+
4	GND			Ground
5	GND			Ground
6	ANT			WIFI ANT OUTPUT

The picture of top

The picture of bottom

8.Size reference

Dimensions (mm)	Length	Width	Height
	12.9032	12.192	1.6
	(Tolerance:±0.2mm)	**(Tolerance:±0.2mm)**	**(Tolerance:±0.2mm)**

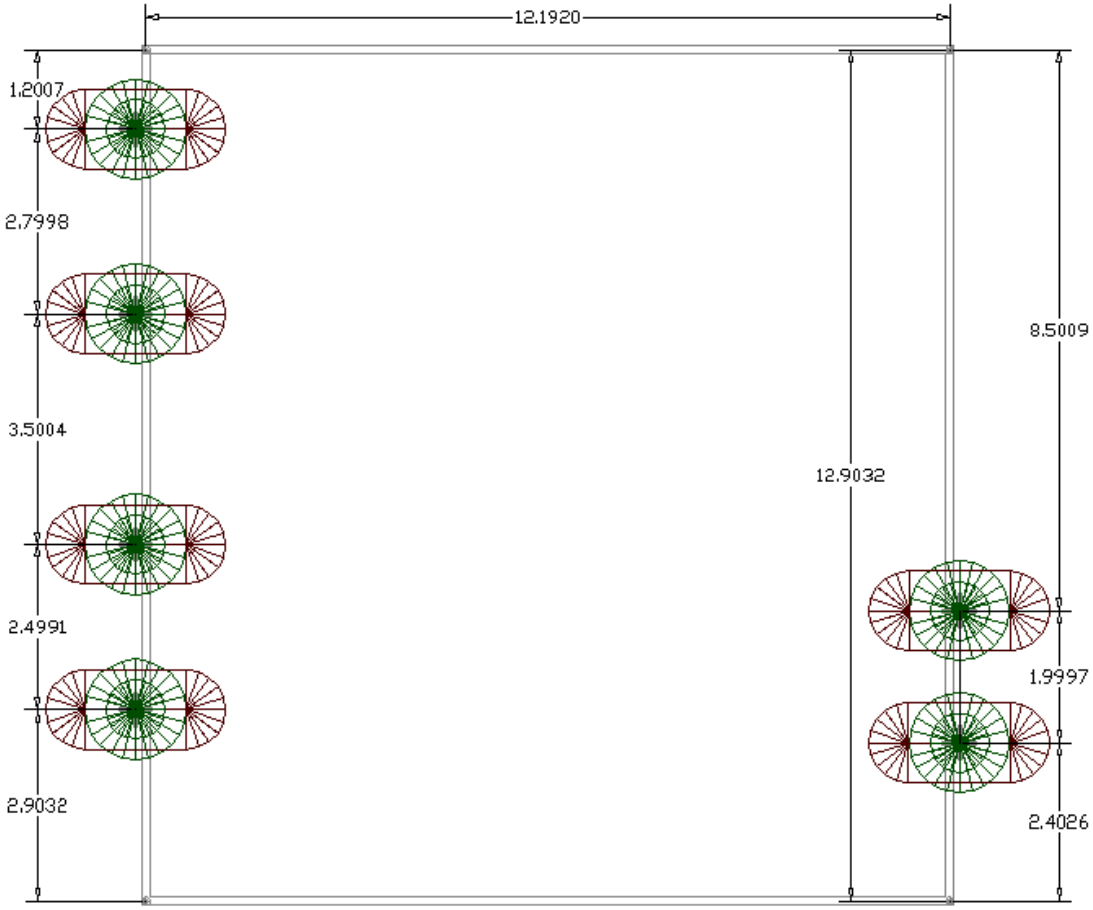

9.USB interface electrical characteristics

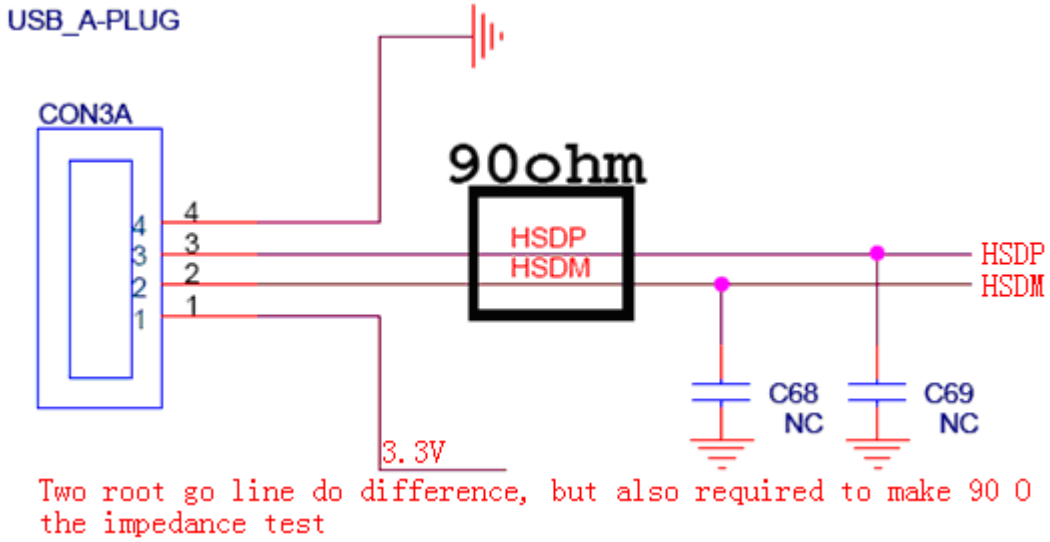

10.WIFI ANT

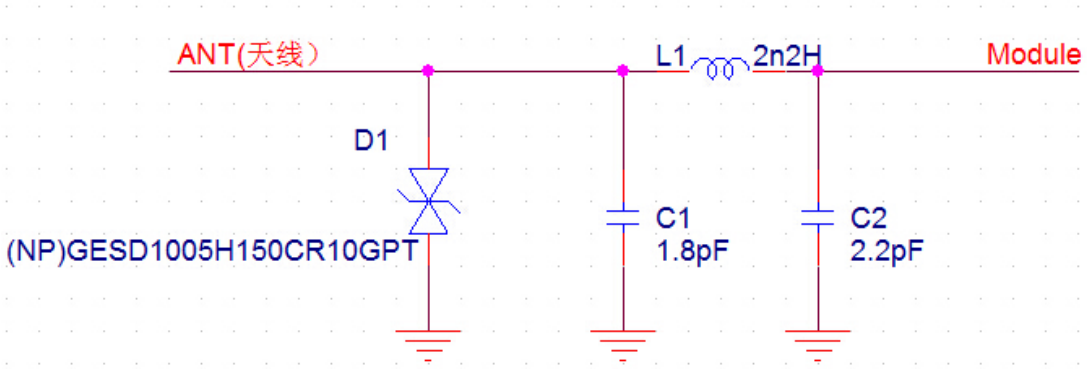

1. Above the dotted box part of the antenna matching is needed, the actual antenna matching electronic parameters shall prevail.

2.For RF part layout to do 50 ohm impedance. can't go on 90° of layout .The line length can't more than 20 mm.

注明：请一定要在焊天线端加一个 TVS 管，防止 ESD 静电打坏 WIFI 模组（如上图参考电路）.

11.Recommended Reflow Profile

Referred to IPC/JEDEC standard.
Peak Temperature : <250°C
Number of Times : ≤2 times

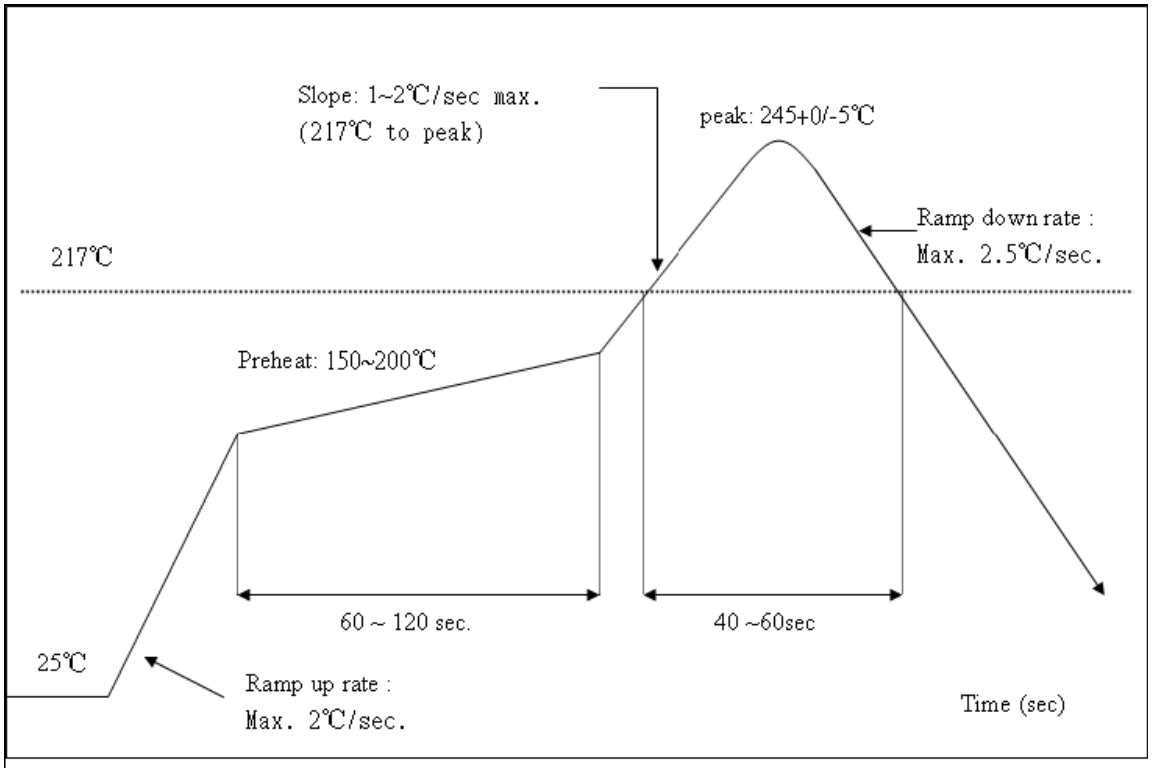

ENVIRONMENTAL

Operating

Operating Temperature: 0°C to +70 °C
Relative Humidity: 5-90% (non-condensing)

Storage

Temperature: -10°C to +80°C (non-operating)
Relevant Humidity: 5-95% (non-condensing)

12. RoHS compliance.

This product is RoHS compliance.

13.Wireless module before the SMT note:

1.When customers Open stencil must be sure the hole bigger to the Wireless module plate, please press 1 to 1 and 0.7 mm is widened to open outward, the thickness of 0.12 mm.

2.Can't get the wifi module bare hands when needs,must we wear the gloves and static ring.

3.The furnace temperature according to the size of the customer the mainboard ,generally like to stick on a tablet standard temperature of 250 + - 5,can do 260 + - 5.

Storage and use Wifi module control should pay attention to the following matters:

- **Module of the storage life of vacuum packaging:**

1-1.Storage life : 12 months. Storage conditions:<40℃. Relative humidity:<90%R.H.

1-2.After this bag is opened , devices that will be subjected to infrared reflow, vapor-phase reflow, or equivalent processing must be :

1-3.Check the humidity card :stored at ≦20%RH.If :30%~40%(pink)or greater than 40%(red).Labeling module has moisture absorption.

① Mounthed within 168 hours at factory conditions of: t≦30%℃，≦60%R.H.

② Once opened, the workshop the preservation of life for 168 hours.

1-4.If baking is required,devices may be baked for:

① Modules must be to remove module moisture problem.

② Baking temperature: 125 ℃, 8 hours.

③ After baking, put proper amount of desiccant to seal packages.

1-5. The actual number of module vacuum packing which is based on the actual number of packages to the customer requirements, vacuum packing of picture<1>

2.Module reel packaging items as follows.

2-1.Storage life : 12 months. Storage conditions:<40℃. Relative humidity:<90%R.H.

2-2.Module apart packing after 168 hours，To launch

13.Wifi 模块贴片装机前注意事项:

1.客户在开钢网时一定要将 wifi 模块焊盘的孔开大，请按 1 比 1 再向外扩大 0.7mm 比例开钢网，厚度按 0.12mm.

2.有需要拿 wifi 模块时不可以光手去拿，一定要戴上手套以及静电环.

3.过炉温度要根据客户主板的大小而定，一般像平板电脑上的标准温度为250+-5°，也可以做到260+-5°

Wifi 模块储存及使用管制应注意事项如下:

1.模块的真空包装之储存期限:

1-1.保存期限：12个月，储存环境条件：温度在：<40℃，相对湿度：<90%R.H.

1-2.模块包装被拆后，SMT 组装之时限:

1-3.检查湿度卡：显示值应小于30%（蓝色），如：30%~40%(粉红色）或者大于40%（红色）表示模块已吸湿气.

① 工厂环境温度湿度管制：≦30%℃，≦60%R.H。

② 拆封后，车间的保存寿命为 168 小时.

1-4.如在拆封后的 168 个小时内未使用完，需要烘烤，烘烤条件如下:

① 模块须重新烘烤，以除去模块吸湿问题.

② 烘烤温度条件：125℃，8 小时.

③ 烘烤后，放入适量的干燥剂再密封包装.

1-5. 模块真空包装数量以客户要求的实际包装数量为准，真空包装图片<1>

2.模块卷盘包装事项如下:

2-1.保存期限：12个月，储存环境条件：温度在：<40℃，相对湿度：<90%R.H.

2-2.模块拆开包装168小时后，如要上线贴片需要重新烘烤，以除去模块吸湿问题，烘烤温度条件：125℃，8小时。

2-3. 模块卷盘包装以客户要求的实际包装数量为准,卷盘包装图片<2>

3.模块托盘包装事项如下:

3-1.保存期限：3个月，储存环境条件：温度在：<40℃，相对湿度：<90%R.H.

3-2.模块如在 48 小时内未使用，在上线之前需要进行烘烤，

patch need to bake, to remove the module hygroscopic, baking temperature conditions：125℃，8hours.

2-3. The actual number of module reel packing which is based on the actual number of packages to the customer requirements, Reel packing of picture<2>

烘烤温度条件：125℃，8 小时。

3-3. 托盘包装每盘为 100pcs，模块托盘包装以客户要求的实际包装数量为准.

注：以上包装方式根据客户要求而定，包装以实际出货为准。

3.Module pallet packaging items as follows：

3-1.Storage life：3 months. Storage conditions:<40℃. Relative humidity:<90%R.H.

3-2.Module if not used within 48 hours, before launch the need for baking, baking temperature: 125 ℃, 8 hours.

3-3. Pallet packaging each plate is 100 PCS.The actual number of module pallet packing which is based on the actual number of packages to the customer requirements.

FCC Statement

This device complies with part 15 of the FCC Rules. Operation is subject to the following two conditions: (1) This device may not cause harmful interference, and (2) this device must accept any interference received, including interference that may cause undesired operation.

Any Changes or modifications not expressly approved by the party responsible for compliance could void the user's authority to operate the equipment.

The modular can be installed or integrated in mobile or fix devices only. This modular cannot be installed in any portable device .

FCC Radiation Exposure Statement

This modular complies with FCC RF radiation exposure limits set forth for an uncontrolled environment.

This transmitter must not be co-located or operating in conjunction with any other antenna or transmitter.

This modular must be installed and operated with a minimum distance of 20 cm between the radiator and user body.

If the FCC identification number is not visible when the module is installed inside another device, then the outside of the device into which the module is installed must also display a label referring to the enclosed module. This exterior label can use wording such as the following: "Contains Transmitter Module FCC ID: 2AGQ3UM01C Or Contains FCC ID: 2AGQ3UM01C"

When the module is installed inside another device, the user manual of the host must contain below warning statements;

1. This device complies with Part 15 of the FCC Rules. Operation is subject to the following two conditions:

(1) This device may not cause harmful interference.

(2) This device must accept any interference received, including interference that may cause undesired operation.

2. Changes or modifications not expressly approved by the party responsible for compliance could void the user's authority to operate the equipment.

The devices must be installed and used in strict accordance with the manufacturer's instructions as described in the user documentation that comes with the product.

Any company of the host device which install this modular with limit modular approval should perform the test of radiated emission and spurious emission according to FCC part 15C : 15.247 and 15.209 requirement, Only if the test result comply with FCC part 15C : 15.247 and 15.209 requirement， then the host can be sold legally.