EMC TEST REPORT

Applicant	Dspread Technology (Beijing) Inc
FCC ID	2AGQ6-CR100-UC
Product	Card Reader
Brand	DSPREAD
Model	CR100
Report No.	EFTA25030001-IE-06-E1V1
Issue Date	May 12, 2025

Eurofins TA Technology (Shanghai) Co., Ltd. tested the above equipment in accordance with the requirements in **FCC Code CFR47 Part15B (2024)/ ANSI C63.4-2014**. The test results show that the equipment tested is capable of demonstrating compliance with the requirements as documented in this report.

Prepared by: Liu Wei *Approved by: Xu Kai*

Eurofins TA Technology (Shanghai) Co., Ltd.

Building 3, No.145, Jintang Rd, Pudong Shanghai, P.R.China

TEL: +86-021-50791141/2/3

FAX: +86-021-50791141/2/3-8000

Table of Contents

1 Test Laboratory 5
1.1 Notes of the Test Report 5
1.2 Test Facility 5
1.3 Testing Location 5
2 General Description of Equipment Under Test 6
2.1 Applicant and Manufacturer Information 6
2.2 General Information 6
2.3 Applied Standards 7
2.4 Test Mode 8
3 Test Case Results 9
3.1 Radiated Emission 9
3.2 Conducted Emission 14
4 Uncertainty Measurement 17
5 Main Test Instruments 18
ANNEX A: The EUT Appearance 19
ANNEX B: Test Setup Photos 20

This report shall not be reproduced except in full, without the written approval of Eurofins TA Technology (Shanghai) Co., Ltd.

Version	Revision Description	Issue Date
Rev.0	Initial issue of report.	April 30, 2025
Rev.1	Updated information.	May 12, 2025
Note: This revised report (Report No.: EFTA25030001-IE-06-E1V1) supersedes and replaces the previously issued report (Report No.: EFTA25030001-IE-06-E1). Please discard or destroy the previously issued report and dispose of it accordingly.		

This report shall not be reproduced except in full, without the written approval of Eurofins TA Technology (Shanghai) Co., Ltd.

Summary of measurement results

Number	Test Case	Clause in FCC Rules	Conclusion
1	Radiated Emission	FCC Part15.109, ANSI C63.4-2014	PASS
2	Conducted Emission	FCC Part15.107, ANSI C63.4-2014	PASS
Date of Testing: March 25, 2025 ~April 8, 2025 Date of Sample Received: March 3, 2025			
Note: 1. All indications of Pass/Fail in this report are opinions expressed by Eurofins TA Technology (Shanghai) Co., Ltd. based on interpretations and/or observations of test results. Measurement Uncertainties were not taken into account and are published for informational purposes only.			

This report shall not be reproduced except in full, without the written approval of Eurofins TA Technology (Shanghai) Co., Ltd.

1 Test Laboratory

1.1 Notes of the Test Report

This report shall not be reproduced in full or partial, without the written approval of **Eurofins TA Technology (Shanghai) Co., Ltd.** The results documented in this report apply only to the tested sample, under the conditions and modes of operation as described herein. Measurement Uncertainties were not taken into account and are published for informational purposes only. This report is written to support regulatory compliance of the applicable standards stated above.

1.2 Test Facility

FCC (Designation number: CN1179, Test Firm Registration Number: 446626)

Eurofins TA Technology (Shanghai) Co., Ltd. has been listed on the US Federal Communications Commission list of test facilities recognized to perform measurements.

A2LA (Certificate Number: 3857.01)

Eurofins TA Technology (Shanghai) Co., Ltd. has been listed by American Association for Laboratory Accreditation to perform measurement.

1.3 Testing Location

Company:	Eurofins TA Technology (Shanghai) Co., Ltd.
Address:	Building 3, No.145, Jintang Rd, Pudong Shanghai, P.R.China
City:	Shanghai
Post code:	201201
Country:	P. R. China
Contact:	Xu Kai
Telephone:	+86-021-50791141/2/3
Fax:	+86-021-50791141/2/3-8000
Website:	https://www.eurofins.com/electrical-and-electronics
E-mail:	Kain.Xu@cpt.eurofinscn.com

This report shall not be reproduced except in full, without the written approval of Eurofins TA Technology (Shanghai) Co., Ltd.

2 General Description of Equipment Under Test

2.1 Applicant and Manufacturer Information

Applicant	Dspread Technology (Beijing) Inc
Applicant address	407Suite, B12C Building UBP, NO.10 Jiuxianqiao Road，Chaoyang District Beijing, China
Manufacturer	Dspread Technology (Beijing) Inc
Manufacturer address	407Suite, B12C Building UBP, NO.10 Jiuxianqiao Road，Chaoyang District Beijing, China

2.2 General Information

EUT Description			
Device Type	Portable Device		
Model	CR100		
Lab internal SN	EFTA25030001-IE-06/S01		
HW Version	1.1.1.001		
SW Version	1.02.0001		
Power Rating	DC 4.0V		
Connecting I/O Port(s)	Please refer to the User's Manual.		
Antenna Type	Internal Antenna		
Frequency	Band	Tx (MHz)	Rx (MHz)
	Bluetooth	2400 ~ 2483.5	2400 ~ 2483.5
	NFC	13.56	13.56
EUT Accessory			
Battery 1	Manufacturer: Beijing Guocai Huayang Technology Co., Ltd. Model: GCHY 451440 DC 3.7V, 250mAh		
Battery 2	Manufacturer: Shenzhen Malak Industrial Co., Ltd. Model: CR1632 DC 3.0V, 125mAh		
USB Cable	Manufacturer: Shenzhen Malak Industrial Co., Ltd. Model: JY-C15-34 42.5cm Cable, Shielded		
Auxiliary Test Equipment			
Adapter	Manufacturer: ZTE Model: STC-A51D-A		
Note: 1. The EUT is sent from the applicant to Eurofins TA and the information of the EUT is declared by the applicant.			

This report shall not be reproduced except in full, without the written approval of Eurofins TA Technology (Shanghai) Co., Ltd.

2.3 Applied Standards

According to the specifications of the manufacturer, it must comply with the requirements of the following standards:

Test standards
FCC Code CFR47 Part15B (2024)
ANSI C63.4-2014

This report shall not be reproduced except in full, without the written approval of Eurofins TA Technology (Shanghai) Co., Ltd.

2.4 Test Mode

Test Mode	
Mode 1	Adapter+ USB Cable +EUT +Standby

Test Type	Test Mode	Worst Mode
Radiated Emission	Mode 1	Mode 1
Conducted Emission	Mode 1	Mode 1
After technical evaluation or/and preliminary test, the test data of the worst-case condition was recorded in this report.		

This report shall not be reproduced except in full, without the written approval of Eurofins TA Technology (Shanghai) Co., Ltd.

3 Test Case Results

3.1 Radiated Emission

Ambient Condition

Temperature	Relative humidity
15°C ~ 35°C	30% ~ 60%

Methods of Measurement

The EUT is placed on a non-metallic table 0.8m above the horizontal metal reference ground plane. The distance between EUT and receive antenna should be 10 meters below 1GHz; 3 meters for above 1GHz. During the test, the EUT was operating in its typical mode. The test method is according to ANSI C63.4-2014. Sweep the whole frequency band through the range from 30MHz to the 5th harmonic of the carrier. During the test, the height of receive antenna shall be moved from 1 to 4 meters, and the antenna shall be performed under horizontal and vertical polarization. The turn table shall be rotated from 0 to 360 degrees for detecting the maximum of radiated signal level.
The data of cable loss and antenna factor has been calibrated in full testing frequency range before the testing. During the test, the EUT is worked at maximum output power.
Set the spectrum analyzer in the following:

Below 1GHz:
RBW=100 kHz / VBW=300 kHz / Sweep=AUTO
Above 1GHz:
(a) PEAK Detector: RBW=1MHz / VBW=3MHz/ Sweep=AUTO
(b) AVERAGE Detector: RBW=1MHz / VBW=3MHz / Sweep=AUTO

The radiated emission was measured in the following position: EUT stand-up position (Z axis), lie-down position (X, Y axis). The worst emission was found in lie-down position (X axis) and the worst case was recorded.

This report shall not be reproduced except in full, without the written approval of Eurofins TA Technology (Shanghai) Co., Ltd.

Test Setup

Below 1GHz

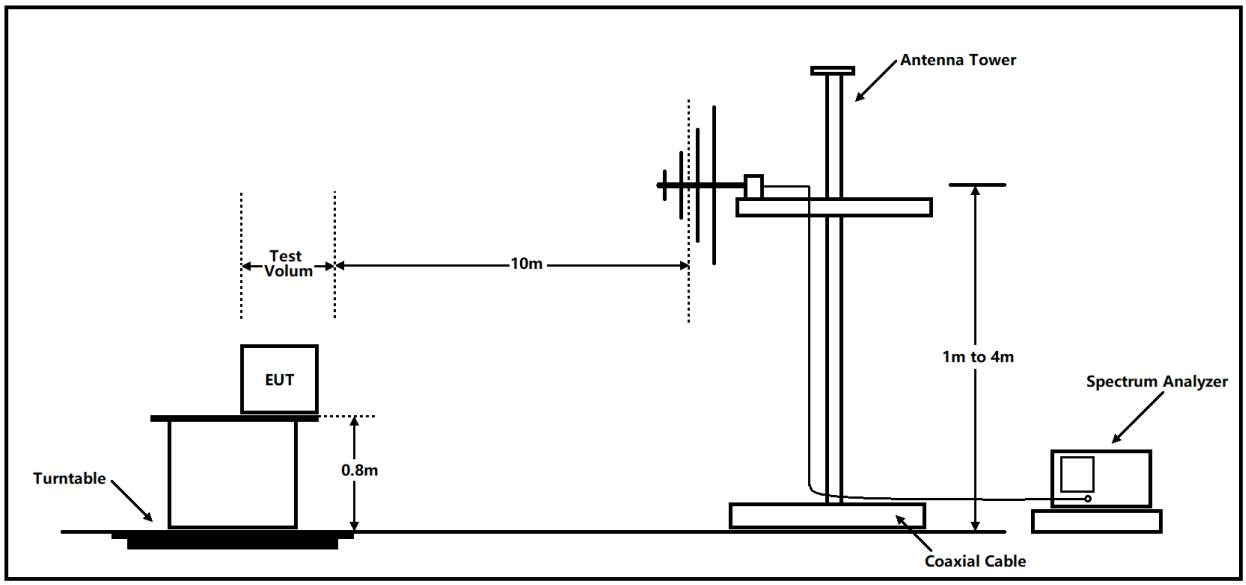

Note: Area side: 21m x 12m

Above 1GHz

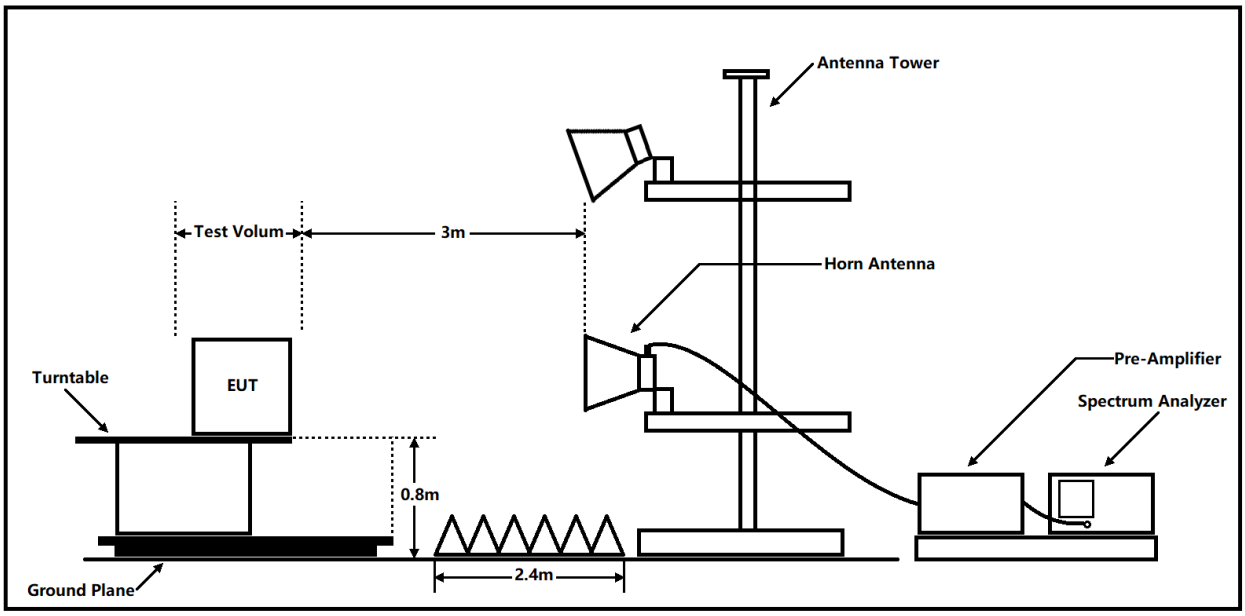

Note: Area side: 2.4mX3.6m

Antenna Tower meets ANSI C63.4 requirements for measurements above 1 GHz by keeping the antenna aimed at the EUT during the antenna's ascent/ descent along the antenna mast.

This report shall not be reproduced except in full, without the written approval of Eurofins TA Technology (Shanghai) Co., Ltd.

Limits

Class B

Frequency (MHz)	Field Strength (dBµV/m)	Detector
30 -88	30.0	Quasi-peak
88-216	33.5	Quasi-peak
216 – 960	36.0	Quasi-peak
960-1000	44.0	Quasi-peak
1000-5th harmonic of the highest frequency or 40GHz, which is lower	54 74	Average Peak

Frequency range of radiated measurements

Highest frequency generated or used in the device or on which the device operates or tunes (MHz)	Upper frequency of measurement range (MHz)
Below 1.705	30
1.705-108	1000
108-500	2000
500-1000	5000
Above 1000	5th harmonic of the highest frequency or 40 GHz, whichever is lower.

This report shall not be reproduced except in full, without the written approval of Eurofins TA Technology (Shanghai) Co., Ltd.

Test Results

Sweep the whole frequency band through the range from 30MHz to the 5th harmonic of the carrier.

The following graphs display the maximum values of horizontal and vertical by software.
For above 1GHz, Blue trace uses the peak detection, Green trace uses the average detection.
A symbol (dB V/) in the test plot below means (dBµV/m)

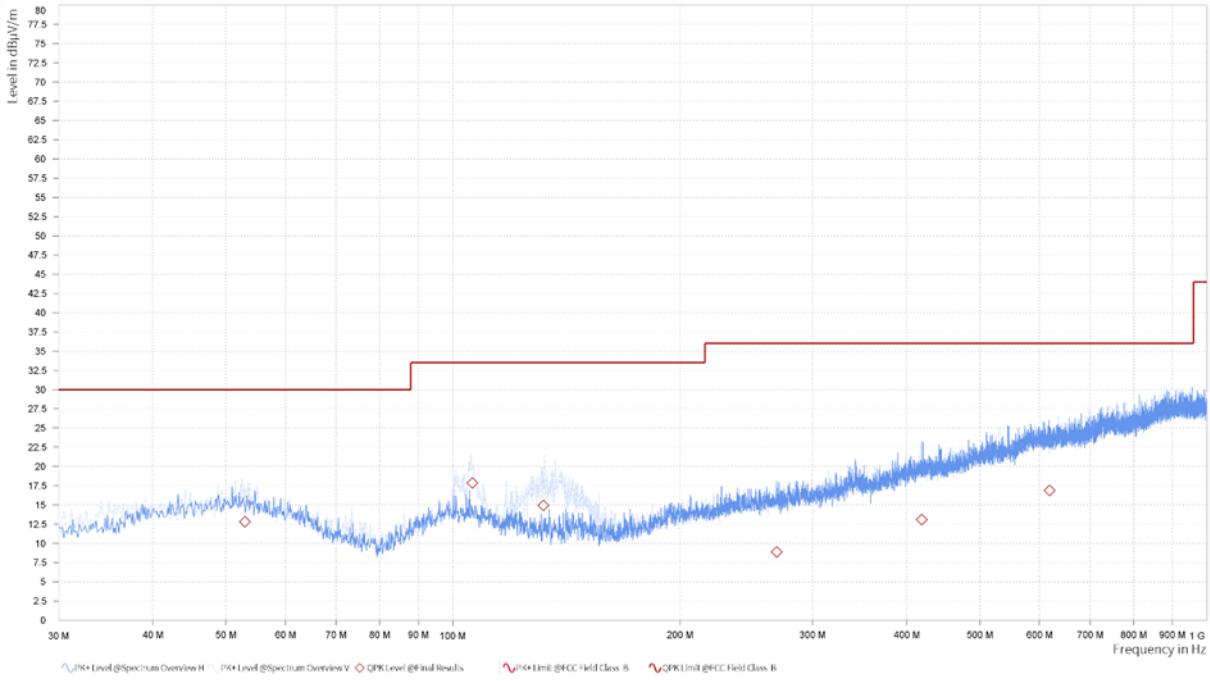

Radiated Emission from 30MHz to 1GHz

Frequency (MHz)	Quasi-Peak (dBµV/m)	Limit (dBµV/m)	Margin (dB)	Height (m)	Polarization	Azimuth (deg)	Correct Factor (dB)
53.003	12.81	30.00	17.19	1.04	V	17.9	-8.69
106.144	17.85	33.50	15.65	1.89	V	360	-10.18
131.841	14.92	33.50	18.58	1.00	V	304.2	-12.63
268.996	8.86	36.00	27.14	2.25	H	326.4	-8.13
418.682	13.07	36.00	22.93	1.04	H	47.6	-4.18
618.569	16.88	36.00	19.12	1.02	V	119.5	-0.77

Remark: 1. Correction Factor = Antenna factor + Insertion loss(cable loss+amplifier gain)
2. Margin = Limit – Quasi-Peak

This report shall not be reproduced except in full, without the written approval of Eurofins TA Technology (Shanghai) Co., Ltd.

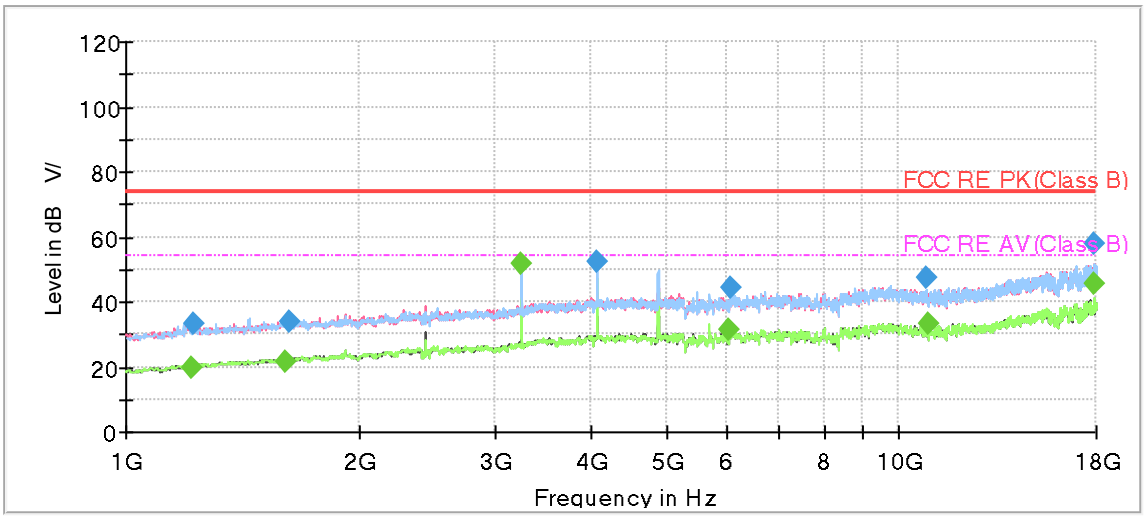

Radiated Emission from 1GHz to 18GHz

Frequency (MHz)	MaxPeak (dBµV/m)	Average (dBµV/m)	Limit (dBµV/m)	Margin (dB)	Meas. Time (ms)	Height (cm)	Pol	Azimuth (deg)	Corr. (dB/m)
1215.302500	---	19.52	54.00	34.48	500.0	125.0	H	15.0	-18.7
1220.698750	33.34	---	74.00	40.66	500.0	192.0	H	293.0	-18.7
1606.458750	---	21.77	54.00	32.23	500.0	100.0	H	15.0	-16.3
1624.178750	33.92	---	74.00	40.08	500.0	193.0	H	311.0	-16.2
3253.328750	---	51.96	54.00	2.04	500.0	117.0	H	12.0	-9.7
4066.682500	52.39	---	74.00	21.61	500.0	109.0	H	1.0	-6.5
6041.826250	---	31.18	54.00	22.82	500.0	116.0	V	249.0	-4.2
6058.175000	44.04	---	74.00	29.96	500.0	109.0	V	355.0	-4.1
10852.74625	47.60	---	74.00	26.40	500.0	222.0	V	51.0	-0.8
10933.33000	---	33.37	54.00	20.63	500.0	100.0	V	0.0	-0.7
17888.32500	57.86	---	74.00	16.14	500.0	184.0	H	276.0	10.1
17892.63375	---	45.53	54.00	8.47	500.0	193.0	V	51.0	10.1

Remark: 1. Correction Factor = Antenna factor + Insertion loss (cable loss + amplifier gain)
2. Margin = Limit – MaxPeak / Average

This report shall not be reproduced except in full, without the written approval of Eurofins TA Technology (Shanghai) Co., Ltd.

3.2 Conducted Emission

Ambient Condition

Temperature	Relative humidity
15°C ~ 35°C	30% ~ 60%

Methods of Measurement

The EUT is placed on a non-metallic table of 80cm height above the horizontal metal reference ground plane. During the test, the EUT was operating in its typical mode. The test method is according to ANSI C63.4-2014. Connect the AC power line of the EUT to the L.I.S.N. Use EMI receiver to detect the average and Quasi-peak value. RBW is set to 9 kHz, VBW is set to 30kHz. The measurement result should include both L line and N line.

Test Setup

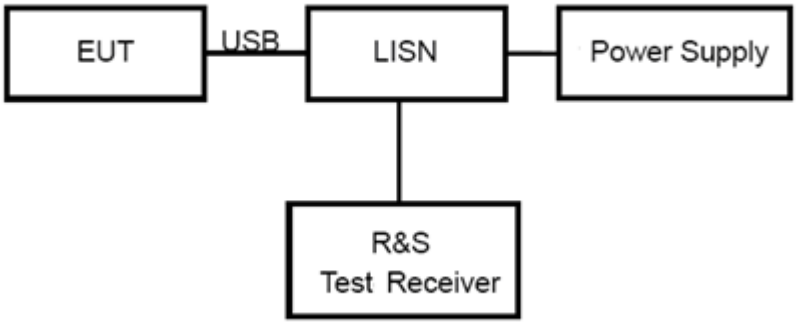

Note: Power Supply is AC Power source and it is used to change the voltage 120V/60Hz.

Limits

Frequency (MHz)	Class A (dBμV)		Class B (dBμV)	
	Quasi-peak	Average	Quasi-peak	Average
0.15 - 0.5	79	66	66 to 56 *	56 to 46*
0.5 - 5	73	60	56	46
5 - 30	73	60	60	50
*: Decreases with the logarithm of the frequency.				

Note: The EUT should meet CLASS B limit.

This report shall not be reproduced except in full, without the written approval of Eurofins TA Technology (Shanghai) Co., Ltd.

Test Results

Following plots, Blue trace uses the peak detection; Green trace uses the average detection.

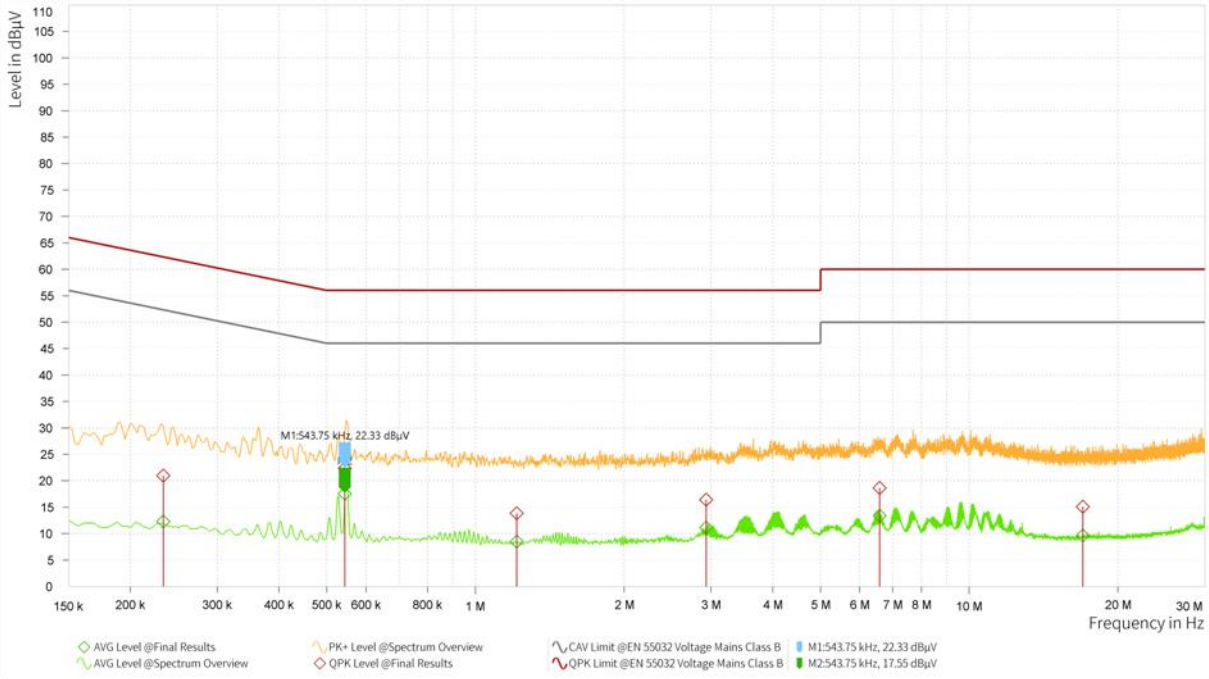

Frequency (MHz)	QuasiPeak (dBµV)	Limit (dBµV)	Margin (dB)	Average (dBµV)	Limit (dBµV)	Margin (dB)	Meas. Time (s)	Line	Corr. (dB)
0.233	20.96	62.33	41.38	12.30	52.33	40.03	1.000	L1	20.99
0.544	22.33	56.00	33.67	17.55	46.00	28.45	1.000	L1	20.73
1.212	13.85	56.00	42.15	8.51	46.00	37.49	1.000	L1	20.01
2.933	16.39	56.00	39.61	11.14	46.00	34.86	1.000	L1	19.49
6.585	18.63	60.00	41.37	13.40	50.00	36.60	1.000	L1	19.41
16.989	15.10	60.00	44.90	9.64	50.00	40.36	1.000	L1	19.56

Remark: Correct factor=cable loss + LISN factor

L line

Conducted Emission from 150 kHz to 30 MHz

This report shall not be reproduced except in full, without the written approval of Eurofins TA Technology (Shanghai) Co., Ltd.

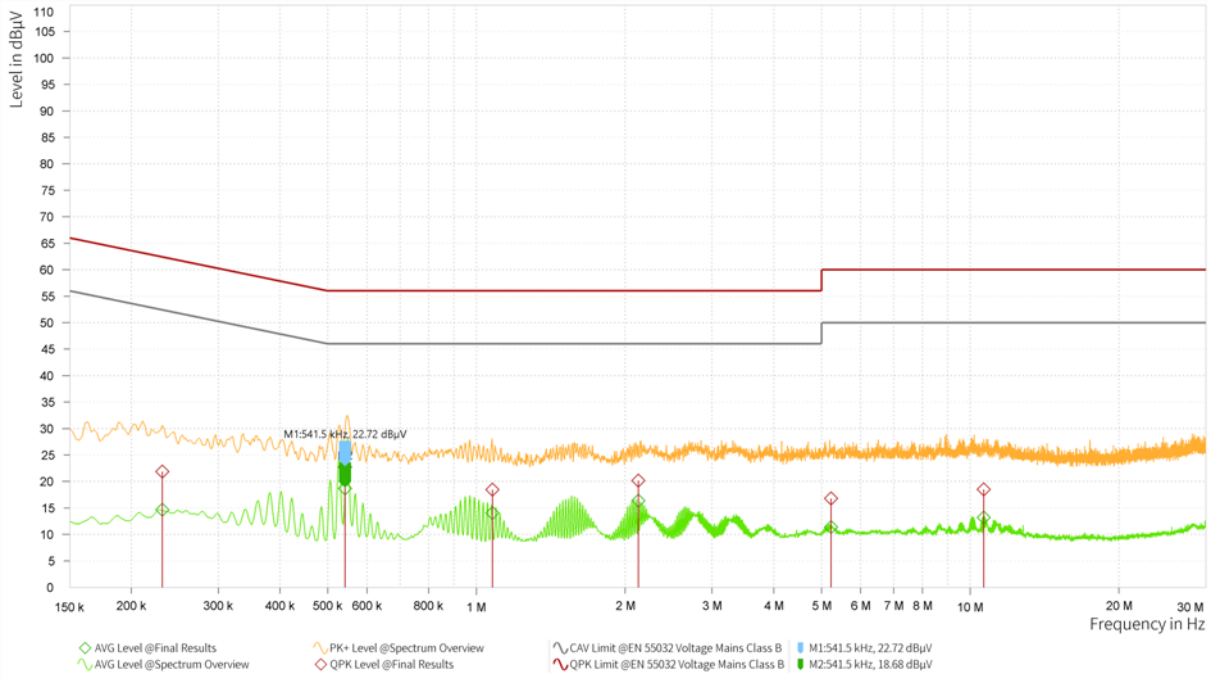

Frequency (MHz)	QuasiPeak (dBµV)	Limit (dBµV)	Margin (dB)	Average (dBµV)	Limit (dBµV)	Margin (dB)	Meas. Time (s)	Line	Corr. (dB)
0.231	21.86	62.41	40.55	14.67	52.41	37.74	1.000	N	21.00
0.542	22.72	56.00	33.28	18.68	46.00	27.32	1.000	N	20.74
1.077	18.48	56.00	37.52	14.04	46.00	31.96	1.000	N	20.11
2.128	20.16	56.00	35.84	16.35	46.00	29.65	1.000	N	19.63
5.226	16.78	60.00	43.22	11.39	50.00	38.61	1.000	N	19.41
10.658	18.51	60.00	41.49	13.17	50.00	36.83	1.000	N	19.42

Remark: Correct factor=cable loss + LISN factor

N line

Conducted Emission from 150 kHz to 30 MHz

This report shall not be reproduced except in full, without the written approval of Eurofins TA Technology (Shanghai) Co., Ltd.

4 Uncertainty Measurement

Case	Uncertainty	Factor k
Radiated Emission 30MHz – 200MHz	3.39 dB	1.96
Radiated Emission 200MHz – 1GHz	3.82 dB	1.96
Radiated Emission 1GHz – 18GHz	6.51 dB	1.96
Conducted Emission	2.57 dB	2

This report shall not be reproduced except in full, without the written approval of Eurofins TA Technology (Shanghai) Co., Ltd.

5 Main Test Instruments

Name of Equipment	Manufacturer	Type/Model	Serial Number	Calibration Date	Expiration Time
Radiated Emission					
EMI Test Receiver	R&S	ESCI3	100948	2024-05-07	2025-05-06
Loop Antenna	SCHWARZBECK	FMZB1519	1519-047	2023-04-16	2026-04-15
EMI Test Receiver	R&S	ESR	102389	2024-05-07	2025-05-06
Signal Analyzer	R&S	FSV40	101298	2024-05-07	2025-05-06
TRILOG Broadband Antenna	SCHWARZBECK	VULB 9163	01111	2022-10-25	2025-10-24
Horn Antenna	R&S	HF 907	102723	2023-11-24	2026-11-23
Amplifier	R&S	SCU18	10034	2024-05-08	2025-05-07
Software	R&S	EMC32	9.26.01	/	/
Conducted Emission					
Artificial main network	R&S	ENV216	102191	2024-12-02	2026-12-01
EMI Test Receiver	R&S	ESR	101667	2024-05-07	2025-05-06
Software	R&S	EMC32	10.35.10	/	/

This report shall not be reproduced except in full, without the written approval of Eurofins TA Technology (Shanghai) Co., Ltd.

ANNEX A: The EUT Appearance

The EUT Appearance are submitted separately.

This report shall not be reproduced except in full, without the written approval of Eurofins TA Technology (Shanghai) Co., Ltd.

ANNEX B: Test Setup Photos

The Test Setup Photos are submitted separately.

******** END OF REPORT ********

This report shall not be reproduced except in full, without the written approval of Eurofins TA Technology (Shanghai) Co., Ltd.