BUTTONS DESCRIPTION

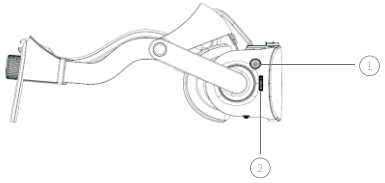

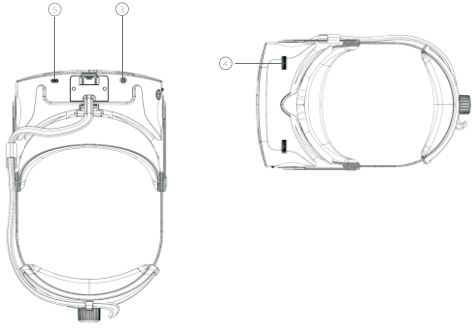

1. The power button
   Press the power button to star up the headset
   When the power is on, this key is to adjust the brightness.
   Press one time for each level of brightness.

2. The volume button
   Slide roller to adjust the volume.

3. The earphone jack
   Support 3.5mm standard earphones

4. Pupil distance adjustment rollers
   Adjust the pupil distance with the rollers to achieve the best visual effect.

5. MICRO USB port
   Provides the data connection with the optional space tracking kits.

NOTES:

Any user having the following symptoms during use should stop using this headset immediately: convulsion, epilepsy, eye or muscle cramps, involuntary movement, vertigo, disorientation, blurred vision, unconsciousness, nausea, dizziness, simulator sickness (similar to motion sickness) or other head or eye discomfort symptoms.

If your are prone to motion sickness in daily life, it is highly possible that you may feel ill when using this headset. Please seek immediate medical attention if you suffer from severe dizziness during use or if the symptoms do not disappear after stop using. Before the symptoms disappear, please do not drive vehicles, operate mechanical equipment or conduct other similar activities.

If this is your first time using a VR headset, you are recommended to use this headset in progressive way. At the beginning, you are recommended to use this headset for only a few minutes at a time to help your body adapt. Please take a break for 10-15 minutes every hour depending on your physical condition. Please increase the frequency and duration of rest if your are feeling uncomfortable.

Please use this VR headset in a correct and comfortable manner. Please do not use this VR headset under the state of fatigue, lack of sleep, drunk or taking medicine. Please do not use this VR headset in a narrow or frenzied place. Please pay attention to avoid the data cable from winding to the your body during use.

For patients suffering from abnormal binocular vision or ophthalmic diseases, for example, amblyopia, strabismus or anisometropia , please consult your physician before using this product.

Any Changes or modifications not expressly approved by the party responsible for compliance could void the user's authority to operate the equipment.

Note:

This equipment has been tested and found to comply with the limits for a Class B digital device, pursuant to part 15 of the FCC Rules. These limits are designed to provide reasonable protection against harmful interference in a residential installation. This equipment generates uses and can radiate radio frequency energy and, if not installed and used in accordance with the instructions, may cause harmful interference to radio communications. However, there is no guarantee that interference will not occur in a particular installation. If this equipment does cause harmful interference to radio or television reception, which can be determined by turning the equipment off and on, the user is encouraged to try to correct the interference by one or more of the following measures:

- Reorient or relocate the receiving antenna.
- Increase the separation between the equipment and receiver.
- Connect the equipment into an outlet on a circuit different from that to which the receiver is connected.
- Consult the dealer or an experienced radio/TV technician for help.

This device complies with Part 15 of the FCC rules. Operation is subject to the following two conditions:
1) this device may not cause harmful interference, and
2) this device must accept any interference received, including interference that may cause undesired operation.

Inlife-Handnet Co., Ltd.

Address:	53rd Floor, CES Tower, No. 3099, Keyuan South Road, Nanshan District, Shenzhen, China
Tel:	(+86-755) 8628 4555
Email:	info@3dinlife.com
Website:	www.3dinlife.com
Hotline:	400-067-0690

V9S VR Headset
User Instructions

http://www.3dinlife.com

RECOMMENDED CONFIGURATION

System	Windows 7 SP1 64 bit or above
CPU	Intel i5-6500 or with equal performance or above
Graphic Card	NVIDIA GTX1060 and above
Memory	8GB or more

INSTALLATION AND CONNECTION

Connect the headset to the desktop PC.

Put the headset horizontally on the table; plug in the universal 3.5mm earphone into the headset earphone port; connect the DP/USB/ audio three-in-one cables to computer host.

Note: please connect the USB cable to the USB 3.0 port at the back of the computer host.

INSTALL MANAGEMENT SOFTWARE

For better use of Viulux headset, please install the management software “Viulux Clan” (English Version).
Download the management software through the download center: http://www.3dinlife.com

Note: The security firewall or other VR headsets’ driver may cause management software start up unusual, please close these program during start-up the management software.

* If initial installation of management software is failed , please right-click the icon of management software , select "run as administrator" to install it again.
* After management software installation is done, there will be a icon of Viulux Clan on the computer desktop. Double-click the icon with mouse to run the management software.
* Viulux Clan management software may not be able to support some specific gaming or video, please refer to the "Display Settings" at below to run such games or video.

DISPLAY SETTINGS

Right click on the desktop and select “Screen Resolution". The window shown below will pop up.

Note: If there are two screens in the window, the virtual reality headset is correctly connected to the computer and is recognized by the computer. If only one screen is displayed in the window, the virtual reality headset is not connected and is not identified by the computer. Please refer to the "installation and connection" section of this manual for solutions.

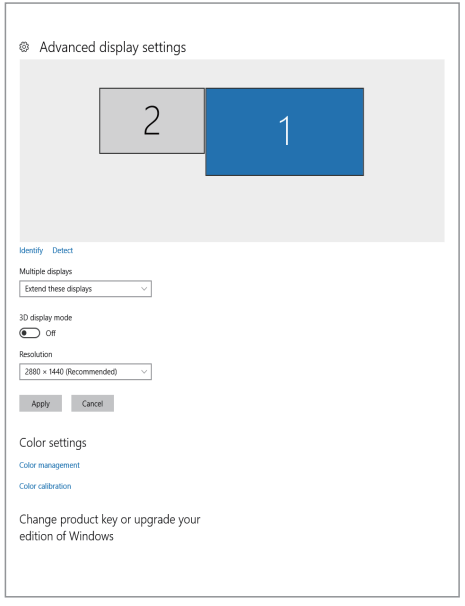

Note: In the “Display” option, generally the [Computer Monitor] is defaulted. When running certain games or 3D video, please switch the game or video dispaly on the screen of Viulux V9S. Switch between interface 1 and 2 .

In "resolution" option, please set the resolution as [2880 * 1440]

In the “Direction” option, generally [Horizontal] is defaulted. However, depending on different graphics card, the display direction inside the headset may be different. If the display direction is incorrect, please modify the direction in the “Direction” option until the display image is correctly displayed.

In “Multi-display” option, please select “Expand these displays”

SETUP INSTRUCTIONS

Please make sure the DP and USB ports of the computer are working well.

When using Viulux V9S headset, please make sure that the three -in-one cables of DP/USB/ audio have been connected to the computer correctly.

Before using Viulux V9S, Please refer to Installation Instruction of “Viulux Clan” management software.

The headband of Viulux V9S is adjustable, please adjust it to comfort size according to personal situation.

When not using three-in-one data cables of DP/USB/ audio, please unplug them out to extend the life of the product.

It is prohibited to bend the data cables sharply to avoid damage.

PACKING LIST

Viulux V9S Headset * 1

User Instruction * 1

Three-in-one cables * 1

Product Warranty * 1

Product Certificate * 1