Standard:	FCC PART 15.407	Test Distance:	3m
Test item:	Band edge	Power:	AC 110V/60Hz
Frequency:	5290MHz	Temp.(℃)/Hum.(%RH):	26(℃)/60%RH
Mode:	Mode 5	Date:	12/09/2016
Ant.Polar.:	Vertical		
Description:	Antenna:CO59-510347-A		

No.	Frequency (MHz)	Reading (dBuV)	Correct Factor (dB/m)	Result (dBuV/m)	Limit (dBuV/m)	Margin (dB)	Remark
1	5140.320	56.53	8.24	64.77	74.00	-9.23	peak
2	5140.320	37.27	8.24	45.51	54.00	-8.49	AVG
3	5150.000	49.14	8.25	57.39	74.00	-16.61	peak
4	5150.000	37.68	8.25	45.93	54.00	-8.07	AVG
5	5350.000	59.29	8.41	67.70	74.00	-6.30	peak
6	5350.000	44.57	8.41	52.98	54.00	-1.02	AVG
7	5367.840	64.69	8.43	73.12	74.00	-0.88	peak
8	5367.840	44.05	8.43	52.48	54.00	-1.52	AVG

Note:1.Result (dBuV/m) = Correct Factor (dB/m) + Reading(dBuV).

2.Correction factor (dB/m) = Antenna Factor (dB/m) + Cable loss (dB) – Pre-Amplifier gain (dB).

3. When the peak results are less than average limit, so not need to evaluate the average.

Standard:	FCC PART 15.407	Test Distance:	3m
Test item:	Band edge	Power:	AC 110V/60Hz
Frequency:	5530MHz	Temp.(℃)/Hum.(%RH):	26(℃)/60%RH
Mode:	Mode 5	Date:	12/09/2016
Ant.Polar.:	Horizontal		
Description:	Antenna:CO59-510347-A		

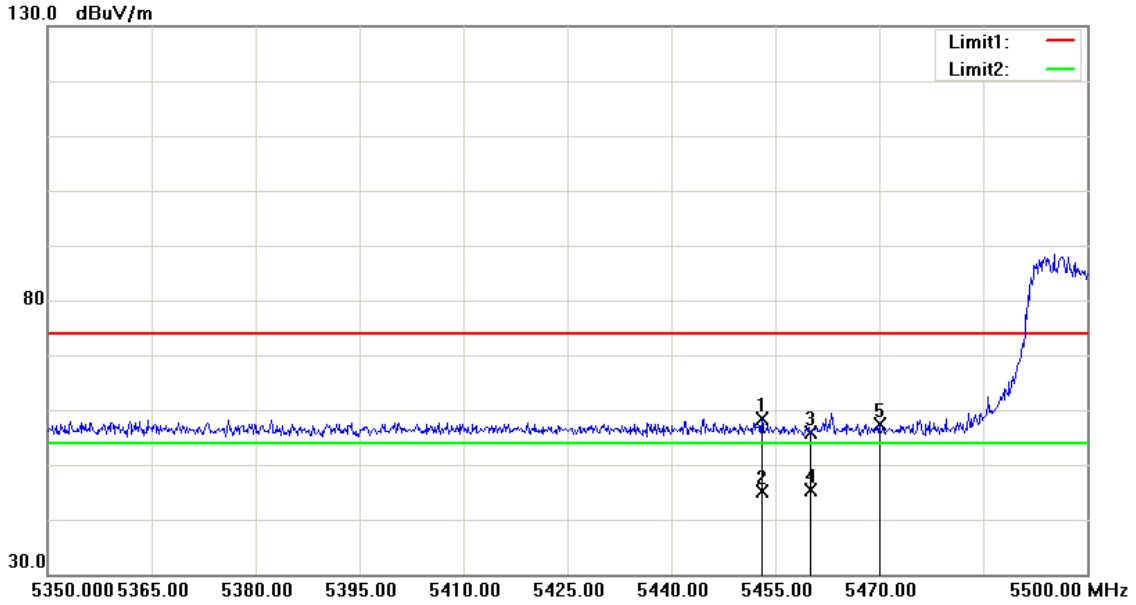

No.	Frequency (MHz)	Reading (dBuV)	Correct Factor (dB/m)	Result (dBuV/m)	Limit (dBuV/m)	Margin (dB)	Remark
1	5453.050	49.84	8.51	58.35	74.00	-15.65	peak
2	5453.050	36.74	8.51	45.25	54.00	-8.75	AVG
3	5460.000	47.48	8.51	55.99	74.00	-18.01	peak
4	5460.000	36.85	8.51	45.36	54.00	-8.64	AVG
5	5470.000	48.88	8.53	57.41	68.20	-10.79	peak

Note:1.Result (dBuV/m) = Correct Factor (dB/m) + Reading(dBuV).

2.Correction factor (dB/m) = Antenna Factor (dB/m) + Cable loss (dB) – Pre-Amplifier gain (dB).

3. When the peak results are less than average limit, so not need to evaluate the average.

Standard:	FCC PART 15.407	Test Distance:	3m
Test item:	Band edge	Power:	AC 110V/60Hz
Frequency:	5530MHz	Temp.(℃)/Hum.(%RH):	26(℃)/60%RH
Mode:	Mode 5	Date:	12/09/2016
Ant.Polar.:	Vertical		
Description:	Antenna:CO59-510347-A		

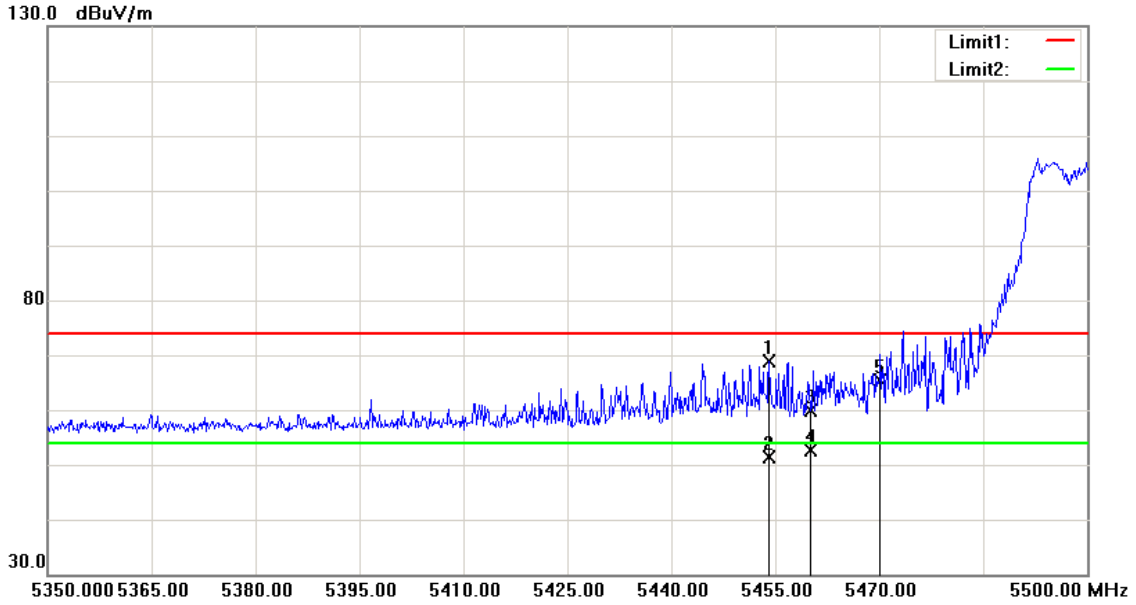

No.	Frequency (MHz)	Reading (dBuV)	Correct Factor (dB/m)	Result (dBuV/m)	Limit (dBuV/m)	Margin (dB)	Remark
1	5454.100	60.36	8.51	68.87	74.00	-5.13	peak
2	5454.100	42.89	8.51	51.40	54.00	-2.60	AVG
3	5460.000	51.43	8.51	59.94	74.00	-14.06	peak
4	5460.000	44.19	8.51	52.70	54.00	-1.30	AVG
5	5470.000	56.79	8.53	65.32	68.20	-2.88	peak

Note:1.Result (dBuV/m) = Correct Factor (dB/m) + Reading(dBuV).

2.Correction factor (dB/m) = Antenna Factor (dB/m) + Cable loss (dB) – Pre-Amplifier gain (dB).

3. When the peak results are less than average limit, so not need to evaluate the average.

4.4. Maximum Conducted Output Power and Transmit power control Measurement

■ **Limit**

Frequency Range (MHz)	FCC Limit
5.250 ~ 5.350 GHz	The lesser of 250mW (24dBm) or 11dBm + 10log (B)
5.470 ~ 5.725 GHz	The lesser of 250mW (24dBm) or 11dBm + 10log (B)

Note: Where B is the 26dB emission bandwidth in MHz.

According FCC KDB 662911 D01 v02r01 – for power measurements on IEEE802.11 devices,

Module : QCA9984 (EW-7955MAC)

Master mode

∗ CDD mode：Directional Gain = 7 dBi > 6dBi

Mode 2: IEEE 802.11a Link Mode

CDD mode power limit shall be reduced = 11dBm + 10log (B) - 1

=23.67 - 1 = 22.67 dBm (5.250 ~ 5.350 GHz)

CDD mode power limit shall be reduced = 11dBm + 10log (B) - 1

= 23.63 - 1 = 22.63 dBm (5.470 ~ 5.725 GHz)

∗ MIMO mode：Directional Gain = 10*log{[10^(G1/20)+10^(G2/20)+…+10^(Gn/20)]^2/NANT} = 13.02 dBi > 6dBi

Mode 3: IEEE 802.11ac 20MHz Link Mode

MIMO mode power limit shall be reduced = 11dBm + 10log (B) - 7.02

= 23.98 - 7.02 = 16.96 dBm (5.250 ~ 5.350 GHz)

MIMO mode power limit shall be reduced = 11dBm + 10log (B) - 7.02

= 23.86 - 7.02 = 16.84 dBm (5.470 ~ 5.725 GHz)

Mode 4: IEEE 802.11ac 40MHz Link Mode / Mode 5: IEEE 802.11ac 80MHz Link Mode

MIMO mode power limit shall be reduced = 11dBm + 10log (B) - 7.02

= 24 - 7.02 = 16.98 dBm (5.250 ~ 5.350 GHz)

MIMO mode power limit shall be reduced = 11dBm + 10log (B) - 7.02

= 24 - 7.02 = 16.98 dBm (5.470 ~ 5.725 GHz)

Module : QCA9990 (EW-7944MAC)

Master mode

∗ CDD mode：Directional Gain = 6 dBi = 6dBi

Mode 2: IEEE 802.11a Link Mode

CDD mode power limit shall be reduced = 11dBm + 10log (B) - 0

= 23.71 - 0 = 23.71 dBm (5.250 ~ 5.350 GHz)

CDD mode power limit shall be reduced = 11dBm + 10log (B) - 0

= 23.67 - 0 = 23.67 dBm (5.470 ~ 5.725 GHz)

∗ MIMO mode：Directional Gain = 10*log{[10^(G1/20)+10^(G2/20)+…+10^(Gn/20)]^2/NANT} = 12.02 dBi > 6dBi

Mode 3: IEEE 802.11ac 20MHz Link Mode

MIMO mode power limit shall be reduced = 11dBm + 10log (B) - 6.02

= 23.93 - 6.02 = 17.91 dBm (5.250 ~ 5.350 GHz)

MIMO mode power limit shall be reduced = 11dBm + 10log (B) - 6.02

= 23.88 - 6.02 = 17.86 dBm (5.470 ~ 5.725 GHz)

Mode 4: IEEE 802.11ac 40MHz Link Mode / Mode 5: IEEE 802.11ac 80MHz Link Mode

MIMO mode power limit shall be reduced = 11dBm + 10log (B) - 6.02

= 24 - 6.02 = 17.98 dBm (5.250 ~ 5.350 GHz)

MIMO mode power limit shall be reduced = 11dBm + 10log (B) - 6.02

= 24 - 6.02 = 17.98 dBm (5.470 ~ 5.725 GHz)

■ **Test Setup**

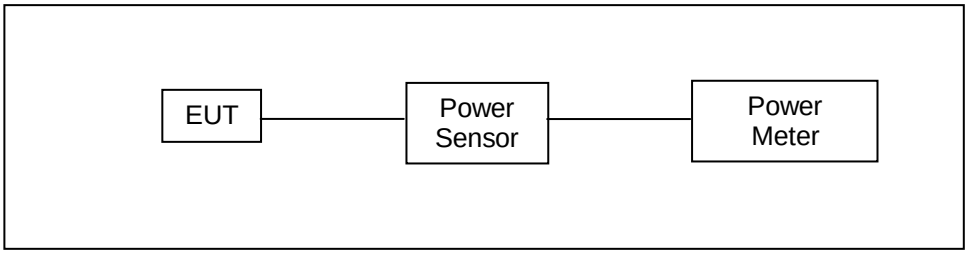

■ **Test Instruments**

Equipment	Manufacturer	Model Number	Serial Number	Cal. Date	Remark
Power Sensor	Anritsu	MA2411B	1126022	08/29/2016	1 year
Power Meter	Anritsu	ML2495A	1135009	08/29/2016	1 year
Microwave Cable	EMCI	EMC104-SM-SM-1 500	140303	02/23/2016	1 year
Test Site	ATL	TE05	TE05	N.C.R.	-----

Note: N.C.R. = No Calibration Request.

■ **Test Procedure**

The test is performed in accordance with KDB789033: D02 General UNII Test Procedures New Rules v01r02, Guidelines for Compliance Testing of Unlicensed National Information Infrastructure (U-NII) Devices

Section (E) Maximum Conducted Output Power

3. Measurement using a Power Meter (PM)

b) Method PM-G (Measurement using a gated RF average power meter)

■ **Test Result**

Module : QCA9984 (EW-7955MAC)

Test Mode		Mode 2: IEEE 802.11a Link Mode										
Frequency (MHz)	Data Rate	Max. Output Power										FCC Limit (dBm)
		ANT-0		ANT-1		ANT-2		ANT-3		ANT-0+1+2+3		
		(dBm)	(W)	(dBm)	(W)	(dBm)	(W)	(dBm)	(W)	(dBm)	(W)	
5260.0	6M	9.43	0.009	10.81	0.012	10.88	0.012	9.79	0.010	16.29	0.043	≤ 22.67
5280.0		9.22	0.008	11.07	0.013	10.83	0.012	9.93	0.010	**16.34**	**0.043**	
5300.0		9.30	0.009	10.97	0.013	10.88	0.012	9.85	0.010	16.33	0.043	
5320.0		8.69	0.007	10.13	0.010	9.88	0.010	8.98	0.008	15.48	0.035	
5500.0		4.68	0.003	7.47	0.006	6.21	0.004	6.25	0.004	**12.28**	**0.017**	≤ 22.63
5520.0		3.81	0.002	6.36	0.004	5.45	0.004	5.28	0.003	11.34	0.014	
5540.0		3.86	0.002	6.58	0.005	5.49	0.004	5.23	0.003	11.42	0.014	
5560.0		3.93	0.002	6.66	0.005	5.42	0.003	5.48	0.004	11.50	0.014	
5580.0		4.09	0.003	6.72	0.005	5.47	0.004	5.41	0.003	11.54	0.014	
5660.0		4.57	0.003	7.05	0.005	6.13	0.004	5.51	0.004	11.93	0.016	
5680.0		4.75	0.003	7.14	0.005	6.30	0.004	5.62	0.004	12.06	0.016	
5700.0		4.43	0.003	6.25	0.004	5.84	0.004	4.85	0.003	11.42	0.014	
5260.0	54M	9.38	0.009	10.75	0.012	10.84	0.012	9.74	0.009	16.24	0.042	≤ 16.65
5280.0		9.20	0.008	11.06	0.013	10.81	0.012	9.90	0.010	16.33	0.043	
5300.0		9.24	0.008	10.96	0.012	10.84	0.012	9.82	0.010	16.29	0.043	
5320.0		8.66	0.007	10.09	0.010	9.84	0.010	8.95	0.008	15.45	0.035	
5500.0		4.63	0.003	7.42	0.006	6.18	0.004	6.21	0.004	12.24	0.017	≤ 16.61
5520.0		3.83	0.002	6.33	0.004	5.42	0.003	5.24	0.003	11.31	0.014	
5540.0		3.83	0.002	6.54	0.005	5.47	0.004	5.20	0.003	11.39	0.014	
5560.0		3.90	0.002	6.62	0.005	5.36	0.003	5.44	0.003	11.46	0.014	
5580.0		4.06	0.003	6.66	0.005	5.44	0.003	5.35	0.003	11.49	0.014	
5660.0		4.52	0.003	7.03	0.005	6.10	0.004	5.45	0.004	11.89	0.015	
5680.0		4.72	0.003	7.08	0.005	6.25	0.004	5.56	0.004	12.01	0.016	
5700.0		4.41	0.003	6.20	0.004	5.79	0.004	4.82	0.003	11.39	0.014	

Note: The relevant measured result has the offset with cable loss already.

Test Mode		Mode 3: IEEE 802.11ac 20MHz Link Mode										
Frequency (MHz)	Data Rate	Max. Output Power										FCC Limit (dBm)
		ANT-0		ANT-1		ANT-2		ANT-3		ANT-0+1+2+3		
		(dBm)	(W)	(dBm)	(W)	(dBm)	(W)	(dBm)	(W)	(dBm)	(W)	
5260.0	26M	9.13	0.008	10.45	0.011	10.47	0.011	9.41	0.009	**15.93**	**0.039**	≤ 16.96
5280.0		8.75	0.007	10.44	0.011	10.39	0.011	9.50	0.009	15.85	0.038	
5300.0		8.67	0.007	10.42	0.011	10.29	0.011	9.65	0.009	15.83	0.038	
5320.0		8.69	0.007	10.34	0.011	9.86	0.010	9.42	0.009	15.64	0.037	
5500.0		4.16	0.003	7.13	0.005	6.13	0.004	6.23	0.004	12.06	0.016	≤ 16.84
5520.0		3.98	0.003	7.15	0.005	5.54	0.004	5.79	0.004	11.78	0.015	
5540.0		4.02	0.003	7.32	0.005	5.69	0.004	5.92	0.004	11.91	0.016	
5560.0		4.17	0.003	7.24	0.005	5.49	0.004	5.94	0.004	11.87	0.015	
5580.0		4.32	0.003	7.21	0.005	5.68	0.004	5.84	0.004	11.90	0.015	
5660.0		5.12	0.003	7.53	0.006	6.39	0.004	6.04	0.004	12.38	0.017	
5680.0		5.32	0.003	7.30	0.005	6.58	0.005	6.23	0.004	**12.44**	**0.018**	
5700.0		4.24	0.003	6.55	0.005	6.33	0.004	5.34	0.003	11.73	0.015	
5260.0	312M	9.10	0.008	10.42	0.011	10.42	0.011	9.37	0.009	15.89	0.039	≤ 16.96
5280.0		8.73	0.007	10.39	0.011	10.33	0.011	9.45	0.009	15.80	0.038	
5300.0		8.66	0.007	10.41	0.011	10.24	0.011	9.60	0.009	15.80	0.038	
5320.0		8.68	0.007	10.29	0.011	9.81	0.010	9.38	0.009	15.60	0.036	
5500.0		4.14	0.003	7.12	0.005	6.08	0.004	6.22	0.004	12.04	0.016	≤ 16.84
5520.0		3.94	0.002	7.11	0.005	5.53	0.004	5.77	0.004	11.75	0.015	
5540.0		4.01	0.003	7.31	0.005	5.65	0.004	5.89	0.004	11.89	0.015	
5560.0		4.12	0.003	7.21	0.005	5.47	0.004	5.91	0.004	11.84	0.015	
5580.0		4.28	0.003	7.20	0.005	5.65	0.004	5.78	0.004	11.87	0.015	
5660.0		5.09	0.003	7.50	0.006	6.37	0.004	5.98	0.004	12.34	0.017	
5680.0		5.31	0.003	7.26	0.005	6.55	0.005	6.19	0.004	12.40	0.017	
5700.0		4.22	0.003	6.54	0.005	6.27	0.004	5.28	0.003	11.69	0.015	

Note: The relevant measured result has the offset with cable loss already.

Test Mode		Mode 4: IEEE 802.11ac 40MHz Link Mode										
Frequency (MHz)	Data Rate	Max. Output Power										FCC Limit (dBm)
		ANT-0		ANT-1		ANT-2		ANT-3		ANT-0+1+2+3		
		(dBm)	(W)	(dBm)	(W)	(dBm)	(W)	(dBm)	(W)	(dBm)	(W)	
5270.0	54M	9.65	0.009	11.22	0.013	10.99	0.013	10.26	0.011	**16.59**	**0.046**	≤ 16.98
5310.0		9.57	0.009	11.19	0.013	10.98	0.013	10.32	0.011	16.58	0.046	
5510.0		5.36	0.003	8.24	0.007	7.32	0.005	7.14	0.005	13.15	0.021	
5550.0		5.12	0.003	7.72	0.006	6.60	0.005	7.02	0.005	12.74	0.019	
5670.0		6.14	0.004	8.31	0.007	7.32	0.005	7.08	0.005	**13.30**	**0.021**	
5270.0	720M	9.60	0.009	11.17	0.013	10.96	0.012	10.24	0.011	16.56	0.045	
5310.0		9.55	0.009	11.16	0.013	10.94	0.012	10.30	0.011	16.55	0.045	
5510.0		5.33	0.003	8.21	0.007	7.30	0.005	7.12	0.005	13.13	0.021	
5550.0		5.09	0.003	7.67	0.006	6.56	0.005	6.98	0.005	12.69	0.019	
5670.0		6.09	0.004	8.26	0.007	7.27	0.005	7.06	0.005	13.26	0.021	

Test Mode		Mode 5: IEEE 802.11ac 80MHz Link Mode										
Frequency (MHz)	Data Rate	Max. Output Power										FCC Limit (dBm)
		ANT-0		ANT-1		ANT-2		ANT-3		ANT-0+1+2+3		
		(dBm)	(W)	(dBm)	(W)	(dBm)	(W)	(dBm)	(W)	(dBm)	(W)	
5290.0	117.2M	9.24	0.008	10.71	0.012	10.90	0.012	9.95	0.010	**16.27**	**0.042**	≤ 16.98
5530.0		6.64	0.005	9.01	0.008	8.32	0.007	8.06	0.006	**14.11**	**0.026**	
5290.0	1560M	9.22	0.008	10.68	0.012	10.87	0.012	9.89	0.010	16.23	0.042	
5530.0		6.63	0.005	8.97	0.008	8.28	0.007	8.03	0.006	14.08	0.026	

Note: The relevant measured result has the offset with cable loss already.

Test Mode		Mode 2: IEEE 802.11a Link Mode				
Frequency (MHz)	Data Rate	Transmit power control				FCC Limit (dBm)
		ANT-0+1+2+3				
		Max. Outup Power	Directional Gain	E.I.R.P.		
		(dBm)	(dBi)	(dBm)	(W)	
5260.0	6M	10.57	7.00	17.57	0.057	≦24
5280.0		10.55	7.00	17.55	0.057	
5300.0		10.56	7.00	17.56	0.057	
5320.0		9.68	7.00	16.68	0.047	
5500.0		6.18	7.00	13.18	0.021	
5520.0		5.34	7.00	12.34	0.017	
5540.0		5.35	7.00	12.35	0.017	
5560.0		5.41	7.00	12.41	0.017	
5580.0		5.44	7.00	12.44	0.018	
5660.0		5.94	7.00	12.94	0.020	
5680.0		6.09	7.00	13.09	0.020	
5700.0		5.56	7.00	12.56	0.018	
5260.0	54M	10.57	7.00	17.57	0.057	
5280.0		10.52	7.00	17.52	0.057	
5300.0		10.54	7.00	17.54	0.057	
5320.0		9.64	7.00	16.64	0.046	
5500.0		6.15	7.00	13.15	0.021	
5520.0		5.30	7.00	12.30	0.017	
5540.0		5.32	7.00	12.32	0.017	
5560.0		5.38	7.00	12.38	0.017	
5580.0		5.41	7.00	12.41	0.017	
5660.0		5.92	7.00	12.92	0.020	
5680.0		6.06	7.00	13.06	0.020	
5700.0		5.52	7.00	12.52	0.018	

Note: EIRP(dBm)=Conducted power(dBm) + Directional Gain (dBi)

Test Mode		Mode 3: IEEE 802.11ac 20MHz Link Mode				
Frequency (MHz)	Data Rate	Transmit power control				FCC Limit (dBm)
		ANT-0+1+2+3				
		Max. Outup Power	Directional Gain	E.I.R.P.		
		(dBm)	(dBi)	(dBm)	(W)	
5260.0	26M	10.26	13.02	23.28	0.213	≦24
5280.0		10.15	13.02	23.17	0.208	
5300.0		10.13	13.02	23.15	0.207	
5320.0		9.82	13.02	22.84	0.192	
5500.0		6.08	13.02	19.10	0.081	
5520.0		5.60	13.02	18.62	0.073	
5540.0		5.73	13.02	18.75	0.075	
5560.0		5.66	13.02	18.68	0.074	
5580.0		5.76	13.02	18.78	0.075	
5660.0		6.35	13.02	19.37	0.086	
5680.0		6.56	13.02	19.58	0.091	
5700.0		5.98	13.02	19.00	0.079	
5260.0	312M	10.23	13.02	23.25	0.212	
5280.0		10.11	13.02	23.13	0.205	
5300.0		10.10	13.02	23.12	0.205	
5320.0		9.79	13.02	22.81	0.191	
5500.0		6.04	13.02	19.06	0.080	
5520.0		5.58	13.02	18.60	0.072	
5540.0		5.70	13.02	18.72	0.075	
5560.0		5.61	13.02	18.63	0.073	
5580.0		5.72	13.02	18.74	0.075	
5660.0		6.31	13.02	19.33	0.086	
5680.0		6.50	13.02	19.52	0.090	
5700.0		5.94	13.02	18.96	0.079	

Note: EIRP(dBm)=Conducted power(dBm) + Directional Gain (dBi)

Test Mode		Mode 4: IEEE 802.11ac 40MHz Link Mode				
Frequency (MHz)	Data Rate	Transmit power control				FCC Limit (dBm)
		ANT-0+1+2+3				
		Max. Outup Power	Directional Gain	E.I.R.P.		
		(dBm)	(dBi)	(dBm)	(W)	
5270.0	54M	10.72	13.02	23.74	0.236	≦24
5310.0		10.72	13.02	23.74	0.237	
5510.0		7.07	13.02	20.09	0.102	
5550.0		6.60	13.02	19.62	0.092	
5670.0		7.21	13.02	20.23	0.105	
5270.0	720M	10.68	13.02	23.70	0.234	
5310.0		10.68	13.02	23.70	0.234	
5510.0		7.05	13.02	20.07	0.102	
5550.0		6.56	13.02	19.58	0.091	
5670.0		7.18	13.02	20.20	0.105	

Test Mode		Mode 5: IEEE 802.11ac 80MHz Link Mode				
Frequency (MHz)	Data Rate	Transmit power control				FCC Limit (dBm)
		ANT-0+1+2+3				
		Max. Outup Power	Directional Gain	E.I.R.P.		
		(dBm)	(dBi)	(dBm)	(W)	
5290.0	117.2M	10.65	13.02	23.67	0.233	≦24
5530.0		8.23	13.02	21.25	0.133	
5290.0	1560M	10.61	13.02	23.63	0.231	
5530.0		8.18	13.02	21.20	0.132	

Note: EIRP(dBm)=Conducted power(dBm) + Directional Gain (dBi)

Module : QCA9990 (EW-7944MAC)

Test Mode		Mode 2: IEEE 802.11a Link Mode										
Frequency (MHz)	Data Rate	Max. Output Power										FCC Limit (dBm)
		ANT-0		ANT-1		ANT-2		ANT-3		ANT-0+1+2+3		
		(dBm)	(W)	(dBm)	(W)	(dBm)	(W)	(dBm)	(W)	(dBm)	(W)	
5260.0	6M	9.21	0.008	10.69	0.012	10.12	0.010	9.84	0.010	16.02	0.040	≤ 23.71
5280.0		9.19	0.008	10.90	0.012	10.07	0.010	9.79	0.010	16.05	0.040	
5300.0		9.30	0.009	10.85	0.012	10.04	0.010	9.89	0.010	16.08	0.041	
5320.0		9.74	0.009	10.87	0.012	9.95	0.010	9.92	0.010	**16.16**	**0.041**	
5500.0		8.81	0.008	10.05	0.010	9.61	0.009	9.75	0.009	**15.60**	**0.036**	≤ 23.67
5520.0		8.41	0.007	9.32	0.009	9.06	0.008	9.12	0.008	15.01	0.032	
5540.0		8.31	0.007	9.29	0.008	9.20	0.008	9.07	0.008	15.00	0.032	
5560.0		8.30	0.007	9.45	0.009	9.24	0.008	9.15	0.008	15.08	0.032	
5580.0		8.23	0.007	9.48	0.009	9.28	0.008	9.09	0.008	15.07	0.032	
5660.0		7.97	0.006	9.53	0.009	9.40	0.009	8.89	0.008	15.01	0.032	
5680.0		7.99	0.006	9.65	0.009	9.53	0.009	8.87	0.008	15.08	0.032	
5700.0		8.20	0.007	9.72	0.009	9.54	0.009	9.05	0.008	15.19	0.033	
5260.0	54M	9.08	0.008	10.63	0.012	10.00	0.010	9.79	0.010	15.93	0.039	≤ 17.69
5280.0		9.05	0.008	10.81	0.012	10.04	0.010	9.64	0.009	15.95	0.039	
5300.0		9.25	0.008	10.72	0.012	9.89	0.010	9.70	0.009	15.94	0.039	
5320.0		9.69	0.009	10.77	0.012	9.91	0.010	9.73	0.009	16.07	0.040	
5500.0		8.75	0.007	10.03	0.010	9.49	0.009	9.62	0.009	15.52	0.036	≤ 17.65
5520.0		8.31	0.007	9.26	0.008	8.91	0.008	8.97	0.008	14.90	0.031	
5540.0		8.21	0.007	9.21	0.008	9.11	0.008	8.88	0.008	14.89	0.031	
5560.0		8.16	0.007	9.35	0.009	9.22	0.008	9.10	0.008	15.00	0.032	
5580.0		8.18	0.007	9.36	0.009	9.16	0.008	8.91	0.008	14.95	0.031	
5660.0		7.79	0.006	9.47	0.009	9.30	0.009	8.76	0.008	14.90	0.031	
5680.0		7.91	0.006	9.61	0.009	9.50	0.009	8.71	0.007	15.01	0.032	
5700.0		8.18	0.007	9.71	0.009	9.47	0.009	8.93	0.008	15.13	0.033	

Note: The relevant measured result has the offset with cable loss already.

Test Mode		Mode 3: IEEE 802.11ac 20MHz Link Mode										
Frequency (MHz)	Data Rate	Max. Output Power										FCC Limit (dBm)
		ANT-0		ANT-1		ANT-2		ANT-3		ANT-0+1+2+3		
		(dBm)	(W)	(dBm)	(W)	(dBm)	(W)	(dBm)	(W)	(dBm)	(W)	
5260.0	26M	8.93	0.008	10.71	0.012	10.12	0.010	9.76	0.009	15.95	0.039	≤ 17.91
5280.0		9.07	0.008	10.80	0.012	10.13	0.010	9.73	0.009	16.00	0.040	
5300.0		9.23	0.008	10.83	0.012	10.14	0.010	9.81	0.010	16.06	0.040	
5320.0		9.61	0.009	10.87	0.012	10.01	0.010	9.80	0.010	**16.12**	**0.041**	
5500.0		9.03	0.008	10.55	0.011	10.02	0.010	10.16	0.010	**16.00**	**0.040**	≤ 17.86
5520.0		8.27	0.007	9.64	0.009	9.50	0.009	9.54	0.009	15.29	0.034	
5540.0		8.22	0.007	9.88	0.010	9.49	0.009	9.47	0.009	15.33	0.034	
5560.0		8.25	0.007	9.66	0.009	9.54	0.009	9.55	0.009	15.31	0.034	
5580.0		8.32	0.007	9.61	0.009	9.52	0.009	9.51	0.009	15.29	0.034	
5660.0		8.15	0.007	9.68	0.009	9.66	0.009	9.31	0.009	15.26	0.034	
5680.0		8.25	0.007	9.78	0.010	9.78	0.010	9.30	0.009	15.34	0.034	
5700.0		7.92	0.006	9.21	0.008	9.27	0.008	8.92	0.008	14.88	0.031	
5260.0	312M	8.79	0.008	10.68	0.012	10.01	0.010	9.51	0.009	15.82	0.038	≤ 17.91
5280.0		8.95	0.008	10.76	0.012	10.05	0.010	9.68	0.009	15.93	0.039	
5300.0		9.15	0.008	10.75	0.012	9.97	0.010	9.71	0.009	15.95	0.039	
5320.0		9.39	0.009	10.79	0.012	9.88	0.010	9.57	0.009	15.96	0.039	
5500.0		8.87	0.008	10.43	0.011	9.81	0.010	9.88	0.010	15.80	0.038	≤ 17.86
5520.0		8.18	0.007	9.57	0.009	9.35	0.009	9.38	0.009	15.17	0.033	
5540.0		8.18	0.007	9.75	0.009	9.37	0.009	9.25	0.008	15.20	0.033	
5560.0		8.14	0.007	9.52	0.009	9.34	0.009	9.32	0.009	15.13	0.033	
5580.0		8.24	0.007	9.48	0.009	9.44	0.009	9.27	0.008	15.16	0.033	
5660.0		8.03	0.006	9.57	0.009	9.51	0.009	9.14	0.008	15.13	0.033	
5680.0		8.17	0.007	9.69	0.009	9.52	0.009	9.04	0.008	15.16	0.033	
5700.0		7.78	0.006	9.14	0.008	9.07	0.008	8.79	0.008	14.75	0.030	

Note: The relevant measured result has the offset with cable loss already.

Test Mode		Mode 4: IEEE 802.11ac 40MHz Link Mode										
Frequency (MHz)	Data Rate	Max. Output Power										FCC Limit (dBm)
		ANT-0		ANT-1		ANT-2		ANT-3		ANT-0+1+2+3		
		(dBm)	(W)	(dBm)	(W)	(dBm)	(W)	(dBm)	(W)	(dBm)	(W)	
5270.0	54M	10.60	0.011	12.20	0.017	11.79	0.015	11.77	0.015	17.65	0.058	≤ 17.98
5310.0		10.74	0.012	12.40	0.017	11.88	0.015	11.69	0.015	**17.74**	**0.059**	
5510.0		10.40	0.011	11.78	0.015	11.47	0.014	11.53	0.014	**17.35**	**0.054**	≤ 17.98
5550.0		9.91	0.010	11.31	0.014	10.97	0.013	11.09	0.013	16.87	0.049	
5670.0		8.65	0.007	10.17	0.010	10.32	0.011	9.76	0.009	15.79	0.038	
5270.0	720M	10.41	0.011	12.02	0.016	11.75	0.015	11.75	0.015	17.55	0.057	≤ 17.98
5310.0		10.55	0.011	12.24	0.017	11.71	0.015	11.59	0.014	17.59	0.057	
5510.0		10.34	0.011	11.65	0.015	11.37	0.014	11.37	0.014	17.23	0.053	≤ 17.98
5550.0		9.89	0.010	11.23	0.013	10.88	0.012	10.98	0.013	16.79	0.048	
5670.0		8.46	0.007	10.03	0.010	10.22	0.011	9.57	0.009	15.64	0.037	

Test Mode		Mode 5: IEEE 802.11ac 80MHz Link Mode										
Frequency (MHz)	Data Rate	Max. Output Power										FCC Limit (dBm)
		ANT-0		ANT-1		ANT-2		ANT-3		ANT-0+1+2+3		
		(dBm)	(W)	(dBm)	(W)	(dBm)	(W)	(dBm)	(W)	(dBm)	(W)	
5290.0	117.2M	10.27	0.011	11.94	0.016	11.25	0.013	11.18	0.013	**17.22**	**0.053**	≤ 17.98
5530.0		10.79	0.012	12.14	0.016	11.95	0.016	11.73	0.015	**17.70**	**0.059**	≤ 17.98
5290.0	1560M	10.24	0.011	11.81	0.015	11.23	0.013	11.11	0.013	17.15	0.052	≤ 17.98
5530.0		10.60	0.011	12.01	0.016	11.81	0.015	11.65	0.015	17.57	0.057	≤ 17.98

Note: The relevant measured result has the offset with cable loss already.

Test Mode		Mode 2: IEEE 802.11a Link Mode				
Frequency (MHz)	Data Rate	Transmit power control				FCC Limit (dBm)
		ANT-0+1+2+3				
		Max. Outup Power	Directional Gain	E.I.R.P.		
		(dBm)	(dBi)	(dBm)	(W)	
5260.0	6M	10.30	6.00	16.30	0.043	≦24
5280.0		10.32	6.00	16.32	0.043	
5300.0		10.36	6.00	16.36	0.043	
5320.0		10.44	6.00	16.44	0.044	
5500.0		9.88	6.00	15.88	0.039	
5520.0		9.29	6.00	15.29	0.034	
5540.0		9.27	6.00	15.27	0.034	
5560.0		9.36	6.00	15.36	0.034	
5580.0		9.35	6.00	15.35	0.034	
5660.0		9.29	6.00	15.29	0.034	
5680.0		9.36	6.00	15.36	0.034	
5700.0		9.45	6.00	15.45	0.035	
5260.0	54M	10.27	6.00	16.27	0.042	
5280.0		10.28	6.00	16.28	0.042	
5300.0		10.32	6.00	16.32	0.043	
5320.0		10.41	6.00	16.41	0.044	
5500.0		9.84	6.00	15.84	0.038	
5520.0		9.27	6.00	15.27	0.034	
5540.0		9.25	6.00	15.25	0.034	
5560.0		9.32	6.00	15.32	0.034	
5580.0		9.30	6.00	15.30	0.034	
5660.0		9.26	6.00	15.26	0.034	
5680.0		9.31	6.00	15.31	0.034	
5700.0		9.42	6.00	15.42	0.035	

Note: EIRP(dBm)=Conducted power(dBm) + Directional Gain (dBi)

Test Mode		Mode 3: IEEE 802.11ac 20MHz Link Mode				
Frequency (MHz)	Data Rate	Transmit power control				FCC Limit (dBm)
		ANT-0+1+2+3				
		Max. Outup Power	Directional Gain	E.I.R.P.		
		(dBm)	(dBi)	(dBm)	(W)	
5260.0	26M	10.27	12.02	22.29	0.169	≦24
5280.0		10.32	12.02	22.34	0.171	
5300.0		10.38	12.02	22.40	0.174	
5320.0		10.45	12.02	22.47	0.177	
5500.0		10.31	12.02	22.33	0.171	
5520.0		9.60	12.02	21.62	0.145	
5540.0		9.66	12.02	21.68	0.147	
5560.0		9.63	12.02	21.65	0.146	
5580.0		9.61	12.02	21.63	0.146	
5660.0		9.58	12.02	21.60	0.144	
5680.0		9.65	12.02	21.67	0.147	
5700.0		9.20	12.02	21.22	0.132	
5260.0	312M	10.24	12.02	22.26	0.168	
5280.0		10.26	12.02	22.28	0.169	
5300.0		10.34	12.02	22.36	0.172	
5320.0		10.43	12.02	22.45	0.176	
5500.0		10.27	12.02	22.29	0.169	
5520.0		9.57	12.02	21.59	0.144	
5540.0		9.62	12.02	21.64	0.146	
5560.0		9.60	12.02	21.62	0.145	
5580.0		9.58	12.02	21.60	0.145	
5660.0		9.54	12.02	21.56	0.143	
5680.0		9.61	12.02	21.63	0.145	
5700.0		9.15	12.02	21.17	0.131	

Note: EIRP(dBm)=Conducted power(dBm) + Directional Gain (dBi)

Test Mode		Mode 4: IEEE 802.11ac 40MHz Link Mode				
Frequency (MHz)	Data Rate	Transmit power control				FCC Limit (dBm)
		ANT-0+1+2+3				
		Max. Outup Power	Directional Gain	E.I.R.P.		
		(dBm)	(dBi)	(dBm)	(W)	
5270.0	54M	11.85	12.02	23.87	0.244	≦24
5310.0		11.91	12.02	23.93	0.247	
5510.0		11.54	12.02	23.56	0.227	
5550.0		11.07	12.02	23.09	0.204	
5670.0		9.98	12.02	22.00	0.158	
5270.0	720M	11.80	12.02	23.82	0.241	
5310.0		11.87	12.02	23.89	0.245	
5510.0		11.52	12.02	23.54	0.226	
5550.0		11.03	12.02	23.05	0.202	
5670.0		9.96	12.02	21.98	0.158	

Test Mode		Mode 5: IEEE 802.11ac 80MHz Link Mode				
Frequency (MHz)	Data Rate	Transmit power control				FCC Limit (dBm)
		ANT-0+1+2+3				
		Max. Outup Power	Directional Gain	E.I.R.P.		
		(dBm)	(dBi)	(dBm)	(W)	
5290.0	117.2M	11.54	12.02	23.56	0.227	≦24
5530.0		11.82	12.02	23.84	0.242	
5290.0	1560M	11.51	12.02	23.53	0.225	
5530.0		11.78	12.02	23.80	0.240	

Note: EIRP(dBm)=Conducted power(dBm) + Directional Gain (dBi)

4.5. 26dB RF Bandwidth Measurement

■ **Limit**

N/A

■ **Test Setup**

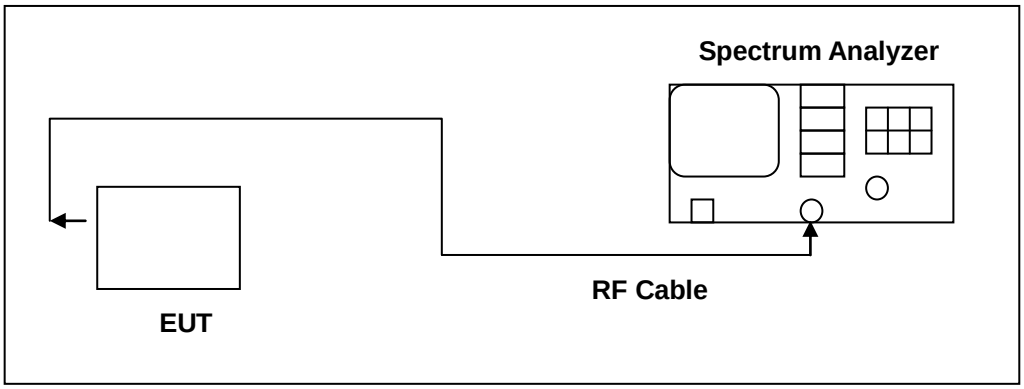

■ **Test Instruments**

Equipment	Manufacturer	Model Number	Serial Number	Cal. Date	Remark
Spectrum Analyzer	Agilent	E4445A	MY45300744	12/19/2016	1 year
Microwave Cable	EMCI	EMC104-SM-SM-1 500	140303	02/23/2016	1 year
Test Site	ATL	TE05	TE05	N.C.R.	-----

Note: N.C.R. = No Calibration Request.

■ **Test Procedure**

The test is performed in accordance with KDB789033: D02 General UNII Test Procedures New Rules v01r02, Guidelines for Compliance Testing of Unlicensed National Information Infrastructure (U-NII) Devices - Part 15, Subpart E.

Spectrum Parameter	Setting
Attenuation	Auto
Span Frequency	>26dB Bandwidth
RBW	Approximately 1% of the emission bandwidth
VBW	VBW > RBW
Detector	Peak
Trace	Max Hold
Sweep Time	Auto

■ **Test Result**

Module : QCA9984 (EW-7955MAC)

Test Mode	Mode 2: IEEE 802.11a Link Mode			
Frequency (MHz)	26dB Bandwidth (MHz)			
	ANT-0	ANT-1	ANT-2	ANT-3
5260.0	19.530	19.400	18.960	19.240
5280.0	19.030	19.400	18.510	19.350
5320.0	19.510	18.790	18.930	19.070
5500.0	18.680	18.620	19.570	18.620
5560.0	18.790	18.610	18.970	18.340
5700.0	19.300	19.410	19.340	18.320

Test Mode	Mode 3: IEEE 802.11ac 20MHz Link Mode			
Frequency (MHz)	26dB Bandwidth (MHz)			
	ANT-0	ANT-1	ANT-2	ANT-3
5260.0	19.840	19.960	19.860	20.280
5280.0	20.240	20.350	20.340	20.370
5320.0	19.850	19.960	20.110	20.090
5500.0	20.140	19.820	19.980	19.830
5560.0	19.640	19.600	19.610	19.340
5700.0	20.650	20.100	19.540	19.740

Test Mode	Mode 4: IEEE 802.11ac 40MHz Link Mode			
Frequency (MHz)	26dB Bandwidth (MHz)			
	ANT-0	ANT-1	ANT-2	ANT-3
5270.0	40.390	40.790	39.800	40.000
5310.0	40.470	39.850	39.780	39.910
5510.0	39.420	39.560	39.990	39.700
5550.0	39.790	39.620	40.010	39.870
5670.0	39.900	39.780	39.710	40.030

Test Mode	Mode 5: IEEE 802.11ac 80MHz Link Mode			
Frequency (MHz)	26dB Bandwidth (MHz)			
	ANT-0	ANT-1	ANT-2	ANT-3
5290.0	80.220	79.960	79.600	79.900
5530.0	79.530	79.460	80.290	79.430

Module : QCA9990 (EW-7944MAC)

Test Mode	Mode 2: IEEE 802.11a Link Mode			
Frequency (MHz)	26dB Bandwidth (MHz)			
	ANT-0	ANT-1	ANT-2	ANT-3
5260.0	18.880	19.200	19.170	18.740
5280.0	19.010	19.240	19.190	18.660
5320.0	18.920	19.060	19.180	18.850
5500.0	18.960	18.980	18.890	18.890
5560.0	19.080	18.820	18.570	18.940
5700.0	19.290	19.200	18.500	18.670

Test Mode	Mode 3: IEEE 802.11ac 20MHz Link Mode			
Frequency (MHz)	26dB Bandwidth (MHz)			
	ANT-0	ANT-1	ANT-2	ANT-3
5260.0	19.650	19.970	20.440	19.750
5280.0	19.660	20.250	20.110	19.820
5320.0	19.670	20.070	20.220	19.740
5500.0	19.930	20.070	20.050	19.800
5560.0	19.950	20.010	19.530	19.860
5700.0	19.940	19.890	19.420	19.840

Test Mode	Mode 4: IEEE 802.11ac 40MHz Link Mode			
Frequency (MHz)	26dB Bandwidth (MHz)			
	ANT-0	ANT-1	ANT-2	ANT-3
5270.0	40.020	40.200	39.820	39.990
5310.0	40.050	39.870	39.820	40.180
5510.0	39.880	40.240	40.100	39.990
5550.0	39.640	40.130	39.970	39.740
5670.0	39.670	39.980	39.930	39.710

Test Mode	Mode 5: IEEE 802.11ac 80MHz Link Mode			
Frequency (MHz)	26dB Bandwidth (MHz)			
	ANT-0	ANT-1	ANT-2	ANT-3
5290.0	85.410	86.470	83.950	85.480
5530.0	82.900	83.850	84.360	84.980

■ **Test Graphs**

Module : QCA9984 (EW-7955MAC)

Mode 2: IEEE 802.11a Link Mode	
ANT-0	
5260 MHz	
5280 MHz	

Mode 2: IEEE 802.11a Link Mode	
ANT-0	
5320 MHz	

Mode 2: IEEE 802.11a Link Mode	
ANT-0	
5500	
5560	
5700	

Mode 3: IEEE 802.11ac 20MHz Link Mode	
ANT-0	
5260 MHz	
5280 MHz	
5320 MHz	

Mode 3: IEEE 802.11ac 20MHz Link Mode	
ANT-0	
5500 MHz	
5560 MHz	
5700 MHz	

Mode 4: IEEE 802.11ac 40MHz Link Mode	
ANT-0	
5270 MHz	
5310 MHz	
5510 MHz	

Mode 4: IEEE 802.11ac 40MHz Link Mode	
ANT-0	
5550 MHz	
5670 MHz	

Mode 5: IEEE 802.11ac 80MHz Link Mode	
ANT-0	
5290 MHz	
5530 MHz	

Mode 2: IEEE 802.11a Link Mode	
ANT-1	
5260 MHz	
5280 MHz	
5320 MHz	

Mode 2: IEEE 802.11a Link Mode	
ANT-1	
5500 MHz	
5560 MHz	
5700 MHz	

Mode 3: IEEE 802.11ac 20MHz Link Mode	
ANT-1	
5260 MHz	
5280 MHz	
5320 MHz	

Mode 3: IEEE 802.11ac 20MHz Link Mode	
ANT-1	
5500 MHz	
5560 MHz	
5700 MHz	

Mode 4: IEEE 802.11ac 40MHz Link Mode	
ANT-1	
5270 MHz	
5310 MHz	
5510 MHz	

Mode 4: IEEE 802.11ac 40MHz Link Mode	
ANT-1	
5550 MHz	
5670 MHz	

Mode 5: IEEE 802.11ac 80MHz Link Mode	
ANT-1	
5290 MHz	
5530 MHz	

Mode 2: IEEE 802.11a Link Mode	
ANT-2	
5260 MHz	
5280 MHz	
5320 MHz	

Mode 2: IEEE 802.11a Link Mode	
ANT-2	
5500 MHz	
5560 MHz	
5700 MHz	

Mode 3: IEEE 802.11ac 20MHz Link Mode	
ANT-2	
5260 MHz	
5280 MHz	
5320 MHz	

Mode 3: IEEE 802.11ac 20MHz Link Mode	
ANT-2	
5500 MHz	
5560 MHz	
5700 MHz	

Mode 4: IEEE 802.11ac 40MHz Link Mode	
ANT-2	
5270 MHz	
5310 MHz	
5510 MHz	

Mode 4: IEEE 802.11ac 40MHz Link Mode	
ANT-2	
5550 MHz	
5670 MHz	

Mode 5: IEEE 802.11ac 80MHz Link Mode	
ANT-2	
5290 MHz	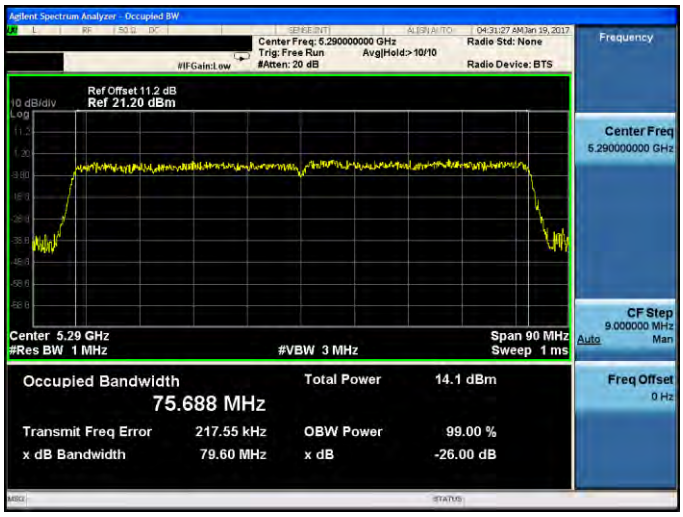
5530 MHz	

Mode 2: IEEE 802.11a Link Mode	
ANT-3	
5260 MHz	
5280 MHz	
5320 MHz	

Mode 2: IEEE 802.11a Link Mode	
ANT-3	
5500 MHz	
5560 MHz	
5700 MHz	

Mode 3: IEEE 802.11ac 20MHz Link Mode	
ANT-3	
5260 MHz	
5280 MHz	
5320 MHz	

Mode 3: IEEE 802.11ac 20MHz Link Mode	
ANT-3	
5500 MHz	
5560 MHz	
5700 MHz	

Mode 4: IEEE 802.11ac 40MHz Link Mode	
ANT-3	
5270 MHz	
5310 MHz	
5510 MHz	

Mode 4: IEEE 802.11ac 40MHz Link Mode	
ANT-3	
5550 MHz	
5670 MHz	

Mode 5: IEEE 802.11ac 80MHz Link Mode	
ANT-3	
5290 MHz	
5530 MHz	

Module : QCA9990 (EW-7944MAC)

Mode 2: IEEE 802.11a Link Mode	
ANT-0	
5260 MHz	
5280 MHz	

Mode 2: IEEE 802.11a Link Mode	
ANT-0	
5320 MHz	

Mode 2: IEEE 802.11a Link Mode	
ANT-0	
5500	
5560	
5700	

Mode 3: IEEE 802.11ac 20MHz Link Mode	
ANT-0	
5260 MHz	
5280 MHz	
5320 MHz	

Mode 3: IEEE 802.11ac 20MHz Link Mode	
ANT-0	
5500 MHz	
5560 MHz	
5700 MHz	

Mode 4: IEEE 802.11ac 40MHz Link Mode	
ANT-0	
5270 MHz	
5310 MHz	
5510 MHz	

Mode 4: IEEE 802.11ac 40MHz Link Mode	
ANT-0	
5550 MHz	
5670 MHz	

Mode 5: IEEE 802.11ac 80MHz Link Mode	
ANT-0	
5290 MHz	
5530 MHz	

Mode 2: IEEE 802.11a Link Mode	
ANT-1	
5260 MHz	
5280 MHz	
5320 MHz	

Mode 2: IEEE 802.11a Link Mode	
ANT-1	
5500 MHz	
5560 MHz	
5700 MHz	

Mode 3: IEEE 802.11ac 20MHz Link Mode	
ANT-1	
5260 MHz	
5280 MHz	
5320 MHz	

Mode 3: IEEE 802.11ac 20MHz Link Mode	
ANT-1	
5500 MHz	
5560 MHz	
5700 MHz	

Mode 4: IEEE 802.11ac 40MHz Link Mode	
ANT-1	
5270 MHz	
5310 MHz	
5510 MHz	

Mode 4: IEEE 802.11ac 40MHz Link Mode	
ANT-1	
5550 MHz	
5670 MHz	

Mode 5: IEEE 802.11ac 80MHz Link Mode	
ANT-1	
5290 MHz	
5530 MHz	

Mode 2: IEEE 802.11a Link Mode	
ANT-2	
5260 MHz	
5280 MHz	
5320 MHz	

Mode 2: IEEE 802.11a Link Mode	
ANT-2	
5500 MHz	
5560 MHz	
5700 MHz	

Mode 3: IEEE 802.11ac 20MHz Link Mode	
ANT-2	
5260 MHz	
5280 MHz	
5320 MHz	

Mode 3: IEEE 802.11ac 20MHz Link Mode	
ANT-2	
5500 MHz	
5560 MHz	
5700 MHz	

Mode 4: IEEE 802.11ac 40MHz Link Mode	
ANT-2	
5270 MHz	
5310 MHz	
5510 MHz	

Mode 4: IEEE 802.11ac 40MHz Link Mode	
ANT-2	
5550 MHz	
5670 MHz	

Mode 5: IEEE 802.11ac 80MHz Link Mode	
ANT-2	
5290 MHz	
5530 MHz	

Mode 2: IEEE 802.11a Link Mode	
ANT-3	
5260 MHz	
5280 MHz	
5320 MHz	

Mode 2: IEEE 802.11a Link Mode	
ANT-3	
5500 MHz	
5560 MHz	
5700 MHz	

Mode 3: IEEE 802.11ac 20MHz Link Mode	
ANT-3	
5260 MHz	
5280 MHz	
5320 MHz	

Mode 3: IEEE 802.11ac 20MHz Link Mode	
ANT-3	
5500 MHz	
5560 MHz	
5700 MHz	

Mode 4: IEEE 802.11ac 40MHz Link Mode	
ANT-3	
5270 MHz	
5310 MHz	
5510 MHz	

Mode 4: IEEE 802.11ac 40MHz Link Mode	
ANT-3	
5550 MHz	
5670 MHz	