Quick Start GUIDE

TORAN'O

50-70-252-000
50-70-254-000

PRESS'O

50-70-244-000
50-70-256-000
50-70-257-000

Pulse SENS'O

50-70-253-000
50-70-255-000

33-70-065-000

1 Recommandations d'usage
Recommendations for use

Installation, maintenance et utilisation:
L'installation, la maintenance et l'utilisation doit être mise en œuvre exclusivement par du personnel ayant les compétences pour l'utilisation de matériel électrique en atmosphère explosible telles que définies dans la norme IEC 60079-14:2013/ISH2:2020 et IEC 60079-17:2013 et conformément au National Electric Code (USA) / Canadian Electric Code (Canada).
Toute réparation ou modification est strictement interdite sans l'autorisation écrite de WATTECO. Risque de décharge électrostatique: L'utilisateur doit mettre en œuvre toute action pour maitriser les risques de décharge électrostatique notamment en nettoyant le produit uniquement avec un chiffon humide.

UTILISER UNIQUEMENT DES PILES SAFT DE TYPE LS17500.
Seule l'utilisation d'accessoires en accord avec les paramètres de sécurité intrinsèque est autorisée (voir les pages 3-4)

Installation, maintenance and usage:
Installation, maintenance and usage must only be carried out by personnel who are competent in the use of electrical equipment in explosive atmospheres as defined in IEC 60079-14:2013/ ISH2:2020 and IEC 60079-17:2013 and in compliance with National Electric Code (USA) / Canadian Electric Code (Canada).
Any repair or modification is strictly prohibited without the written permission of WATTECO.
Risk of electrostatic discharge: The user must implement any action to control the risks of electrostatic discharge, especially by cleaning the product only with a damp cloth.

USE ONLY SAFT TYPE LS17500 BATTERIES.
Only the use of accessories in accordance with the intrinsic safety parameters is permitted (see on pages 3-4)

2 Démarrer
Start

Vue de côté
Side view

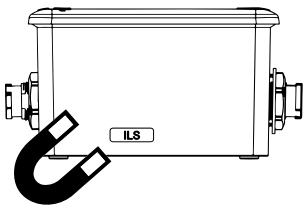

Vue face
Front view

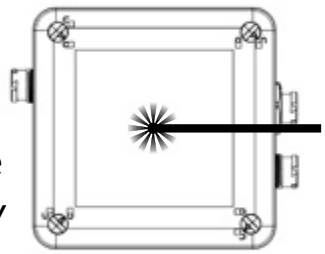

LEDs

Provisionner l'appareil sur votre réseau LoRaWAN® avec les clefs mises à dispositions sur la plateforme sécurisée.

Provision the device on your LoRaWAN® network with the keys available on the secure platform.

ON :

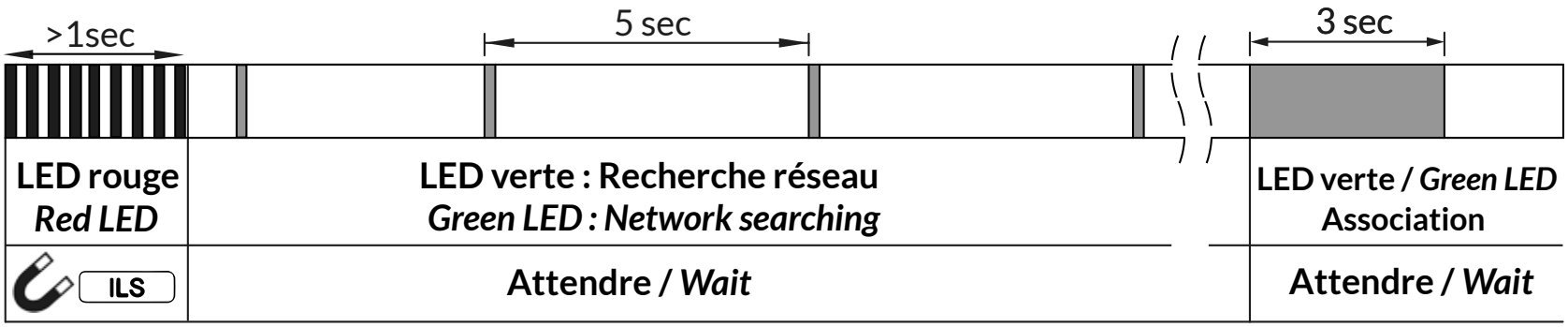

OFF :

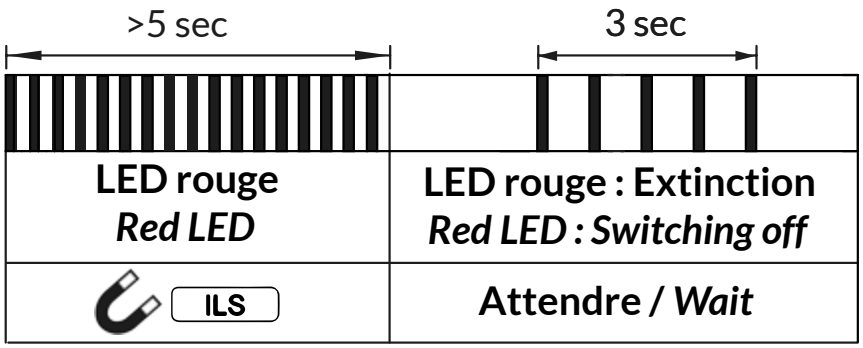

Tutoriels vidéo :

Video tutorials :

https://www.watteco.fr/assistance/tutoriels-video/

3 Connectiques
Connectors

	Connecteur A : 4 points *Connector A: 4 pins*		Connecteur B : Rondelle rouge : 6 points *Connector B: Red circle: 6 pins*		Connecteur C : 6 points *Connector C: 6 pins*	
	Connecteur ***Connector***	**Paramètres SI** ***IS parameters***	**Connecteur** ***Connector***	**Paramètres SI** ***IS parameters***	**Connecteur** ***Connector***	**Paramètres SI** ***IS parameters***
	4-20 mA		0-5 V		Pulse or digital input	
TORAN'O [50-70-252-000] [50-70-254-000] NEMA4x	P1 : OUT – V+ [~14Vdc@20mA] P2 : GND P3 : IN-Measure P4 : NC	Uo = 18,9V Io = 91mA Po = 430 mW Co = 1,6µF [IIB] Co = 262nF [IIC] Lo = 17mH [IIB] Lo = 4mH [IIC]	P1: OUT - V+ [~5,5Vdc@5mA] P2: GND P3: IN-Measure 1 P4: GND P6: IN-Measure 2 P7: GND	Uo = 6,51V Io = 67mA Po = 108 mW Co = 500µF[IIB], Co = 22µF[IIC] Lo = 33mH [IIB], Lo = 8mH [IIC]	P1: INPUT 1 P2: GND P3: INPUT 2 P4 : GND P6: INPUT 3 P7: GND	Uo = 6,33V Io = 33µA Po = 23µW Co = 650µF[IIB], Co = 28µF[IIC] Lo = 1H [IIB], Lo = 1H [IIC] Ui = 25V Ii = 450mA Ci = 3,3nF Li ~ 0
PRESS'O [50-70-244-000] NEMA4x [50-70-256-000] NEMA4x [50-70-257-000]			P1: OUT - V+ [~5,5Vdc@5mA] P2: GND P3: IN-Measure 1 P4: GND P6: IN-Measure 2 P7: GND	Uo = 6,51V Io = 67mA Po = 108 mW Co = 500µF[IIB], Co = 22µF[IIC] Lo = 33mH [IIB], Lo = 8mH [IIC]		
Pulse SENS'O [50-70-253-000] [50-70-255-000] NEMA4x					P1: INPUT 1 P2: GND P3: INPUT 2 P4: GND P6: INPUT 3 P7: GND	Uo = 6,33V Io = 33µA Po = 23µW Co = 650µF[IIB], Co = 28µF[IIC] Lo = 1H [IIB], Lo = 1H [IIC] Ui = 25V Ii = 450mA Ci = 3,3nF Li ~ 0

3 Connectiques
Connectors

A, B, C références aux connecteurs du tableau de la page précédente
A, B, C refers to the connectors in the table on the previous page

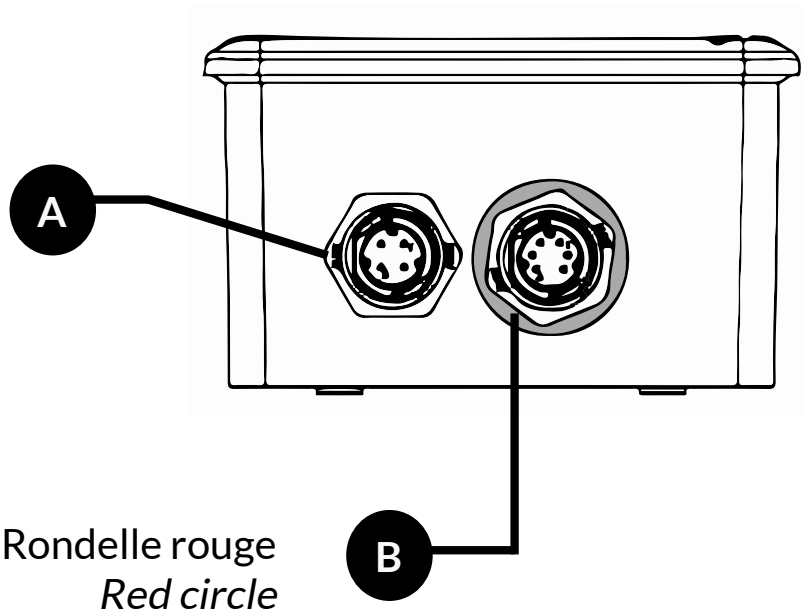

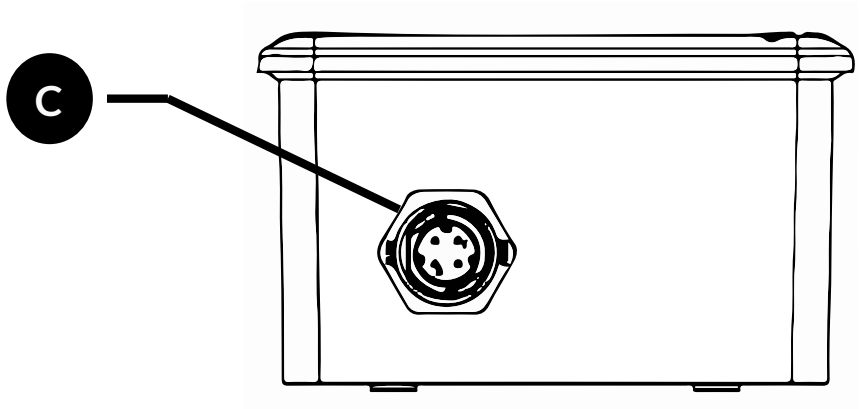

La connectique des embases est définit par :
The connectivity of the subbases is defined by :

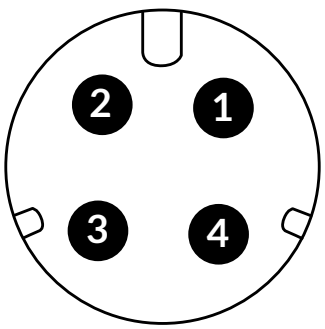

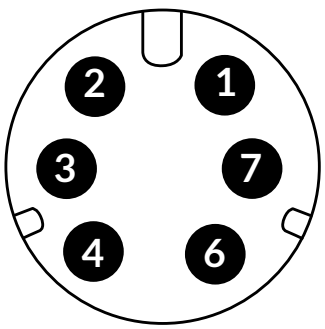

3 Connectiques
Connectors

C connector - Digital inputs
(only for TORAN'O and Pulse SENS'O)

Signal de sortie :
Output Signal:

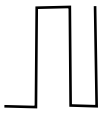

+ - 2V < U < + - 25V

+ - 0V < U < + - 0.8V

F<100Hz

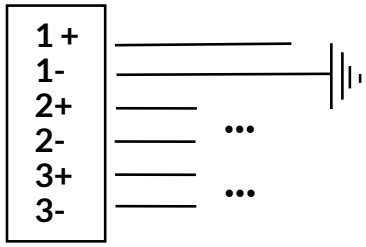

Contact sec :
Dry contact:

F<100Hz

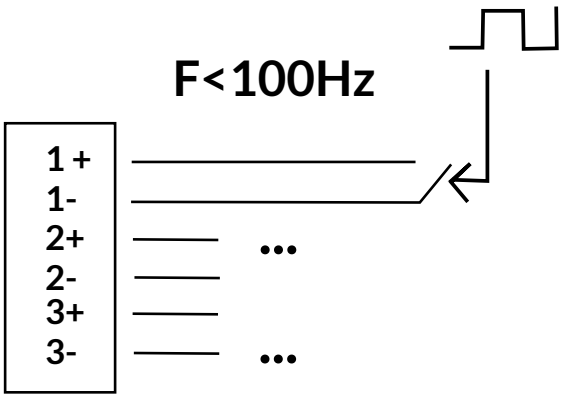

Sortie collecteur ouvert NPN
Open collector output NPN

F<100Hz

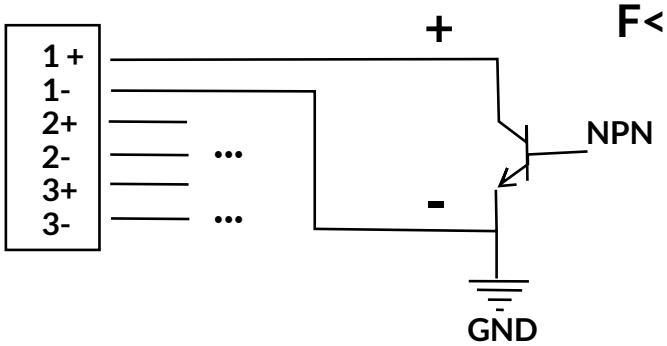

Compatible avec une tension 3V et un courant 3µA.
Compatible with voltage of 3V and a current of 3µA.

NPN Open Collector :
Autres, il faut connecter une alimentation externe compatible AtEx zone 1 avec une résistance pour limiter le courant.
L'exemple ci-dessous est donné avec une alimentation externe de 12V.

NPN Open Collector:
Others, need to connect a compatible AtEx zone 1 external power supply with a resistor to limit the current.
Below exemple is given with an external 12V power supply.

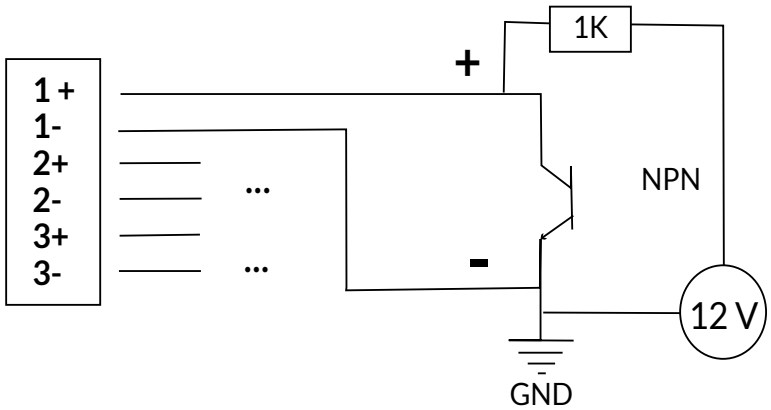

4 Marquage
Marking

Les capteurs TORAN'O/Pulse SENS'O/PRESS'O sont certifiés selon les normes harmonisées IEC / UL / CSA 61010-1 ; IEC / UL / CSA 60079-0 ; IEC / UL / CSA 60079-11 ainsi que UL 50E et UL 121201 / CSA C22.2 No. 213 (N° attestation IECEx QPS 24.0037X).

The TORAN'O/Pulse SENS'O/PRESS'O sensors are certified according to harmonized standards IEC / UL / CSA 61010-1 ; IEC / UL / CSA 60079-0 ; IEC / UL / CSA 60079-11 along with UL 50E and UL 121201 / CSA C22.2 No. 213 (examination certificate number IECEx QPS 24. 0037X*).*

TORAN'O / PRESS'O / Pulse SENS'O

Ex ib IIC T4 Gb IECEx QPS 24.0037X

Class I Division 2, Groups A - D, T4

Class I Zone 1 AEx ib IIC T4 Gb

Enclosure Type 4x

-20°C ≤ Tamb ≤ +50°C

WARNING - DO NOT CHANGE THE BATTERY IN EXPLOSIVE ATMOSPHERE - ONLY USE TYPE OF BATTERY SAFT LS17500 - POTENTIAL ELECTROSTATIC CHARGING HAZARD - INSTRINSIC SAFETY PARAMETERS FOR CONNECTORS - SEE INSTRUCTIONS

ATTENTION - NE PAS REMPLACER LA PILE EN ENVIRONNEMENT EXPLOSIF - N'UTILISER QUE DES PILES DE TYPE SAFT LS17500 - RISQUE POTENTIEL DE DECHARGE ELECTROSTATIQUE - PARAMETRES DE SECURITE INTRINSEQUE POUR LE(S) CONNECTEUR(S)
VOIR LES INSTRUCTIONS

WATTECO - 165 RUE MONTAGNE DU SALUT
56600 LANESTER - FRANCE

4 Marquage *Marking*

This device complies with Part 15 of the FCC Rules.
Operation is subject to the following two conditions:

1. this device may not cause harmful interference.
2. this device must accept any interference received, including interference that may cause undesired operation.

This device has been tested and found to comply with the limits for a Class B digital device, pursuant to part 15 of the FCC Rules. These limits are designed to provide reasonable protection against harmful interference in a residential installation. This equipment generates, uses and can radiate radio frequency energy and, if not installed and used in accordance with the instructions, may cause harmful interference to radio communications. However, there is no guarantee that interference will not occur in a particular installation. If this equipment does cause harmful interference to radio or television reception, which can be determined by turning the equipment off and on, the user is encouraged to try to correct the interference by one or more of the following measures:

- Reorient or relocate the receiving antenna.
- Increase the separation between the equipment and receiver.
- Connect the equipment into an outlet on a circuit different from that to which the receiver is connected.
- Consult the dealer or an experienced radio/TV technician for help.

This device complies with the FCC RF exposure limits and has been evaluated in compliance with mobile exposure conditions.
The equipment must be installed and operated with minimum distance of 20 cm of the human body.
Caution: Changes or modifications not expressly approved by the party responsible for FCC compliance could void the user authority to operate the device. (Cf. FCC Part 15.21).

This device complies with Industry Canada license-exempt RSS standard(s).
Operation is subject to the following two conditions:

1. this device may not cause interference.
2. this device must accept any interference, including interference that may cause undesired operation of the device.

This device complies with ISED RF exposure limits and has been evaluated in compliance with mobile exposure conditions.
The equipment must be installed and operated with minimum distance of 20 cm of the human body.
This Class B digital apparatus complies with Canadian ICES-003

Le présent appareil est conforme aux CNR d'Industrie Canada applicables aux appareils radio exempts de licence.
L'exploitation est autorisée aux deux conditions suivantes :

1. L'appareil ne doit pas produire de brouillage
2. L'utilisateur de l'appareil doit accepter tout brouillage radioélectrique subi, même si le brouillage est susceptible d'en compromettre le fonctionnement.

Cet appareil est conforme aux limites d'exposition RF d'ISDE et a été évalué conformément aux conditions d'exposition mobile. L'équipement doit être installé et utilisé à une distance minimale de 20 cm du corps humain.
Cet appareil numérique de classe B est conforme à la norme canadienne NMB-003.

4 Marquage *Marking*

Supplier's Declaration of Conformity
47 CFR § 2.1077 Compliance Information

This device complies with part 15 of the FCC Rules. Operation is subject to the following two conditions: (1) This device may not cause harmful interference, and (2) this device must accept any interference received, including interference that may cause undesired operation.
We,

WATTECO
Pôle de Technellys, Bâtiment H, Boite aux lettres N°60
165 rue de la Montagne du Salut
56 600 LANESTER - FRANCE
www.watteco.com

hereby declare that the equipment bearing the model name specified below was tested conforming to the applicable FCC Rules and Regulations Title 47 Part 15 under the most accurate measurement standards possible, and that all the necessary steps have been taken and are in force to assure that production units of the same equipment will continue to comply with the Commissions requirements.

Unique Identifier:

Type of product: LoRaWAN transceiver
Brand name: Toran'O / Press'O / Pulse Sens'O
Model name: Toran'O Product line
FCC ID: 2AGTV-50-70-244
IC: 32028-5070244

5 Installation
Setting up

Ouverture / Fermeture
Opening / Closure

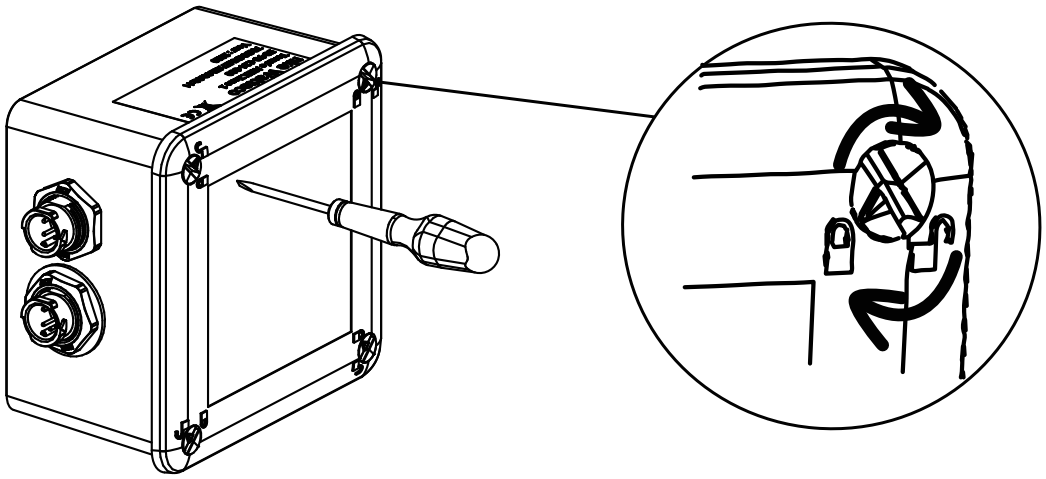

Dévissez les 4 vis un ¼ de tour
Unscrew the 4 screws by ¼ turn

Montage mural
Wall mounting

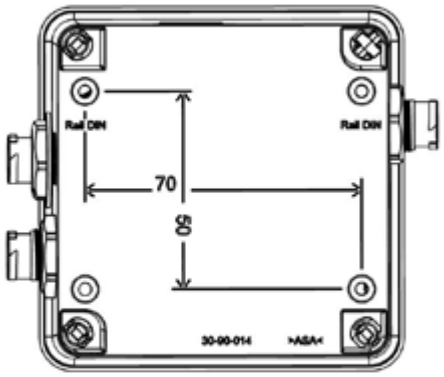

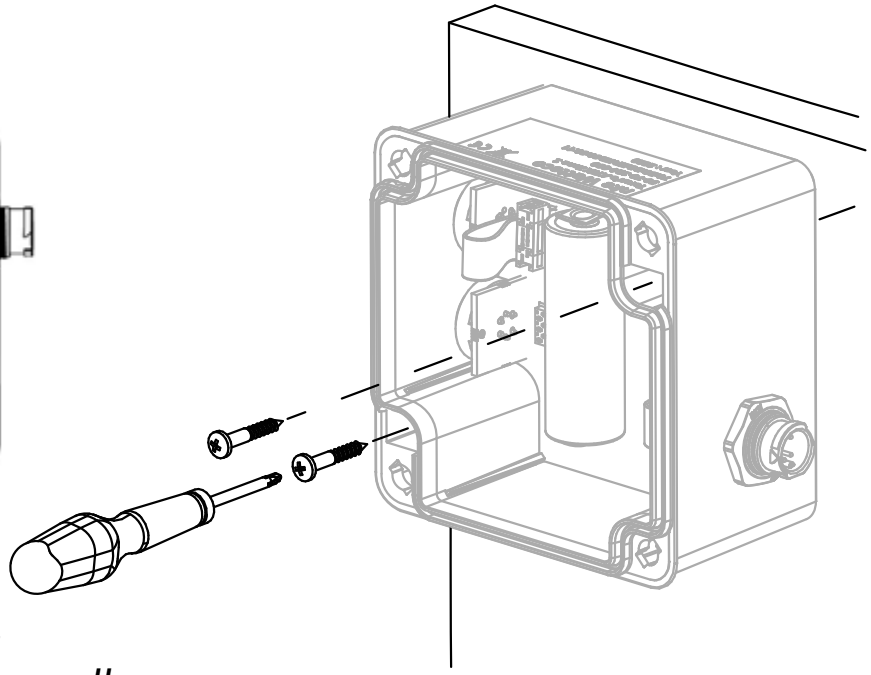

Placer les chevilles et visser le boîtier au mur
Place the dowels and screw the housing to the wall

6 Caractéristiques *Characteritics*

	TORAN'O		PRESS'O		Pulse SENS'O	
Référence / *Reference*	**50-70-252-000**	**50-70-254-000**	**50-70-257-000**	**50-70-244-000** **50-70-256-000**	**50-70-253-000**	**50-70-255-000**
Tx operating frequencies range	from 902.3MHz to 915.9MHz (125kHz channels)		from 902.3MHz to 915.9MHz (125kHz channels)		from 902.3MHz to 915.9MHz (125kHz channels)	
Rx operating frequencies range	from 923.3MHz to 927.5MHz (500kHz channels)		from 923.3MHz to 927.5MHz (500kHz channels)		from 923.3MHz to 927.5MHz (500kHz channels)	
Classe / *Class*	A		A		A	
Niveau de puissance / *Power Level*	+14 dBm		+14 dBm		+14 dBm	
Mesures / *Measures :*	Pulse counting or digital inputs 4 - 20 mA 0 - 5 V		0 - 5 V		Pulse counting or digital inputs	
Antenne / *Antenna*	Interne *Internal*		Interne *Internal*		Interne *Internal*	
Matériaux du boîtier / *Casing materials*	ASA / PC		ASA / PC		ASA / PC	
Indice de protection / *IP rating*	-	NEMA4x	-	NEMA4x	-	NEMA4x
Température de fonctionnement *Operating temperature*	-20°C - +50°C					
Taux d'humidité de fonctionnement *Operating humidity range*	0% - 95%					
Altitude maximum de fonctionnement *Maximum operating altitude*	2000 m					

TECHNICAL SUPPORT

CERTIFICATIONS

WATTECO

IoT devices manufacturer