More Information, Please visit www.sunmi.com
Hotline：(0086)-400-902-1168

D1

User Manual Book

(W3500)

This Manual Book shall be read carefully before use and remained in safe hands.

Quick Installation Guide

1. Rotate the display to a horizontal state

2. Open the line hide cover

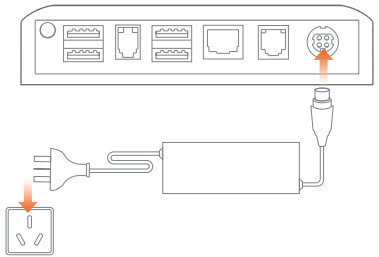

3. Connect the power interface of the adapter to the power port at the bottom of the mainframe. And insert the other side of the adapter to electric supply sockets

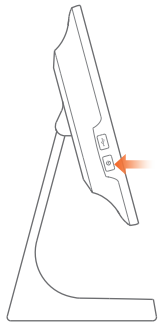

4. Press the power button for two seconds to turn on.

Minimal Settings

Only a few steps to turn on the intelligent business equipment.

1. Press the power button and the screen lights on. Enter the first start-up screen and operate according to the prompt. Two modes of Internet access are available.
2. Wi-Fi setting.
   - Press [Setting] and start WLAN. Enter the searching interface of WLAN, waiting for WLAN network available;
   - Click on the WLAN to be connected. A password is required for access if an encrypted network is chosen.
3. Setting of LAN

How to download/use the application

This POS machine is suitable for cashier environment of business customers of different industries including Chinese and Western foodservice industry, exclusive department store, convenience store, the banking service industry, consulting station, interactive multimedia and advertisement broadcast system, etc. Relevant apps can be scanned, downloaded and installed in the application store with access to the internet.

Please read the built-in Help APP for more help.

Product Introduction

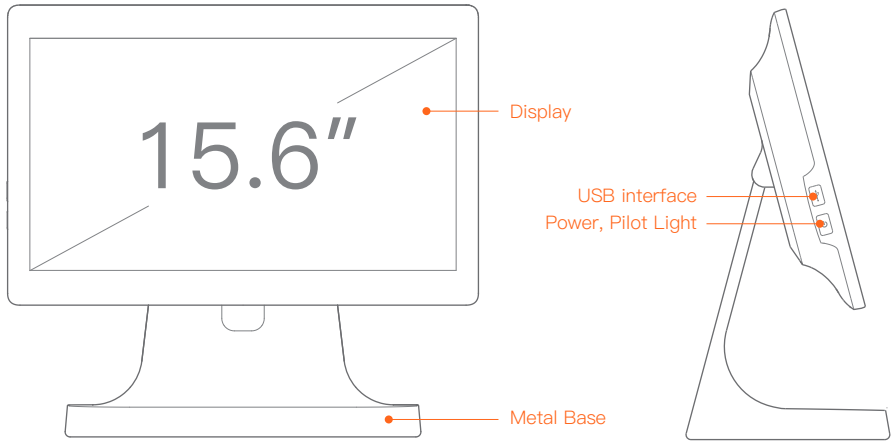

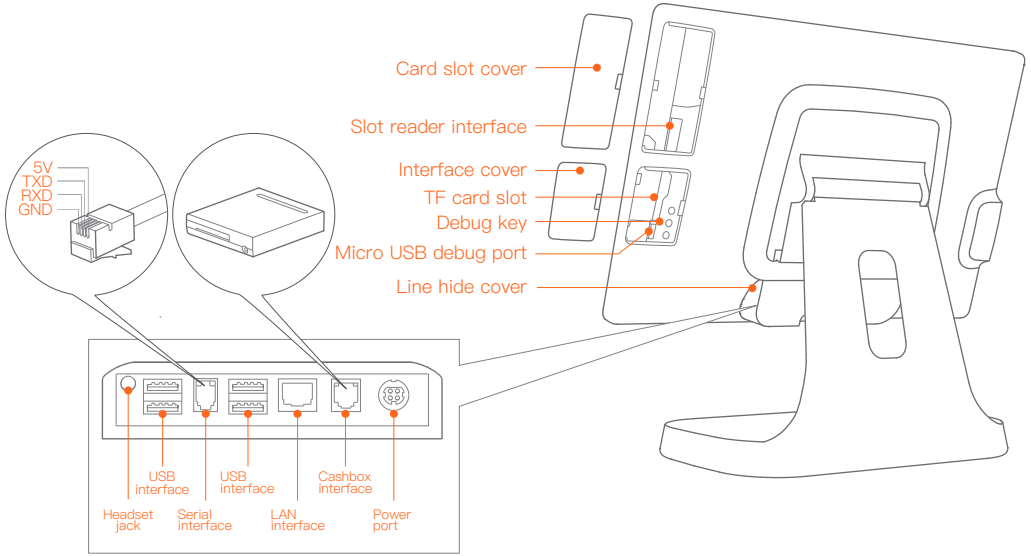

Power

In the state of power off, a short press turns on the computer.

In the state of normal use, press on the power button for two or three seconds to choose power off or restart.

In the state of system halted, press on the power button for 11 seconds for power off.

Pilot Light

Blue light on when the power is on.
Light off when the power is off.

USB Interface

For external keyboard, mouse and USB drive.

Display

For the touch screen used by the operator.

Metal Base

For supporting the display when put on the desktop.

Able to be replaced with the VESA suspension bracket.

Slot reader interface

For external MSR/RFID POS

Card slot is an optional part which may not becontained according to configuration.

TF card slot

For external TF card.

Micro USB debug port, debug key

For facilitydebugging.

Cashbox Interface

For external cashbox with 120ms electric pulse output. No continuous power supply.
This facility only supports 24V/1A cashbox. There may exist hidden troubles that will burn the circuit of the cashbox in case of 12V cashbox.

Installation Steps for the VESA Bracket

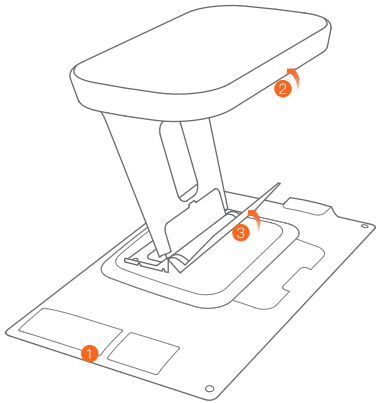

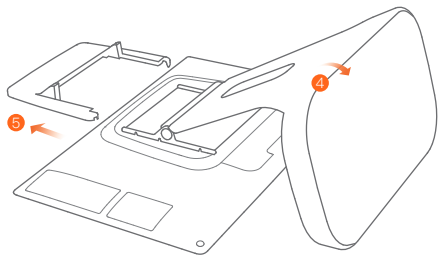

Remove the base

1. Put the display flat on the desktop with its face down.
2. Rotate the metal base to a vertical state.
3. Remove the lower cover of the bracket.

Remove the base

4. Rotate the metal base to a horizonal state.
5. Remove the upper cover of the bracket.

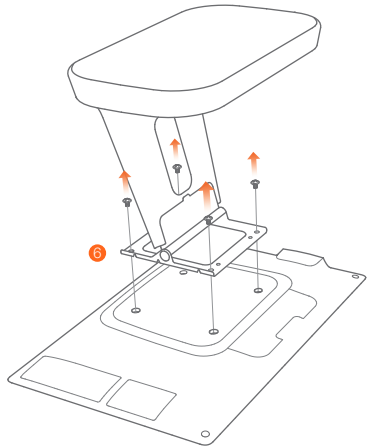

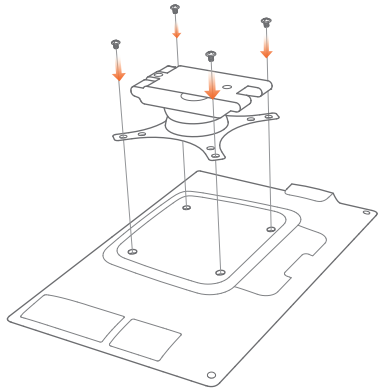

Remove the base

6. Unscrew the four M4 screws with a screwdriver and complete the removal of base.

Install VESA accessories

1. Put the VESA bracket aligning to four screw holes according to required direction.
2. Use the four M4 screws removed from the base to fix the VESA bracket.
3. Install the bracket on the wall or desk in accordance with VESA bracket manual book and complete the installation of VESA suspension bracket.

Note: This machine only supports the installation for VESA MIS-D (100×100mm) suspension bracket. The VESA bracket is an optional accessory which needs to be purchased by the user.

Basic Parameters for POS Machine

Operating system	Android 6.0
Processor	Qualcomm snapdragon 8-core processor
Display resolution	15.6'' resolution HD 1366 x 768
Storage	8GB ROM + 1GB RAM
Touch screen	Multi-touch capacitive display
Wi-Fi	Support 802.11b/g/n 2.4GHz
Bluetooth	Support Bluetooth 3.0/4.0 and iBeacon
Loudspeaker	Single 1.2W voice reaches 90db
External interface	5x USB Type A interfaces, 1x RJ11 serial interface, 1x RJ12 24V cashbox interface, 1x RJ45 LAN interface, 1x headset jack, 1x power port, 1x Micro-USB debug interface
External storage card	MicroSD (TF), 64G maximum
VESA	In accordance with VESA MIS-D 100×100mm Standard
Item dimension	L 35cm × W 38cm × T 17cm
AC adapter	Model No.:ADS-65HI-19A-1 24036E Input:AC 100~240V,50/60Hz,1.2A Output:DC 24V,1.5A Manufacturer:Shenzhen HONOR Electronic Co., Ltd. Address:Room 1603, Chuangzhan Center, No. 6007, Shennan Road, Futian, Shenzhen, Guangdong, P.R. China

Configurations and parameters listed in this page are indicative and actual products on the market shall prevail.

Name and Content of Toxic or Harmful Substances in this Product

Part Name	Toxic or Harmful Substances or Elements					
	Lead (Pb)	Mercury (Hg)	Cadmium (Cd)	Hexavalent chromium (Cr(VII)	Polybrominated biphenyls (PBB)	Polybrominated diphenyl ethers (PBDE)
Components of circuit board	×	○	○	○	○	○
Print head component	×	○	○	○	○	○

○ : Means that the content of the toxic or harmful substance in all homogeneous materials of this part is below the limit stipulated in SJ/T11363-2006.

× : Means that the content of the toxic or harmful substance in at least one of the homogeneous materials of this part is beyond the limit stipulated in SJ/T11363-2006; but as for the component marked with "×" on the table, the content is beyond the l imit since there is no alternative mature technology in the industry yet.

The products reaching or exceeding the environmental service life shall be recycled per "Regulations on the Control and Management of Electronic Information Products" and shall not be littered.

Package content

☑ D1 ☑ Instruction Manual

Precautions

Warning

- Please insert the AC plug into the AC outlet according to the identifying input on the power adapter;
- It is prohibited to use the device in any places with potential explosive gases;
- Nonprofessionals shall not open the power adapter anyhow so as to avoid dangers;
- The device is a Grade A product. In living environment, the product may cause radio interference. Therefore, users may be required to take practical measures against the interference.
- About the battery replacement:
  1. It may cause explosion with wrong type battery
  2. Old battery which is replaced should be handled by repair man, do not put it in fire!
- Adapter shall be installed near the equipment and shall be easily accessible.
- The operating temperature of the device between 0℃ to 45℃.
- The device complies with RF specifications when the device used at 20cm form your body.
- This product can be used across EU member states.

Recommendation

- Do not use the device near water or in humid environment.Keep liquid from falling onto the terminal;
- Do not use the device in extremely cold and hot environment, e.g. around fire or lighted cigarettes;
- Do not smash, throw or bend the device;
- Use the device in clean and dustfree environment as much as possible and keep small items from falling into the terminal;
- Do not use it near medical devices unless permitted.

Important Safety Instructions

- Avoid installing or using during thunder and lightning,other wise lightning stroke may occur;
- Cut off the power immediately if there is abnormal smell, overheating or smog;
- Do not touch the sharp paper cutting tool!

Statement

The company is not responsible for the following behaviors:

- Damages caused by using and maintaiing the device without following the User Guide;
- Damages or problems caused by selection of objects or Consumables (products which are not the initial ones provided or recognized by the company).
  In this case, the company will not undertake any responsibility. No one is entitled to modify or change the product unless permitted by the company.

Disclaimer

Discrepancies between the product and the file concerning details may raise due to product updates. Please be subject to the material object. The company reserves the right to interpret the file and the right to revise this manual without prior notices.

Please make sure the temperature for adapter will be from –10 ℃ to 40 ℃.

Please make sure the temperature for device will be from –10 ℃ to 40 ℃.

EU Regulatory Conformance

Hereby, Shanghai Sunmi Technology Co., Ltd. declares that the radio equipment type is in compliance with Directive 2014/53/EU.

The full text of the EU declaration of conformity is available at the following internet address: www.sunmi.com

Notice: Observe the national local regulations in the location where the device is to beused. This device may be restricted for use in some or all member states of the European Union (EU).
Adapter shall be installed near the equipment and shall be easily accessible.
The operating temperature of the device between 0℃ to 45℃.
The device complies with RF specifications when the device used at 20cm form your body
This product can be used across EU member states.

FCC Regulations:

This device complies with part 15 of the FCC Rules. Operation is subject to the following two conditions:
(1) This device may not cause harmful interference, and (2) this device must accept any interference received, including
interference that may cause undesired operation.
This device has been tested and found to comply with the limits for a Class B digital device, pursuant to Part 15 of the FCC Rules. These limits are designed to provide reasonable protection against harmful interference in a residen–tial installation. This equipment generates, uses and can radiated radio frequency energy and, if not installed and used in accordance with the instructions, may cause harmful interference to radio communications. However, there is no guarantee that interference will not occur in a particular installation If this equipment does cause harmful interference to radio or television reception, which can be determined by turning the equipment off and on, the user is encouraged to try to correct theinterference by one or more of the following measures:

- Reorient or relocate the receiving antenna.
- Increase the separation between the equipment and receiver.
- Connect the equipment into an outlet on a circuit different from that to which the receiver is connected.
- Consult the dealer or an experienced radio/TV technician for help.

Caution: Changes or modifications not expressly approved by the party responsible for compliance could void the user's authority to operate the equipment.

Technical features and characteristic

the product includes the following features and characteristics：

WIFI	
Operation Frequency	2412MHz~2472MHz 802.11b/802.11g/802.11n(H20)
	2422MHz~2462MHz 802.11n(H40)
Maximum Power(2.4GHz)	16.40dBm(E.I.R.P.)
BT	
Operation Frequency	2402~2480MHz
Maximum Power(BT3.0+EDR:)	8.80dBm(E.I.R..)
Maximum Power(BT4.0:):	-2.85dBm(E.I.R.P.)
GSM	
Operation Frequency:	E-GSM 900: 880~915MHz DCS 1800: 1710~1785MHz
Maximum Power (E-GSM 900)	E-GSM 900:32.59dBm
Maximum Power (DCS 1800)	29.84dBm
WCDMA	
Operation Frequency:	Band 1 TX:1920MHz~1980MHz,RX:2110MHz~2170MHz
Maximum Power (WCDMA Band 1)	22.09dBm

Note： D1 North America edition is limited using channel 1-11. This limited operation can be only set by software and was done before the product down from the product line. All the products for North America marketing were embedded this limited before shipping.

Customers have no way to choose the channel 12 & 13.

Limited by local law regulations, version for North America does not have region selection option.