RF TEST REPORT

Applicant	Shanghai Sunmi Technology Co.,Ltd.
FCC ID	2AH25D3N
Product	POS System
Brand	SUNMI
Model	F153C; F153B
Report No.	EFTA25070076-IE-10-R12V1
Issue Date	January 7, 2026

Eurofins TA Technology (Shanghai) Co., Ltd. tested the above equipment in accordance with the requirements in **FCC CFR47 Part 15C (2025)**. The test results show that the equipment tested is capable of demonstrating compliance with the requirements as documented in this report.

Prepared by: Xu Ying *Approved by: Xu Kai*

Eurofins TA Technology (Shanghai) Co., Ltd.

Building 3, No.145, Jintang Rd, Pudong Shanghai, P.R.China
TEL: +86-021-50791141/2/3
FAX: +86-021-50791141/2/3-8000

TABLE OF CONTENT

1 Test Laboratory 6
1.1 Notes of the Test Report 6
1.2. Test facility 6
1.3 Testing Location 6
2 General Description of Equipment under Test 7
2.1 Applicant and Manufacturer Information 7
2.2 General information 7
3 Applied Standards 8
4 Information about the FHSS characteristics 9
4.1 Frequency Hopping System Requirement 9
4.2 Pseudorandom Frequency Hopping Sequence 10
4.3 Equal Hopping Frequency Use 11
4.4 System Receiver Input Bandwidth 11
4.5 Test Configuration 12
5 Test Case 13
5.1 Unwanted Emission 13
5.2 Conducted Emission 19
6 Test Results 20
6.1 Unwanted Emission 20
6.2 Conducted Emission 21
7 Main Test Instruments 22
8 The EUT Appearance 23
9 Test Setup Photos 24
10 Product Change Description 25

This report shall not be reproduced except in full, without the written approval of Eurofins TA Technology (Shanghai) Co., Ltd.

Version	Revision Description	Issue Date
Rev.0	Initial issue of report.	December 22, 2025
Rev.1	Updated data.	January 7, 2026
Note: This revised report (Report No.: EFTA25070076-IE-10-R12V1) supersedes and replaces the previously issued report (Report No.: EFTA25070076-IE-10-R12). Please discard or destroy the previously issued report and dispose of it accordingly.		

This report shall not be reproduced except in full, without the written approval of Eurofins TA Technology (Shanghai) Co., Ltd.

Summary of Measurement Results

Number	Test Case	Clause in FCC rules	Verdict
1	Unwanted Emissions	15.247(d),15.205,15.209	PASS
2	Conducted Emissions	15.207	PASS
Date of Testing: December 12, 2025 ~ December 19, 2025 Date of Sample Received: September 1,2025			
Note: PASS: The EUT complies with the essential requirements in the standard. FAIL: The EUT does not comply with the essential requirements in the standard. All indications of Pass/Fail in this report are opinions expressed by Eurofins TA Technology (Shanghai) Co., Ltd. based on interpretations and/or observations of test results. Measurement Uncertainties were not taken into account and are published for informational purposes only.			

This report shall not be reproduced except in full, without the written approval of Eurofins TA Technology (Shanghai) Co., Ltd.

F153C; F153B (Report No.: EFTA25070076-IE-10-R12V1) is a variant model of F154B (Report No.:EFTA25070076-E-02-R6V1).

The differences between variant and original is as below:

Description	Front Camera	Screen	Secondary screen NFC	Printer	BT/WIFI Antenna	NFC Antenna	LCD	Adapter
F153C	N	D3 Dual large screens	Y	N	Same 2.4G：4.01dBi 5G：4.99dBi 		15.6 " FHD+15.6 " FHD	36W
F153B	N	D3 Large and small screens	Y	N	Same 2.4G：4.01dBi 5G：4.99dBi 	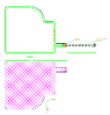	15.6 " FHD+10.1 HD	36W
F154B	N	D3 80 mm Large and small screens	Y	Y	Same 2.4G：3.49dBi 5G：4.67dBi 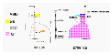		15.6 " FHD+10.1 HD	60W

The detailed product change description please refers to the *Difference Declaration Letter*.

Tested Cases refer to the following table:

Test Case	Original (F154B)	Variant (F153C)
Unwanted Emissions	Pass	New Test
Conducted Emissions	Pass	New Test

This report shall not be reproduced except in full, without the written approval of Eurofins TA Technology (Shanghai) Co., Ltd.

1 Test Laboratory

1.1 Notes of the Test Report

This report shall not be reproduced in full or partial, without the written approval of **Eurofins TA Technology (Shanghai) Co., Ltd.** The results documented in this report apply only to the tested sample, under the conditions and modes of operation as described herein. Measurement Uncertainties were not taken into account and are published for informational purposes only. This report is written to support regulatory compliance of the applicable standards stated above.

1.2. Test facility

FCC (Designation number: CN1179, Test Firm Registration Number: 446626)

Eurofins TA Technology (Shanghai) Co., Ltd. has been listed on the US Federal Communications Commission list of test facilities recognized to perform measurements.

A2LA (Certificate Number: 3857.01)

Eurofins TA Technology (Shanghai) Co., Ltd. has been listed by American Association for Laboratory Accreditation to perform measurement.

1.3 Testing Location

Company:	Eurofins TA Technology (Shanghai) Co., Ltd.
Address:	Building 3, No.145, Jintang Rd, Pudong Shanghai, P.R.China
City:	Shanghai
Post code:	201201
Country:	P. R. China
Contact:	Xu Kai
Telephone:	+86-021-50791141/2/3
Fax:	+86-021-50791141/2/3-8000
Website:	https://www.eurofins.com/electrical-and-electronics
E-mail:	Kain.Xu@cpt.eurofinscn.com

This report shall not be reproduced except in full, without the written approval of Eurofins TA Technology (Shanghai) Co., Ltd.

2 General Description of Equipment under Test

2.1 Applicant and Manufacturer Information

Applicant	Shanghai Sunmi Technology Co.,Ltd.
Applicant address	Room 505,No.388,Song Hu Road, Yang Pu District, Shanghai, China
Manufacturer	Shanghai Sunmi Technology Co.,Ltd.
Manufacturer address	Room 505,No.388,Song Hu Road, Yang Pu District, Shanghai, China

2.2 General information

EUT Description			
Model	F153C; F153B		
Lab internal SN	F153B: 250707-20-036 F153C: 250707-20-072		
Hardware Version	D3_MB_V1.1		
Software Version	V1.0		
Power Supply	AC adapter		
Antenna Type	PIFA Antenna		
Antenna Connector	A permanently attached antenna (meet with the standard FCC Part 15.203 requirement)		
Antenna Gain	4.01 dBi		
Test Mode(s)	Basic Rate	Enhanced Data Rate(EDR)	
Modulation Type	Frequency Hopping Spread Spectrum (FHSS)		
	GFSK	π/4 DQPSK	8DPSK
Packet Type (Maximum Payload)	DH5	2DH5	3DH5
Operating Frequency Range(s)	2402-2480 MHz		
Operating voltage range	21.6 Vdc to 26.4 Vdc		
State voltage	24 Vdc		
EUT Accessory			
Adapter	Manufacturer: Jiangsu Chenyang Electron Co., Ltd. Model: CYZS36-240150		
Note: 1. The EUT is sent from the applicant to Eurofins TA and the information of the EUT is declared by the applicant.			

This report shall not be reproduced except in full, without the written approval of Eurofins TA Technology (Shanghai) Co., Ltd.

3 Applied Standards

According to the specifications of the manufacturer, it must comply with the requirements of the following standards:

Test standards:

FCC CFR47 Part 15C (2025) Radio Frequency Devices

ANSI C63.10-2020

Reference standard:

KDB 558074 D01 15.247 Meas Guidance v05r02

This report shall not be reproduced except in full, without the written approval of Eurofins TA Technology (Shanghai) Co., Ltd.

4 Information about the FHSS characteristics

4.1 Frequency Hopping System Requirement

Standard requirement:
(g) Frequency hopping spread spectrum systems are not required to employ all available hopping channels during each transmission. However, the system, consisting of both the transmitter and the receiver, must be designed to comply with all of the regulations in this section should the transmitter be presented with a continuous data (or information) stream. In addition, a system employing short transmission bursts must comply with the definition of a frequency hopping system and must distribute its transmissions over the minimum number of hopping channels specified in this section.
(h) The incorporation of intelligence within a frequency hopping spread spectrum system that permits the system to recognize other users within the spectrum band so that it individually and independently chooses and adapts its hop sets to avoid hopping on occupied channels is permitted. The coordination of frequency hopping systems in any other manner for the express purpose of avoiding the simultaneous occupancy of individual hopping frequencies by multiple transmitters is not permitted.
Compliance for section 15.247(g):
According to Bluetooth Core Specification, the Bluetooth system transmits the packets with the pseudorandom hopping frequency with a continuous data and short burst transmission from the Bluetooth system is also transmitted under the frequency hopping system with the pseudorandom hopping frequency system.
Compliance for section 15.247(h):
According to Bluetooth Core Specification, the Bluetooth system incorporates with an adaptive system to detect other user within the spectrum band so that it individually and independently to avoid hopping on the occupied channels.
According to Bluetooth Core Specification, the Bluetooth system is designed not have the ability to coordinate with other FHSS System in an effort to avoid the simultaneous occupancy of individual hopping frequencies by multiple transmitter.

This report shall not be reproduced except in full, without the written approval of Eurofins TA Technology (Shanghai) Co., Ltd.

4.2 Pseudorandom Frequency Hopping Sequence

Frequency Hopping Systems. A spread spectrum system in which the carrier is modulated with the coded information in a conventional manner causing a conventional spreading of the RF energy about the frequency carrier. The frequency of the carrier is not fixed but changes at fixed intervals under the direction of a coded sequence. The wide RF bandwidth needed by such a system is not required by spreading of the RF energy about the carrier but rather to accommodate the range of frequencies to which the carrier frequency can hop. The test of a frequency hopping system is that the near term distribution of hops appears random, the long term distribution appears evenly distributed over the hop set, and sequential hops are randomly distributed in both direction and magnitude of change in the hop set.

Adaptive Frequency Hopping (AFH) was introduced in the Bluetooth specification to provide an effective way for a Bluetooth radio to counteract normal interference. AFH identifies "bad" channels, where either other wireless devices are interfering with the Bluetooth signal or the Bluetooth signal is interfering with another device. The AFH-enabled Bluetooth device will then communicate with other devices within its pioneer to share details of any identified bad channels. The devices will then switch to alternative available "good" channels, away from the areas of interference, thus having no impact on the bandwidth used.

The selection scheme chooses a segment of 32 hop frequencies spanning about 64 MHz and visits these hops in a pseudo-random order. Next, a different 32-hop segment is chosen, etc. In the page, master page response, slave page response, page scan, inquiry, inquiry response and inquiry scan hopping sequences, the same 32-hop segment is used all the time (the segment is selected by the address; different devices will have different paging segments).

When the basic channel hopping sequence is selected, the output constitutes a pseudo-random sequence that slides through the 79 hops. The principle is depicted in the figure below.

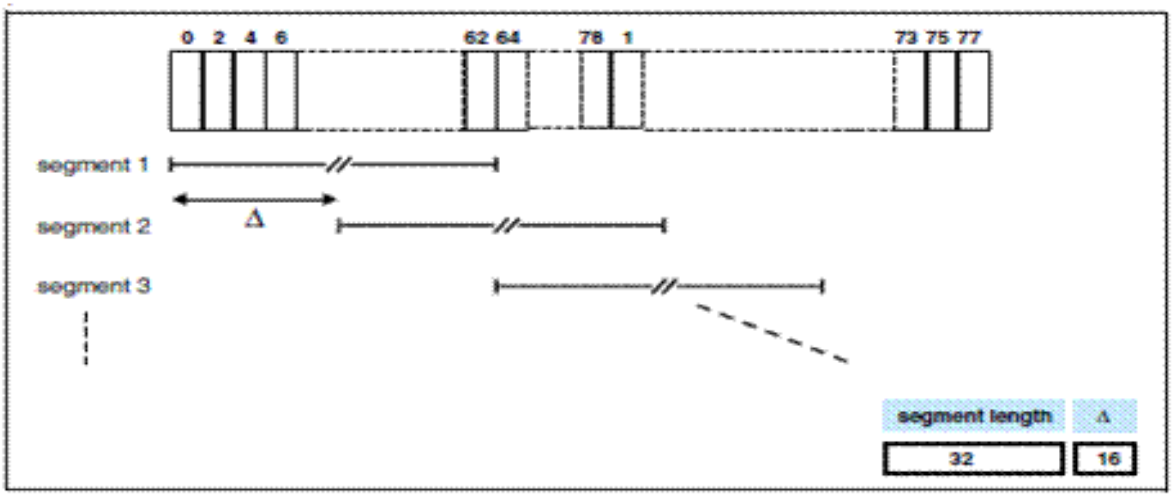

Hop selection scheme in CONNECTION state.

Pseudorandom Frequency Hopping Sequence Table as below:

Channel: 08, 24, 40, 56, 40, 56, 72, 09, 01, 09, 33, 41, 33, 41, 65, 73, 53, 69, 06, 22, 04, 20, 36, 52, 38, 46, 70, 78, 68, 76, 21, 29, 10, 26, 42, 58, 44, 60, 76, 13, 03, 11, 35, 43, 37, 45, 69, 77, 55, 71, 08, 24, 08, 24, 40, 56, 40, 48, 72, 01, 72, 01, 25, 33, 12, 28, 44, 60, 42, 58, 74, 11, 05, 13, 37, 45, etc.

Each frequency used equally on the average by each transmitter.

This report shall not be reproduced except in full, without the written approval of Eurofins TA Technology (Shanghai) Co., Ltd.

The system receiver have input bandwidths that match the hopping channel bandwidths of their corresponding transmitters and shift frequencies in synchronization with the transmitted signals.

4.3 Equal Hopping Frequency Use

All Bluetooth units participating in the Pico net are time and hop-synchronized to the channel. Each new transmission event begins on the next channel in the hopping sequence after the final channel used in the previous transmission event.

4.4 System Receiver Input Bandwidth

Each channel bandwidth is 1MHz. The system receivers have input bandwidths that match the hopping channel bandwidths of their corresponding transmitters and shift frequencies in synchronization with the transmitted signals.

This report shall not be reproduced except in full, without the written approval of Eurofins TA Technology (Shanghai) Co., Ltd.

4.5 Test Configuration

The EUT has been associated with peripherals and configuration operated in a manner tended to maximize its emission characteristics in a typical application.

Test Cases	Test Modes
Peak Power Output -Conducted	DH5/2DH5/3DH5
Occupied Bandwidth (20dB)	DH5/2DH5/3DH5
Frequency Separation	DH5/2DH5/3DH5
Time of Occupancy (Dwell Time)	DH5/2DH5/3DH5
Band Edge Compliance	DH5/2DH5/3DH5
Number of Hopping Frequency	DH5/2DH5/3DH5
Spurious RF Conducted Emissions	DH5/2DH5/3DH5
Unwanted Emission	DH5/2DH5/3DH5
Conducted Emission	DH5/2DH5/3DH5

This report shall not be reproduced except in full, without the written approval of Eurofins TA Technology (Shanghai) Co., Ltd.

5 Test Case

5.1 Unwanted Emission

Ambient condition

Temperature	Relative humidity	Pressure
15°C ~ 35°C	20% ~ 80%	86 kPa ~ 106 kPa

Method of Measurement

The test set-up was made in accordance to the general provisions of ANSI C63.10. The Equipment Under Test (EUT) was set up on a non-conductive table in the semi-anechoic chamber. The test was performed at the distance of 3 m/10m below 1GHz, 3m above 1GHz between the EUT and the receiving antenna. The radiated emissions measurements were made in a typical installation configuration.
Sweep the whole frequency band through the range from 9 kHz to the 10th harmonic of the carrier, and the emissions less than 20 dB below the permissible value are reported.
During the test, below 30MHz, the center of the loop shall be 1 meters; above 30MHz, the height of receive antenna shall be moved from 1 to 4 meters, and the antenna shall be performed under horizontal and vertical polarization. The turntable shall be rotated from 0 to 360 degrees for detecting the maximum of radiated spurious signal level. The measurements shall be repeated with orthogonal polarization of the test antenna. The data of cable loss and antenna factor has been calibrated in full testing frequency range before the testing.
Set the spectrum analyzer in the following:
9kHz~150 kHz
RBW=200Hz, VBW=1kHz/ Sweep=AUTO
150 kHz~30MHz
RBW=9kHz, VBW=30kHz,/ Sweep=AUTO
Below 1GHz
RBW=100kHz / VBW=300kHz / Sweep=AUTO
Above 1GHz
(a) PEAK: RBW=1MHz VBW=3MHz/ Sweep=AUTO
(b) AVERAGE: RBW=1MHz / VBW=3MHz / Sweep=AUTO
detector; The measurements employing a CISPR quasi-peak detector except for the frequency bands 9-90 kHz, 110-490 kHz and above 1000 MHz. Radiated emission limits in these three bands are based on measurements employing an average detector.
The dwell time per channel of the hopping signal is less than 100 ms, then the reading obtained with the 10 Hz VBW may be further adjusted by a “duty cycle correction factor”, derived from 20log(dwell time/100 ms), in an effort to demonstrate compliance with the 15.209 limit.
If the emission is pulsed, modify the unit for continuous operation; use the settings shown above, then correct the reading by subtracting the peak- average correction factor, derived form the appropriate duty cycle calculation.

This report shall not be reproduced except in full, without the written approval of Eurofins TA Technology (Shanghai) Co., Ltd.

This setting method can refer to **KDB 558074 D01.**

This mode was measured in the following mode: EUT with cradle and EUT without cradle. The worst emission was found in EUT with cradle mode and the worst case was recorded.

The test is in transmitting mode.

Test setup

9kHz~ 30MHz

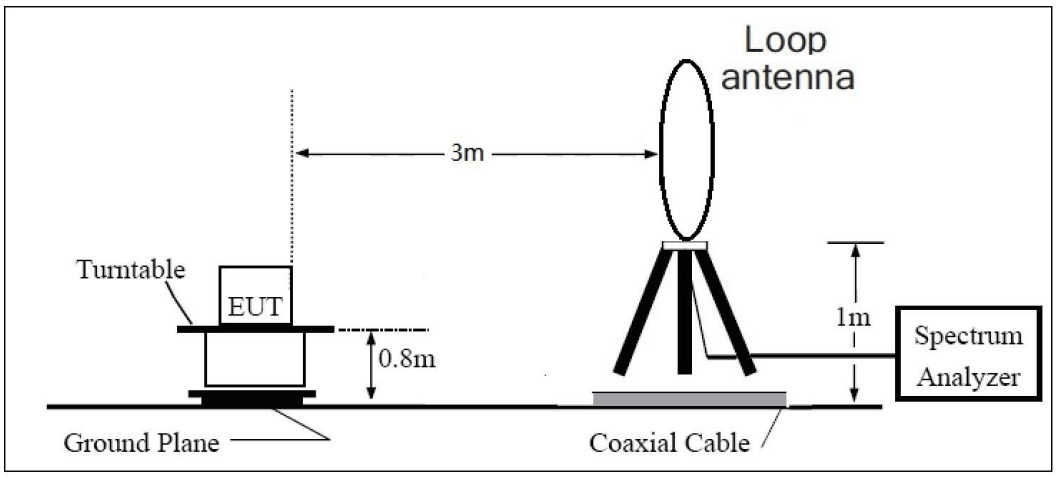

Note: Area side:2.4mX3.6m

Distance 10m

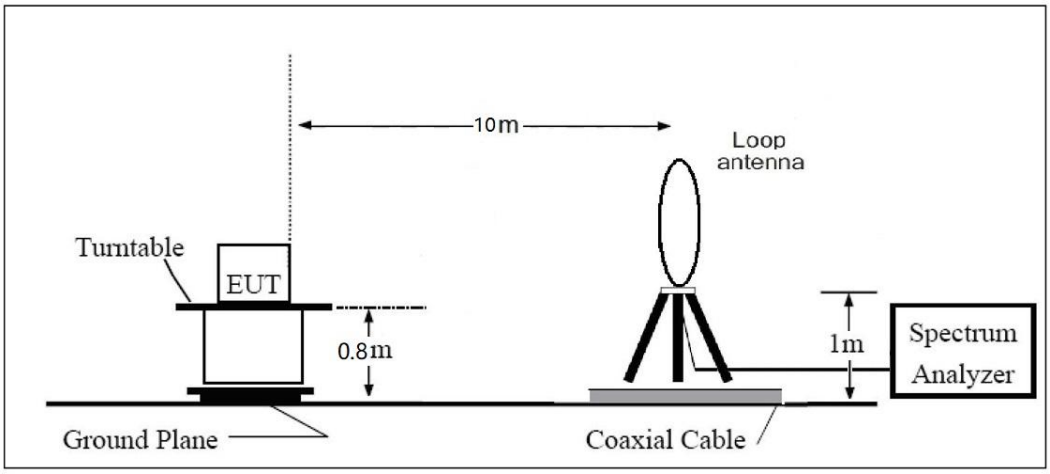

Note: Area side: 21m x 12m

This report shall not be reproduced except in full, without the written approval of Eurofins TA Technology (Shanghai) Co., Ltd.

30MHz~ 1GHz

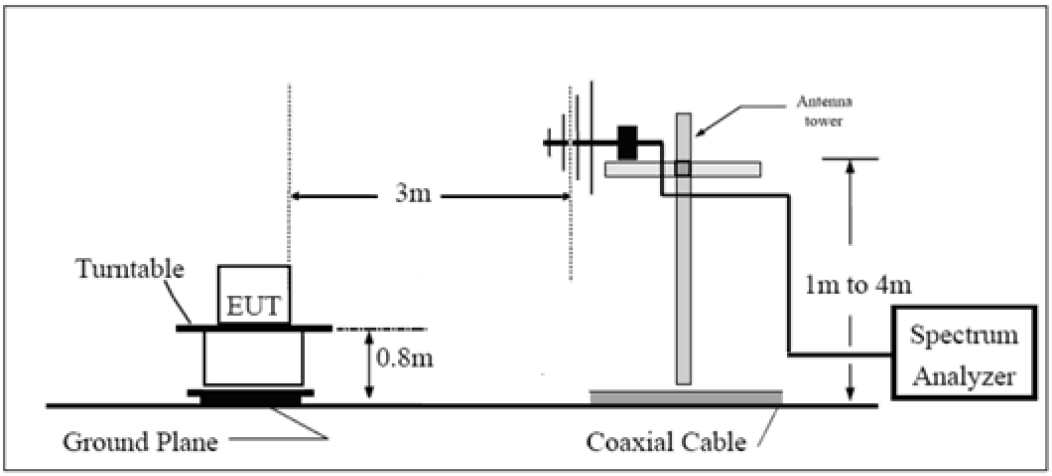

Note: Area side:2.4mX3.6m

Distance 10m

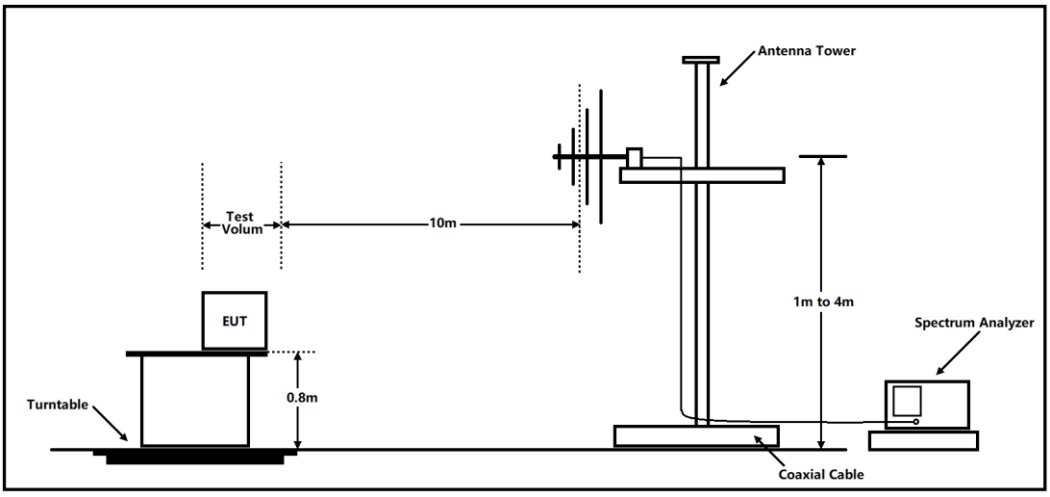

Note: Area side: 21m x 12m

Above 1GHz

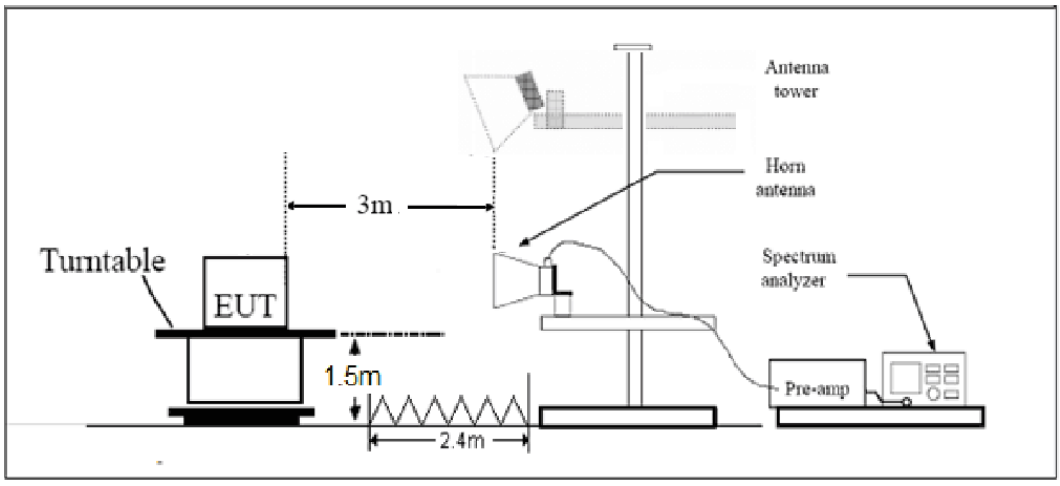

Note: Area side:2.4mX3.6m

This report shall not be reproduced except in full, without the written approval of Eurofins TA Technology (Shanghai) Co., Ltd.

Limits

Rule Part 15.247(d) specifies that "In addition, radiated emissions which fall in the restricted bands, as defined in § 15.205(a), must also comply with the radiated emission limits specified in § 15.209(a) (see § 15.205(c))."

Limit in restricted band

Frequency of emission (MHz)	Field strength(μV/m)	Field strength(dBμV/m)
0.009–0.490	2400/F(kHz)	/
0.490–1.705	24000/F(kHz)	/
1.705–30.0	30	/
30-88	100	40
88-216	150	43.5
216-960	200	46
Above960	500	54

§15.35(b)

There is also a limit on the radio frequency emissions, as measured using instrumentation with a peak detector function, corresponding to 20 dB above the maximum permitted average limit.

Peak Limit=74dBμV/m

Average Limit=54dBμV/m

This report shall not be reproduced except in full, without the written approval of Eurofins TA Technology (Shanghai) Co., Ltd.

Spurious Radiated Emissions are permitted in any of the frequency bands listed below:

MHz	MHz	MHz	GHz
0.090-0.110	16.42-16.423	399.9-410	4.5-5.15
[1] 0.495-0.505	16.69475-16.69525	608-614	5.35-5.46
2.1735-2.1905	16.80425-16.80475	960-1240	7.25-7.75
4.125-4.128	25.5-25.67	1300-1427	8.025-8.5
4.17725-4.17775	37.5-38.25	1435-1626.5	9.0-9.2
4.20725-4.20775	73-74.6	1645.5-1646.5	9.3-9.5
6.215-6.218	74.8-75.2	1660-1710	10.6-12.7
6.26775-6.26825	108-121.94	1718.8-1722.2	13.25-13.4
6.31175-6.31225	123-138	2200-2300	14.47-14.5
8.291-8.294	149.9-150.05	2310-2390	15.35-16.2
8.362-8.366	156.52475-156.52525	2483.5-2500	17.7-21.4
8.37625-8.38675	156.7-156.9	2690-2900	22.01-23.12
8.41425-8.41475	162.0125-167.17	3260-3267	23.6-24.0
12.29-12.293	167.72-173.2	3332-3339	31.2-31.8
12.51975-12.52025	240-285	3345.8-3358	36.43-36.5
12.57675-12.57725	322-335.4	3600-4400	([2])
13.36-13.41			

This report shall not be reproduced except in full, without the written approval of Eurofins TA Technology (Shanghai) Co., Ltd.

Measurement Uncertainty

The assessed measurement uncertainty to ensure 95% confidence level for the normal distribution is with the coverage factor *k* = 1.96.

Frequency	Uncertainty for 3m
9kHz-30MHz	3.55 dB
30MHz-200MHz	4.17 dB
200MHz-1GHz	4.84 dB
1-18GHz	4.35 dB
18-26.5GHz	5.90 dB
26.5GHz~40GHz	5.92 dB
Frequency	Uncertainty for 10m
30MHz – 200MHz	3.39 dB
200MHz – 1GHz	3.82 dB
1GHz – 18GHz	6.51 dB
18GHz – 40GHz	6.31 dB

This report shall not be reproduced except in full, without the written approval of Eurofins TA Technology (Shanghai) Co., Ltd.

5.2 Conducted Emission

Ambient condition

Temperature	Relative humidity	Pressure
15°C ~ 35°C	20% ~ 80%	86 kPa ~ 106 kPa

Methods of Measurement

The EUT is placed on a non-metallic table of 80cm height above the horizontal metal reference ground plane. During the test, the EUT was operating in its typical mode. The test method is according to ANSI C63.10. Connect the AC power line of the EUT to the L.I.S.N. Use EMI receiver to detect the average and Quasi-peak value. RBW is set to 9 kHz, VBW is set to 30kHz.The measurement result should include both L line and N line.
The test is in transmitting mode.

Test Setup

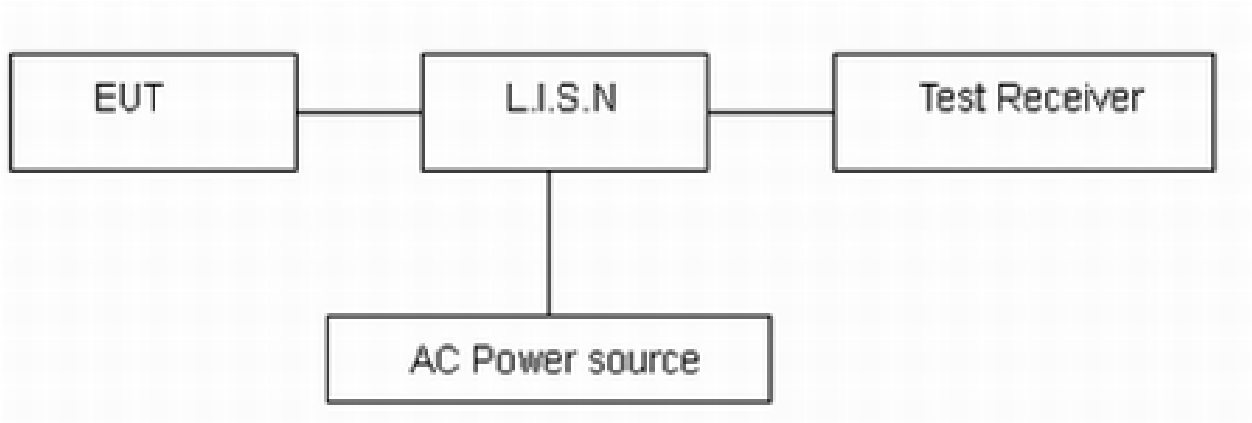

Note: AC Power source is used to 120V/60Hz.

Limits

Frequency (MHz)	Conducted Limits(dBμV)	
	Quasi-peak	Average
0.15 - 0.5	66 to 56 *	56 to 46*
0.5 - 5	56	46
5 - 30	60	50
*: Decreases with the logarithm of the frequency.		

Measurement Uncertainty

The assessed measurement uncertainty to ensure 95% confidence level for the normal distribution is with the coverage factor k = 1.96, U=2.69 dB.

This report shall not be reproduced except in full, without the written approval of Eurofins TA Technology (Shanghai) Co., Ltd.

6 Test Results

6.1 Unwanted Emission

The detailed test data see *EFTA25070076-IE-10-R12V1-ANNEX A* Test Result.

This report shall not be reproduced except in full, without the written approval of Eurofins TA Technology (Shanghai) Co., Ltd.

6.2 Conducted Emission

The detailed test data see *EFTA25070076-IE-10-R12V1-ANNEX A* Test Result.

This report shall not be reproduced except in full, without the written approval of Eurofins TA Technology (Shanghai) Co., Ltd.

7 Main Test Instruments

Name	Manufacturer	Type	Serial Number	Calibration Date	Expiration Date
EMI Test Receiver	R&S	ESCI3	100948	2025-05-07	2026-05-06
Signal Analyzer	R&S	FSV40	101186	2025-05-06	2026-05-05
Loop Antenna	SCHWARZBECK	FMZB1519	1519-047	2023-04-16	2026-04-15
TRILOG Broadband Antenna	SCHWARZBECK	VULB 9163	1023	2023-07-14	2026-07-13
Horn Antenna	SCHWARZBECK	BBHA 9120D	430	2024-07-18	2027-07-17
Horn Antenna	ETS-Lindgren	3160-09	00102643	2024-09-24	2027-09-23
Software	R&S	EMC32	9.26.01	/	/
Artificial main network	R&S	ENV216	101171	2024-12-02	2026-12-01
EMI Test Receiver	R&S	ESR	101667	2025-05-06	2026-05-05
Software	R&S	EMC32	10.35.10	/	/

This report shall not be reproduced except in full, without the written approval of Eurofins TA Technology (Shanghai) Co., Ltd.

8 The EUT Appearance

Refer to *EUT Appearance*.

This report shall not be reproduced except in full, without the written approval of Eurofins TA Technology (Shanghai) Co., Ltd.

9 Test Setup Photos

Refer to *Part15C Test Setup.*

This report shall not be reproduced except in full, without the written approval of Eurofins TA Technology (Shanghai) Co., Ltd.

10 Product Change Description

The Product Change Description are submitted separately.

******** END OF REPORT ********

This report shall not be reproduced except in full, without the written approval of Eurofins TA Technology (Shanghai) Co., Ltd.