RF TEST REPORT

Applicant	Shanghai Sunmi Technology Co.,Ltd.
FCC ID	2AH25D3N
Product	POS System
Brand	SUNMI
Model	F154C
Report No.	EFTA25070076-IE-10-R25V1
Issue Date	December 29, 2025

Eurofins TA Technology (Shanghai) Co., Ltd. tested the above equipment in accordance with the requirements in **FCC CFR47 Part 15C (2025)**. The test results show that the equipment tested is capable of demonstrating compliance with the requirements as documented in this report.

Prepared by: Xu Ying *Approved by: Xu Kai*

Eurofins TA Technology (Shanghai) Co., Ltd.

Building 3, No.145, Jintang Rd, Pudong Shanghai, P.R.China

TEL: +86-021-50791141/2/3

FAX: +86-021-50791141/2/3-8000

TABLE OF CONTENT

1. Test Laboratory 5
1.1. Notes of the Test Report 5
1.2. Test Facility 5
1.3. Testing Location 5
2. General Description of Equipment Under Test 6
2.1. Applicant and Manufacturer Information 6
2.2. General Information 6
3. Applied Standards 7
4. Test Configuration 8
5. Test Case 9
5.1. 20dB Bandwidth 9
5.2. Frequency Stability 10
5.3. Radiates Emission 12
5.4. Conducted Emission 15
6. Test Results 17
6.1. 20dB Bandwidth 17
6.2. Frequency Stability 18
6.3. Radiates Emission 20
6.4. Conducted Emission 21
7. Main Test Instruments 22
8. The EUT Appearance 23
9. Test Setup Photos 24

This report shall not be reproduced except in full, without the written approval of Eurofins TA Technology (Shanghai) Co., Ltd.

Version	Revision Description	Issue Date
Rev.0	Initial issue of report.	December 22, 2025
Rev.1	Updated data.	December 29, 2025
Note: This revised report (Report No.: EFTA25070076-IE-10-R25V1) supersedes and replaces the previously issued report (Report No.: EFTA25070076-IE-10-R25). Please discard or destroy the previously issued report and dispose of it accordingly.		

This report shall not be reproduced except in full, without the written approval of Eurofins TA Technology (Shanghai) Co., Ltd.

Summary of Measurement Results

Number	Test Case	Clause in FCC rules	Verdict
1	20 dB Bandwidth	2.1049	PASS
2	Frequency Stability Tolerance	15.225(e)	PASS
3	Radiated Emissions	15.225 (a) (b) (c) (d) and 15.209	PASS
4	Conducted Emissions	15.207	PASS

Date of Testing: December 12, 2025 ~ December 19, 2025
Date of Sample Received: September 1,2025

Note: PASS: The EUT complies with the essential requirements in the standard.
FAIL: The EUT does not comply with the essential requirements in the standard.
All indications of Pass/Fail in this report are opinions expressed by Eurofins TA Technology (Shanghai) Co., Ltd. based on interpretations and/or observations of test results. Measurement Uncertainties were not taken into account and are published for informational purposes only.

This report shall not be reproduced except in full, without the written approval of Eurofins TA Technology (Shanghai) Co., Ltd.

1. Test Laboratory

1.1. Notes of the Test Report

This report shall not be reproduced in full or partial, without the written approval of **Eurofins TA technology (shanghai) co., Ltd.** The results documented in this report apply only to the tested sample, under the conditions and modes of operation as described herein. Measurement Uncertainties were not taken into account and are published for informational purposes only. This report is written to support regulatory compliance of the applicable standards stated above. This report must not be used by the client to claim product certification, approval, or endorsement by any government agencies.

1.2. Test Facility

FCC (Designation number: CN1179, Test Firm Registration Number: 446626)

Eurofins TA Technology (Shanghai) Co., Ltd. has been listed on the US Federal Communications Commission list of test facilities recognized to perform electromagnetic emissions measurements.

A2LA (Certificate Number: 3857.01)

Eurofins TA Technology (Shanghai) Co., Ltd. has been listed by American Association for Laboratory Accreditation to perform electromagnetic emission measurement.

1.3. Testing Location

Company:	Eurofins TA Technology (Shanghai) Co., Ltd.
Address:	Building 3, No.145, Jintang Rd, Pudong Shanghai, P.R.China
City:	Shanghai
Post code:	201201
Country:	P. R. China
Contact:	Xu Kai
Telephone:	+86-021-50791141/2/3
Fax:	+86-021-50791141/2/3-8000
Website:	https://www.eurofins.com/electrical-and-electronics
E-mail:	Kain.Xu@cpt.eurofinscn.com

This report shall not be reproduced except in full, without the written approval of Eurofins TA Technology (Shanghai) Co., Ltd.

2. General Description of Equipment Under Test

2.1. Applicant and Manufacturer Information

Applicant	Shanghai Sunmi Technology Co.,Ltd.
Applicant address	Room 505,No.388,Song Hu Road, Yang Pu District, Shanghai, China
Manufacturer	Shanghai Sunmi Technology Co.,Ltd.
Manufacturer address	Room 505,No.388,Song Hu Road, Yang Pu District, Shanghai, China

2.2. General Information

EUT Description		
Model	F154C	
SN	D409E599J0017	
Hardware Version	D3_MB_V1.1	
Software Version	V1.0	
Power Supply	AC adapter	
Antenna Type	PIFA Antenna	
Antenna Connector	A permanently attached antenna (meet with the standard FCC Part 15.203 requirement)	
Test Mode	NFC-A	NFC-B
Modulation Type	ASK	ASK, BPSK
Operating Frequency Range(s)	13.56MHz	
Rated Power Supply Voltage	24 VDC	
Operating Voltage	Minimum: 21.6 VDC Maximum:26.4 VDC	
Operating Temperature	Lowest: 0 °C Highest: +40 °C	
Testing Temperature	Lowest: -20 °C Highest: +50 °C	
EUT Accessory		
Adapter	Manufacturer: Shenzhen Tianyin Electronics Co., Ltd. Model: TPQ-632A240250DW01	
Note: The EUT is sent from the applicant to Eurofins TA and the information of the EUT is declared by the applicant.		

This report shall not be reproduced except in full, without the written approval of Eurofins TA Technology (Shanghai) Co., Ltd.

3. Applied Standards

According to the specifications of the manufacturer, it must comply with the requirements of the following standards:

Test standards:

FCC CFR47 Part 15C (2025)

ANSI C63.10-2020

Reference standard:

FCC CFR47 Part 2 (2025)

This report shall not be reproduced except in full, without the written approval of Eurofins TA Technology (Shanghai) Co., Ltd.

4. Test Configuration

Test Mode

The EUT has been associated with peripherals and configuration operated in a manner tended to maximize its emission characteristics in a typical application.

This report shall not be reproduced except in full, without the written approval of Eurofins TA Technology (Shanghai) Co., Ltd.

5. Test Case

5.1. 20dB Bandwidth

Ambient Condition

Temperature	Relative humidity	Pressure
15°C ~ 35°C	20% ~ 80%	86 kPa ~ 106 kPa

Method of Measurement

The EUT was connected to the spectrum analyzer through an external attenuator (20dB) and a known loss cable. RBW is set to 10 kHz; VBW is set to 3 times the RBW on spectrum analyzer.

Note: Because the measured signal is CW or CW-like adjusting the RBW per C63.10 would not be practical since measured bandwidth will always follow the RBW and the result will be approximately twice the RBW.

Test Setup

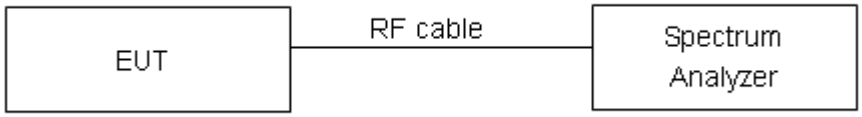

Limits

No specific occupied bandwidth requirements in part 2.1049.

Measurement Uncertainty

The assessed measurement uncertainty to ensure 95% confidence level for the normal distribution is with the coverage factor k = 2, U= 936 Hz.

This report shall not be reproduced except in full, without the written approval of Eurofins TA Technology (Shanghai) Co., Ltd.

5.2. Frequency Stability

Ambient Condition

Temperature	Relative humidity	Pressure
15°C ~ 35°C	20% ~ 80%	86 kPa ~ 106 kPa

Method of Measurement

1. Frequency Stability (Temperature Variation)
   The temperature inside the climate chamber is varied from -20°C to +50°C in 10°C step size,
   (1) With all power removed, the temperature was decreased to 0°C and permitted to stabilize for three hours.
   (2) Measure the carrier frequency with the test equipment in a “call mode”. These measurements should be made within 1 minute of powering up the mobile station, to prevent significant self warming.
   (3) Repeat the above measurements at 10°C increments from -20°C to +50°C. Allow at least 1.5 hours at each temperature, un-powered, before making measurements.
2. Frequency Stability (Voltage Variation)
   The frequency stability shall be measured with variation of primary supply voltage as follows:
   Primary Supply Voltage: The primary supply voltage is varied from 85% to 115% of the nominal value for non hand-carried battery and AC powered equipment. For hand-carried, battery-powered equipment, primary supply voltage is reduced to the battery operating end point which shall be specified by the manufacturer.

   This transceiver is specified to operate with an input voltage of between 21.6 V and 26.4V, with a nominal voltage of 24V.

Test Setup

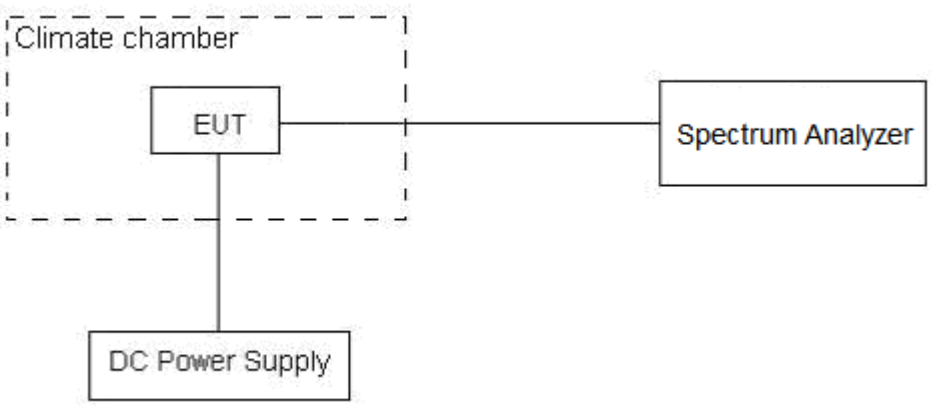

This report shall not be reproduced except in full, without the written approval of Eurofins TA Technology (Shanghai) Co., Ltd.

Limits

Rule Part 15.225 (e) The frequency tolerance of the carrier signal shall be maintained within ±0.01% of the operating frequency over a temperature variation of −20 degrees to + 50 degrees C at normal supply voltage, and for a variation in the primary supply voltage from 85% to 115% of the rated supply voltage at a temperature of 20 degrees C. For battery operated equipment, the equipment tests shall be performed using a new battery.

Measurement Uncertainty

The assessed measurement uncertainty to ensure 99.75％ confidence level for the normal distribution is with the coverage factor k = 3, U= 0.01ppm.

This report shall not be reproduced except in full, without the written approval of Eurofins TA Technology (Shanghai) Co., Ltd.

5.3. Radiates Emission

Ambient Condition

Temperature	Relative humidity	Pressure
15°C ~ 35°C	20% ~ 80%	86 kPa ~ 106 kPa

Method of Measurement

The test set-up was made in accordance to the general provisions of ANSI C63.10. The Equipment Under Test (EUT) was set up on a non-conductive table in the semi-anechoic chamber. The test was performed at the distance of 3 m between the EUT and the receiving antenna. The radiated emissions measurements were made in a typical installation configuration.
Sweep the whole frequency band through the range from 9 kHz to the 10th harmonic of the carrier, and the emissions less than 20 dB below the permissible value are reported.
During the test, below 30MHz, the center of the loop shall be 1 meters; above 30MHz, the height of receive antenna shall be moved from 1 to 4 meters, and the antenna shall be performed under horizontal and vertical polarization. The turntable shall be rotated from 0 to 360 degrees for detecting the maximum of radiated spurious signal level. The measurements shall be repeated with orthogonal polarization of the test antenna. The data of cable loss and antenna factor has been calibrated in full testing frequency range before the testing.
Set the spectrum analyzer in the following:
Out-of-band
Below30MHz
RBW=9KHz, VBW=30KHz, detector=peak;
Above 30MHz,
RBW=100KHz, VBW=300KHz, Detector=peak
In-band
RBW=9KHz, VBW=30KHz, detector=peak;

This report shall not be reproduced except in full, without the written approval of Eurofins TA Technology (Shanghai) Co., Ltd.

Test Setup

9KHz~ 30MHz

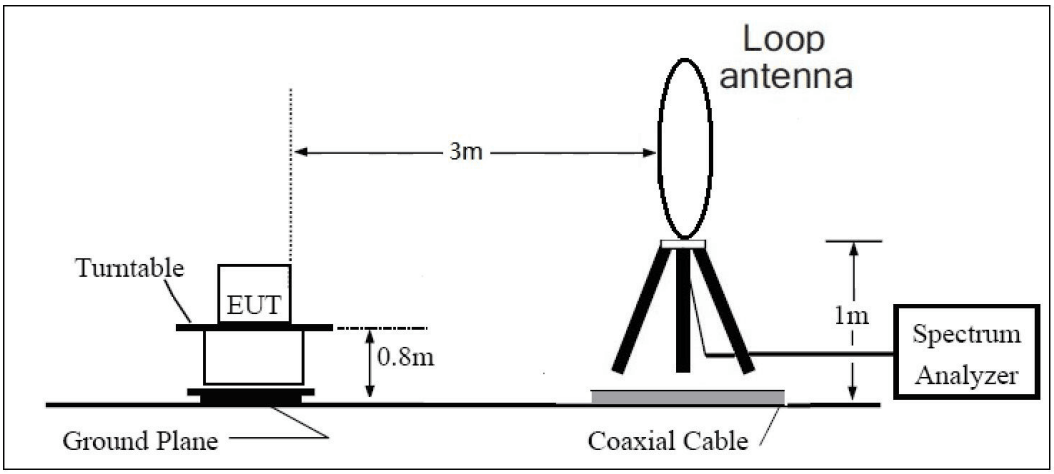

30MHz~ 1GHz

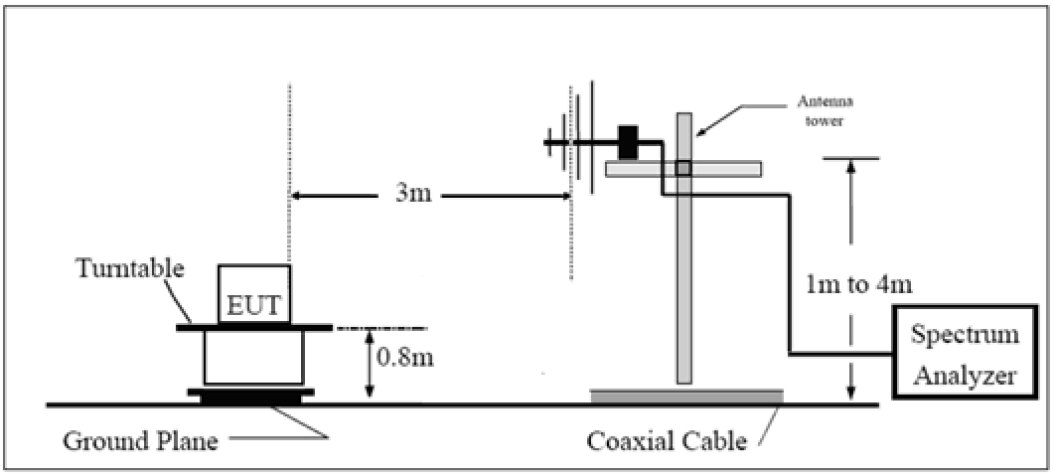

Above 1GHz

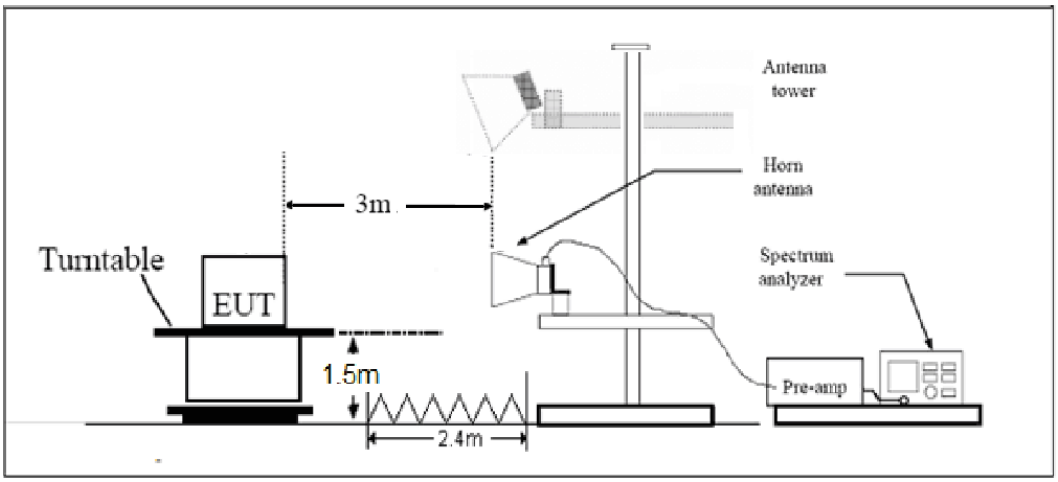

Note: Area side:2.4mX3.6m

This report shall not be reproduced except in full, without the written approval of Eurofins TA Technology (Shanghai) Co., Ltd.

Limits

Clause 15.225(a) the field strength of any emissions within the band 13.553-13.567 MHz shall not exceed 15,848 microvolts/meter at 30 meters.
Clause 15.225(b) within the bands 13.410-13.553 MHz and 13.567-13.710 MHz, the field strength of any emissions shall not exceed 334 microvolts/meter at 30 meters.
Clause 15.225(c) within the bands 13.110-13.410 MHz and 13.710-14.010 MHz the field strength of any emissions shall not exceed 106 microvolts/meter at 30 meters.
Clause 15.225(d) The field strength of any emissions appearing outside of the 13.110-14.010 MHz band shall not exceed the general radiated emission limits in §15.209.
§15.209 (a) Except as provided elsewhere in this subpart, the emissions from an intentional radiator shall not exceed the field strength levels specified in the following table:

Frequency of emission (MHz)	Field strength(μV/m)	Field strength(dBμV/m)
0.009–0.490	2400/F(kHz)	128.519dBμV/m -93.8ddBμV/m
0.490–1.705	24000/F(kHz)	73.8dB dBμV/m -62.969dBμV/m
1.705–30.0	30	69.5 dBμV/m
30-88	100	40 dBμV/m
88-216	150	43.5 dBμV/m
216-960	200	46 dBμV/m
Above960	500	54 dBμV/m

When using other measurement distance, according to the standard C63.10, If that point is closer to the EUT than λ/2π and the limit distance is greater than λ/2π, the data was extrapolated to the specified measurement distance of 30m using extrapolation factor as specified in §6.4.4.2. Extrapolation Factor = 40log(d near filed/ d measure)+20log(d limit / d near filed)
**Except as provided in paragraph (g), fundamental emissions from intentional radiators operating under this section shall not be located in the frequency bands 54-72 MHz, 76-88 MHz, 174-216 MHz or 470-806 MHz. However, operation within these frequency bands is permItted under other sections of this part, e.g., §§15.231 and 15.241.
§15.209 (b) In the emission table above, the tighter limit applies at the band edges.
§15.209 (d) The emission limits shown in the above table are based on measurements employing a CISPR quasi-peak detector except for the frequency bands 9-90 kHz, 110-490 kHz and above 1000 MHz. Radiated emission limits in these three bands are based on measurements employing an average detector.

Measurement Uncertainty

The assessed measurement uncertainty to ensure 95% confidence level for the normal distribution is with the coverage factor *k* = 1.96.

Frequency	Uncertainty
9KHz-30MHz	3.55 dB
30MHz-200MHz	4.02 dB
200MHz-1GHz	3.28 dB
Above 1GHz	3.70 dB

This report shall not be reproduced except in full, without the written approval of Eurofins TA Technology (Shanghai) Co., Ltd.

5.4. Conducted Emission

Ambient Condition

Temperature	Relative humidity	Pressure
15°C ~ 35°C	20% ~ 80%	86 kPa ~ 106 kPa

Methods of Measurement

The EUT is placed on a non-metallic table of 80cm height above the horizontal metal reference ground plane. During the test, the EUT was operating in its typical mode. The test method is according to ANSI C63.10. Connect the AC power line of the EUT to the L.I.S.N. Use EMI receiver to detect the average and Quasi-peak value. RBW is set to 9 kHz, VBW is set to 30kHz.
The measurement result should include both L line and N line.
The test is in transmitting mode.

Test Setup

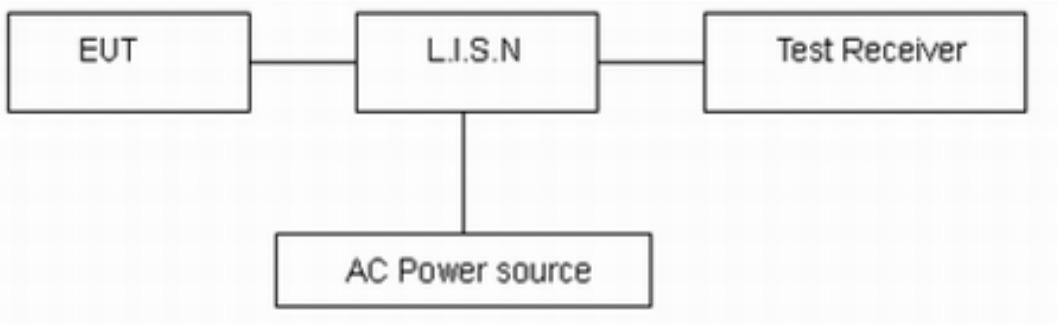

Note: AC Power source is used to change the voltage 110V/60Hz.

Limits

§15.207 (a) Except as shown in paragraphs (b) and (c) of this section, for an intentional radiator that is designed to be connected to the public utility (AC) power line, the radio frequency voltage that is conducted back onto the AC power line on any frequency or frequencies, within the band 150 kHz to 30 MHz, shall not exceed the limits in the following table, as measured using a 50 μH/50 ohms line impedance stabilization network (LISN). Compliance with the provisions of this paragraph shall be based on the measurement of the radio frequency voltage between each power line and ground at the power terminal. The lower limit applies at the boundary between the frequency ranges.

Frequency (MHz)	Conducted Limits(dBμV)	
	Quasi-peak	Average
0.15 - 0.5	66 to 56 *	56 to 46*
0.5 - 5	56	46
5 - 30	60	50
*: Decreases with the logarithm of the frequency.		

This report shall not be reproduced except in full, without the written approval of Eurofins TA Technology (Shanghai) Co., Ltd.

Measurement Uncertainty

The assessed measurement uncertainty to ensure 95% confidence level for the normal distribution is with the coverage factor k = 1.96, U= 2.69 dB.

This report shall not be reproduced except in full, without the written approval of Eurofins TA Technology (Shanghai) Co., Ltd.

6. Test Results

6.1. 20dB Bandwidth

NFC-A

Carrier frequency (MHz)	99% Bandwidth (kHz)	20dB Bandwidth (kHz)	Conclusion
13.56MHz	22.933	26.890	PASS

NFC-B

Carrier frequency (MHz)	99% Bandwidth (kHz)	20dB Bandwidth (kHz)	Conclusion
13.56MHz	22.822	26.870	PASS

NFC-A

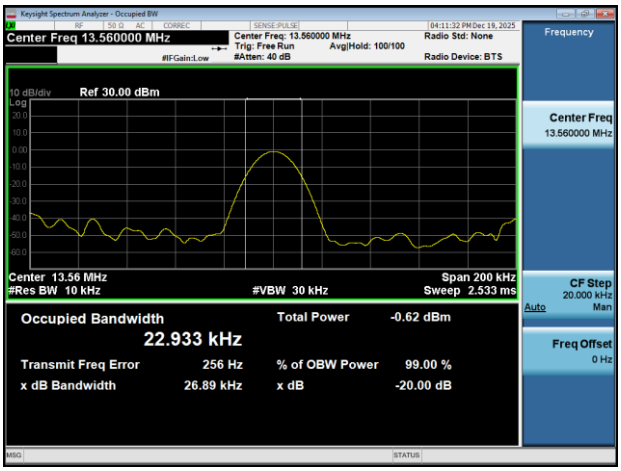

NFC-B

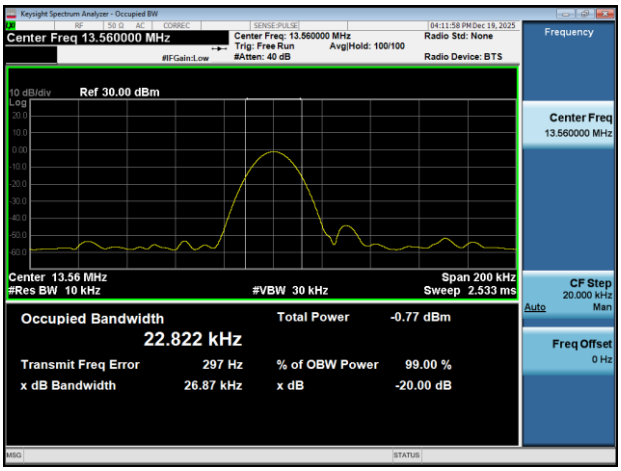

This report shall not be reproduced except in full, without the written approval of Eurofins TA Technology (Shanghai) Co., Ltd.

6.2. Frequency Stability

NFC-A

Test status		Frequency 13.56MHz				Tolerance (MHz)			
temperature(°C)	voltage (V)	1min	2min	5min	10min	1min	2min	5min	10min
-20°C	24.00	13.559348	13.559334	13.559348	13.559349	0.000652	0.000666	0.000652	0.000651
-10°C	24	13.559344	13.559334	13.559345	13.559346	0.000656	0.000666	0.000655	0.000654
0°C	24	13.559339	13.559332	13.559338	13.559344	0.000661	0.000668	0.000662	0.000656
10°C	24	13.559331	13.559329	13.559331	13.559339	0.000669	0.000671	0.000669	0.000661
20°C	24	13.559330	13.559324	13.559325	13.559332	0.000670	0.000676	0.000675	0.000668
30°C	24	13.559329	13.559322	13.559324	13.559324	0.000671	0.000678	0.000676	0.000676
40°C	24	13.559327	13.559319	13.559322	13.559316	0.000673	0.000681	0.000678	0.000684
50°C	24	13.559321	13.559314	13.559318	13.559308	0.000679	0.000686	0.000682	0.000692
20°C	21.6	13.559312	13.559306	13.559312	13.559306	0.000688	0.000694	0.000688	0.000694
20°C	26.4	13.559311	13.559297	13.559309	13.559298	0.000689	0.000703	0.000691	0.000702

Test status		Tolerance (%)				Limit (%)	Conclusion
temperature(°C)	voltage (V)	1min	2min	5min	10min		
-20°C	24.00	0.004808	0.004912	0.004808	0.004801	0.01	PASS
-10°C	24	0.004838	0.004912	0.004830	0.004823	0.01	PASS
0°C	24	0.004875	0.004926	0.004882	0.004838	0.01	PASS
10°C	24	0.004934	0.004948	0.004934	0.004875	0.01	PASS
20°C	24	0.004941	0.004985	0.004978	0.004926	0.01	PASS
30°C	24	0.004948	0.005000	0.004985	0.004985	0.01	PASS
40°C	24	0.004963	0.005022	0.005000	0.005044	0.01	PASS
50°C	24	0.005007	0.005059	0.005029	0.005103	0.01	PASS
20°C	21.6	0.005074	0.005118	0.005074	0.005118	0.01	PASS
20°C	26.4	0.005081	0.005184	0.005096	0.005177	0.01	PASS

This report shall not be reproduced except in full, without the written approval of Eurofins TA Technology (Shanghai) Co., Ltd.

NFC-B

Test status		Frequency				Tolerance (MHz)			
		13.56MHz							
temperature(°C)	voltage (V)	1min	2min	5min	10min	1min	2min	5min	10min
-20°C	24.00	13.559333	13.559351	13.559343	13.559339	0.000667	0.000649	0.000657	0.000661
-10°C	24	13.559324	13.559345	13.559337	13.559337	0.000676	0.000655	0.000663	0.000663
0°C	24	13.559319	13.559339	13.559333	13.559337	0.000681	0.000661	0.000667	0.000663
10°C	24	13.559318	13.559336	13.559324	13.559337	0.000682	0.000664	0.000676	0.000663
20°C	24	13.559309	13.559330	13.559319	13.559328	0.000691	0.000670	0.000681	0.000672
30°C	24	13.559306	13.559325	13.559312	13.559319	0.000694	0.000675	0.000688	0.000681
40°C	24	13.559303	13.559320	13.559305	13.559313	0.000697	0.000680	0.000695	0.000687
50°C	24	13.559297	13.559320	13.559298	13.559305	0.000703	0.000680	0.000702	0.000695
20°C	21.6	13.559287	13.559317	13.559298	13.559301	0.000713	0.000683	0.000702	0.000699
20°C	26.4	13.559279	13.559317	13.559293	13.559297	0.000721	0.000683	0.000707	0.000703

Test status		Tolerance (%)				Limit (%)	Conclusion
temperature(°C)	voltage (V)	1min	2min	5min	10min		
-20°C	24.00	0.004919	0.004786	0.004845	0.004875	0.01	PASS
-10°C	24	0.004985	0.004830	0.004889	0.004889	0.01	PASS
0°C	24	0.005022	0.004875	0.004919	0.004889	0.01	PASS
10°C	24	0.005029	0.004897	0.004985	0.004889	0.01	PASS
20°C	24	0.005096	0.004941	0.005022	0.004956	0.01	PASS
30°C	24	0.005118	0.004978	0.005074	0.005022	0.01	PASS
40°C	24	0.005140	0.005015	0.005125	0.005066	0.01	PASS
50°C	24	0.005184	0.005015	0.005177	0.005125	0.01	PASS
20°C	21.6	0.005258	0.005037	0.005177	0.005155	0.01	PASS
20°C	26.4	0.005317	0.005037	0.005214	0.005184	0.01	PASS

This report shall not be reproduced except in full, without the written approval of Eurofins TA Technology (Shanghai) Co., Ltd.

6.3. Radiates Emission

The detailed test data see *EFTA25070076-IE-10-R25-ANNEX A* Test Result.

This report shall not be reproduced except in full, without the written approval of Eurofins TA Technology (Shanghai) Co., Ltd.

6.4. Conducted Emission

The detailed test data see *EFTA25070076-IE-10-R25-ANNEX A* Test Result.

This report shall not be reproduced except in full, without the written approval of Eurofins TA Technology (Shanghai) Co., Ltd.

7. Main Test Instruments

Name	Manufacturer	Type	Serial Number	Calibration Date	Expiration Time
Spectrum Analyzer	KEYSIGHT	N9020A	MY51330870	2025-05-6	2026-05-5
DC Power Supply	UNI-T	UTP1306S+	2205D0517426	2025-11-24	2026-11-25
Climate Chamber	ESPEC	SU-242	93000506	2025-11-24	2026-11-25
EMI Test Receiver	R&S	ESCI3	100948	2025-05-07	2026-05-06
Signal Analyzer	R&S	FSV40	101186	2025-05-06	2026-05-05
Loop Antenna	SCHWARZBECK	FMZB1519	1519-047	2023-04-16	2026-04-15
TRILOG Broadband Antenna	SCHWARZBECK	VULB 9163	1023	2023-07-14	2026-07-13
EMI Test Receiver	R&S	ESR	101667	2025-05-06	2026-05-05
Software	R&S	EMC32	10.35.10	/	/
Artificial main network	R&S	ENV216	101171	2024-12-02	2026-12-01
EMI Test Receiver	R&S	ESR	101667	2025-05-06	2026-05-05
Software	R&S	EMC32	10.35.10	/	/

This report shall not be reproduced except in full, without the written approval of Eurofins TA Technology (Shanghai) Co., Ltd.

8. The EUT Appearance

Refer to *EUT Appearance*.

This report shall not be reproduced except in full, without the written approval of Eurofins TA Technology (Shanghai) Co., Ltd.

9. Test Setup Photos

Refer to *Part15C Test Setup.*

******** END OF REPORT ********

This report shall not be reproduced except in full, without the written approval of Eurofins TA Technology (Shanghai) Co., Ltd.