Precautions

Security Warning

- Please insert the AC plug into the AC socket corresponding to the identification input on the printer;
- It is strictly prohibited to use it in the presence of any potentially explosive gas.
- Non-professionals should not disassemble the printer at will to avoid danger.
- This is a Class A product. In the living environment, this product may cause radio interference. In this case, the user may be required to take practical measures against interference.

Important Safety Instructions

- Avoid installation or use during lightning, otherwise there is a risk of lightning strike;
- When you find abnormal smell, overheating or smoke, please cut off the power supply immediately.
- The paper tearing knife is sharp, please do not touch it!
- Avoid using in humid environment; Avoid using in dusty or inflammable and explosive occasions.

Recommendations

- Do not use it near water or humid environment to prevent liquid from falling into the terminal.
- Do not use in extremely cold and hot environments, such as cigarettes close to fire sources or ignited;
- Try to use it in a clean and dust-free environment to prevent small items from falling into the terminal.
- Do not use in the vicinity of medical equipment without permission.

Statement

The Company is not responsible for the following situations:
Damage caused by use and maintenance not under the conditions described in this Guide;
Damage or problems caused by options or consumables (not the original products or approved products provided by the Company).
(the user has no right to modify or change the product without the consent of the Company)

Disclaimer

Due to the update of the product, some details of this Guide may not be in conformity with the product. Please refer to the actual product.
The right to interpret this Guide belongs to the Company. We reserve the right to amend this Guide without prior notice.

Usage Scenarios

It is mainly used in such commercial scenarios as food delivery, scan-to-order, and order broadcasting.
Target customers: restaurants, bakeries, retail stores.
Available functions: order printing, order and payment information broadcasting.

Table of Toxic and Hazardous Substances and Content in the Product

Part Name	Toxic or harmful substances or elements					
	Pb	Hg	Cd	Cr(VI)	PBB	PBDE
Circuit board assembly	×	○	○	○	○	○
Print head assembly	○	○	○	○	○	○
Structural part	○	○	○	○	○	○
Package	○	○	○	○	○	○

○: indicates that the content of the toxic and hazardous substance in all homogeneous materials of the component is below the limit specified in SJ/T 11363-2006.

×: indicates that the content of the toxic and hazardous substance in at least one homogeneous material of the component exceeds the limit stipulated in SJ/T 11363-2006. However, as for the reason, because there is no mature and replaceable technology in the industry at present.

The products that have reached or exceeded environmental protection service life should be recycled and reused according to the Regulations on Control and Management of Electronic Information Products, and should not be discarded randomly.

FCC Statement

Please take attention that Changes or modifications not expressly approved by the party responsible for compliance could void the user's authority to operate the equipment.
This device complies with Part 15 of the FCC Rules. Operation is subject to the following two conditions:
(1) This device may not cause harmful interference, and
(2) This device must accept any interference received, including interference that may cause undesired operation.

FCC Radiation Exposure Statement
This equipment complies with FCC radiation exposure limits set forth for an uncontrolled environment. This equipment should be installed and operated with minimum distance 20cm between the radiator & your body.

80mm Kitchen Cloud Printer

QUICK START GUIDE

NT310&NT311&NT312&NT313

Printer Profile

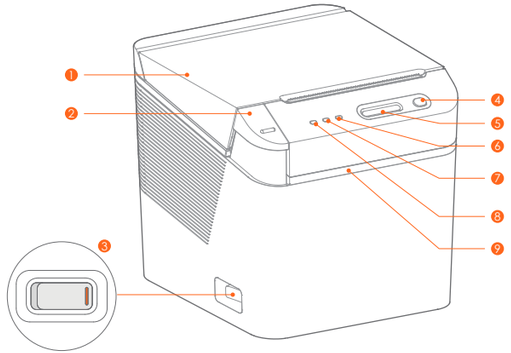

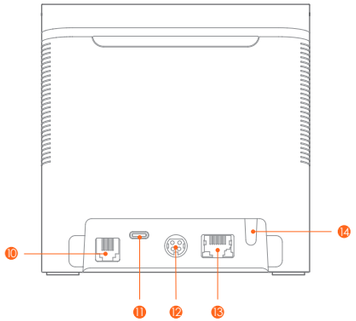

1. Door Cover

2. Door Cover Button
It is used to open the door cover and install/replace the printing roll paper. Press the door cover button and the door cover will pop open automatically.

3. Power Button
Used for controlling the printer power; Press "|" to turn on the printer, and press "No ID" to turn off the printer.

4. Paper Feed Button
Long press the paper feed button to start blank paper feed, and release to stop paper feed.

5. Volume Adjustment Button
"⊕"means volume up, , "⊖"means volume down.

6. Abnormality Indicator
The red light is on, indicating that the printer is short of paper, blocked with paper or with abnormal voltage. The red light flashes, indicating that the print head is overheated. The red light goes out, indicating that the printer is normal.

7. Network Indicator
The blue light is on, indicating that the device is connected to the server. The blue light goes out, indicating that the device is disconnected from the server.

8. Power Indicator
The green light is on, indicating the startup state; The green light goes off, indicating the shutdown state.

9. Reminder Indicator
The white light flashes, indicating that there is paper to be taken away or the paper is blocked. The white light is on, indicating that the paper roll is about to run out (only the sensor with paper will be equipped with this function); The white light goes out, indicating that there is no reminder.

10. Cash Box Port
Connect the cash box and drive the cash box to unlock. This equipment only supports external 24V/1A cash box. Please pay attention to the electrical performance parameters of the cash box. When connecting the cash box, ensure that it is shut down.

11. USB Port
Connect POS machines and other equipment to realize USB printing; Ensure that the printer is shut down when connecting the data cable.

12. DC Power Port
Connect 24V/2.5A DC to supply power to the printer; When connecting the power cord, ensure that the printer power button is in the off position

13. Lan Network Port
Connect the LAN to complete the printing of issued orders from other devices in the LAN; Connect to the WAN to complete the printing of orders issued in the cloud.

14. Pairing Button
Long press for more than 3 seconds to enter the network pairing state. Double-click to execute the network self-inspection program and print the network detection report.

Paper Loading Instructions

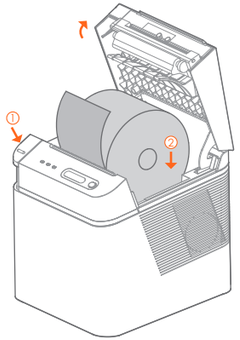

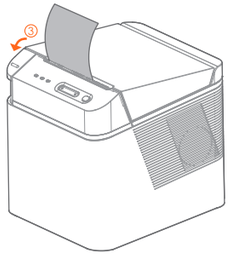

① Press the door cover button to open the printer flip cover.
② Place the printer roll in the direction shown in the figure.

③ Cover the printer flip cover (Note: When printing blank, please make sure that the paper roll is installed in the correct direction)

Common Problems & Troubleshooting

In case of printer failure, please refer to this chapter for corresponding treatment. If the problem still cannot be solved, please contact the distributor or manufacturer.

Failure symptoms	Possible causes	Solutions
Power indicator is not on	The printer is not powered on	Connect the printer to power
	The printer power button is not turned on	Turn on the printer power button
	Power cord damage	Replace the power cord
	Circuit board damage	Contact dealer or manufacturer
Abnormality indicator is on	The printing paper is out of use.	Install new paper roll
Abnormality indicator is on; Voice broadcast: Printer voltage is too high, please check Printer voltage is too low, please check	Abnormal input voltage	Turn off the printer and check the input voltage
Abnormality indicator flashes	Print head overheating	Wait until the print head cools to recover
	Paper blocked	Open the upper cover, check the paper outlet and remove the blocked paper.
The network indicator is not on	Device disconnected from the server	Double-click the pairing button to print the network self-inspection page and check according to the self-inspection report.
The printed content is not clear or tainted.	Print head damaged	Replace printer core.
	Dirty print head or paper feed stick	Clean print head or paper feed stick.
Print out a blank page	Printing paper consumables are reversed.	Refer to the prompt to place consumables.
Print out a blank page	Paper blocked	Check whether the paper roll is loaded correctly.

Note: When cleaning the print head or paper feed rubber roller, do not scratch the print head and rubber stick with hard objects (such as tweezers);
In order to improve the service life of the print head, it is recommended to clean the print head and rubber stick every month. Please use cotton swabs dipped in anhydrous alcohol to gently wipe the print head heating sheet during cleaning.

Basic Specs

Print Method	Direct thermal
Printing Paper Width	Max. 80 mm
Print Line Dots	576 Dots
Effective Print Width	72 mm (±0.1 mm)
Print Speed	Max. 250 mm/s
Memory	64 MB
Flash Memory	256 MB
Font Library	Unicode character set UTF-8, GB18030, KSC5601, JIS0208 and other multi-country codes
Custom Character	Support
Out of Paper Sensor	Out of paper
Cover flip Sensor	Cover flip detection
Paper Blockage Sensor	Printing paper blockage detection
Paper Exhaustion Sensor	Paper exhaustion detection (optional)
Paper Pick-Up Sensor	Printed paper pick-up detection
Temperature Sensor	Overheat detection & protection
Black Label Sensor	Black label printing paper Detection
Power Indicator	Green
Network Indicator	Blue
Abnormality indicator	Red
Reminder Indicator	White

4G (NT312 and NT313 models only)	GSM/TD-SCDMA/UMTS TDD-LTE/FDD-LTE
WiFi (NT311 and NT312 models only)	IEEE 802.11 b/g/n 2.4G
BT (NT311 and NT312 models only)	BT4.2 BLE 2.4GHz
Speaker Power	3W
Speaker Volume	≥105 dB
Power Supply Input	DC 24V/2.5A
Cash Drawer Port	RJ12 24V/1A
USB Port	TYPE-C USB2.0
Lan Port	RJ45 Max. 100 Mbps
Paper Type	Thermal receipt paper
Paper Width	80/58 mm (58 mm paper bin is required)
Paper Thickness	0.075 - 0.008 mm
Till Roll OD	Max. ø80 mm
Paper Cutting Method	Automatic Paper Cutting: Full Cutting/Half Cutting Mode
Till Roll Loading Method	Easy-loading structure with the upturning cover
Dimensions	130×130×130 mm
Print Instruction	ESC/POS
Protection Level	IP52
Working Environment	Temperature: 0℃ to 45℃ Humidity: 30% to 85%
Storage Environment	Temperature: -20℃ to 60℃ Humidity: 10% - 90%

Barcode Specifications	UPC-A\UPC-E\EAN-13\EAN-8\Code 11\Code 39\Code 39 Extended\Code 2 of 5 Matrix\Code 2 of 5 Interleaved\Code 2 of 5 Industrial\Code 2 of 5 IATA\PDF417 Truncated\PDF417\Code 2 of 5 Datalogic\CODABAR\Code 93\Code 128\GS1 DataBar\GS1 DataBar Expanded\MSI Plessey

Manufacture
Shanghai Sunmi Technology Co., Ltd.
Room 605,Block 7,KIC Plaza,No.388 Song Hu Road Yang Pu District,Shanghai,China

Please read this Guide carefully before using the product and keep it properly.
For more help, please feel free to visit SUNMI's website www.sunmi.com