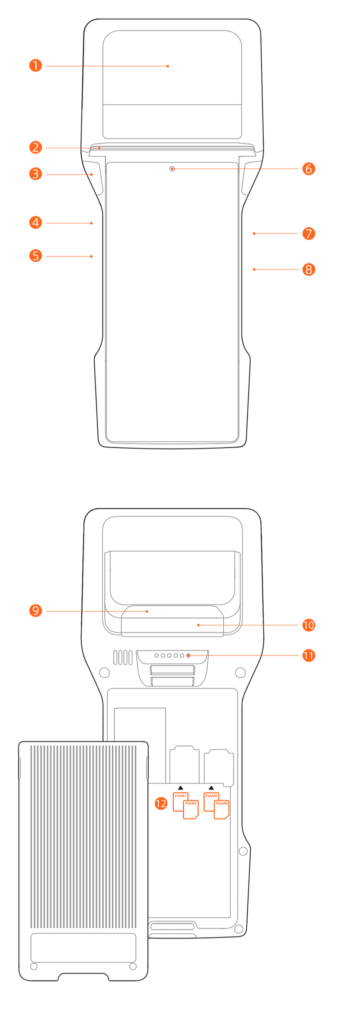

快速入门指南

❶ NFC读卡器(选配)
用于感应会员卡等NFC卡。

❷ 打印机
用于开机状态下打印单据。

❸ 扫码键/灯带（选配）
短按启动扫码功能。

❹ Type-C
可用于给设备充电和开发者调试使用。

❺ Micro SD卡插槽/Nano SIM卡插槽
用于插入Micro SD卡及Nano SIM卡。

❻ 前置摄像头（选配）
用于视频会议或拍摄图像和视频。

❼ 电源键
短按：点亮屏幕，锁定屏幕。
长按：关机状态下，长按 2-3 秒开机；
使用状态下，长按 2-3 秒，可选择关机或重启；
死机状态下，长按 11 秒，自动重启。

❽ 音量键
调节音量大小。

❾ 扫码头（选配）
用于条码数据采集。

❿ 后置摄像头
支持拍照及1D/2D快速扫码。

⓫ Pogo pin
用于搭配扫码配件或者连接扩展底座时实现通讯和充电功能。

⓬ PSAM卡卡槽（选配）
用于插入加密PSAM卡。

打印说明

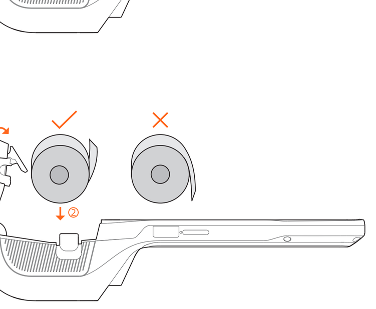

本机支持80mm热敏票据纸，标签纸，另外可选配支持黑标。
规格为 79±0.5mm×Ø50mm
·请通过摁压开启打印纸仓(图示①)，勿强行打开纸仓，防止打印头齿轮磨损；
·按照图示方向，将打印纸正确放入纸仓，并拉出部分纸至切刀外(图示②)；
·盖好纸仓盖，打印纸安装完成(图示③)。
注意：如果打印内容空白，请检查纸卷方向是否放反。

本产品有毒有害物质名称及含量标识表

部件名称	有毒有害物质或元素					
	铅(Pb)	汞(Hg)	镉(Cd)	六价铬(Cr(VI))	多溴联苯(PBB)	多溴二苯醚(PBDE)
电路板组件	×	○	○	○	○	○
结构件	○	○	○	○	○	○
包装件	○	○	○	○	○	○

○：表示该有毒有害物质在该部件所有均质材料中的含量均在SJ/T11363-2006规定的限量要求以下。

×：表示该有毒有害物质至少在该部件的某一均质材料中的含量超出SJ/T11363-2006规定的限量要求；但是上表中打“×”的部件，其含量超出是因为目前业界还没有成熟的可替代的技术。

对达到或超出环保使用年限的产品，应依据《电子信息产品控制管理办法》规定进行回收再利用，不应随意丢弃。

注意事项

安全警告

· 请将交流电插头插入与配件电源适配器上标识输入相对应的交流电插座中；
· 此为A级产品。在生活环境中，该产品可能会造成无线电干扰。在这种情况下，可能需要用户对于干扰采取切实可行的措施。
· 仅使用本机自带电池；
· 存在爆炸性气体时请勿更换电池；
· 请勿在危险场所充电。

重要安全说明

· 避免在雷电期间安装或使用，否则有被雷电电击的危险；
· 当您发现有异常气味，过热或烟雾情形下，请立刻切断电源；
· 撕纸刀较锋利，请勿触碰！
· 请使用原装适配器

建议

· 不要在极端冷、热环境中使用，例如靠近火源或点燃的香烟；
· 不要摔、投掷或弯折；
· 尽量在清洁无尘环境中使用，避免细小物品落入终端中；
· 在未获允许的情况下，不要在医疗设备附近使用。

声明

本公司不对以下行为负责
· 不在本指南说明的条件下使用和维护所造成的损坏；
· 对于因选件或耗材(非本公司提供之最初产品或认可产品)造成的损坏或问题；(未经本公司同意，无权进行产品修改或变动)
· 本产品的操作系统支持官方的系统更新，如果用户刷了第三方的ROM系统或者采用破解方式修改了系统文件，可能会导致系统不稳定，以及带来安全风险和安全威胁。

免责申明

由于产品的更新，此文档的某些细节可能与产品不符，请以实物为准，此文档的解释权归本公司。保留不预先通知的情况下，修改本说明书的权利。

使用场景

2G/3G/4G 主要用于商用场景下的移动数据终端目标客户：餐饮店，零售店，景区，扫码支付。
实现功能:外卖接单，点菜，排队等位，会员核销，门票 验证，通话功能。

系统预置软件列表

· 应用市场 · 推送服务 · 用户反馈 · 数据服务 · 启动器 · 硬件管家
· 功能键自定义 · BaseService · 定制服务(壁纸、开机动画)
· 开发者指南(调试小助手) · 使用指南 · 开机指导 · 远程协助 · OTA

以上软件详细信息查询方法：选择“设置->应用”，选择相应软件名称进行查看信息；
软件卸载方法：选择“设置->应用->管理应用->卸载”卸载应用。或长按图标，拖曳到垃圾桶卸载。

产品保修卡

产品名称：________
产品型号：________
产品编号：________
购买日期：________
保修期限：自购买之日起，我公司提供 ____ 天保修服务。

以下情况恕不提供免费保修：
· 未经允许擅自拆卸修理的产品。
· 产品条码、易碎贴破损及保修卡涂改、残缺的。
· 未按照说明书的要求操作设备所引起的故障。
· 因进水或跌落而造成的故障、划伤或破损的人为损坏。
· 因不可抗拒因素造成的故障或损坏。
· 保修期限外。

联系方式：
· 公司地址：________
· 联系电话：________

产品合格证

产品合格证
检验合格

制造商：上海商米科技集团股份有限公司
地　址：上海市杨浦区淞沪路388号创智天地7号楼505室
M05052160
PVT

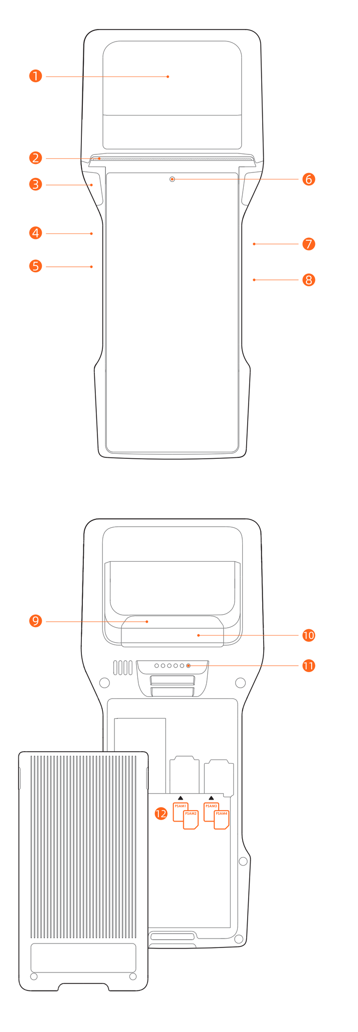

Quick Start

❶ NFC Reader (optional)
For reading NFC cards, like loyalty cards.

❷ Printer
For printing receipts when the device is on.

❸ Scan Button/LED (optional)
Short press to enable barcode scanning function.

❹ Type-C
For device charging and developer debugging.

❺ Micro SD Card Slot/Nano SIM Card Slot
For installing the Micro SD card and Nano SIM card.

❻ Front Camera (optional)
For video conference, or photo/video taking.

❼ Power Button
Short press: wake up the screen, lock the screen.
Long press: long press for 2-3 seconds to turn on the device when it is off. Long press for 2-3 seconds to select to power off or reboot the device when it is on. Long press for 11 seconds to reboot a device when the system is frozen.

❽ Volume Button
For volume adjustment.

❾ Scanner (optional)
For barcode data collection.

❿ Rear Camera
For photo taking and quick 1D/2D barcode reading.

⓫ Pogo pin
For connecting a barcode scanning accessory, or a cradle for communication and charging.

⓬ PSAM Card Slots (optional)
For installing the PSAM cards.

Printing Instructions

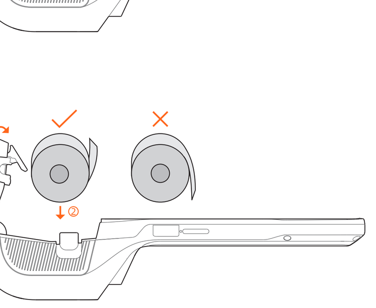

This device can load a 80mm thermal receipt or label paper roll, and black label is also optional.
The paper roll spec is 79±0.5mm×Ø50mm.
· Please press to open the printer (see ①). Please do not force open the printer to avoid printhead gear wear;
· Load the paper into the printer and pull some paper outside the cutter following the direction shown in ②;
· Close the cover to complete paper loading (see ③).
Notice: If the printer prints blank paper, please check whether the paper roll has been loaded in the correct direction.
Tips: To clean a label printhead, it is recommended to use a cotton swab dipped in alcohol or a alcohol prep pad (75% isopropyl alcohol) to wipe the printhead.

Table for Names and Content Identification of Toxic and Hazardous Substances in this Product

Part Name	Toxic or Hazardous Substances and Elements									
	Pb	Hg	Cd	Cr(VI)	PBB	PBDE	DEHP	DBP	BBP	DIBP
Circuit Board Component	×	○	○	○	○	○	○	○	○	○
Structural Component	○	○	○	○	○	○	○	○	○	○
Packaging Component	○	○	○	○	○	○	○	○	○	○

○: indicates that the content of the toxic and hazardous substance in all homogeneous materials of the component is below the limit specified in SJ/T 11363-2006.

×: indicates that the content of the toxic and hazardous substance in at least one homogeneous material of the component exceeds the limit stipulated in SJ/T 11363-2006. However, as for the reason, because there is no mature and replaceable technology in the industry at present.

The products that have reached or exceeded environmental protection service life should be recycled and reused according to the Regulations on Control and Management of Electronic Information Products, and should not be discarded randomly.

Notices

Safety Warning

Connect the AC plug to the AC socket corresponding to the marked input of the power adapter;
To avoid injury, unauthorized persons shall not open the power adapter;
This is a Class A product. This product may cause radio interference in living environments.
In that case, the user may be required to take adequate measures against interference.
Battery replacement:
1.Explosion danger may arise if replacing with the wrong battery
2.The replaced battery shall be disposed of by maintenance personnel, and please do not throw it into fire

Significant Safety Instructions

Do not install or use the device during lightning storms to avoid the potential risks of lightning shock;
Please turn off the power immediately if you notice abnormal odor, heat or smoke;
The paper cutter is sharp, please do not touch

Suggestions

· Do not use the terminal near water or moisture to prevent liquid from falling into the terminal;
Do not use the terminal in extremely cold or hot environments, such as near flames or lit cigarettes;
Do not drop, throw or bend the device;
Use the terminal in a clean and dust-free environment if possible to prevent small items from falling into the terminal;
Please do not use the terminal near medical equipment without permission.

Statements

The Company does not assume responsibilities for the following actions:
Damages caused by use and maintenance without complying with the conditions specified in this guide;
The Company will not assume any responsibilities for the damages or problemscaused by optional items or consumables (rather than the initial products or approvedproducts of the Company). The customer is not entitled to change or modify the product without our consent.
The product's operating system supports official systemupdates, but if you change the operating system into a third party ROM system or alter the system files by system cracking, it may cause system instability and security risks and threats.

Disclaimer

As a result of product upgrading, some details in this document may not match the product, and the actual product shall govern. The Company reserves the right of interpretation of this document. The Company also reserves the right toalter this specification without prior notice.

EU regulatory conformance

Hereby, Shanghai Sunmi Technology Co., Ltd. declares that this device is in compliance with the essential requirements and other relevant provisions of Radio Equipment Directive 2014/53/EU.
The description of accessories andcomponents, including software, which allow the radio equipment to operate as intended, can be obtained in the full text of the EU declaration of conformity is available at the following internet address: https://developer.sunmi.com/docs/read/en-US/maaeghjk480

RESTRICTIONS OF USE

This product may be used in the following European member states subject to the following restrictions. For products that operate in the frequency band 5150-5350MHz and 5945-6425 MHz（If the product support 6e）, wireless access systems (WAS), including radio local area networks (RLANs), shall be restricted to indoor use.

EU Representative:SUNMI France SAS
186,avenue Thiers,69006 Lyon,France

This symbol means that it is forbidden to dispose the product of with normal household waste. At the end of the product life cycle, waste equipment should be taken to designated collection points, returned to the distributor when purchasing a new product, or contact your local authority representative for detailed information on WEEE recycling.

AT	BE	BG	HR	CY	CZ	DK
EE	FI	FR	DE	EL	HU	IE
IT	LV	LT	LU	MT	NL	PL
PT	PO	SK	SI	ES	SE	UK(NI)
IS	LI	NO	CH	TR		

Note:In all EU member states,operation of 5150-5350MHz and 5945-6425MHz（If the product support 6e）restricted to indoor use only.

RF Exposure Statement (SAR)

· This equipment complies with EU radiation exposure limits set forth for an uncontrolled environment.
Please refer to the instruction on SUNMI website for specific values.

Frequency and Power for EU:

Please refer to the instruction on SUNMI website for specific values.

Band	Frequency	Power（dBm）
GSM900	880-915	34.00
DCS1800	1710-1785	31.00
WCDMA Band Ⅰ	1920-1980	24.00
WCDMA Band VIII	880-915	24.00
LTE Band 1	1920-1980	25.00
LTE Band 3	1710-1785	25.00
LTE Band 7	2500-2570	24.50
LTE Band 8	880-915	25.00
LTE Band 20	832-862	25.00
LTE Band 28	703-748	23.00
LTE Band 38	2570-2620	25.00
LTE Band 40	2300-2400	25.00
BT	2402-2480	9.39
BLE	2402-2480	5.34
WLAN	2412-2472	17.55
WLAN	5150-5350	15.98
WLAN	5470-5725	15.54
WLAN	5725-5850	13.02
GNSS	1559-1610	
NFC	13.56	42.45dBμV/m@10m

ISED Canada compliance statements

This device complies with ISED Canada licence-exempt RSS standard(s). Operation is subject to the following two conditions: (1) this device may not cause interference, and (2) this devi must accept any interference, including interference that may cause undesired operation of the device.Le présent appareil est conforme aux CNR d'ISDE Canada applicables aux appareils radio exempts de licence. L'exploitation est autorisée aux deux conditions suivantes:(1) L'appareil ne doit pas produire de brouillage, et (2) L'appareil doit accepter tout brouillage radioélectrique subi, même si le brouillage est susceptible d'en compromettre le fonctionnement.
the device for operation in the band 5150-5250 MHz is only for indoor use to reduce the potential for harmful interference to co-channel mobile satellite systems;
Les dispositifs fonctionnant dans la bande 5150-5250 MHz sont réservés uniquement pour une utilisation à l'intérieur afin de réduire les risques de brouillage préjudiciable aux systèmes de satellites mobiles utilisant les mêmes canaux.

This device complies with Part 15 of the FCC Rules. Operation is subject to the following two conditions: (1) this device may not cause harmful interference, and (2) this device must accept any interference received, including interference that may cause undesired operation.
Note: This equipment has been tested and found to comply with the limits for a Class B digital device, pursuant to part 15 of the FCC Rules. These limits are designed to provide reasonable protection against harmful interference in a residential installation. This equipment generates, uses and can radiate radio frequency energy and, if not installed and used in accordance with the instructions, may cause harmful interference to radio communications. However, there is no guarantee that interference will not occur in a particular installation.If this equipment does cause harmful interference to radio or television reception, which can be determined by turning the equipment off and on, the user is encouraged to try to correct the interference by one or more of the following measures:
—Reorient or relocate the receiving antenna.
—Increase the separation between the equipment and receiver.
—Connect the equipment into an outlet on a circuit different from that to which the receiver is connected.
—Consult the dealer or an experienced radio/TV technician for help.
Caution: The user is cautioned that changes or modifications not expressly approved by the party responsible for compliance could void the user's authority to operate the equipment.

Manufacture

Shanghai Sunmi Technology Co., Ltd.
Room 505, KIC Plaza, No.388 Song Hu Road, Yang Pu District, Shanghai, China