RF TEST REPORT

Applicant	Shanghai Sunmi Technology Co.,Ltd.
FCC ID	2AH25T6F1P
Product	Smart POS System
Brand	SUNMI
Model	T6F1P
Report No.	EFTA26030124-IE-02-R5
Issue Date	May 9, 2026

Eurofins TA Technology (Shanghai) Co., Ltd. tested the above equipment in accordance with the requirements in **FCC CFR47 Part 15E**. The test results show that the equipment tested is capable of demonstrating compliance with the requirements as documented in this report.

Prepared by: Xu Ying | *Approved by: Xu Kai*

Eurofins TA Technology (Shanghai) Co., Ltd.

Building 3, No.145, Jintang Rd, Pudong Shanghai, P.R.China
TEL: +86-021-50791141/2/3
FAX: +86-021-50791141/2/3-8000

TABLE OF CONTENT

1. Test Laboratory 4
1.1. Notes of the Test Report 4
1.2. Test Facility 4
1.3. Testing Location 4
1. General Description of Equipment Under Test 5
2.1. Applicant and Manufacturer Information 5
2.2. General Information 5
3. Applied Standards 7
4. DFS Technical Requirements and Radar Test Waveforms 8
4.1. DFS Overview 8
4.2. DFS Detection Thresholds 9
4.3. Radar Test Waveforms 10
4.4. Test Set-ups 13
5. Test Case 15
5.1. DFS Detection Thresholds 15
5.2. Channel Move Time, Channel Closing Transmission Time and Non-Occupancy Period 16
6. Test Results 18
6.1. DFS Detection Thresholds 18
6.2. Channel Move Time, Channel Closing Transmission Time and Non-Occupancy Period 19
6. Main Test Instruments 21
7. The EUT Appearance 22
8. Test Setup Photos 23

This report shall not be reproduced except in full, without the written approval of Eurofins TA Technology (Shanghai) Co., Ltd.

Summary of Measurement Results

Number	Test Case	Clause in FCC rules	Verdict
1	DFS Detection Threshold	15.407/KDB 905462 5.2	Pass
2	U-NII Detection Bandwidth	15.407/KDB 905462 7.8.1	NA
3	Channel Availability Check Time	15.407/KDB 905462 7.8.2	NA
4	Channel Move Time	15.407/KDB 905462 7.8.3	Pass
5	Channel Closing Transmission Time	15.407/KDB 905462 7.8.3	Pass
6	Non-Occupancy Period (NOP)	15.407/KDB 905462 7.8.3	Pass
7	Statistical Performance Check	15.407/KDB 905462 7.8.4	NA

Date of Testing: March 20, 2026
Date of Sample Received: March 11, 2026

Note: PASS: The EUT complies with the essential requirements in the standard.
FAIL: The EUT does not comply with the essential requirements in the standard.
NA: Not applicable.

All indications of Pass/Fail in this report are opinions expressed by Eurofins TA Technology (Shanghai) Co., Ltd. based on interpretations and/or observations of test results. Measurement Uncertainties were not taken into account and are published for informational purposes only.

This report shall not be reproduced except in full, without the written approval of Eurofins TA Technology (Shanghai) Co., Ltd.

1. Test Laboratory

1.1. Notes of the Test Report

This report shall not be reproduced in full or partial, without the written approval of **Eurofins TA technology (shanghai) co., Ltd.** The results documented in this report apply only to the tested sample, under the conditions and modes of operation as described herein. Measurement Uncertainties were not taken into account and are published for informational purposes only. This report is written to support regulatory compliance of the applicable standards stated above.

1.2. Test Facility

FCC (Designation number: CN1179, Test Firm Registration Number: 446626)

Eurofins TA Technology (Shanghai) Co., Ltd. has been listed on the US Federal Communications Commission list of test facilities recognized to perform electromagnetic emissions measurements.

A2LA (Certificate Number: 3857.01)

Eurofins TA Technology (Shanghai) Co., Ltd. has been listed by American Association for Laboratory Accreditation to perform electromagnetic emission measurement.

1.3. Testing Location

Company:	Eurofins TA Technology (Shanghai) Co., Ltd.
Address:	Building 3, No.145, Jintang Rd, Pudong Shanghai, P.R.China
City:	Shanghai
Post code:	201201
Country:	P. R. China
Contact:	Xu Kai
Telephone:	+86-021-50791141/2/3
Fax:	+86-021-50791141/2/3-8000
Website:	https://www.eurofins.com/electrical-and-electronics
E-mail:	Kain.Xu@cpt.eurofinscn.com

This report shall not be reproduced except in full, without the written approval of Eurofins TA Technology (Shanghai) Co., Ltd.

1. General Description of Equipment Under Test

2.1. Applicant and Manufacturer Information

Applicant	Shanghai Sunmi Technology Co.,Ltd.
Applicant address	Room 505, No.388 Song Hu Road, Yang Pu District, Shanghai, China
Manufacturer	Shanghai Sunmi Technology Co.,Ltd.
Manufacturer address	Room 505, No.388 Song Hu Road, Yang Pu District, Shanghai, China

2.2. General Information

EUT Description	
Model	T6F1P
SN	P34425CBJ2433
Hardware Version	V1.1.P
Software Version	V4.0.1
Power Supply	Battery / AC adapter
Antenna Type	PIFA Antenna
Antenna Gain	2.6 dBi
Operating Frequency Range(s)	U-NII-2A: 5250MHz-5350MHz U-NII-2C: 5470MHz-5725MHz
Modulation Type	802.11a: OFDM 802.11n(HT20/HT40): OFDM 802.11ac (VHT20/VHT40/VHT80): OFDM
Operating Mode	☐Master ☐Client with radar detection ☒Client without radar detection
EUT Accessory	
Adapter	Manufacturer: Shenzhen Tianyin Electronics Co.. Ltd Model: TPA-141A050200UU01
Battery	Manufacturer: Guangdong Fenghua New Energy Co., Ltd. Model: FHPO
Note: The EUT is sent from the applicant to Eurofins TA and the information of the EUT is declared by the applicant.	

This report shall not be reproduced except in full, without the written approval of Eurofins TA Technology (Shanghai) Co., Ltd.

Wireless Technology and Frequency Range

Wireless Technology		Bandwidth	Channel	Frequency
Wi-Fi	U-NII-2A	20 MHz	52	5260MHz
			56	5280MHz
			60	5300MHz
			64	5320MHz
		40 MHz	54	5270MHz
			62	5310MHz
		80 MHz	58	5290MHz
	U-NII-2C	20 MHz	100	5500MHz
			104	5520MHz
			108	5540MHz
			112	5560MHz
			116	5580MHz
			120	5600MHz
			124	5620MHz
			128	5640MHz
			132	5660MHz
			136	5680MHz
			140	5700MHz
			144	5720MHz
		40 MHz	102	5510MHz
			110	5550MHz
			118	5590MHz
			126	5630MHz
			134	5670MHz
			142	5710MHz
		80 MHz	106	5530MHz
			122	5610MHz
			138	5690MHz
Does this device support TPC Function? ☐Yes ☒No				
Does this device support TDWR Band? ☒Yes ☐No				

This report shall not be reproduced except in full, without the written approval of Eurofins TA Technology (Shanghai) Co., Ltd.

3. Applied Standards

According to the specifications of the manufacturer, it must comply with the requirements of the following standards:

Test standards:

FCC CFR47 Part 15E Unlicensed National Information Infrastructure Devices

Reference standard:

FCC KDB 905462 D02 UNII DFS Compliance Procedures New Rules v02

FCC KDB 905462 D03 Client Without DFS New Rules v01r02

This report shall not be reproduced except in full, without the written approval of Eurofins TA Technology (Shanghai) Co., Ltd.

4. DFS Technical Requirements and Radar Test Waveforms

4.1. DFS Overview

Table 1 Applicability of DFS Requirements Prior to Use of a Channel

Requirement	Operational Mode		
	Master	Client Without Radar Detection	Client With Radar Detection
Non-Occupancy Period	Yes	Not required	Yes
DFS Detection Threshold	Yes	Not required	Yes
Channel Availability Check Time	Yes	Not required	Not required
U-NII Detection Bandwidth	Yes	Not required	Yes

Table 2 Applicability of DFS Requirements during Normal Operation

Requirement	Operational Mode	
	Master Device or Client with Radar Detection	Client Without Radar Detection
DFS Detection Threshold	Yes	Not required
Channel Closing Transmission Time	Yes	Yes
Channel Move Time	Yes	Yes
U-NII Detection Bandwidth	Yes	Not required
Additional Requirements for Devices with Multiple Bandwidth Modes	**Master Device or Client with Radar Detection**	**Client Without Radar Detection**
U-NII Detection Bandwidth	All BW modes must be tested	Not required
Statistical Performance Check	All BW modes must be tested	Not required
Channel Closing Transmission Time	Test using widest BW mode available	Test using the widest BW mode available for the link
Channel Move Time	Test using widest BW mode available	Test using the widest BW mode available for the link
All other tests	Any single BW mode	Not required
Note: Frequencies selected for statistical performance check should include several frequencies within the radar detection bandwidth and frequencies near the edge of the radar detection bandwidth. For 802.11 devices it is suggested to select frequencies in each of the bonded 20 MHz channels and the channel center frequency.		

This report shall not be reproduced except in full, without the written approval of Eurofins TA Technology (Shanghai) Co., Ltd.

4.2. DFS Detection Thresholds

Table 3 DFS Detection Thresholds for Master Devices and Client Devices with Radar Detection

Maximum Transmit Power	Value (See Notes 1, 2, and 3)
EIRP ≥ 200 milliwatt	-64 dBm
EIRP < 200 milliwatt and power spectral density < 10 dBm/MHz	-62 dBm
EIRP < 200 milliwatt that do not meet the power spectral density requirement	-64 dBm
Note 1: This is the level at the input of the receiver assuming a 0 dBi receive antenna. **Note 2:** Throughout these test procedures an additional 1 dB has been added to the amplitude of the test transmission waveforms to account for variations in measurement equipment. This will ensure that the test signal is at or above the detection threshold level to trigger a DFS response. **Note3:** EIRP is based on the highest antenna gain. For MIMO devices refer to KDB Publication 662911 D01.	

Table 4 DFS Response Requirement Values

Parameter	Value
Non-occupancy Period	Minimum 30 minutes
Channel Availability Check Time	60 seconds
Channel Move Time	10 seconds See Note 1.
Channel Closing Transmission Time	200 milliseconds + an aggregate of 60 milliseconds over remaining 10 second period. See Notes 1 and 2.
U-NII Detection Bandwidth	Minimum 100% of the U-NII 99% transmission power bandwidth. See Note 3.
Note 1: Channel Move Time and the Channel Closing Transmission Time should be performed with Radar Type 0. The measurement timing begins at the end of the Radar Type 0 burst. **Note 2:** The Channel Closing Transmission Time is comprised of 200 milliseconds starting at the beginning of the Channel Move Time plus any additional intermittent control signals required to facilitate a Channel move (an aggregate of 60 milliseconds) during the remainder of the 10 second period. The aggregate duration of control signals will not count quiet periods in between transmissions. **Note 3:** During the U-NII Detection Bandwidth detection test, radar type 0 should be used. For each frequency step the minimum percentage of detection is 90 percent. Measurements are performed with no data traffic	

This report shall not be reproduced except in full, without the written approval of Eurofins TA Technology (Shanghai) Co., Ltd.

4.3. Radar Test Waveforms

Table 5 Short Pulse Radar Test Waveforms

Radar Type	Pulse Width (μsec)	PRI (μsec)	Number of Pulses	Minimum Percentage of Successful Detection	Minimum Number of Trials
0	1	1428	18	See Note 1	See Note 1
1	1	Test A: 15 unique PRI values randomly selected from the list of 23 PRI values in Table 5a Test B: 15 unique PRI values randomly selected within the range of 518-3066 μsec, with a minimum increment of 1 μsec, excluding PRI values selected in Test A	Roundup	60%	30
2	1-5	150-230	23-29	60%	30
3	6-10	200-500	16-18	60%	30
4	11-20	200-500	12-16	60%	30
Aggregate (Radar Types 1-4)				80%	120
Note 1: *Short Pulse Radar Type 0 should be used for the detection bandwidth test, channel move time, and channel closing time tests.*					

This report shall not be reproduced except in full, without the written approval of Eurofins TA Technology (Shanghai) Co., Ltd.

Table 5a Pulse Repetition Intervals Values for Test A

Pulse Repetition Frequency Number	Pulse Repetition Frequency (Pulses Per Second)	Pulse Repetition Interval (Microseconds)
1	1930.5	518
2	1858.7	538
3	1792.1	558
4	1730.1	578
5	1672.2	598
6	1618.1	618
7	1567.4	638
8	1519.8	658
9	1474.9	678
10	1432.7	698
11	1392.8	718
12	1355	738
13	1319.3	758
14	1285.3	778
15	1253.1	798
16	1222.5	818
17	1193.3	838
18	1165.6	858
19	1139	878
20	1113.6	898
21	1089.3	918
22	1066.1	938
23	326.2	3066

The aggregate is the average of the percentage of successful detections of Short Pulse Radar Types 1-4. For example, the following table indicates how to compute the aggregate of percentage of successful detections.

Radar Type	Number of Trials	Number of Successful Detections	Minimum Percentage of Successful Detection
1	35	29	82.9%
2	30	18	60%
3	30	27	90%
4	50	44	88%
Aggregate (82.9% + 60% + 90% + 88%)/4 = 80.2%			

This report shall not be reproduced except in full, without the written approval of Eurofins TA Technology (Shanghai) Co., Ltd.

Table 6 Long Pulse Radar Test Waveform

Radar Type	Pulse Width (μsec)	Chirp Width (MHz)	PRI (μsec)	Number of Pulses per *Burst*	Number of *Bursts*	Minimum Percentage of Successful Detection	Minimum Number of Trials
5	50-100	5-20	1000-2000	1-3	8-20	80%	30

The parameters for this waveform are randomly chosen.Thirty unique waveforms are required for the Long Pulse Radar Type waveforms. If more than 30 waveforms are used for the Long Pulse Radar Type waveforms, then each additional waveform must also be unique and not repeated from the previous waveforms.

Table 7 Frequency Hopping Radar Test Waveform

Radar Type	Pulse Width (μsec)	PRI (μsec)	Pulses per Hop	Hopping Rate (kHz)	Hopping Sequence Length (msec)	Minimum Percentage of Successful Detection	Minimum Number of Trials
6	1	333	9	0.333	300	70%	30

For the Frequency Hopping Radar Type, the same Burst parameters are used for each waveform. The hopping sequence is different for each waveform and a 100-length segment is selected from the hopping sequence defined by the following algorithm: The first frequency in a hopping sequence is selected randomly from the group of 475 integer frequencies from 5250 – 5724 MHz. Next, the frequency that was just chosen is removed from the group and a frequency is randomly selected from the remaining 474 frequencies in the group. This process continues until all 475 frequencies are chosen for the set. For selection of a random frequency, the frequencies remaining within the group are always treated as equally likely.

This report shall not be reproduced except in full, without the written approval of Eurofins TA Technology (Shanghai) Co., Ltd.

4.4. Test Set-ups

We test the data stream using N7607C Signal Studio V2.2.0.0.

Channel loading is based on IP.

Setup for Master with Injection at the Master

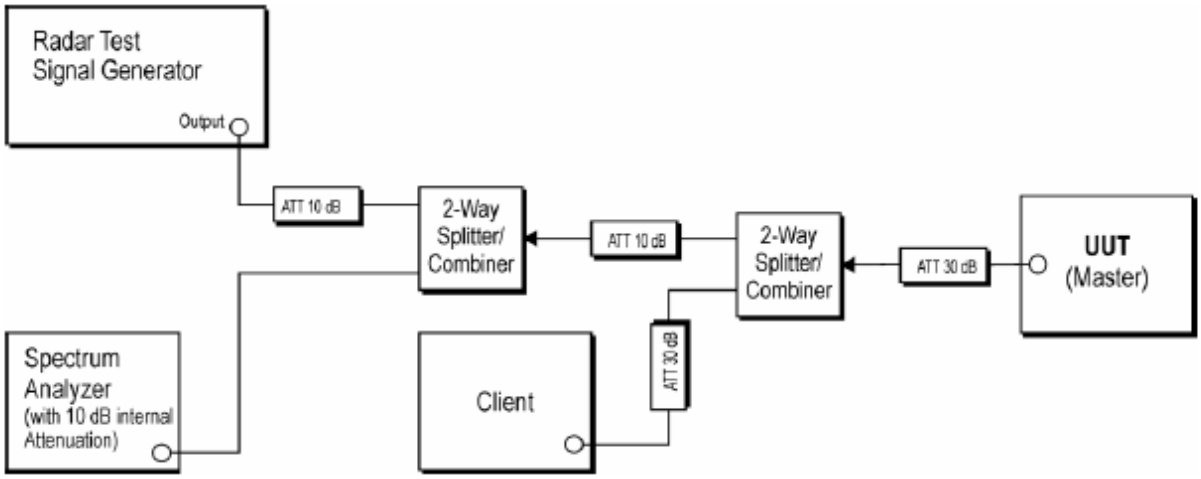

Figure 2: Example Conducted Setup where UUT is a Master and Radar Test Waveforms are injected into the Master

Setup for Client with Injection at the Master

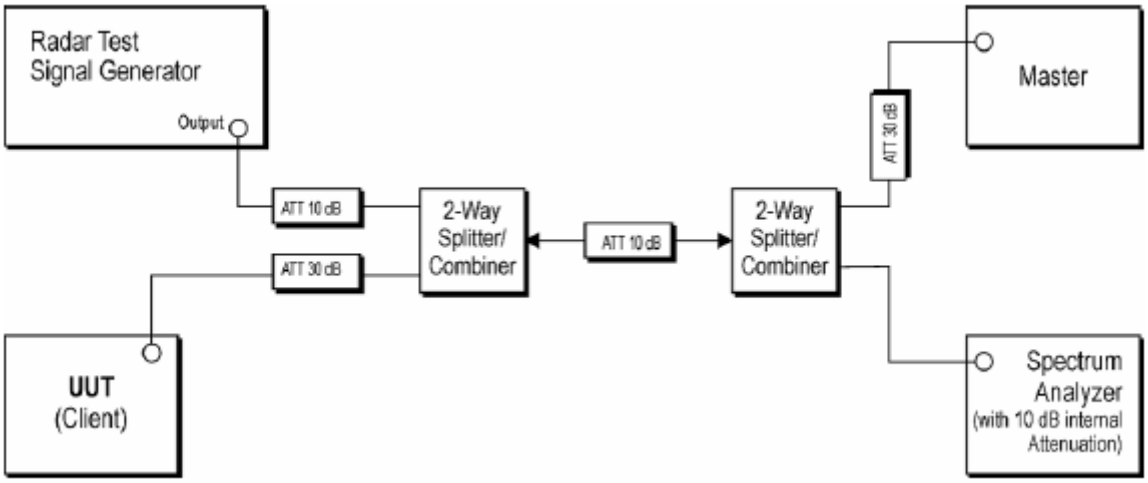

Figure 3: Example Conducted Setup where UUT is a Client and Radar Test Waveforms are injected into the Master

This report shall not be reproduced except in full, without the written approval of Eurofins TA Technology (Shanghai) Co., Ltd.

Setup for Client with Injection at the Client

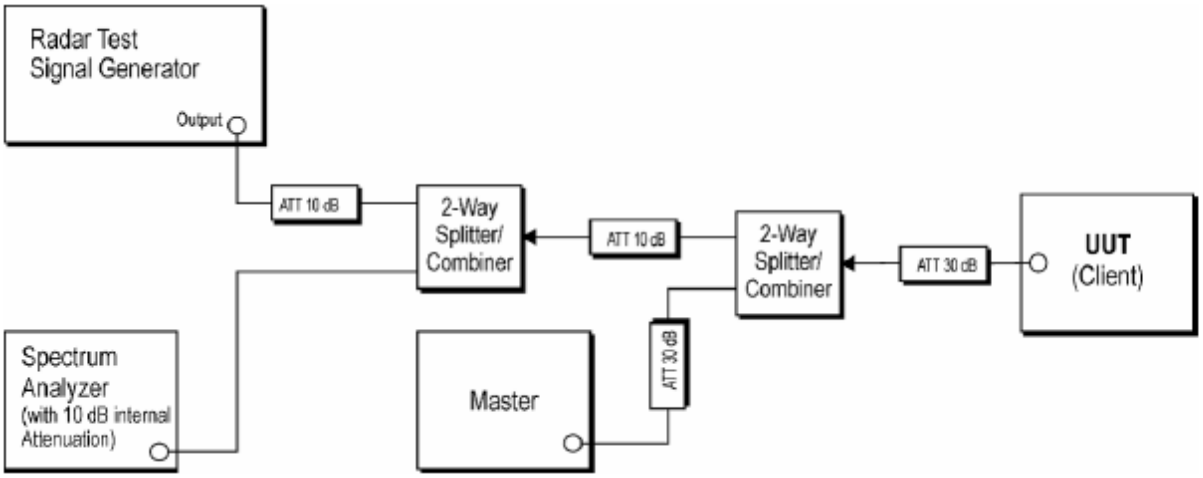

Figure 4: Example Conducted Setup where UUT is a Client and Radar Test Waveforms are injected into the Client

This report shall not be reproduced except in full, without the written approval of Eurofins TA Technology (Shanghai) Co., Ltd.

5. Test Case

5.1. DFS Detection Thresholds

Ambient Condition

Temperature	Relative humidity	Pressure
25°C	57%	101.3 kPa

Methods of Measurement

Client with injection at the Master.
For a detection threshold level of -64dBm, the required signal strength at EUT antenna location is -64dBm, the tested level is lower than required level hence it provides margin to the limit.

Frequency of Calibration	
Bandwidth	Central Frequency
802.11ac 80MHz	5290MHz
	5610MHz

This report shall not be reproduced except in full, without the written approval of Eurofins TA Technology (Shanghai) Co., Ltd.

5.2. Channel Move Time, Channel Closing Transmission Time and Non-Occupancy Period

Ambient Condition

Temperature	Relative humidity	Pressure
25°C	57%	101.3 kPa

Methods of Measurement

These tests define how the following DFS parameters are verified during In-Service Monitoring;
- Channel Closing Transmission Time
- Channel Move Time
- Non-Occupancy Period

The steps below define the procedure to determine the above mentioned parameters when a radar Burst with a level equal to the DFS Detection Threshold + 1dB is generated on the Operating Channel of the U-NII device (In- Service Monitoring).

1. One frequency will be chosen from the Operating Channels of the EUT within the 5250-5350 MHz or 5470-5725 MHz bands. For 802.11 devices, the test frequency must contain control signals. This can be verified by disabling channel loading and monitoring the spectrum analyzer. If no control signals are detected, another frequency must be selected within the emission bandwidth where control signals are detected.

2. In case the EUT is a U-NII device operating as a Client Device (with or without DFS), a U-NII device operating as a Master Device will be used to allow the EUT (Client device) to Associate with the Master Device. In case the EUT is a Master Device, a U-NII device operating as a Client Device will be used and it is assumed that the Client will Associate with the EUT (Master). In both cases for conducted tests, the Radar Waveform generator will be connected to the Master Device. For radiated tests, the emissions of the Radar Waveform generator will be directed towards the Master Device. If the Master Device has antenna gain, the main beam of the antenna will be directed toward the radar emitter. Vertical polarization is used for testing.

3. Stream the channel loading test file from the Master Device to the Client Device on the test Channel for the entire period of the test.

4. At time T_0 the Radar Waveform generator sends a Burst of pulses for one of the Radar Type 0 in Table 5 at levels defined in Table 3, on the Operating Channel. An additional 1 dB is added to the radar test signal to ensure it is at or above the DFS Detection Threshold, accounting for equipment variations/errors.

5. Observe the transmissions of the EUT at the end of the radar Burst on the Operating Channel for duration greater than 10 seconds. Measure and record the transmissions from the EUT during the observation time (Channel Move Time). Measure and record the Channel Move Time and Channel Closing Transmission Time if radar detection occurs. Figure 17 illustrates Channel Closing

This report shall not be reproduced except in full, without the written approval of Eurofins TA Technology (Shanghai) Co., Ltd.

Transmission Time.

6. When operating as a Master Device, monitor the EUT for more than 30 minutes following instant T_2 to verify that the EUT does not resume any transmissions on this Channel. Perform this test once and record the measurement result.

7. In case the EUT is a U-NII device operating as a Client Device with In-Service Monitoring, perform steps 1 to 6.

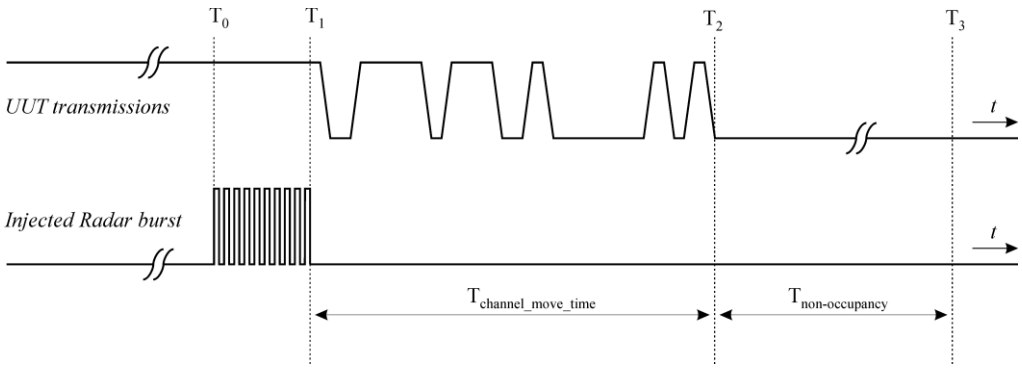

Figure 17: Example of Channel Closing Transmission Time & Channel Closing Time

Limits

Channel Move Time	≤10s
Channel Closing Transmission Time	≤200ms + 60ms (over remaining 10s period)
Non-Occupancy Period	≥30min

Note 1: Channel Move Time and the Channel Closing Transmission Time should be performed with Radar Type 0. The measurement timing begins at the end of the Radar Type 0 burst.

Note 2: The Channel Closing Transmission Time is comprised of 200 milliseconds starting at the beginning of the Channel Move Time plus any additional intermittent control signals required to facilitate Channel move (an aggregate of 60 milliseconds) during the remainder of the 10 second period. The aggregate duration of control signals will not count quiet periods in between transmissions.

Measurement Uncertainty

The assessed measurement uncertainty to ensure 95% confidence level for the normal distribution is with the coverage factor k = 1.96, U=2.69 dB.

This report shall not be reproduced except in full, without the written approval of Eurofins TA Technology (Shanghai) Co., Ltd.

6. Test Results

6.1. DFS Detection Thresholds

Central Frequency: 5290 MHz	Central Frequency: 5610 MHz
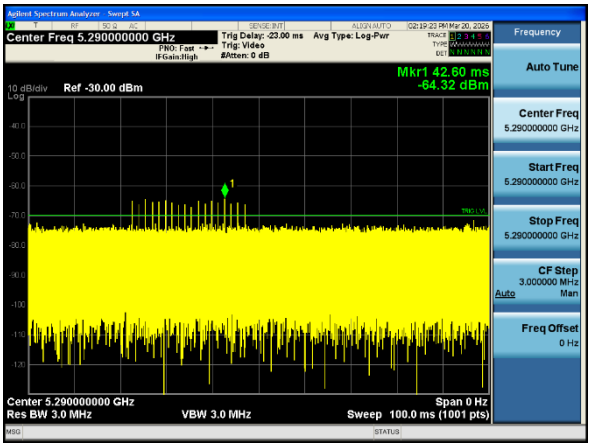	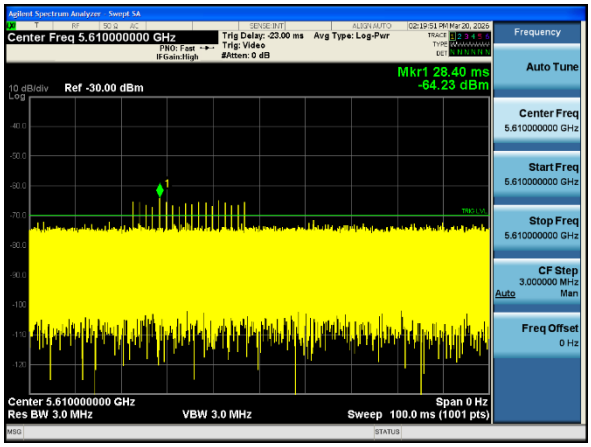

This report shall not be reproduced except in full, without the written approval of Eurofins TA Technology (Shanghai) Co., Ltd.

6.2. Channel Move Time, Channel Closing Transmission Time and Non-Occupancy Period

Timing plot

Bandwidth 80MHz
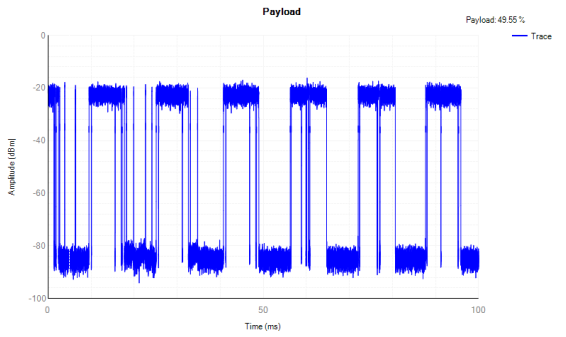
Duty Cycle (%): 49.55

Channel Move Time & Channel Closing Transmission Time

Central Frequency: 5290 MHz	Central Frequency: 5610 MHz
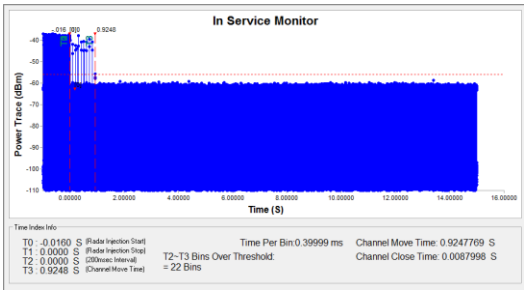	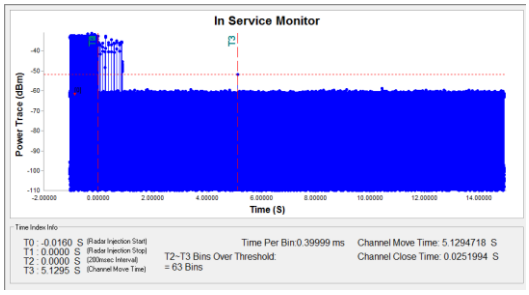
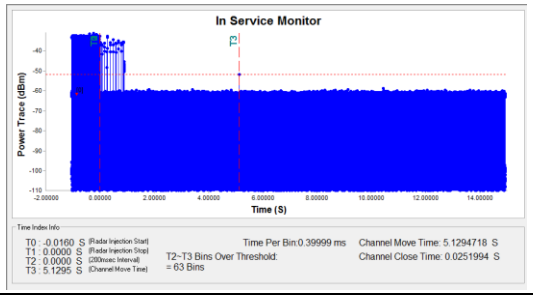	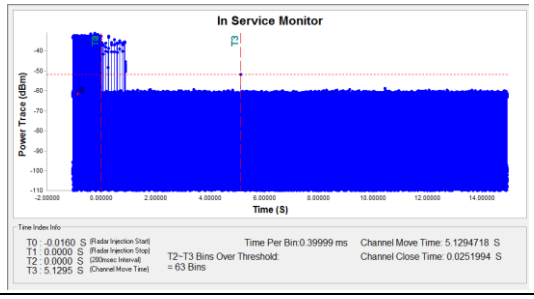

This report shall not be reproduced except in full, without the written approval of Eurofins TA Technology (Shanghai) Co., Ltd.

Non-Occupancy Period

Central Frequency: 5290 MHz	Central Frequency: 5610 MHz
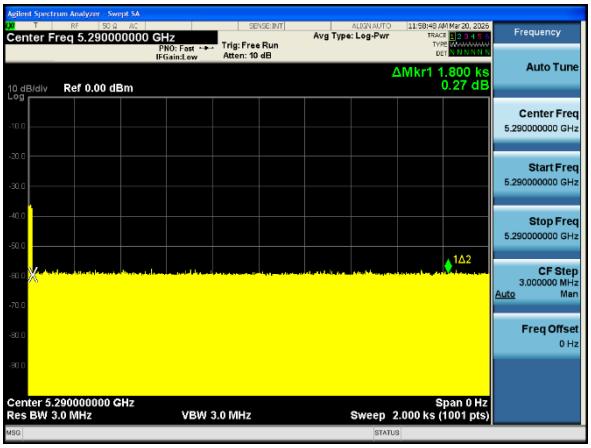	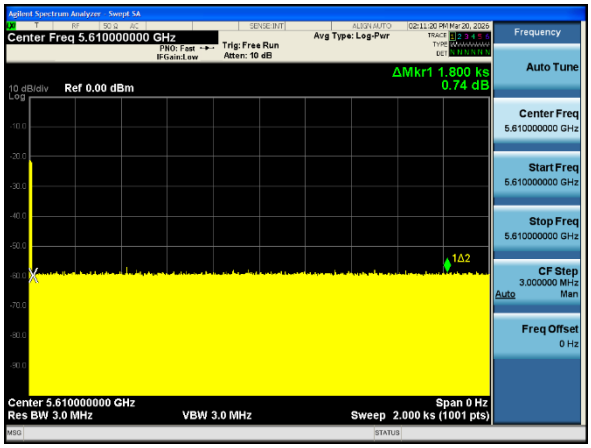

This report shall not be reproduced except in full, without the written approval of Eurofins TA Technology (Shanghai) Co., Ltd.

6. Main Test Instruments

Name	Manufacturer	Type	Serial Number	Calibration Date	Expiration Date
Vector Signal Generator	KEYSIGHT	N5172B	MY53050900	2025-11-24	2026-11-23
Spectrum Analyzer	Agilent	N9010A	MY50210259	2025-11-24	2026-11-23
Wireless Router	ASUS	AXE11000	GT-AXE11000 (FCC ID: MSQ-RTAXJF00)	/	/
Splitter	UCL Microwave	UCL-PD0512-2S	190411001	/	/
Splitter	UCL Microwave	UCL-PD0512-2S	190411002	/	/
RF Cable	Agilent	SMA 15cm	0001	/	/
RF Cable	Agilent	SMA 15cm	0002	/	/
RF Cable	Agilent	SMA 15cm	0003	/	/
RF Cable	Agilent	SMA 15cm	0004	/	/

This report shall not be reproduced except in full, without the written approval of Eurofins TA Technology (Shanghai) Co., Ltd.

7. The EUT Appearance

Refer to *EUT Appearance*.

This report shall not be reproduced except in full, without the written approval of Eurofins TA Technology (Shanghai) Co., Ltd.

8. Test Setup Photos

Refer to *DFS Test Setup.*

******** END OF REPORT ********

This report shall not be reproduced except in full, without the written approval of Eurofins TA Technology (Shanghai) Co., Ltd.