CRAIG®

INTERCEPTOR
with Camera

Owner's Manual

PLEASE READ BEFORE OPERATING THIS EQUIPMENT.

Model: CRT728C

FCC INFORMATION:

This equipment has been tested and found to comply with the limits for a Class B digital device, pursuant to part 15 of the FCC Rules. These limits are designed to provide residential protection against harmful interference in a residential installation. This equipment generates, uses and can radiate radio frequency energy and, if not installed and used in accordance with the instructions, may cause harmful interference to radio communications. However, there is no guarantee that interference will not occur in a particular installation. If this equipment does cause harmful interference to radio or television reception. which can be determined by turning the equipment off and on, the user is encouraged to try to correct the interference by one or more of the following measures:

- Reorient or relocate the receiving antenna.
- Increase the separation between the equipment and receiver.
- Connect the equipment into an outlet on the circuit different from that to which the receiver is connected.
- Consult the dealer or an experienced radio/TV technician for help.

FCC WARNING:

The equipment may generate or use radio frequency energy. Changes or modifications to this equipment may cause harmful interference unless the modifications are expressly approved in the instruction manual. Modifications not authorized by the manufacturer may void user's authority to operate this device.

GENERAL WARNINGS:

1. **Important Instructions:**
   - This product is suitable for 14 years old and above. Please read the instruction manual before you play with this product.
2. **Make sure the unit always within the Radio Frequency control range. Otherwise, the unit will out of control and may crash.**
3. **Safety Instructions:**
   - **Keep away from the objects and crowds.**
     - The unit is flying at high speed; keep it away from crowds, buildings, high voltage wires, etc.
     - Do not operate this unit in bad weather.
   - **Keep away from water and rain.**
     - The unit has electronic and mechanical parts which may be damaged by water and rain.
   - **Keep away from the working unit.**
     - The blades are turning in high speed, always keep away from it.

LOCATION OF CONTROLS:

Main Unit:

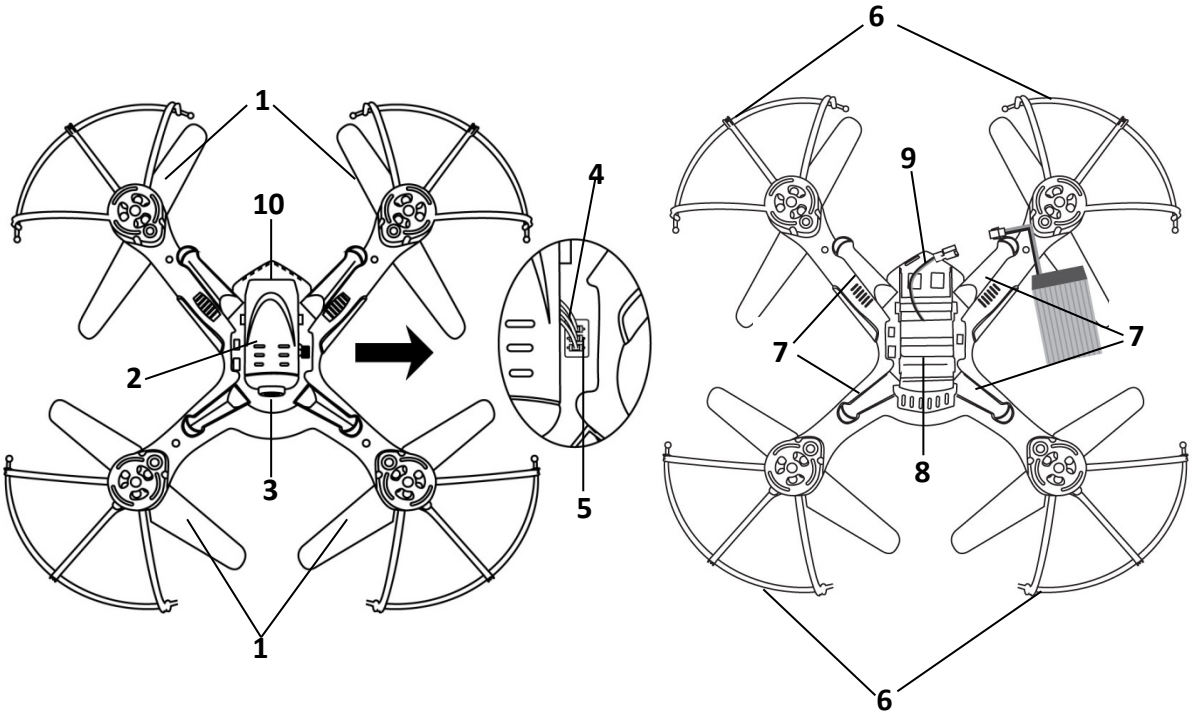

1. Blades
2. Camera Module/Battery Door
3. Camera
4. Connection Cable of Camera
5. Connection Jack of Camera
6. Blade’s Protectors
7. Landing Gears
8. Battery Compartment
9. Battery Connection Cable/Jack
10. Micro SD Card Slot

REMOTE CONTROL:

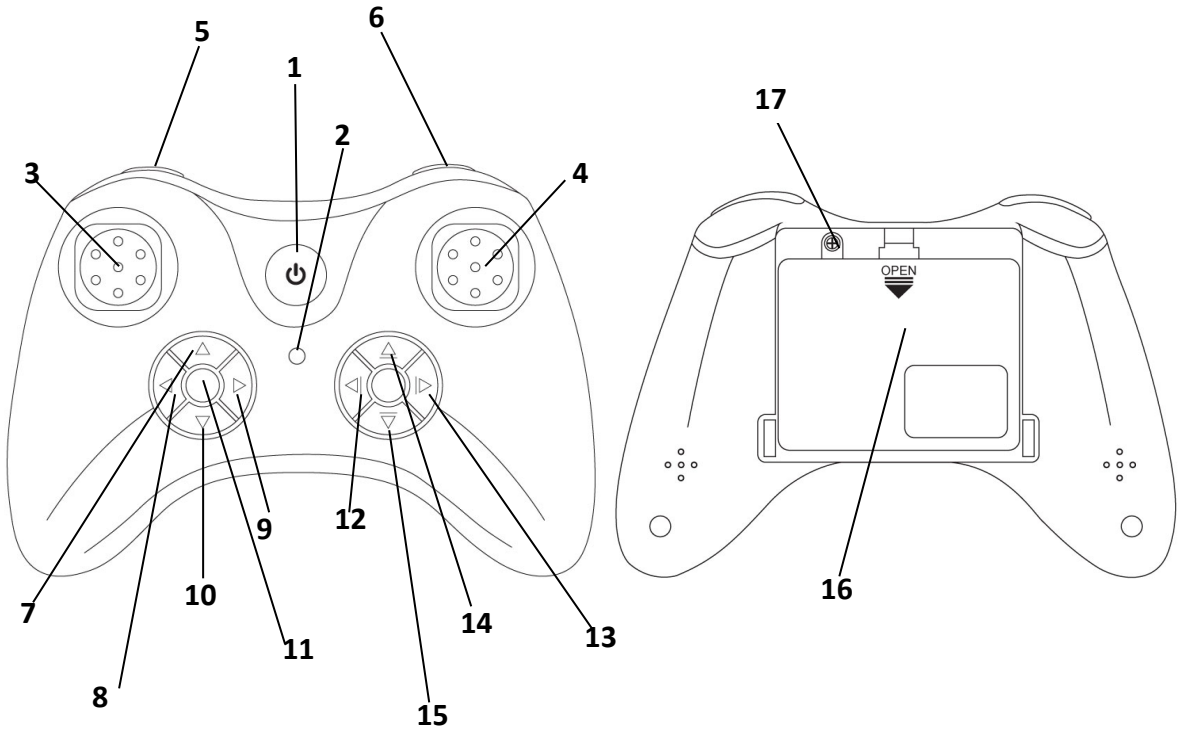

1. ⏻ Power On/Off Button
2. Power On Indicator
3. Left Joystick/One Key Take Off - Landing Button
4. Right Joystick/One Key Emergency Stop Button
5. Headless - One Key Return Button
6. 3D Rolling Button
7. Speed Selection Button
8. Counterclockwise Fly Trimmer
9. Clockwise Fly Trimmer
10. Video Recording Button
11. Photo Capture Button
12. Left Fly Trimmer
13. Right Fly Trimmer
14. Forward Fly Trimmer
15. Backward Fly Trimmer
16. Battery Door (On the rear)
17. Security Screw of Battery Door

PREPARATIONS:

Assembly the Landing Gears to the Main Unit:

The unit has 4 Landing Gears, insert it to the corresponding mounting holes on the unit before use as illustrated below:

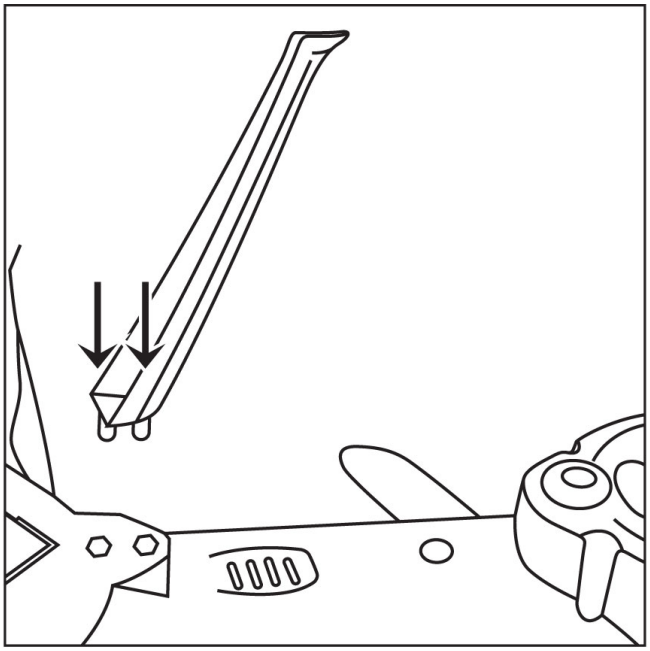

Battery Recharging:

The unit has a DC 3.7V Li-ion rechargeable battery. Recharge it before first time use or when it is drained as follows:

1. Connect the small plug from the supplied USB Connect Cable to the jack from the Battery Connection Cable.
2. Connect the full size USB plug from the cable to the USB Port on Personal Computer or USB Charger (Computer and USB Charger not included) as illustrated below:
3. Charging will automatically start. The Red Charging Indicator Inside the full size USB Plug will illuminate. When finished charging, the indicator will turn off.

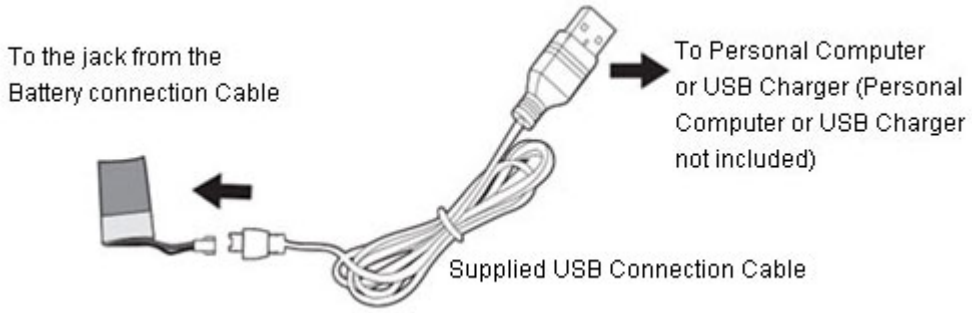

BATTERY INSTALLATION:

Main Unit:

1. Open the Camera Module/Battery Door by slide it out then lift up as Fig 1 below.
2. Connect the Connection Plug from the Battery to the Battery Connection Jack from the unit as the Fig 2 below.
3. Install the battery into the battery compartment.
4. Close the Camera Module/Battery Door.

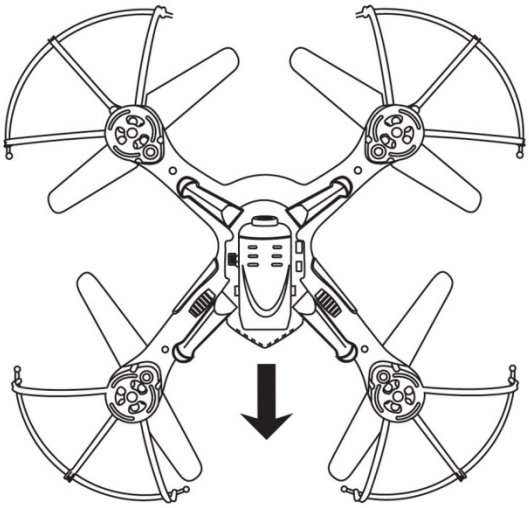

Fig 1

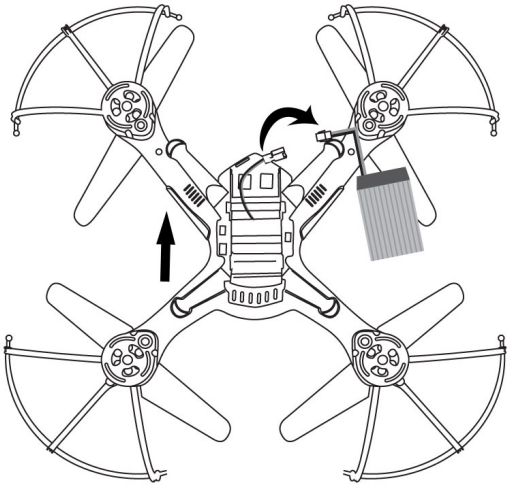

Fig 2

Notes:

Your battery will last longer if you're following these simple guidelines for caring and storing:

A. Before first time use, charge it approximately 1.5 Hours until the battery is fully charged.

B. Recharge and store the unit within the temperature range of 5°C~35°C (40°F~95°F).

C. Do not charge longer than 24 hours. Excessive charging or running the unit until battery fully drains will damage battery. Battery life will be extended if you keep the battery fully charged.

D. Battery life naturally shortens slowly over time.

Remote Control:

1. Looser the screw on the Battery Door by a screwdriver (not included) as Fig 1.
2. Press the tab then lift it up to open it as Fig 2.
3. Install or replace the batteries by three (3) AA size batteries (not included) into the battery compartment as the polarity markings in it as Fig 3. (Alkaline batteries are recommend for longest playing time).
4. Closed the battery door.
5. Tighten the screw on the door.

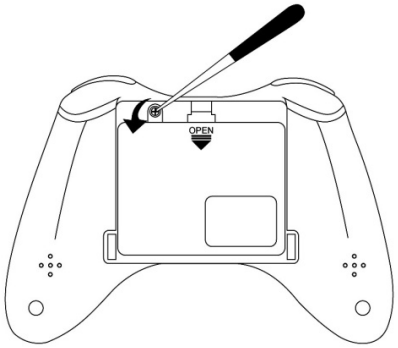

Fig 1

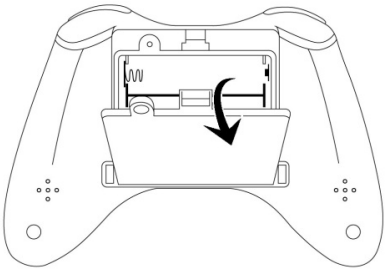

Fig 2

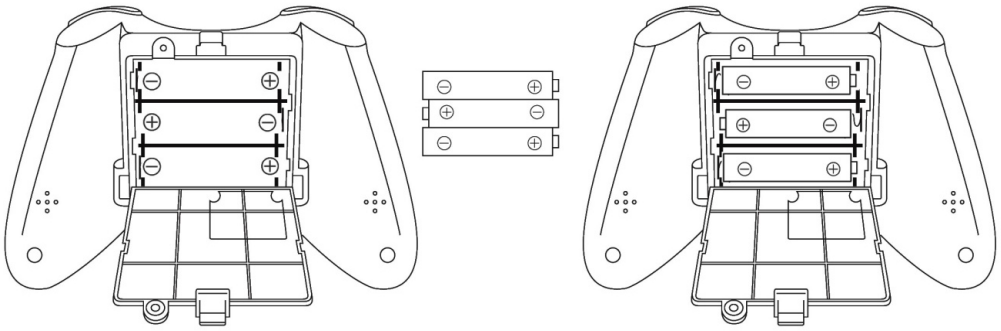

Fig 3

Battery Precautions:

Follow these precautions when using a battery in this device:

1. Using only the size and type of battery specified.
2. Be sure to follow the correct polarity when installing the battery as indicated in the battery compartment. A reversed battery may cause damage to device.
3. Do not mix different types of batteries together (e.g. Carbon-zinc, Alkaline) or old batteries with fresh ones.
4. If the batteries in the device are consumed or the device is not to be used for a long period of time, remove the batteries to prevent damage or injury from possible battery leakage.
5. Do not try to recharge the battery after fully charged, it can overheat and rupture. (Follow battery manufacturer's instructions.)
6. Do not dispose of battery in fire. Battery may explodes or leak.
7. Clean the battery contacts and also those of the device prior to battery installation.

MICRO SD CARD INSTALLATION:

The unit is support to take photos/videos then store in a Micro SD Card (not included).

Insert a Micro SD Card into the Micro SD Card Slot with contact fingers face to bottom side as the illustrated below:

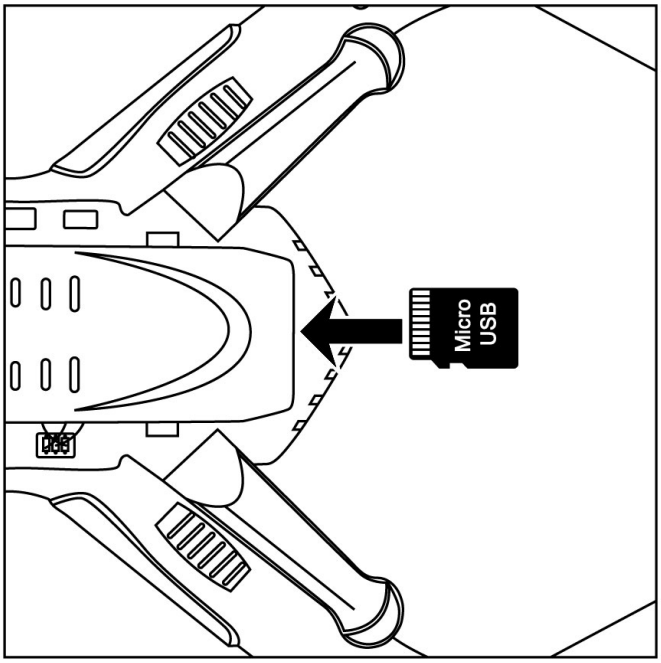

Notes:

A. Insert the class 4 (or up) Micro SD Card (Up to 32GB) into the Micro SD Card Slot with contact fingers face to bottom side. When inserting the storage card, make sure the direction you selected is correct. Never insert violently to avoid damaging the card or the unit. If it doesn't work, please check if the direction is correct.

B. To take out the card, press the card until a "Click" sound is heard then pull out the card.

C. Before insert or replace the storage card, make sure the unit is in powered off mode (The battery had not connection).

D. When the card is first time use, or it has been used in other device. Format it through the computer before install to the unit..

(Important: After format, all record in the memory card will be erased. Upload the record to the computer before format.)

OPERATION

1. Insert the Micro SD Card into the unit as previously instructed.
2. Recharge the supplied rechargeable battery and install it into the unit as previously instructed. The decorative LED lights on the unit will illuminate and blink.
3. Place the unit on a horizontal place.
4. Install the batteries to the Remote Control as the previous procedures. Press the ⏻ Power On/Off Button to turn on the Remote Control. The Power On Indicator will illuminate and blink.

5. Slide the Left Joystick upward; then downward; then release it immediately to pairing the Remote Control to the unit. When paired, the Power ON Indicator on the Remote Control and the decorative LED lights on the unit will stop blinking. Then:
   A. Slide the Left Joystick upward twice to start flying and rising. Or, press the center of Left Joystick (One Key Take-off/Landing Button) to start flying immediately.
   B. Slide the Left Joystick upward again to rise.
   C. Slide the Left Joystick downward to reduce the height or landing.
   D. To landing and stop flying, slide the Left Joystick downward and hold. The unit will landing and the Blades will stop turning.
      Or, press the center of Left Joystick (One Key Take-off/Landing Button) to landing.
      To stop flying emergency, release the Left Joystick then press the center of Right Joystick (One Key Emergency Stop Button). The blades will stop turning immediately.
   E. Slide the Left Joystick to left to turns the unit counterclockwise.
   F. Slide the Left Joystick to right to turns the unit clockwise.
   G. Slide the Right Joystick upward to fly to forward.
   H. Slide the Right Joystick downward to fly to backward.
   I. Slide the Right Joystick to left to fly to left.
   J. Slide the Right Joystick to right to fly to right.
   K. Press the Headless/One Key Return Button once to enter to the Headless mode. The unit will automatically identify where the front of is. Then slide the Right Joystick upward to fly the unit to it. Press the Button again to resume normal control.
   L. Press and hold the Headless/One Key Return Button to enter to the One Key Return mode. The unit will fly to the start flying position automatically.
   M. During flying, press the 3D Rolling Button to roll the unit.
   N. Press the Left /Right Fly Trimmer (Direction ◀ and ▶ buttons on right) repeatedly to fine tune the Joystick's control of Left/Right flying.
   O. Press the Forward/Backward Fly Trimmer (Direction ▲ and ▼ buttons on right) repeatedly to fine tune the Joystick's control of Forward/Backward flying.
   P. During flying, press the Speed Button (Direction ◀ button on left) repeatedly to adjust the speed as desired.
   Q. During flying, press the Photo Capture Button (● button on left) to take photo.
   R. During flying, long press the Video Recording Button (Direction ▼ button on left) to start video recording, long press again to stop recording. Press and release the button to turn off the Landing lights, press and release again to turn it on.
   S. Press the Counterclockwise/Clockwise Fly Trimmer (Direction ◀ and ▶ buttons on right) repeatedly to fine tune the Joystick's control of Counterclockwise/Clockwise flying.
   T. During flying, slide the Left Joystick Upward/Downward to define the height of unit. Then release the Left Joystick to stop rising. Slide the Left Joystick Upward/Downward again to resume normal control.

6. To shut off the unit (or take out the battery to recharge), landing it and wait the blades completely stop turning as instructed earlier. Open the Camera Module/Battery Door then disconnect the Battery from the Battery Connecting Plug.
7. To shut off the Remote Control, press the ⏻ Power On/Off Button to turn off the Remote Control. The Power Indicator will not light.

GYRO RESET

If the motion and/or control of the unit become unstable after impact. You may need to reset the built-in Gyro Sensor as follows:

1. Pairing the Remote Control to the unit as previous procedures.
2. Press and hold the Photo Capture Button (● button on left) until the decorative LED lights on the unit stop blinking, then release the button.

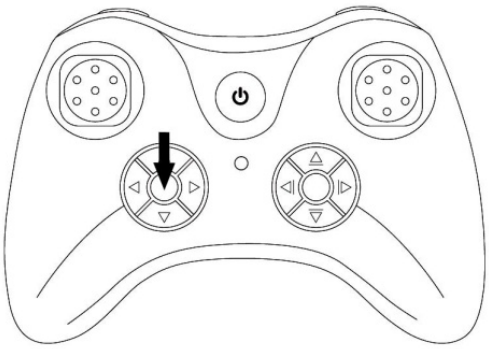

BLADE(S) REPLACEMENT:

If any blade was damaged or deformed, replace it by the supplied same color of spare blade with the supplied screwdriver as illustrated below:

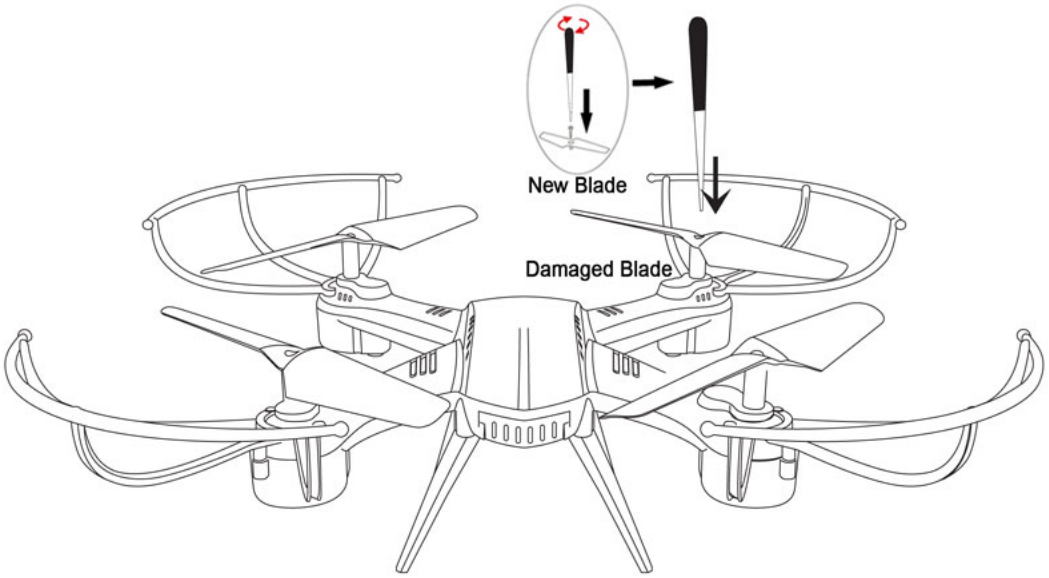

Note: Always replace the damaged blade by the same color of blade. Otherwise, the motion of the unit will become abnormal.

TROUBLE SHOOTING:

SYMPTOM:	POSSIBLE CAUSE	POSSIBLE SOLUTION
Remote Control not functioning	The batteries are drained.	Replace by new batteries.
	Batteries wrong installed.	Reinstall the batteries as the polarity marking inside the battery compartment.
The unit not workable	The battery had not connected to the unit	Connect the battery to the unit as the “PREPARATIONS” section on page 5.
	The battery drained.	Recharge the built-in battery as the “PREPARATION” section on page 4.
	The unit had not paired to the Remote Control.	Pair the unit to the Remote Control as “OPERATION” section on page 7 - 8 point 2 - 5.
The blade still running after landing	The unit had not completely landing and stop running.	Landing and wait the blades stop running as page 8 point D
Control abnormal or motion unstable	One (or more than one) blade(s) deformed or damaged.	Check and replace the deformed/damaged blade(s) by new one.
The unit can not moving straightly or auto turning		Reset the built-in Gygo as page 9 Or, fine turn the trimmers as page 8 point N - O
Camera not functioning	Micro SD Card had not installed	Install a Micro SD Card (not included) as page 7
	Camera had not connected to the unit	Connected the connection cable from camera to the unit as the illustrated below: 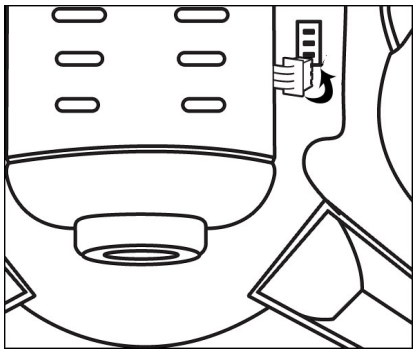

General Specification:

Power Source:

Unit:..... Supplied DC⎓3.7V, 380mAh (1.406WH) Li-ion rechargeable battery. Recharge by DC⎓5V

Remote Control:.....DC⎓4.5V, 3 x AA Size Batteries (Not Included).

Effective range of Radio Control:.....Up to 100 feet in open area

Radio Frequency:..... 2.4GHz

Sensor of Camera:.....300k Pixels

Capture Modes:

Photo: 640 x 480 pixels in JEPG

Video: 640 x 480 pixels, 30fps in AVI

Package Includes:

1 x Owner's Manual

1 x Remote Control

1 x DC⎓3.7V, 380mAh (1.406WH) Li-ion rechargeable battery(Already placed into the battery compartment on the unit)

1 x USB Charging Cable (For charging only)

4 x Spare Blades

1 x Screwdriver

4 x Plastic Landing Gears

The specifications and accessories are subject to change without notice.

LIMITED WARRANTY

Craig warrants this product to be free from manufacturing defects in material and workmanship under normal use for a period of 90 days from date of purchase. If service is required, please return the product to the store where it was purchased for exchange; or, pack the unit in the original packing material with all accessories if applicable, a copy of your sales receipt and a Cashier's check or Money Order for $12.00 (to cover shipping and handling costs) payable to Craig Electronics Inc. For consumers in Canada, please make sure that the cashier check or money order is redeemable through a U.S. bank. Ship your product freight pre-paid. Your unit will be repaired, replaced or if the unit can not be repaired or replaced, a refund will be forwarded to you within four weeks of receipt of your unit. Please ship your unit to:

Craig Electronics Inc.
1160 NW 163 Drive
Miami, Fl 33169

This warranty is void if the product has been: a) Used in a commercial application or rental. b) Damaged through misuse, negligence, or abuse. c) Modified or repaired by anyone other than an authorized Craig service center. d) Damaged because it is improperly connected to any other equipment.
Note: This warranty does not cover: a) Ordinary adjustments as outlined in the Owner's Manual which can be performed by the customer. b) Damage to equipment not properly connected to the product. c) Any cost incurred in shipping the product for repair. d) Damage to the product not used in the USA.

This warranty is not transferable and only applies to the original purchase. Any implied warranties, including the warranty of merchantability, are limited in duration to the period of this expressed warranty and no warranty whether expressed or implied shall apply to the product thereafter.

Under no circumstance shall Craig be liable for any loss or consequential damage arising out of the use of this product. This warranty gives specific legal rights. However, you may have other rights which may vary from state to state. Some states do not allow limitations on implied warranties or exclusion of consequential damage. Therefore, these restrictions may not apply to you.

To Obtain Service on your Product
email:service@craigelectronics.com

Printed in China CRT728_WC_E0YT1_B0US

Instruction Manual Addendum Sheet

FCC ID Warning

Warning: Changes or modifications to this unit not expressly approved by the party responsible for compliance could void the user's authority to operate the equipment.

NOTE: This equipment has been tested and found to comply with the limits for a Class B digital device, pursuant to Part 15 of the FCC Rules. These limits are designed to provide reasonable protection against harmful interference in a residential installation. This equipment generates, uses and can radiate radio frequency energy and, if not installed and used in accordance with the instructions, may cause harmful interference to radio communications. However, there is no guarantee that interference will not occur in a particular installation. If this equipment does cause harmful interference to radio or television reception, which can be determined by turning the equipment off and on, the user is encouraged to try to correct the interference by one or more of the following measures:

- Reorient or relocate the receiving antenna.
- Increase the separation between the equipment and receiver.
- Connect the equipment into an outlet on a circuit different from that to which the receiver is connected.
- Consult the dealer or an experienced radio/TV technician for help.

This device complies with Part 15 of the FCC Rules. Operation is subject to the following two conditions : (1) this device may not cause harmful interference, and (2) this device must accept any interference received, including interference that may cause undesired operation.

Shielded cables must be used with this unit to ensure compliance with the Class B FCC limits.

FCC RF Radiation Exposure Statement Caution: To maintain compliance with the FCC's RF exposure guidelines, place the product at least 20cm from nearby persons.

The device must not be co-located or operating in conjunction with any other antenna or transmitter.