Smart Bolt Elite Max

Manufactured by Kwikset

Installation Manual

Rev 1.0

Manager Features

- Works with Rently's Self-Guided Touring platform and Smart Home ecosystem
- Integrates with property management software (Yardi, RealPage, Entrata) for easy resident move-ins and move-outs
- Manage hundreds of locks using a single login
- Bluetooth or Z-Wave® and cloud-controlled with no need for Wi-Fi
- Easy to install, includes all required hardware

Renter Features

- 20 months battery life with jump-startability to prevent lockouts
- Unlock via code, fob, or App
- Residents can issue durational codes for their guests
- Residents easily manage their lock with the Rently Smart Home App

NOTE: The battery life is based on 10 entries per day. However, misaligned doors will shorten the battery life since the motor uses more power

This manual will walk you through all the required steps to add your new Rently Smart Bolt Elite Max to your door.

Installation

Before Installation

WARING: Do not insert the batteries into the lock until it is fully installed. Doing so may damage the lock.

1. Check the parts in the box

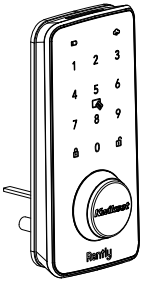

Exterior Lock

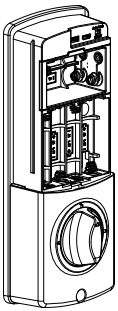

Interior Lock

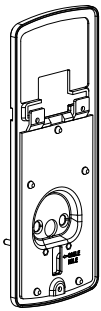

Mounting Plate

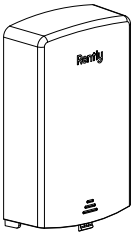

Battery Cover

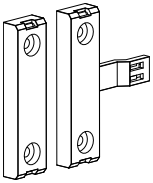

Door Sensor

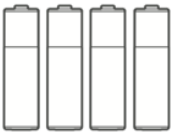

8 AA Batteries

Keys

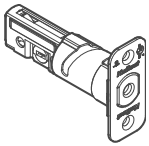

Latch

Collar

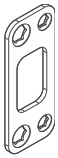

Strike

Fob x 2

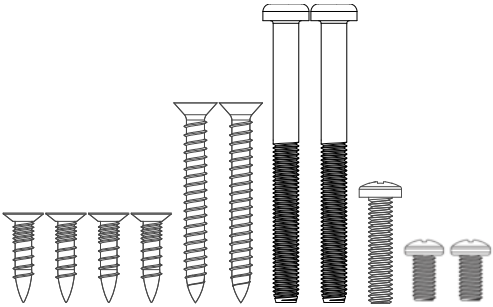

Screws

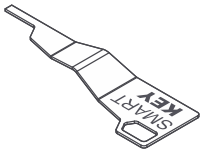

Smartkey Tool

Manual

2. Required tools

You will need a Phillips head screwdriver. If using an electric screwdriver, we recommend that you adjust it to the lowest torque to avoid stripping the screws

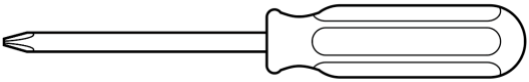

3. Remove your existing deadbolt and strike

Installation Instructions

1. Install the Latch

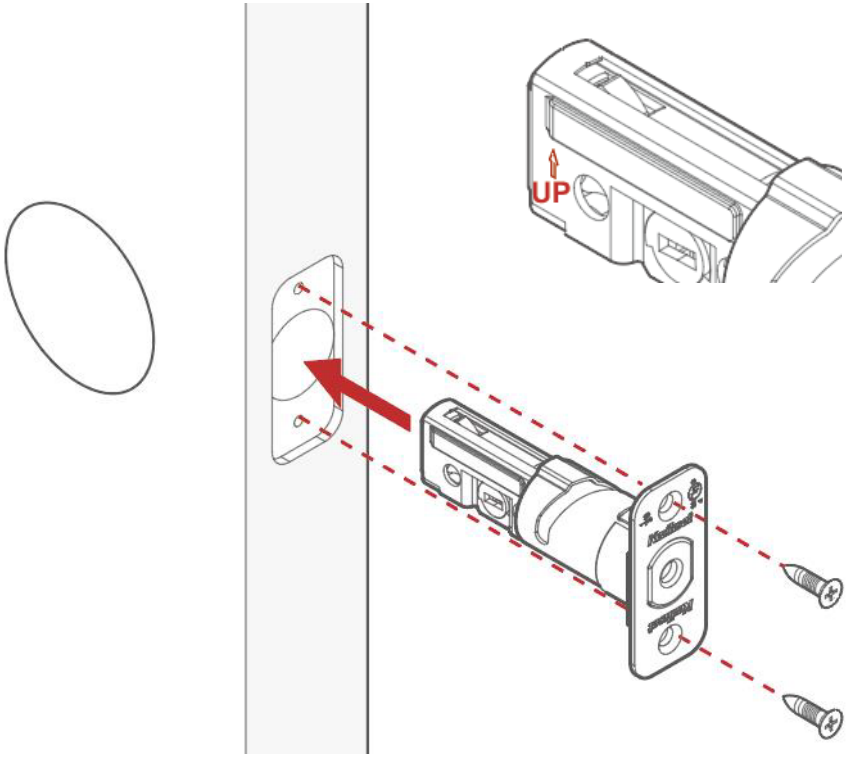

If the rectangle shaped hole is not centered in the door hole, rotate the latch face to extend the latch.

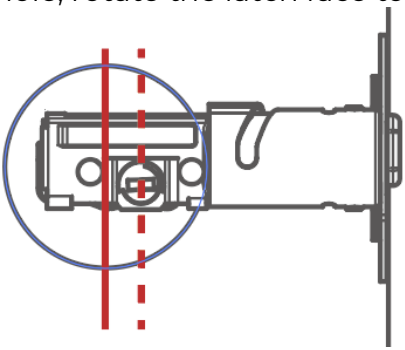

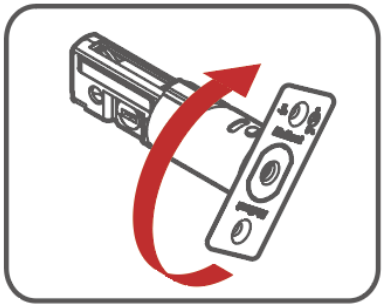

If your door is not chiseled, install the drive-in collar.

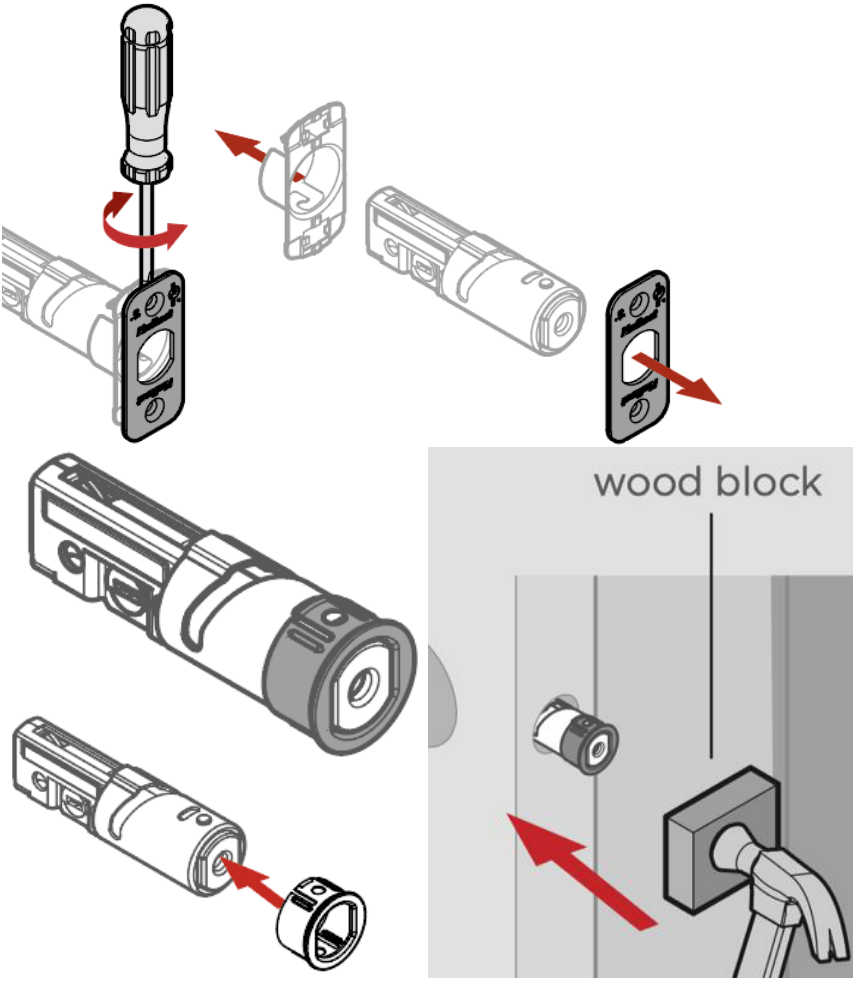

2. Install the strike

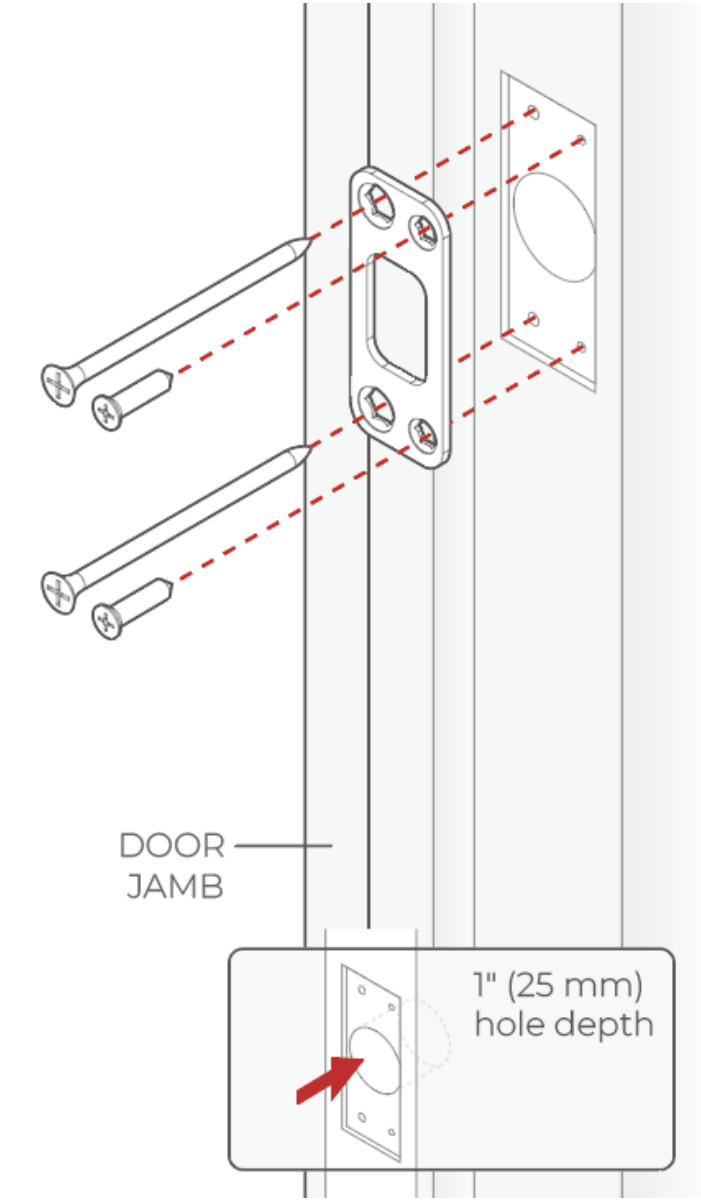

3. Install the Exterior Lock

Arrange the corresponding rubber gaskets to be fully seated against the back of the keypad and the back of the mounting bracket. Feed the keypad wire under the latch, then through the cable hole in the mounting bracket.

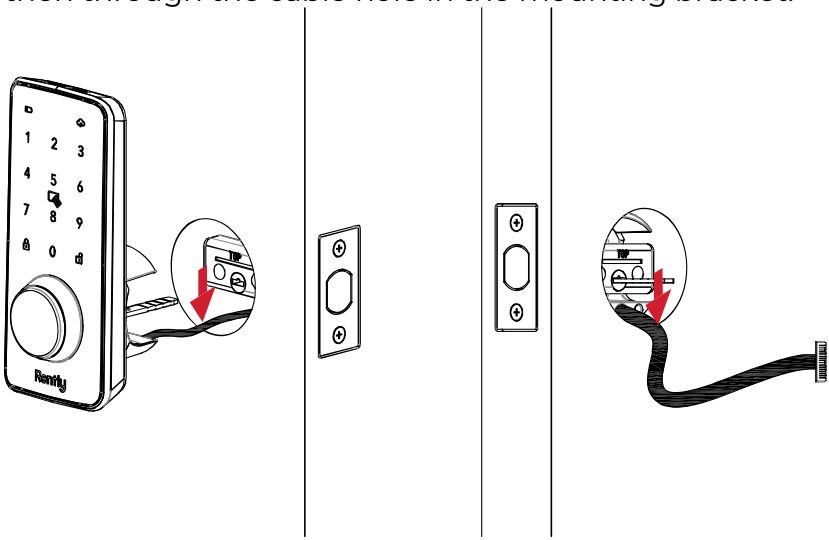

Route the cable under the latch

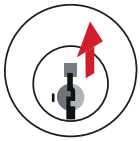

Make sure the keyhole is in the vertical position and pointing up

4. Install the mounting plate and door sensor

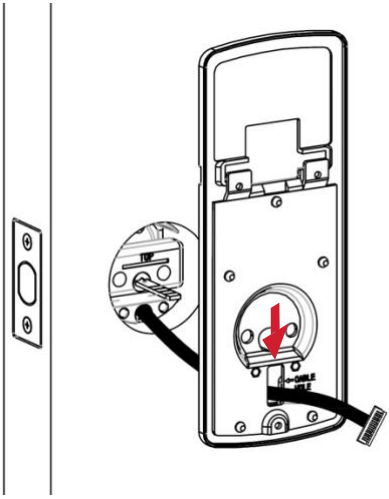

Route the cable through the bottom hole of the mounting plate

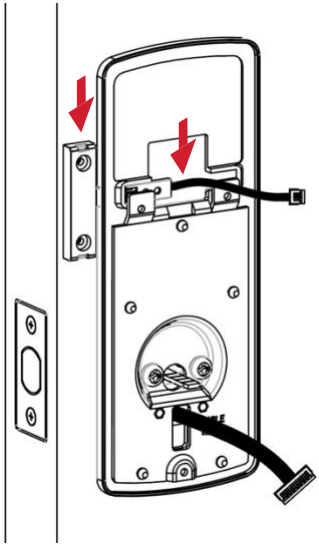

Mount the door sensor next to the edge of the door,
Route the cable through hole of the rubber pad.

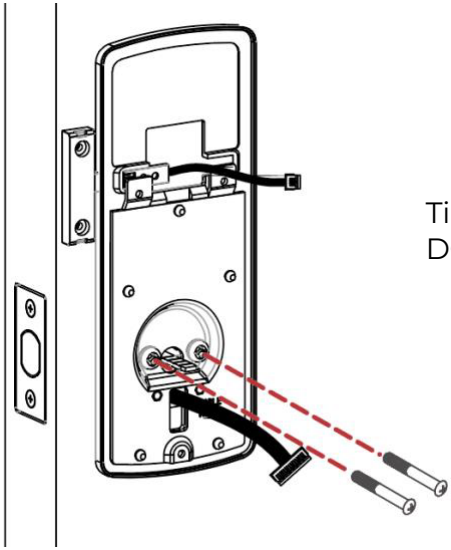

Tighten the screws evenly.
DO NOT over-tighten.

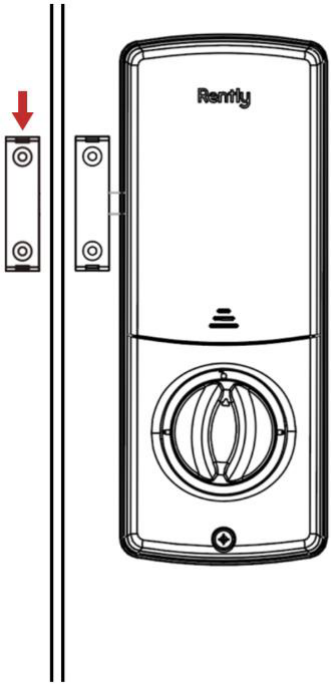

Mount another part of the door sensor next to the edge of the door frame, for optimal performance, it should be mounted within 1.5" from the edge of your door frame, and align with the sensor on the door (if you are installing one)

5. Install the interior Lock

Keep the interior lock knob to pointing up.
Connect the keypad cable and the door sensor cable to the interior lock by firmly snapping the connectors together.

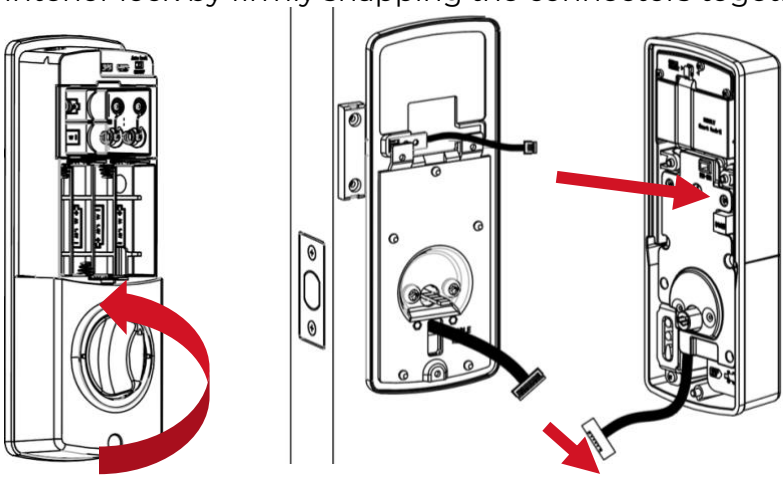

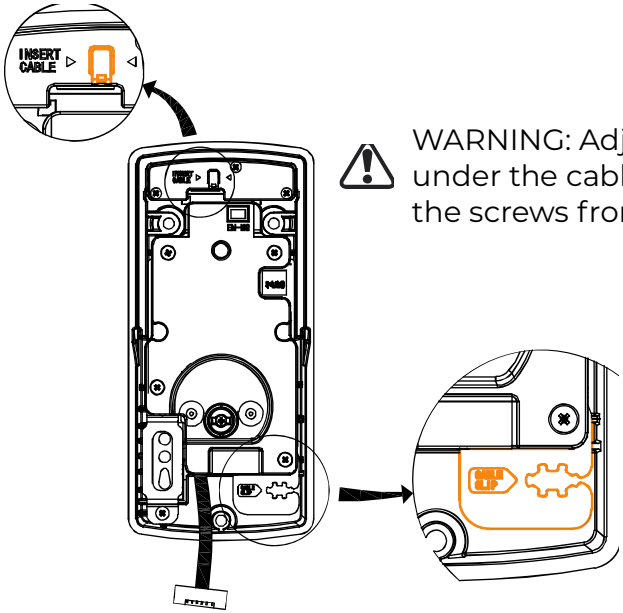

WARNING: Adjust the cable under the cable clip to prevent the screws from pinching it.

Secure the interior lock onto the mounting plate.

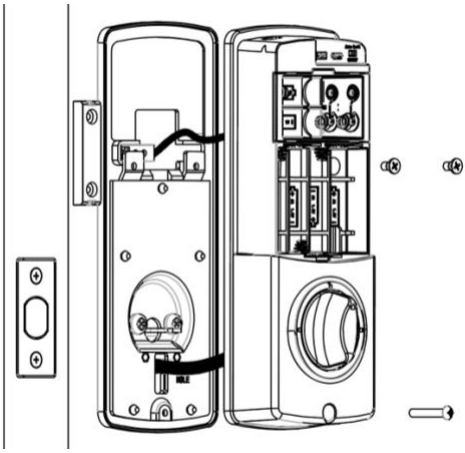

Rotate the deadbolt knob by hand to be sure that it moves freely and that the screws are not overtightened.

6. Install the AA batteries

Ensure the door is open while installing batteries.

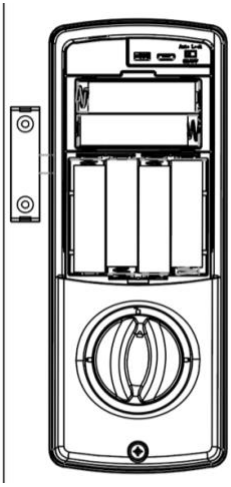

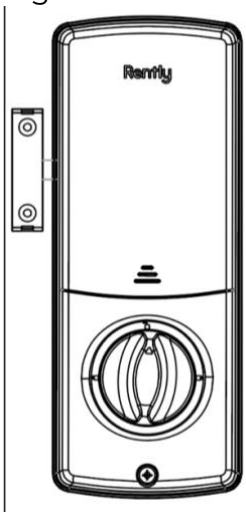

Ensure correct polarity. Use new, non-rechargeable Alkaline batteries only.

Reference Guide

A user code must be created before you can lock or unlock the door.

1. **Low Battery indicator**
   This indicator will turn on when battery is low.

2. **Number buttons**
   Used to enter User Codes, touch with figure to wake up.

3. **Fob reader**
   Swipe the Fob card close to this icon.

4. **Lock button**
   Used for locking the door.

5. **Smartkey Cylinder**
   Kwikset rekeyable cylinder.

6. **Z-Wave® connection indicator**
   Not added to Z-Wave® network: Red
   Added to Z-Wave® network: Green

7. **Unlock button**
   Used for unlocking the door.

8. **Auto Lock switch**
   Enable / Disable Auto Lock feature when a door sensor is installed.

9. **Turn piece**
   Lock and unlock from the interior.

Inclusion / Exclusion

On factory default the device does not belong to any Z-Wave® network. The device needs to be **added to an existing Z-Wave® network** to communicate with the devices of this network. This process is called **Inclusion**.
Devices can also be removed from a Z-Wave® network. This process is called **Exclusion**.

1. Download and install Rently Smart Home App by scan the QR code below:

2. Follow the in-app instructions to **Inclusion** (Add) the Smart Bolt Elite to a Z-Wave® network.
3. Go to **Settings** of the Smart Bolt Elite on the App, follow the in-app instructions to do **Exclusion** (Remove) or **Reset network**.

Lock / Unlock the door

Locking

To lock your door, press the Lock button. The lock will beep as the bolt extends.

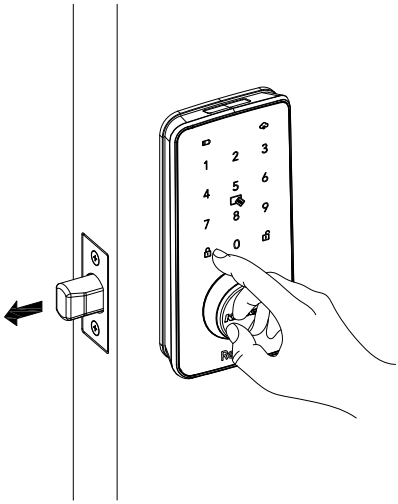

Unlocking

To unlock your door, enter the User Code, present the User Fob, use the physical key or unlock via Rently Smart Home App. The lock will beep as the bolt retracts

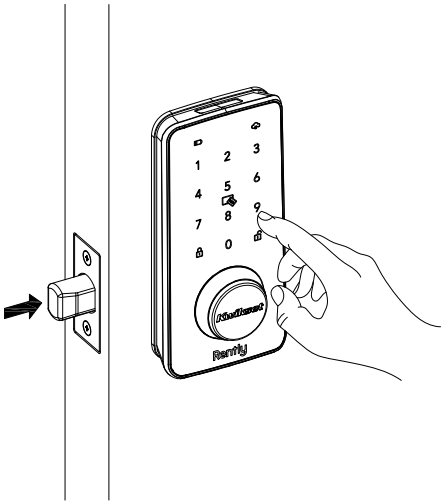

SmartKey® Re-key

Re-key the lock to work with your existing key by following the **SmartKey® Re-key instructions.**
NOTE: If Auto-Lock is enabled, remove the battery pack before re-keying your lock

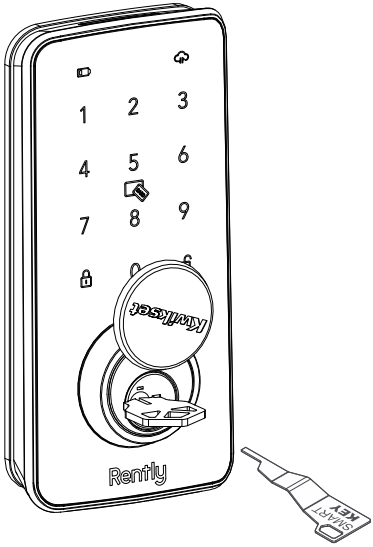

Troubleshooting

If you have any issues, please visit our support center:
https://help.rently.com/
Or call us at (855)-248-8144
For assistance setting up the Smart Bolt in the Rently Manager Portal, please see the **Rently Help Center** or scan the QR code below:

Regulatory Compliance

FCC

This device complies with part 15 of the FCC Rules. Operation is subject to the following two conditions: (1) This device may not cause harmful interference, and (2) this device must accept any interference received, including interference that may cause undesired operation.

Note: This equipment has been tested and found to comply with the limits for a Class B digital device, pursuant to part 15 of the FCC Rules. These limits are designed to provide reasonable protection against harmful interference in a residential installation. This equipment generates, uses and can radiate radio frequency energy and, if not installed and used in accordance with the instructions, may cause harmful interference to radio communications. However, there is no guarantee that interference will not occur in a particular installation. If this equipment does cause harmful interference to radio or television reception, which can be determined by turning the equipment off and on, the user is encouraged to try to correct the interference by one or more of the following measures:

- Reorient or relocate the receiving antenna.
- Increase the separation between the equipment and receiver.
- Connect the equipment into an outlet on a circuit different from that to which the receiver is connected.
- Consult the dealer or an experienced radio/TV technician for help.

Note: The Grantee is not responsible for any changes or modifications not expressly approved by the party responsible for compliance. such modifications could void the user's authority to operate the equipment.

The device has been evaluated to meet general RF exposure requirement. To maintain compliance with FCC's RF exposure guidelines, the distance must be at least 20 cm between the radiator and your body, and fully supported by the operating and installation configurations of the transmitter and its antenna(s).

Technical Specifications

Dimensions:	8'' x 5'' x 3.25''
Protocol:	Bluetooth BLE, Z-Wave®, NFC
Devices:	iOS and Android
Compatibility:	1 3/8'' to 2'' door thickness
Handing:	Self-handing
Power:	8 AA Batteries
Codes:	Supports up to 250 unique codes and 250 Fobs
Operating Temp:	Exterior: -30˚C to 75˚C Interior: 25˚C to 70˚C
Certification:	FCC Part 15 CA65 ANSI/BHMA 156.36 Grade 2 UL10C Fire rating 90 minutes Z-Wave®

Rently