Rently

Access Panel 3

Installation Manual

INDEX

Smart Access Control System

Introduction 3

Access Panel Installation

Prior to Installation 4
Access Panel Specifications 5
Access Panel Installation 6
Exit Button Installation 7
Power Supply Installation 8

Lock Type Installation

Electromagnetic Lock 9
Electric Strike 13

Wiring Diagrams

Electromagnetic Lock 18
Electric Strike 19
24V Lock 20

Installation Test 21

Signal Strength Graph 22

FCC Warning 23

Introduction

The Rently Access Panel 3 is a cloud-based access panel that can be used to easily track, change, and manage FOB and door code credentials. The Access Panel 3 can be used to control any access device that is operated by a normally open or normally closed signal as long as the voltage requirements are met. NOTE: this system only supports Mifare FOBs and does not integrate with HID FOBS.

The Rently Access Panel 3 stores all valid credentials within the device. It contains a Bluetooth antenna that connects to a cloud-enabled hub installed nearby. This allows you to place secure access points all over a building without having to wire a central control system.

General Install Location

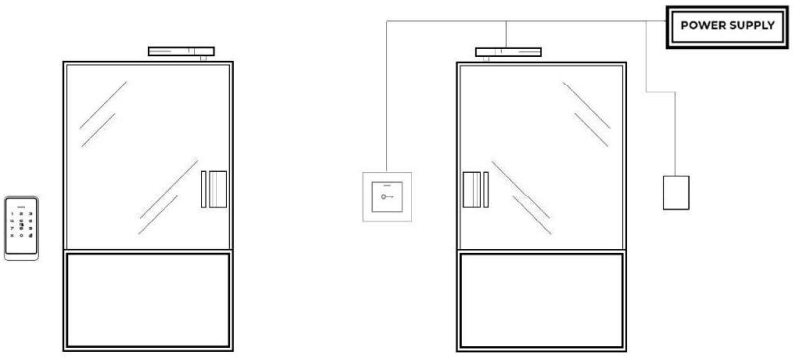

Outside View **Inside View**

Prior to Installation

- Check that all components are available
  - Rently Access Panel 3
  - Screw on co-ax antenna (4 in and 6 ft antennas provided)
  - Exit Button
  - Power Supply Controller
  - Rently Hub
  - Wall anchors or other mounting hardware
  - Your preferred lock type including but not limited to:
    - Electromagnetic Lock and lock bracket
    - Electric Strike Lock
    - Electric Bolt Lock
    - Electric Cabinet Lock
- NOTE: This is a kit, and not all components will be used. Please recycle parts that are not necessary for your application.

- Prepare the following tools. NOTE: additional tools may be required for your specific application:
  - Hammer
  - Drill
  - Drill Bit Set
  - Screwdriver Set
- Identify the door type and verify that you have the correct mounting bracket and hardware for the install.
- Locate the power source for the power supply controller. NOTE: You may need to have a certified electrician run power to the install location.
- To ensure the best performance, check to make sure your Rently Hub is installed in an optimal location within 10 feet of your Access Panel with minimal obstructions.
- ADA considerations:
  - The Exit Button and the Rently Access Panel 3 should be installed in accordance with your local ADA requirements. Recommended height does NOT guarantee ADA compliance.

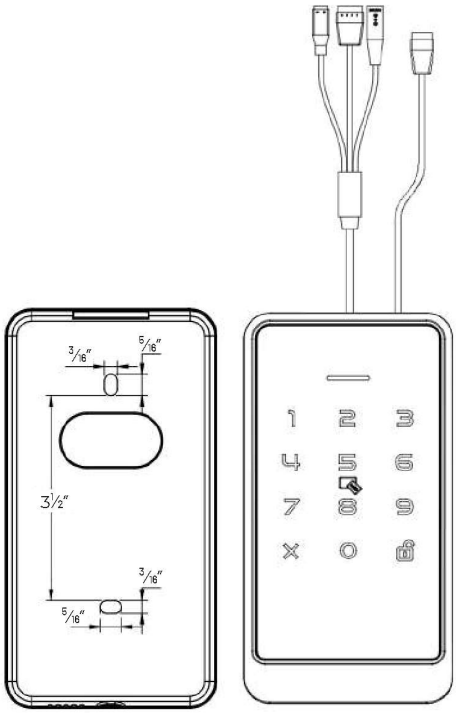

Access Panel Specifications

Dimensions	80 x 150 x 28mm (3.1 x 5.9 x 1.1in)
Weight	738.5g (1.63lb)
Power Supply	12V/24V AC, 12V/24V DC
Output Mode	Normally Open/Normally Closed
Quiescent Current	≤ 25mA
NFC Induction Distance	≤ 1.5mm (0.06in)
Maximum Current	300mA
Wireless Connections	Bluetooth 4.0, NFC
Code and FOB Capacity	2000
Operating temperature	-30 to 70°C (-22 to 158°F)
Card Type	CPU Card, IC Card
Operating Humidity	0 to 95% (RH)

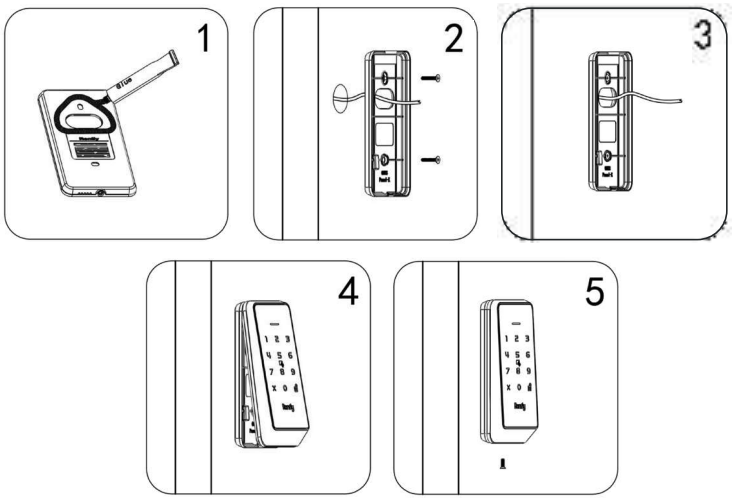

Access Panel Installation

1. Run a power cable to the location where the Rently Access Panel 3 will be mounted. Remove the security screw from the bottom of the Access Panel 3 with the wrench that is provided and take off the mounting plate. Apply a bead of silicone around the area shown before mounting the plate to the wall.
2. Insert the power and control cables through the mounting plate.
3. Press the mounting plate firmly against the mounting surface and secure with screws.
4. Connect the power and control cables from the Access Panel 3 according to the appropriate wiring diagram (see page 20).
5. Connect the antenna by screwing on the co-ax cable. If the hub is nearby, you may use the 4 in antenna and tuck it into the wall. If a stronger signal is required, the 6 ft antenna should be mounted in a location free from large metal obstructions , including wire mesh used for stucco.
6. Hook the top edge of the Access Panel 3 on the mounting plate and swing the panel in until fully seated. Secure in place with the security screw and provided wrench.
   NOTE: Stow the provided security tool in an accessible location for future service. A 6-lobe with center pin tamper resistant screw driver may be used if needed.

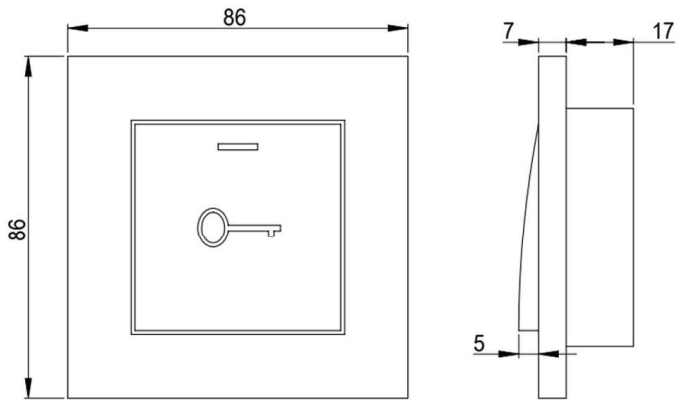

Exit Button Specifications

Size	86 x 86 x 40mm (3.4 x 3.4 x 1.6in)
Weight	180g (0.4lb)
Mechanical Life	500,000 presses
Install Location	Hollow wall or door
Operating Temperature	-30°C to 70°C (-22°F to 158°F)
Operating Humidity	0~95% (relative humidity)
Panel Material	PC
Current Rating	16A@250V
Output Contact	NO/COM

Exit Button Installation

1. Connect the wires per the wiring diagram section.
2. Pry the plastic faceplate away from the switch body.
3. Tuck the wires into the wall to sit behind the switch.
4. Secure the switch to the desired location using two screws.
5. Snap the faceplate back into position with a firm press. Be sure all the corners snap back into place.

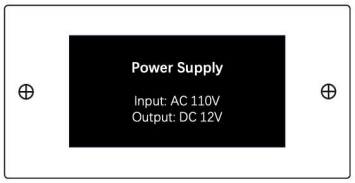

Power Supply Controller Specifications

The power supply controller is used to control electric locks by switching the AC 110V input to DC 12V output. It can also reduce overload to the controller, change the electric lock to on or off mode, adjust the open delay time and control the open key.

Dimensions	180 x 78 x 65mm (7 x 3 x 2.5 in)
Weight	1250g (2.75lb)
Input	110V AC 50Hz
Output	12V DC 2A
Operating Humidity	30 to 95% (RH)
Ambient Temperature	-20 to 55°C (-4 to 122°F)

Power Supply Controller Installation

1. Remove 2 silver screws on the front side of the power supply controller to remove the cover.

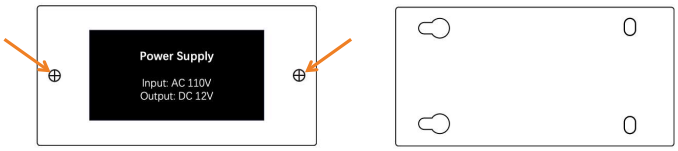

2. Mount the power supply to a flush surface (e.g., mounted against the wall) by 2 or 4 screws on the bottom plate depending on how the power supply controller will be oriented.
3. Wiring the Power Supply Controller with AC input and DC outputs refer to the wiring diagram section for connections.

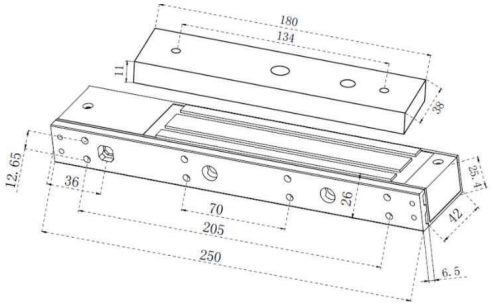

Electromagnetic Lock Specifications

This type of lock may be used on wood, glass, metal, and fireproof doors. Several brackets are available to accomodate many different types of doors. See diagrams for additional details.

Dimension	LxHxD: 250x42x25.4 (mm)
Armature Plate	LxWxH: 180x38x11 (mm)
Holding Force	600 lbs
Input Voltage	12 VDC
Current Draw	370mA (±10%) @12 VDC
Input Power	4.5W
Temperature	-10~+55℃ (14-131F)
Environment	In door use only
Weight	1.85KG

Electromagnetic Lock Installation

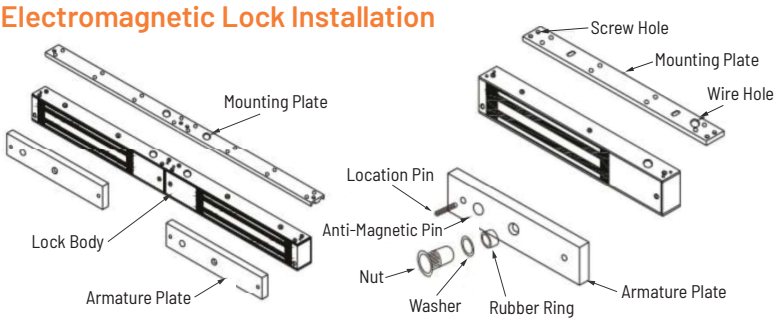

Double Door **Single Door**

1. Optional Bracket: Identify the door swinging direction and inspect the door frame header to determine if bracket is required. AL-bracket, LZ-bracket or U-bracket maybe required.

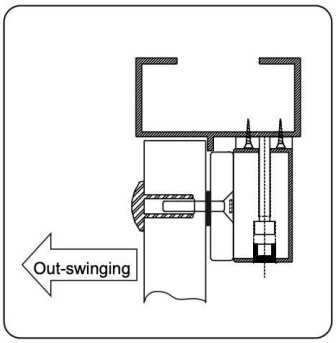

Regular Installation

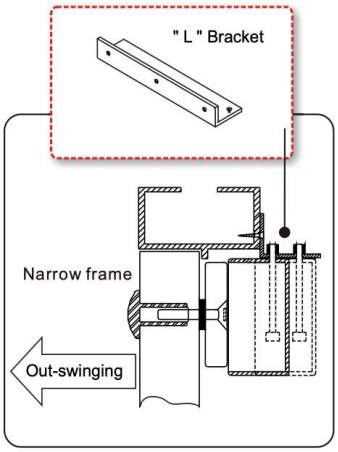

L-Bracket for narrow door frames

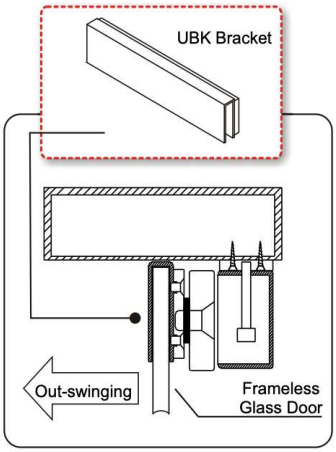

U-Bracket for frameless glass door leaf

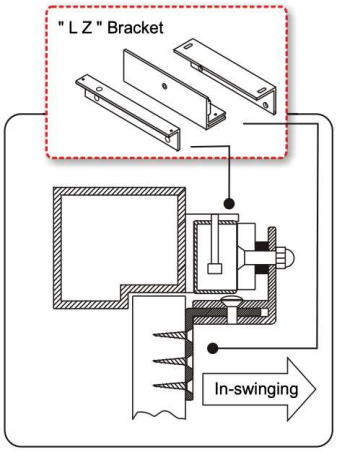

LZ-Bracket for in-swinging door frames

2. Regular Installation

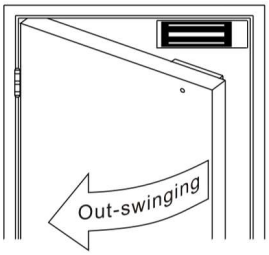

2.1 Remove the Mounting Plate from the Lock body.

1. Remove the screw holding the cover in place, and then remove the cover.

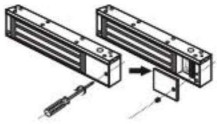

2. Unscrew the bolts underneath with the hex key.

3. Use the hex key again to loosen the mounting plate screws.

4. Unfold the mounting plate from the lock body.

2.2 Use the template provided to determine the correct location and size of the mounting holes for both the door and frame header. Ensure that the door opens away from the Maglock. In the case of a single door, the Maglock should be positioned as close as possible to the vertical section of the door jamb. Drill the door and frame as indicated.

2.3 Loosely install the mounting plate using two of the supplied Philips head mounting screws in the elongated slots. Attach the Maglock to the mounting plate.

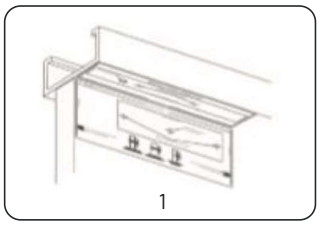
1

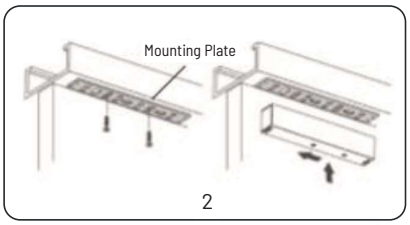

2

2.4 Using the components shown in the image to the right, mount the armature to the door. Make sure that the armature plate is not overtightened and that it is installed as shown in the following diagram. The armature plate must be free to self-align with the door.

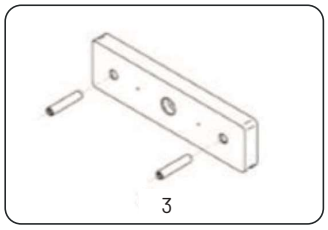
3

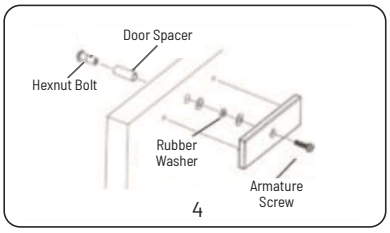

4

2.5 Ensure the armature and magnet are aligned. Adjust the mounting plate and the drill the appropriately sized holes in the door header for the remaining screws.

2.6 Close the door to test the holding force. The angle between the armature plate and magnetic look can be adjusted by adding or reducing washers.

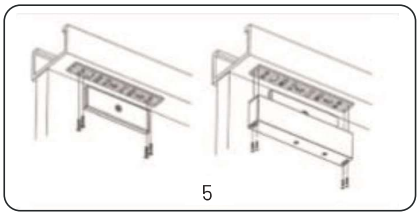
5

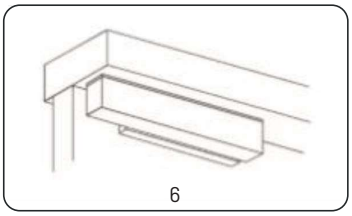
6

2.7 If the door gap is too big, put the paper shim inside, adjust the gap to 2mm between the brackets, then fix with screws.

2.8 Turn on the power and test the locks to ensure they are working properly

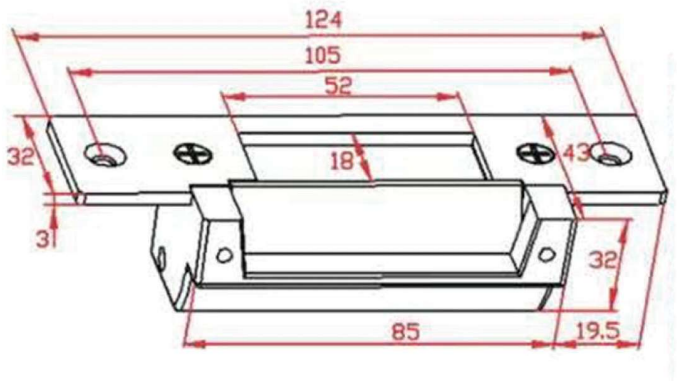

Electric Strike Specifications

Dimensions	4.9x1.7x1.26 in (124x43x32mm)
Voltage	12VDC
Current	210mA
Security type	Fail safe (NC), Fail secure (NO)
Input wires	Red: V+ Black: V-

Electric Strike Installation

1. To enable the Electric Strike to be located in the door frame, first mark the position of the door latch front face on the door frame with the door in the closed position.

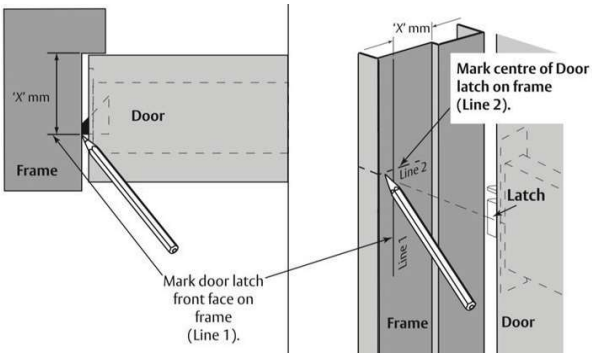

2. Mount the power supply to a flush surface (e.g., mounted against the wall) by 2 or 4 screws on the bottom plate depending on how the power supply controller will be oriented.

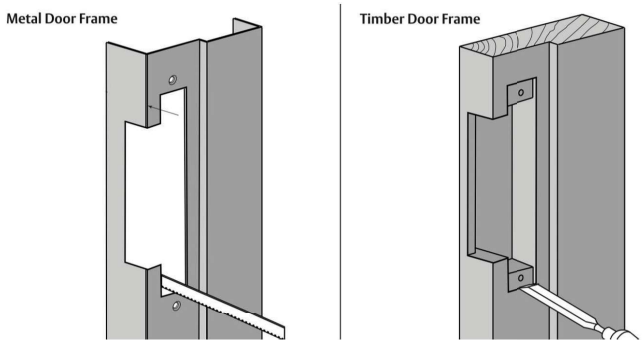

3. Run the wires through the door frame and to the Electric Strike.
4. Refer to the wiring diagram section for Electric Strike wiring.
5. Secure the Electric Strike using the screws provided.

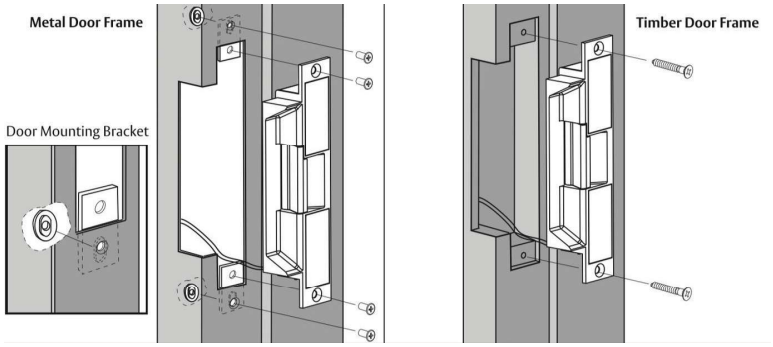

6. If the door frame is too thick, please use the extension plate.

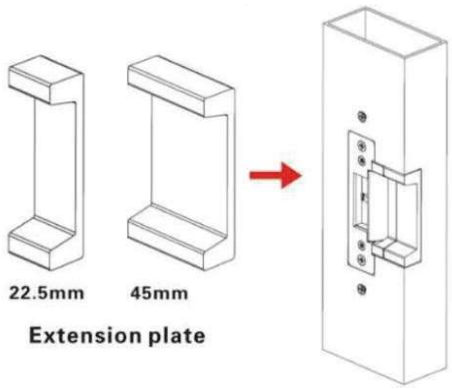

7. Check both mechanical and electronic operations work correctly

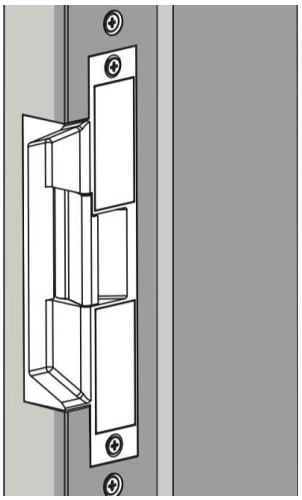

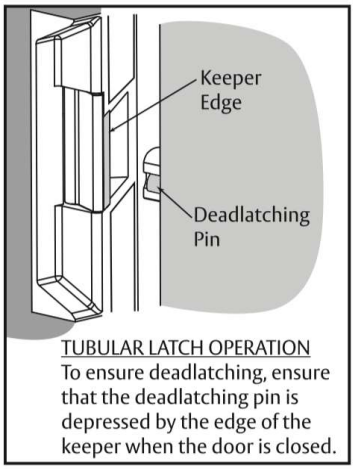

TUBULAR LATCH OPERATION
To ensure deadlatching, ensure that the deadlatching pin is depressed by the edge of the keeper when the door is closed.

8. The American Standard Electric Strike is normally set to a fail-safe configuration but may be manually configured to fail-secure by following these steps.

1. Remove the screw "B".

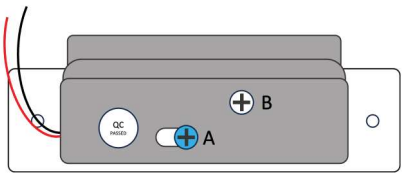

2. Slightly loosen the screw "A" but don't unscrew it.

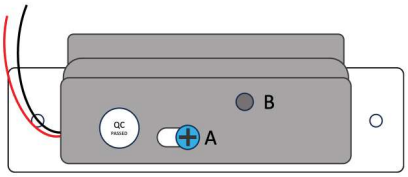

3. Slide the screw to left/right to switch between Fail-Secure and Fail-Safe mode.

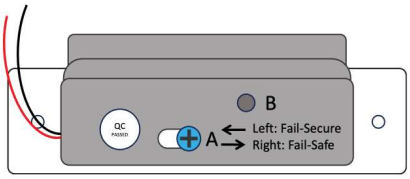

4. Put the screw "B" back on, then tighten screw "A".

Fail-Secure: The screw on the left side.

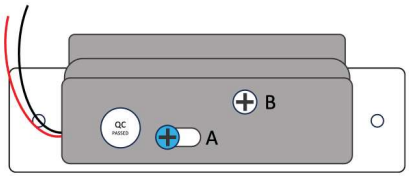

Fail-Safe: The screw on the right side.

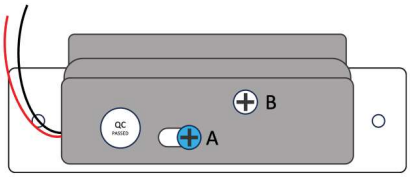

NOTE: Please refer to your local building codes and property requirements for appropriate fail-safe and fail-secure wiring.

Scenario A: Electromagnetic Lock (Fail-Safe)
Scenario B: Electric Strike (Fail-Safe)
Scenario C: Electric Strike (Fail-Secure)
Scenario D: Fail-Safe 24V Lock
Scenario E: Fail-Secure 24V Lock

Scenario A: Electromagnetic Lock (Fail-Safe)

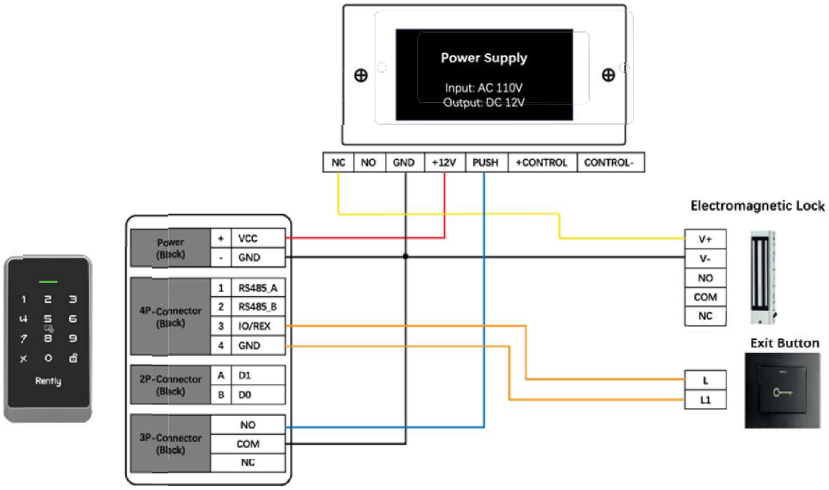

Scenario B: Electric Strike (Fail-Safe)

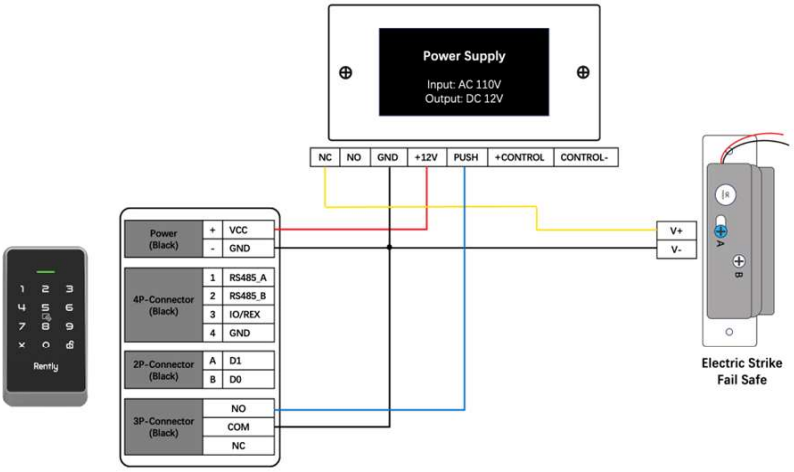

Scenario C: Electric Strike (Fail-Secure)

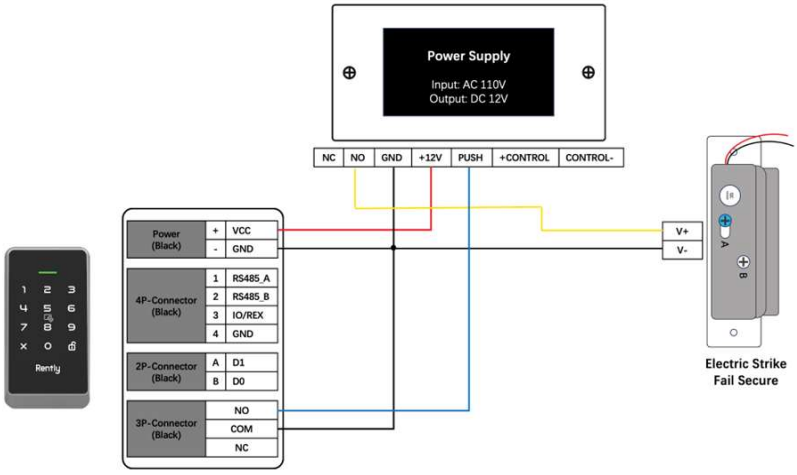

Scenario D: Fail-Safe 24V Lock

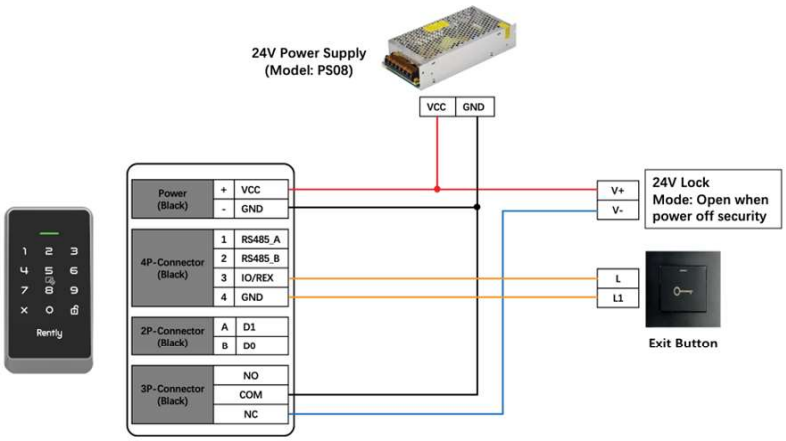

Note: Be sure the rating of the Lock shall be < 35V/1.0A

Scenario E: Fail-Secure 24V Lock

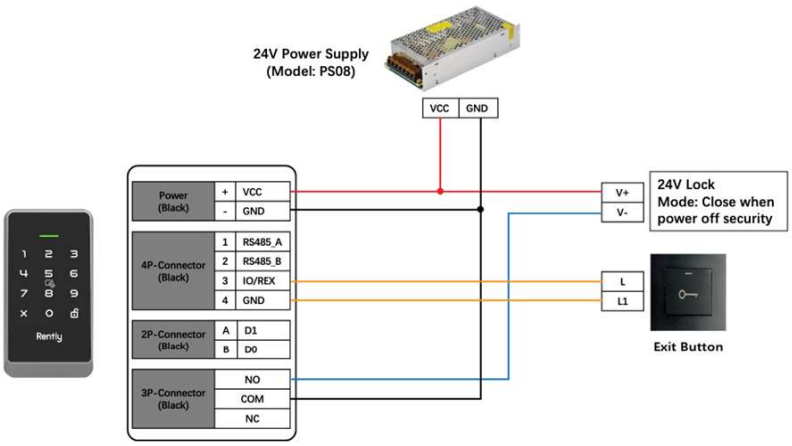

Note: Be sure the rating of the Lock shall be < 35V/1.0A

With the components installed and wired, please carry out this simple test to ensure that the Rently smart access control system was installed correctly and is fully functional.

To ensure that the wiring was done correctly, please press the exit button to see if the lock releases for a few seconds.

If the test fails, please reexamine the installation and wiring of the Rently smart access control system.

If the test is successful, please install and power on your Rently Hub. The hub will automatically connect to the Rently smart access control system when powered on.

Once the light on the back of the hub is solid blue, you are all set.

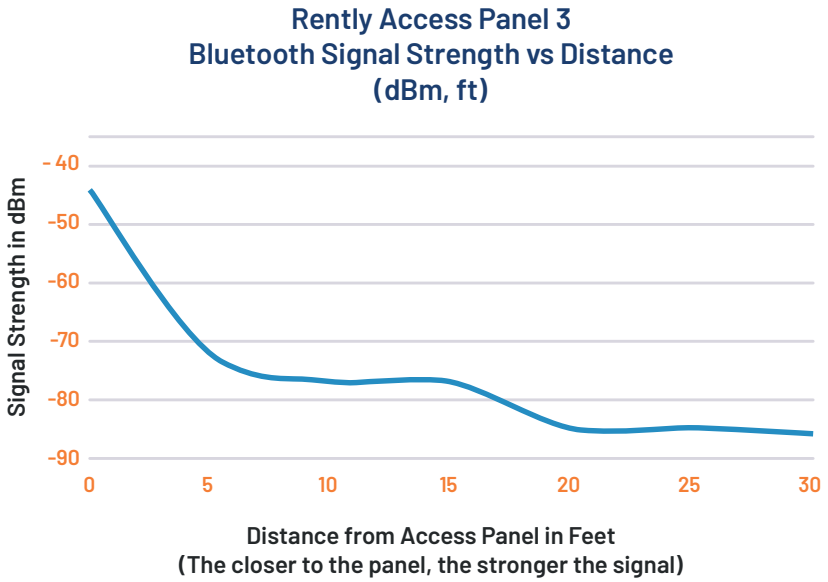
Rently Access Panel 3
Bluetooth Signal Strength vs Distance
(dBm, ft)
Signal Strength in dBm
- 40
-50
-60
-70
-80
-90
0
5
10
15
20
25
30
Distance from Access Panel in Feet
(The closer to the panel, the stronger the signal)

FCC WARNING
This device complies with part 15 of the FCC Rules. Operation is subject to the following two conditions: (1) This device may not cause harmful interference, and (2) this device must accept any interference received, including interference that may cause undesired operation.
Note: This equipment has been tested and found to comply with the limits for a Class B digital device, pursuant to part 15 of the FCC Rules. These limits are designed to provide reasonable protection against harmful interference in a residential installation. This equipment generates, uses and can radiate radio frequency energy and, if not installed and used in accordance with the instructions, may cause harmful interference to radio communications. However, there is no guarantee that interference will not occur in a particular installation. If this equipment does cause harmful interference to radio or television reception, which can be determined by turning the equipment off and on, the user is encouraged to try to correct the interference by one or
more of the following measures:

- Reorient or relocate the receiving antenna.
- Increase the separation between the equipment and receiver.
- Connect the equipment into an outlet on a circuit different from that to which the receiver
  is connected.
- Consult the dealer or an experienced radio/TV technician for help.

Note: The Grantee is not responsible for any changes or modifications not expressly approved by the party responsible for compliance. Such modifications could void the user's authority to operate the equipment.
The device has been evaluated to meet general RF exposure requirement.
To maintain compliance with FCC's RF exposure guidelines, the distance must be at least 20 cm between the radiator and your body, and fully supported by the operating and installation configurations of the transmitter and its antenna(s).

FCC ID: 2AH4J-PANEL343

Rently

For more information on how to set up manager and resident access, please scan the QR code or reach us at:

(855)-248-8144
techsupport@rently.com