PowerLogic™ Intuitive PM7100 / PM7200 / PM7300 series

User Manual

7EN02-0489-00
08/2026

Legal Information

The information provided in this document contains general descriptions, technical characteristics and/or recommendations related to products/solutions.

This document is not intended as a substitute for a detailed study or operational and site-specific development or schematic plan. It is not to be used for determining suitability or reliability of the products/solutions for specific user applications. It is the duty of any such user to perform or have any professional expert of its choice (integrator, specifier or the like) perform the appropriate and comprehensive risk analysis, evaluation and testing of the products/solutions with respect to the relevant specific application or use thereof.

The Schneider Electric brand and any trademarks of Schneider Electric and its subsidiaries referred to in this document are the property of Schneider Electric or its subsidiaries. All other brands may be trademarks of their respective owner.

This document and its content are protected under applicable copyright laws and provided for informative use only. No part of this document may be reproduced or transmitted in any form or by any means (electronic, mechanical, photocopying, recording, or otherwise), for any purpose, without the prior written permission of Schneider Electric.

Schneider Electric does not grant any right or license for commercial use of the document or its content, except for a non-exclusive and personal license to consult it on an "as is" basis.

Electrical equipment should be installed, operated, serviced, and maintained only by qualified personnel. No responsibility is assumed by Schneider Electric for any consequences arising out of the use of this material.

Schneider Electric reserves the right to make changes or updates with respect to or in the content of this document or the format thereof, at any time without notice.

To the extent permitted by applicable law, no responsibility or liability is assumed by Schneider Electric and its subsidiaries for any errors or omissions in the informational content of this document, as well as any non-intended use or misuse of the content thereof.

Safety information

Important information

Read these instructions carefully and look at the equipment to become familiar with the device before trying to install, operate, service, or maintain it. The following special messages may appear throughout this manual or on the equipment to warn of potential hazards or to call attention to information that clarifies or simplifies a procedure.

The addition of either symbol to a “Danger” or “Warning” safety label indicates that an electrical hazard exists which will result in personal injury if the instructions are not followed.

This is the safety alert symbol. It is used to alert you to potential personal injury hazards. Obey all safety messages that accompany this symbol to avoid injury or death.

⚠⚠DANGER

DANGER indicates a hazardous situation which, if not avoided, **will result in** death or serious injury.

Failure to follow these instructions will result in death or serious injury.

⚠WARNING

WARNING indicates a hazardous situation which, if not avoided, **could result in** death or serious injury.

⚠CAUTION

CAUTION indicates a hazardous situation which, if not avoided, **could result in** minor or moderate injury.

NOTICE

NOTICE is used to address practices not related to physical injury.

Please note

Electrical equipment should be installed, operated, serviced, and maintained only by qualified personnel. No responsibility is assumed by Schneider Electric for any consequences arising out of the use of this equipment. A qualified person is one who has skills and knowledge related to the construction, installation, and operation of electrical equipment and has received safety training to recognize and avoid the hazards involved.

Metering equipment symbols

The following IEC 60417 and ISO 7000 symbols may be used on the metering equipment:

Symbol	Reference	Description
	IEC 60417-5172	**Protective Class II equipment** To identify equipment meeting the safety requirements specified for Class II equipment (double or reinforced insulation).
	ISO 7000-0434B	**Caution** To indicate that caution is necessary when operating the device or control close to where the symbol is placed. To indicate that the current situation needs operator awareness or operator action to avoid undesirable consequences.
	ISO 7000-1641	**Operator's manual** To identify the location where the operator's manual is stored or to identify information that relates to the operating instructions. To indicate operating instructions should be considered when operating the device or operating controls close to where the symbol is placed.

Notices

Federal Communications Commission (FCC)

FCC Interference Statement:

This device complies with Part 15 of the FCC Rules. Operation is subject to the following two conditions:

- This device may not cause harmful interference.
- This device must accept any interference received, including interference that may cause undesired operation.

This equipment has been tested and found to comply with the limits for a Class B digital device, pursuant to Part 15 of the FCC Rules. These limits are designed to provide reasonable protection against harmful interference in a residential installation. This equipment generates, uses, and can radiate radio frequency energy and, if not installed and used in compliance with the instructions, may cause harmful interference to radio communications. However, there is no guarantee that interference does not occur in a particular installation. If this equipment does cause harmful interference to radio or television reception, which can be determined by turning the equipment off and on, the user is encouraged to try to correct the interference by one of the following measures:

- Reorient or relocate the receiving antenna.
- Increase the separation between the equipment and receiver.
- Connect the equipment into an outlet on a circuit different from that to which the receiver is connected.
- Consult the dealer or an experienced radio/television (TV) technician for help.

Caution:

Any changes or modifications not expressly approved by the party responsible for compliance could void the user's authority to operate this equipment.

This transmitter must not be located or operating in conjunction with any other antenna or transmitter.

Radiation Exposure Statement:

This equipment complies with FCC radiation exposure limits set forth for an uncontrolled environment. This equipment should be installed and operated with minimum distance 200 mm (7.87 in) between the radiator and your body.

NOTE: The country code selection is for non-US model only and is not available to all US models. As per FCC regulation, all Wi-Fi products marketed in US must be fixed to US operation channels only.

Industry Canada

Industry Canada Statement:

This device complies with Innovation, Science and Economic Development Canada (ISED) license-exempt Radio Standards Specification (RSS). Operation is subject to the following two conditions:

- This device may not cause harmful interference.
- This device must accept any interference received, including interference that may cause undesired operation.

Radiation Exposure Statement:

This equipment complies with ISED radiation exposure limits set forth for an uncontrolled environment. This equipment should be installed and operated with greater than 200 mm (7.87 in) between the radiator and your body.

About the document

Document scope

This manual describes the features of the PowerLogic™ Intuitive PM7100 / PM7200 / PM7300 series power meters and provides installation and configuration instructions.

Throughout the manual, the term “meter”, “device”, “equipment” or “product” refers to all models of the PM7100 / PM7200 / PM7300. Any differences between the models, such as a feature specific to one model, are indicated with the appropriate model number or description.

This manual assumes that you understand power metering and are familiar with the equipment and power system in which your meter is installed.

This manual does not include instructions on incorporating meter data or performing meter configuration using energy management systems or software.

Validity note

The characteristics of the products described in this document are intended to match the characteristics that are available on www.se.com. As part of our corporate strategy for constant improvement, we may revise the content over time to enhance clarity and accuracy. If you see a difference between the characteristics in this document and the characteristics on www.se.com, consider www.se.com to contain the latest information.

Product related information

Refer to the chapter Safety precautions, page 17 for the product related safety messages.

General cybersecurity information

In recent years, the growing number of networked machines and production plants has seen a corresponding increase in the potential for cyber threats, such as unauthorized access, data breaches, and operational disruptions. You must, therefore, consider all possible cybersecurity measures to help protect assets and systems against such threats.

To help keep your Schneider Electric products secure and protected, it is in your best interest to implement the cybersecurity best practices as described in the Cybersecurity Best Practices document.

Schneider Electric provides additional information and assistance:

- Subscribe to the Schneider Electric security newsletter.
- Visit the Cybersecurity Support Portal web page to:
  - Find Security Notifications.
  - Report vulnerabilities and incidents.
- Visit the Schneider Electric Cybersecurity and Data Protection Posture web page to:
  - Access the cybersecurity posture.
  - Learn more about cybersecurity in the cybersecurity academy.
  - Explore the cybersecurity services from Schneider Electric.

Product related cybersecurity information

Total protection of components (equipment/devices) systems, organizations, and networks from cyber attack threats requires multi-layered cyber risk mitigation measures, early detection of incidents, and appropriate response and recovery plans when incidents occur. For more information about cybersecurity, refer to the Cybersecurity Guidelines, page 49.

⚠ WARNING

POTENTIAL COMPROMISE OF SYSTEM AVAILABILITY, INTEGRITY, AND CONFIDENTIALITY

- Set a display passcode to help reduce the risk of unauthorized physical access to the meter.
- Disable unused ports/services and default accounts, where possible, to minimize pathways for malicious attacks.
- Place networked devices behind multiple layers of cyber defenses (such as firewalls, network segmentation, and network intrusion detection and protection).
- Use cybersecurity best practices (for example: least privilege, separation of duties) to help prevent unauthorized exposure, loss, modification of data and logs, interruption of services, or unintended operation.

Failure to follow these instructions can result in death, serious injury, or equipment damage.

Environmental data

For product compliance and environmental information, refer to the Schneider Electric Environmental Data Program.

Available languages of the document

The document is available in these languages:

- French (7FR02-0489)
- Spanish (7ES02-0489)
- German (7DE02-0489)
- Chinese (7ZH02-0489)

Related documents

Title of documentation	Reference number
PowerLogic™ Intuitive PM7100 / PM7200 / PM7300 instruction sheet	PKR39369
PowerLogic™ Engineering Suite configuration guide	7EN02-0505
EcoStruxure™ Power Device (EPD) user guide	DOCA0365

To find documents online, visit the Schneider Electric download center (www.se.com/ww/en/download/).

Information on non-inclusive or insensitive terminology

As a responsible, inclusive company, Schneider Electric is constantly updating its communications and products that contain non-inclusive or insensitive terminology. However, despite these efforts, our content may still contain terms that are deemed inappropriate by some customers.

Trademarks

PowerLogic™ and Schneider Electric are trademarks or registered trademarks of Schneider Electric in France, the USA, and other countries.

The Bluetooth® word mark and logos are registered trademarks owned by Bluetooth SIG, Inc. and any use of such marks by Schneider Electric is under license.

Table of Contents

Table of Contents 11
1. Safety precautions 17
2. Meter overview 19
2.1 Overview 19
2.2 Meter models 19
2.3 Feature summary 20
2.4 Data display and analysis tools 22
2.4.1 Meter configuration 22
2.4.2 Bluetooth interface 23
2.4.3 Modbus command interface 23
2.4.4 EcoStruxure™ Building Operation 23
2.4.5 EcoStruxure™ Power Monitoring Expert 23
3. Hardware reference 25
3.1 Supplemental information 25
3.2 Dimensions 25
3.3 Mounting 25
3.4 Meter description 26
3.5 Terminal covers 28
3.6 LED indicators 28
3.6.1 Alarm/energy pulsing LED 28
3.6.2 Heartbeat/serial communications LED 28
3.6.3 Ethernet communications LEDs 28
3.7 Wiring 29
3.7.1 Power system wiring - Voltage and current measurement circuits 29
3.7.2 Control power (auxiliary power) 33
3.7.3 Input, output and communications wiring 35
4. Display 38
4.1 Display overview 38
4.2 Default data display screen 38
4.3 Display menu icons 39
4.4 Notification icons 39
4.5 Meter display language 40
4.6 Meter screen navigation 40
4.7 Access counter screen 40
4.8 Button Shortcuts 40
4.8.1 Resetting the meter to the default language 40
4.8.2 Enabling Bluetooth 41
4.9 Meter screen menus overview 41
4.10 Menu tree 41

4.10.1 Data display screens 43
5. Cybersecurity 49
5.1 Overview 49
5.2 Cybersecurity in Schneider Electric 49
5.3 Cybersecurity resources 50
5.4 Product defense-in-depth 50
5.4.1 Device security capabilities 51
5.4.2 Protected environment assumptions 52
5.4.3 Potential risks and compensating controls 53
5.5 Default settings 54
5.6 Bluetooth user account and display passcode 54
5.7 Hardening 55
5.8 Bluetooth pairing and device recognition 56
5.9 Enabling and disabling communication protocols 56
5.10 Reporting a security incident or vulnerability 56
5.11 Firmware upgrades 56
5.12 Secure disposal guidelines 56
5.12.1 Secure disposal checklist 57
6. Configuring 58
6.1 Configuring using the display 58
6.1.1 Enabling or disabling the display passcode during initial startup 58
6.1.2 Configuring the display passcode 59
6.1.3 Resetting the display passcode using the product reset 59
6.1.4 Configuring the basic setup parameters 60
6.1.5 Configuring the advanced setup parameters 62
6.1.6 Configuring the demand calculations 63
6.1.7 Configuring the serial communications 64
6.1.8 Configuring the Ethernet communications 65
6.1.9 Configuring the BACnet/IP settings 67
6.1.10 Configuring Bluetooth 68
6.1.11 Configuring the alarm/energy pulsing LED 69
6.1.12 Configuring the digital inputs 70
6.1.13 Configuring the digital outputs 71
6.1.14 Configuring the relay outputs 73
6.1.15 Configuring the display settings 74
6.1.16 Configuring the regional settings 75
6.1.17 Configuring date and time 75
6.1.18 Performing global resets 76
6.1.19 Performing single resets 76
6.1.20 Performing user account resets 77
6.1.21 Locking or unlocking revenue meter 78
6.2 Configuring using the PowerLogic™ Engineering Suite 79

6.2.1 Configuring the meter settings 79
7. Operating 80
7.1 Viewing voltage parameters 80
7.2 Viewing current parameters 81
7.3 Viewing power parameters 82
7.4 Viewing energy parameters 83
7.5 Viewing alarms 83
7.6 Viewing inputs/outputs status 84
7.7 Viewing diagnostics information 85
7.8 Acknowledging the control power (auxiliary power) interruption event 85
8. Maintenance 87
8.1 Maintenance overview 87
8.2 Meter memory 87
8.3 Meter battery 87
8.4 Diagnostics information 87
8.5 Firmware version, model, and serial number 87
8.5.1 Firmware upgrades 88
8.6 Control power (auxiliary power) interruption event 88
8.7 Wrench icon 88
8.8 Phasors 89
8.8.1 Phasor screens 89
8.9 Troubleshooting 89
8.9.2 Troubleshooting checks 90
8.9.3 Diagnostic codes 91
8.10 Technical assistance 92
9. Technical reference 93
9.1 Communications 93
9.1.1 Recommended network communication metrics 93
9.1.2 Serial communications 93
9.1.3 Ethernet communications 94
9.1.4 BACnet/IP 96
9.2 Logging 100
9.2.1 Data log 100
9.2.2 Alarm log 100
9.2.3 Memory allocation for log files 100
9.3 Inputs/Outputs 101
9.3.1 Digital input applications 101
9.3.2 Digital output applications 101
9.3.3 Relay output applications 102
9.3.4 Energy pulsing 102
9.3.5 Input metering 102
9.4 Resets 103

9.4.1 Meter resets ... 103
9.5 Alarms ... 104
9.5.1 Alarms overview ... 104
9.5.2 Available alarms ... 104
9.5.3 Unary alarms ... 104
9.5.4 Digital alarms ... 104
9.5.5 Standard alarms ... 105
9.5.6 Alarm priorities ... 109
9.5.7 Alarm setup overview ... 110
9.5.8 LED alarm indicator ... 110
9.5.9 Alarm display and notification ... 110
9.5.10 Active alarms list and alarm history log ... 110
9.6 Multi-tariff ... 112
9.6.1 Overview ... 112
9.6.2 Multi-tariff implementation ... 112
9.6.3 Tariff setup ... 113
9.6.4 Command mode overview ... 113
9.6.5 Time-of-day mode overview ... 113
9.6.6 Input mode overview ... 115
9.7 Measurements ... 120
9.7.1 Instantaneous measurements ... 120
9.7.2 Energy measurements ... 120
9.7.3 Preset energy ... 120
9.7.4 Min/Max values ... 120
9.7.5 Demand measurements ... 121
9.7.6 Power and power factor ... 124
9.7.7 Timers ... 129
9.8 Power quality ... 130
9.8.1 Power quality measurements ... 130
9.8.2 Harmonics overview ... 130
9.8.3 Total harmonic distortion % ... 130
9.8.4 Total demand distortion ... 130
9.8.5 Harmonic content calculations ... 131
9.8.6 THD% calculations ... 131
9.8.7 thd calculations ... 131
9.8.8 TDD calculations ... 131
9.9 Verifying accuracy ... 132
9.9.1 Overview of meter accuracy ... 132
9.9.2 Accuracy test requirements ... 132
9.9.3 Meter settings for accuracy testing ... 133
9.9.4 Verifying accuracy test ... 133
9.9.5 Accuracy verification test points ... 135
9.9.6 Energy pulsing considerations ... 136

9.9.7 VT and CT considerations 136
9.9.8 Example calculations 136
9.9.9 Typical sources of test errors 138
9.10 Revenue (MID/MIR meter models) 139
9.10.1 Overview 139
9.10.2 Revenue metering components 139
9.10.3 Revenue firmware security features 139
9.10.4 Protected setup parameters and functions 139
9.10.5 Revenue locking 140
10. Device specifications 142

1. Safety precautions

Installation, wiring, testing, and service must be performed in compliance with all local and national electrical codes.

⚠⚠DANGER

HAZARD OF ELECTRIC SHOCK, EXPLOSION, OR ARC FLASH

- Always apply appropriate personal protective equipment (PPE) and follow safe electrical work practices. See NFPA 70E in the USA, CSA Z462 or applicable local standards.
- Always turn off all power supplying equipment before working on or inside the equipment.
- Always use a properly rated voltage sensing device to confirm that all power is off.
- Do not exceed the maximum ratings of this device.
- Do not install this product in hazardous classified locations.
- Always install products rated only for basic insulation on insulated conductors.
- Replace all doors, covers, and protective devices before powering the equipment.
- Treat communications and I/O wiring connected to multiple devices as hazardous live until determined otherwise.
- Never short the secondary of a Voltage Transformer (VT).
- Never bypass external fusing.
- Never open circuit a Current Transformer (CT).
- Connect current inputs only to AC systems and only through grounded CTs. Use UL 2808-listed energy-monitoring CTs for UL 2808-compliant installations.
- This product has not been evaluated for retrofit (modification of a field-installed panel) applications as per UL 2808.
- Do not install CTs in equipment where they exceed 75% of the wiring space of any cross-sectional area in the equipment.
- Do not install CTs or meter in areas where ventilation openings may be blocked or in areas of breaker arc venting.
- Secure CT secondary conductors to ensure they do not contact live circuits.
- Do not install CTs using Class 2 wiring methods or connect them to Class 2 equipment. See NFPA 70E in the USA or applicable local standards.
- Do not mount the meter within 50.8 mm (2 in) of any live circuits including the primary conductors, primary terminals, and primary lugs.
- Do not allow the meter to contact the panel interior insulation inside the enclosure.
- Do not use water or any liquid material to clean the product. Use a cleaning cloth to remove dirt. If dirt cannot be removed, contact local Technical Support representative.
- Before installation, verify the rating and the characteristics of the supply side over current protection devices. Do not exceed the maximum current or voltage rating of the meter.

Failure to follow these instructions will result in death or serious injury.

⚠ WARNING

UNINTENDED OPERATION

- Do not use the meter for critical control or protection applications where human or equipment safety relies on the operation of the control circuit.
- Do not use the meter if wrench icon is displayed on the top left corner of the display screen.

Failure to follow these instructions can result in death, serious injury, or equipment damage.

⚠ WARNING

INACCURATE DATA RESULTS

- Do not rely solely on data displayed on the display or in software to determine if this device is functioning correctly or complying with all applicable standards.
- Do not use data displayed on the display or in software as a substitute for proper workplace practices or equipment maintenance.

Failure to follow these instructions can result in death, serious injury, or equipment damage.

⚠ WARNING

POTENTIAL COMPROMISE OF SYSTEM AVAILABILITY, INTEGRITY, AND CONFIDENTIALITY

- Set a display passcode to help reduce the risk of unauthorized physical access to the meter.
- Disable unused ports/services and default accounts, where possible, to minimize pathways for malicious attacks.
- Place networked devices behind multiple layers of cyber defenses (such as firewalls, network segmentation, and network intrusion detection and protection).
- Use cybersecurity best practices (for example: least privilege, separation of duties) to help prevent unauthorized exposure, loss, modification of data and logs, interruption of services, or unintended operation.

Failure to follow these instructions can result in death, serious injury, or equipment damage.

2. Meter overview

2.1 Overview

The PowerLogic™ Intuitive PM7100 / PM7200 / PM7300 series power and energy meters offer value for energy monitoring and cost management applications. These meters comply with Class 0.2S or Class 0.5S accuracy standards featuring high quality, reliability, and affordability in a compact, easy-to-install format.

The key features of the meters are:

- Intuitive color graphical display
- Power and energy metering: 3-phase voltage, current, power, demand, energy, frequency, and power factor
- Multi-tariff controlled by internal clock, digital inputs or communication
- Power quality analysis: THD, thd, and TDD
- Harmonics: individual odd and even up to 31st
- Digital outputs/digital inputs
- Relay outputs
- Time-stamped alarms
- Data logging
- Bluetooth® LE communication with core specification version 5.3

  NOTE: Bluetooth is available only in specific models.
- Serial port with Modbus protocol (RS-485)
- Ethernet port with Modbus TCP/IP and BACnet/IP
- IPv4, IPv6, DPWS, DHCP, BOOTP
- MID/MIR compliance

2.2 Meter models

The following table provides an overview of various meter models, highlighting their key features and specifications:

Model	Commercial reference	Description
PM7112DUW	METSEPM7112DUW	Front panel mount with integrated display, 96 x 96 mm form factor, RS-485 communication port, accuracy class 0.5S (Wh) and accuracy class 2 (varh), one digital input and one digital output, two multi-tariffs, 34 alarms, 31st harmonic, and 14 parameters x 15 minutes x 180 days data logging.
PM7142DUW	METSEPM7142DUW	Front panel mount with integrated display, 96 x 96 mm form factor, TCP/IP Ethernet communication port, accuracy class 0.5S (Wh) and accuracy class 2 (varh), one digital input and one digital output, two multi-tariffs, 34 alarms, 31st harmonic, and 14 parameters x 15 minutes x 180 days data logging.
PM7151DUW	METSEPM7151DUW	Front panel mount with integrated display, 96 x 96 mm form factor, TCP/IP Ethernet communication port, accuracy class 0.5S (Wh) and accuracy class 2 (varh), two digital inputs and two digital outputs, two relay outputs, four multi-tariffs, 35 alarms, 31st harmonic, 14 parameters x 15 minutes x 180 days data logging and the meter calibrated to comply with MID/MIR standards.
PM7211DUW	METSEPM7211DUW	Front panel mount with integrated display, 96 x 96 mm form factor, RS-485 communication port, Bluetooth, accuracy class 0.5S (Wh) and accuracy class 2 (varh), one digital input and one digital output, two multi-tariffs, 34 alarms, 31st harmonic, 14 parameters x 15 minutes x 180 days data logging, and the meter calibrated to comply with MID/MIR standards.
PM7212DUW	METSEPM7212DUW	Front panel mount with integrated display, 96 x 96 mm form factor, RS-485 communication port, Bluetooth, accuracy class 0.5S (Wh) and accuracy class 2 (varh), one digital input and one digital output, two multi-tariffs, 34 alarms, 31st harmonic, and 14 parameters x 15 minutes x 180 days data logging.
PM7222DUW	METSEPM7222DUW	Front panel mount with integrated display, 96 x 96 mm form factor, RS-485 communication port, Bluetooth, accuracy class 0.5S (Wh) and accuracy class 2 (varh), two digital inputs

Model	Commercial reference	Description
		and two digital outputs, four multi-tariffs, 35 alarms, 31st harmonic, and 14 parameters x 15 minutes x 180 days data logging.
PM7231DUW	METSEPM7231DUW	Front panel mount with integrated display, 96 x 96 mm form factor, RS-485 communication port, Bluetooth, accuracy class 0.5S (Wh) and accuracy class 2 (varh), four digital inputs, two relay outputs, 16 multi-tariffs, 37 alarms, 31st harmonic, 14 parameters x 15 minutes x 180 days data logging, and the meter calibrated to comply with MID/MIR standards.
PM7232DUW	METSEPM7232DUW	Front panel mount with integrated display, 96 x 96 mm form factor, RS-485 communication port, Bluetooth, accuracy class 0.5S (Wh) and accuracy class 2 (varh), four digital inputs, two relay outputs, 16 multi-tariffs, 37 alarms, 31st harmonic, and 14 parameters x 15 minutes x 180 days data logging.
PM7252DUW	METSEPM7252DUW	Front panel mount with integrated display, 96 x 96 mm form factor, TCP/IP Ethernet communication port, Bluetooth, accuracy class 0.5S (Wh) and accuracy class 2 (varh), two digital inputs and two digital outputs, two relay outputs, four multi-tariffs, 35 alarms, 31st harmonic, and 14 parameters x 15 minutes x 180 days data logging.
PM7332DUW	METSEPM7332DUW	Front panel mount with integrated display, 96 x 96 mm form factor, RS-485 communication port, Bluetooth, accuracy class 0.2S (Wh) and accuracy class 2 (varh), four digital inputs, two relay outputs, 16 multi-tariffs, 37 alarms, 31st harmonic, and 14 parameters x 15 minutes x 180 days data logging.
PM7351DUW	METSEPM7351DUW	Front panel mount with integrated display, 96 x 96 mm form factor, TCP/IP Ethernet communication port, Bluetooth, accuracy class 0.2S (Wh) and accuracy class 2 (varh), two digital inputs and two digital outputs, two relay outputs, 16 multi-tariffs, 31st harmonic, 35 alarms, 14 parameters x 15 minutes x 180 days data logging, and the meter calibrated to comply with MID/MIR standards.

2.3 Feature summary

The following table provides an overview of the key features and functionalities of the meter models:

		PM7112DUW	PM7142DUW	PM7151DUW	PM7211DUW	PM7212DUW	PM7222DUW
Power and energy metering: 3-phase voltage, current, power, demand, energy, frequency, and power factor		✓	✓	✓	✓	✓	✓
Accuracy	Wh	Class 0.5S	Class 0.5S	Class 0.5S	Class 0.5S	Class 0.5S	Class 0.5S
	varh	Class 2	Class 2	Class 2	Class 2	Class 2	Class 2
Digital inputs (S1, S2, S3, S4)		1	1	2	1	1	2
Digital outputs (D1, D2)		1	1	2	1	1	2
Relay outputs (R1, R2)		—	—	2	—	—	—
Alarms		34	34	35	34	34	35
Multi-tariffs		2	2	4	2	2	4
Power quality analysis: THD, thd, and TDD		✓	✓	✓	✓	✓	✓
Power quality analysis: Harmonics, individual (odd and even) up to		31st	31st	31st	31st	31st	31st
Data logging (parameters x minute interval x days)		14x15x180	14x15x180	14x15x180	14x15x180	14x15x180	14x15x180
Bluetooth communication		—	—	—	✓	✓	✓
Communications: RS-485 Modbus protocol		✓	—	—	✓	✓	✓
Communications: Ethernet port with Modbus TCP and BACnet/IP		—	✓	✓	—	—	—
MID/MIR		—	—	✓	✓	—	—

		PM7231DUW	PM7232DUW	PM7252DUW	PM7332DUW	PM7351DUW
Power and energy metering: 3-phase voltage, current, power, demand, energy, frequency, and power factor		✓	✓	✓	✓	✓
Accuracy	Wh	Class 0.5S	Class 0.5S	Class 0.5S	Class 0.2S	Class 0.2S
	varh	Class 2	Class 2	Class 2	Class 2	Class 2

	PM7231DUW	PM7232DUW	PM7252DUW	PM7332DUW	PM7351DUW
Digital inputs (S1, S2, S3, S4)	4	4	2	4	2
Digital outputs (D1, D2)	—	—	2	—	2
Relay outputs (R1, R2)	2	2	2	2	2
Alarms	37	37	35	37	35
Multi-tariffs	16	16	4	16	16
Power quality analysis: THD, thd, and TDD	✓	✓	✓	✓	✓
Power quality analysis: Harmonics, individual (odd and even) up to	31st	31st	31st	31st	31st
Data logging (parameters x minute interval x days)	14x15x180	14x15x180	14x15x180	14x15x180	14x15x180
Bluetooth communication	✓	✓	✓	✓	✓
Communications: RS-485 Modbus protocol	✓	✓	—	✓	—
Communications: Ethernet port with Modbus TCP and BACnet/IP	—	—	✓	—	✓
MID/MIR	✓	—	—	—	✓

Functions and characteristics

This section details the various functions and characteristics of the meters.

Table 1 - General

Use on LV and MV systems	✓
Basic metering with THD and min/max readings	✓
Input metering	✓
Monthly auto reset for max demand, Wh	✓
CT polarity/phase sequence detections	✓

Table 2 - Instantaneous rms values

Current (Average, per phase and neutral)	✓
Voltage (Average, per phase L-L, and L-N)	✓
Frequency	✓
Real, reactive, and apparent power (Total and per phase)	Signed, four quadrant
True power factor (Average and per phase)	Signed, four quadrant
Displacement PF (Average and per phase)	Signed, four quadrant
% Unbalanced I, V L-N, and V L-L	✓

Table 3 - Energy values

Partial and non-resettable accumulated active, reactive, and apparent energy	Received/Delivered, net and absolute

Table 4 - Demand values

Current average	Present, last, predicted, peak, and peak date time
Active power	Present, last, predicted, peak, and peak date time
Reactive power	Present, last, predicted, peak, and peak date time
Apparent power	Present, last, predicted, peak, and peak date time

Table 4 - Demand values (Continued)

Peak demand with timestamping	✓
Demand calculation (Sliding, fixed and rolling block, and thermal methods)	✓
Synchronization of the measurement window to input, communication command or internal clock	✓
Configurable demand intervals	✓

NOTE: Reactive power and energy are calculated according to IEC 62053-24. Harmonics are not included in this calculation.

Table 5 - Power quality measurements

THD (Total Harmonic Distortion), thd	I, V L-N, V L-L
TDD (Total Demand Distortion)	✓
Individual harmonics (odd and even)	✓

Table 6 - Other measurements

I/O Timers and Counters (1)	✓
Operating timer (1)	✓
Active load timer (1)	✓
Alarm counters and alarm logs	✓

Table 7 - Data recording

Min/max of instantaneous values, plus phase identification (1)	✓
Alarms with 1 s timestamping (1)	✓
Data logging	Data logging up to 14 parameters with configurable interval and duration (for example, 14 parameters for 180 days at 15-minute interval)
Maintenance, alarm, and event logs	✓
Preset energy	✓

Table 8 - Wetting voltage

Wetting voltage	✓

2.4 Data display and analysis tools

2.4.1 Meter configuration

Meter configuration can be performed through the display and PowerLogic™ Engineering Suite.

PowerLogic™ Engineering Suite is a meter configuration tool that can be downloaded for free at www.se.com.

See the PowerLogic™ Engineering Suite online help or the PowerLogic™ Engineering Suite device configuration guide (7EN02-0505) for instructions on how to configure your meter. To download a copy, go to www.se.com and search for PowerLogic™ Engineering Suite device configuration guide.

(1) Stored in non-volatile memory.

2.4.2 Bluetooth interface

Meter's instantaneous parameters (data monitoring), device info, date and time, and alarm information can be accessed using the Bluetooth interface from a smartphone through the EcoStruxure™ Power Device (EPD) application.

The EcoStruxure™ Power Device (EPD) is a panel commissioning tool which can be downloaded for free at www.se.com. See the EcoStruxure™ Power Device (EPD) user guide for instructions on how to commission your meter. To download a copy, go to www.se.com and search for EcoStruxure™ Power Device (EPD) user guide (DOCA0365).

NOTE: Limited support for EPD at launch, with full features enabled later.

Data transferred over Bluetooth wireless technology is encrypted using AES 128-bit encryption algorithm.

2.4.3 Modbus command interface

Most of the meter's real-time and logged data, as well as basic configuration and setup of meter features, can be accessed and programmed using a Modbus command interface as published in the meter's Modbus register list along with the meter firmware.

This is an advanced procedure that should only be performed by users with advanced knowledge of Modbus, their meter, and the power system being monitored. For further information on the Modbus command interface, contact Technical Support.

See your meter's Modbus register list at www.se.com for the Modbus mapping information and basic instructions on command interface.

2.4.4 EcoStruxure™ Building Operation

EcoStruxure™ Building Operation is a complete software solution for integrated monitoring, control, and management of energy, lighting, fire safety, and HVAC.

It natively supports the major communication standards in building automation and security management, including TCP/IP, LonWorks, BACnet, Modbus and Ethernet.

2.4.5 EcoStruxure™ Power Monitoring Expert

EcoStruxure™ Power Monitoring Expert is a complete supervisory software package for power management applications.

The software collects and organizes data gathered from your facility's electrical network and presents it as meaningful, actionable information using an intuitive web interface.

EcoStruxure™ Power Monitoring Expert communicates with devices on the network to provide:

- Real-time monitoring through a multi-user web portal
- Trend graphing and aggregation
- Power quality analysis and compliance monitoring
- Pre-configured and custom reporting

See the EcoStruxure™ Power Monitoring Expert online help for instructions on how to add your device into its system for data collection and analysis.

2.4.6 EcoStruxure™ Power Operation

EcoStruxure™ Power Operation is a complete real-time monitoring and control solution for large facility and critical infrastructure operations.

It communicates with your device for data acquisition and real-time control. You can use EcoStruxure™ Power Operation for:

- System supervision
- Real-time and historical trending, event logging
- PC-based custom alarms

See the EcoStruxure™ Power Operation online help for instructions on how to add your device into its system for data collection and analysis.

3. Hardware reference

3.1 Supplemental information

This document should be used along with the instruction sheet included in the box with your device and accessories.

See your device's instruction sheet for information related to installation.

See your product's catalog pages at www.se.com for information about your device, its options, and accessories.

You can download updated documentation from www.se.com or contact your local Schneider Electric representative for the latest information about your product.

3.2 Dimensions

The following illustration shows the meter dimensions:

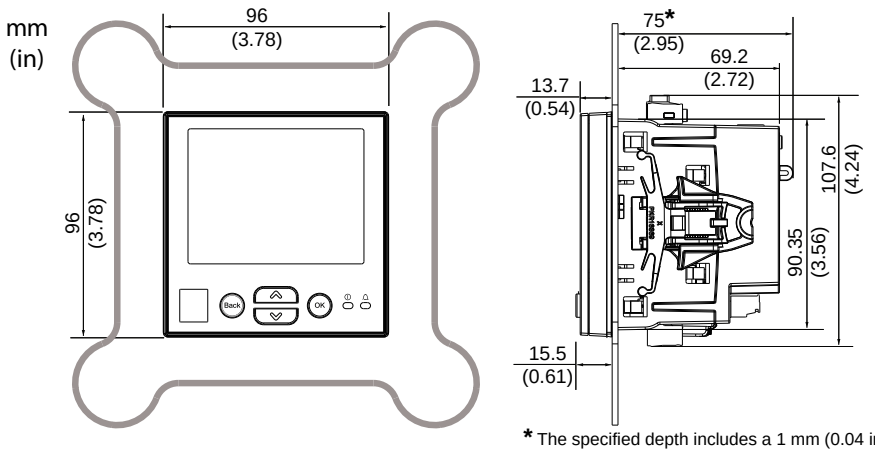

* The specified depth includes a 1 mm (0.04 in) panel thickness. This dimension may vary depending on the actual panel thickness. For example, if the panel thickness increases, the overall depth (75 mm (2.95)) will decrease accordingly.

3.3 Mounting

The following illustration shows the meter's mounting instructions:

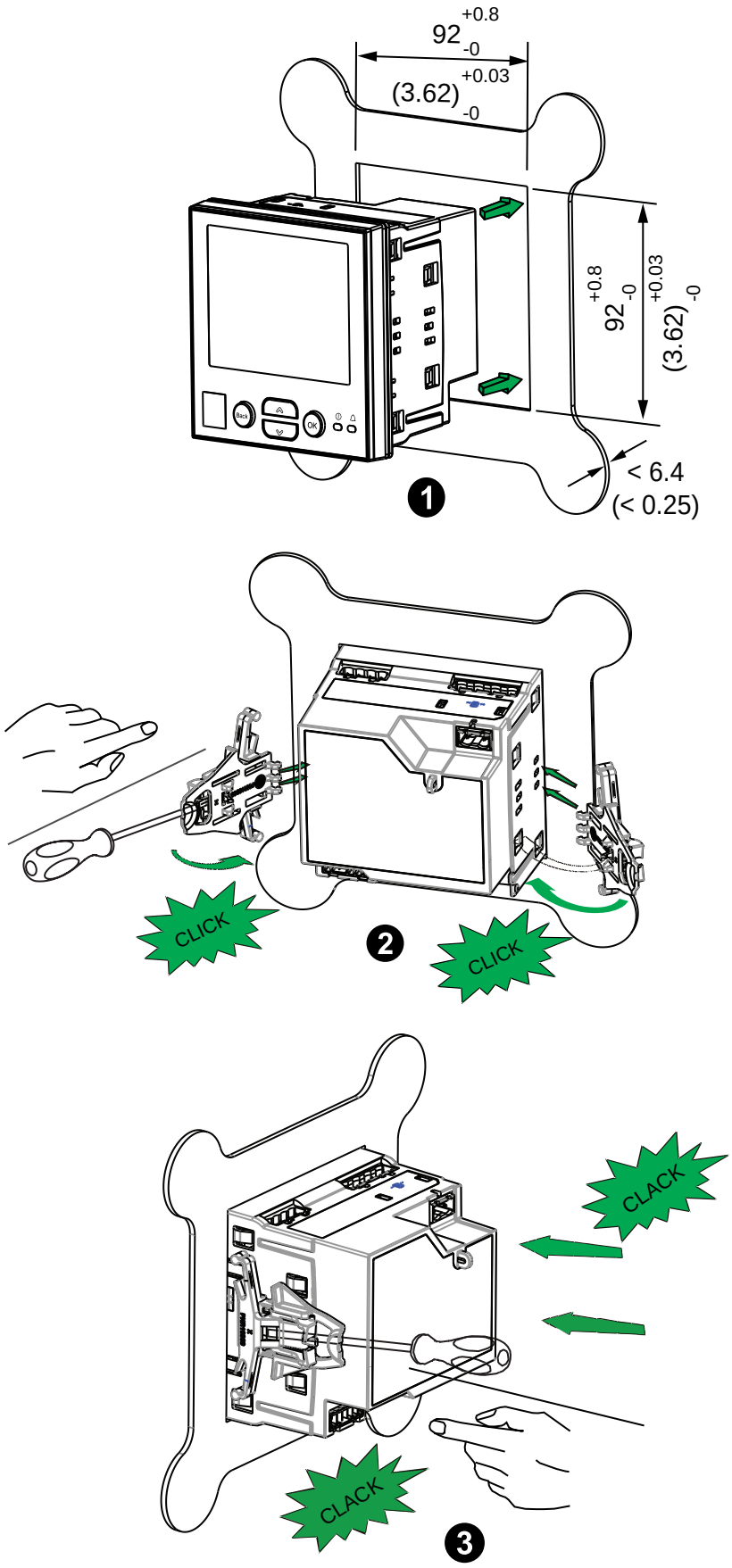

3.4 Meter description

The following table lists the parts of the meter and their description:

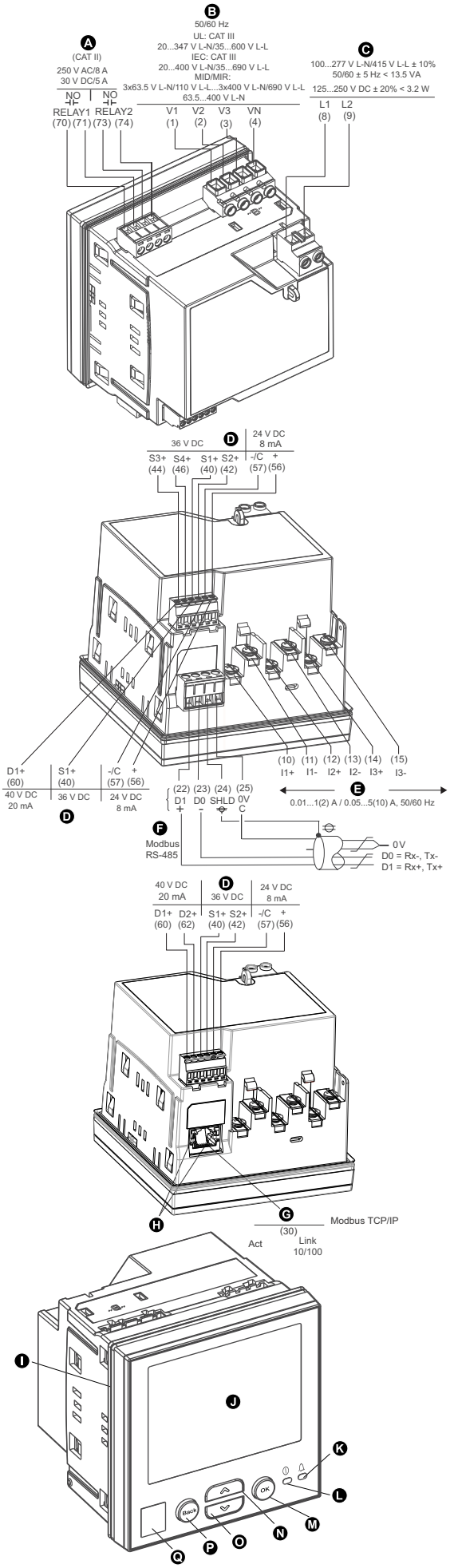

A	Relay output (Relay1, Relay2 (NO, ⊣⊢)) (PM7151DUW / PM7231DUW / PM7232DUW / PM7252DUW / PM7332DUW / PM7351DUW)
B	Voltage input (V1, V2, V3, VN)
C	Control power (Auxiliary power) input (L1, L2)
D	Digital output/Digital input (D1+, S1+, -/C, +) (PM7112DUW / PM7142DUW / PM7211DUW / PM7212DUW)
	Digital output/Digital input (D1+, D2+, S1+, S2 +, -/C, +) (PM7151DUW / PM7222DUW / PM7252DUW / PM7351DUW)
	Digital input (S3+, S4+, S1+, S2+, -/C, +) (PM7231DUW / PM7232DUW / PM7332DUW)
E	Current input (I1+, I1-, I2+, I2-, I3+, I3-)
F	Modbus RS-485 input (D1/+, D0/-, ⊖, 0V) (PM7112DUW / PM7211DUW / PM7212DUW / PM7222DUW / PM7231DUW / PM7232DUW / PM7332DUW)
G	Ethernet port (PM7142DUW / PM7151DUW / PM7252DUW / PM7351DUW)
H	Ethernet port LED indicators (PM7142DUW / PM7151DUW / PM7252DUW / PM7351DUW)
I	Gasket
J	Display
K	Alarm/energy pulsing LED (Amber)
L	Heartbeat/communications LED (Green)
M	**OK** button
N	Up button
O	Down button
P	**Back** button
Q	QR code. Scan the QR code to access product information on the Schneider Electric landing page.

3.5 Terminal covers

The terminal covers for voltage, current, and control/auxiliary power helps prevent and detect tampering. They enclose the terminals, fixing screws, and part of the external conductors and their insulation.

NOTE:

- The terminal covers must be installed and sealed.
- Use steel cable with 1.6 mm (1/16 in) diameter and 152.4 mm (6 in) adjustable length for sealing.

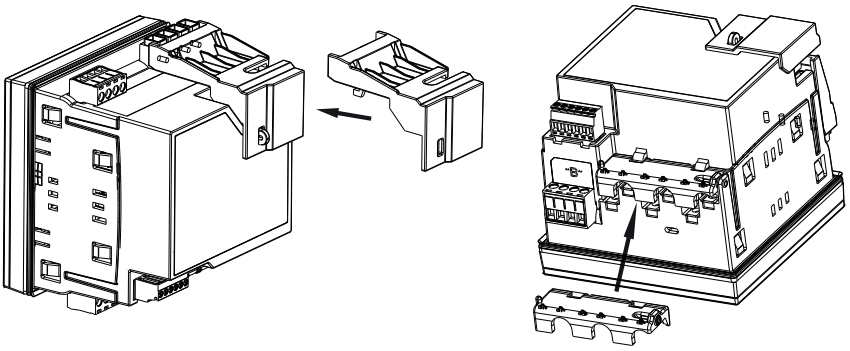

3.6 LED indicators

3.6.1 Alarm/energy pulsing LED

The alarm/energy pulsing LED can be configured for alarm notification or energy pulsing.

When configured for alarm notification, this LED flashes when a high, medium, or low priority alarm is active indicating an active alarm condition or an inactive but unacknowledged high priority alarm.

When configured for energy pulsing, this LED flashes at a rate proportional to the energy consumption which is typically used to verify the power meter's accuracy.

The alarm/energy pulsing LED on the MID/MIR meter models is permanently set for energy pulsing and cannot be disabled or used for alarms.

3.6.2 Heartbeat/serial communications LED

The heartbeat/serial communications LED blinks to indicate the meter's operation and serial Modbus communication status.

The LED blinks at a slow, steady rate to indicate the meter is operational. The LED flashes at a variable, faster rate when the meter is communicating over a Modbus serial communications port.

NOTE:

- You cannot configure this LED for other purposes.
- If the LED remains lit without blinking or flashing, it may indicate a technical problem. In this case, power down the meter and reapply power. If the problem persists, contact Technical Support.

3.6.3 Ethernet communications LEDs

The meter has two LEDs per port for Ethernet communications.

The Link LED indicates Ethernet link status and communication speed. The LED is off when no Ethernet link is detected. The LED is yellow when the Ethernet communication speed is 10 Mbps and green when the Ethernet communication speed is 100 Mbps.

The Act (activity) LED flashes when the meter transmits or receives data through the Ethernet port.

NOTE: You cannot configure these LEDs for other purposes.

3.7 Wiring

3.7.1 Power system wiring - Voltage and current measurement circuits

The following table lists the power system wiring configuration:

A # 500 mA slow blow fuse or circuit breaker

B # Shorting block

C # PT primary slow blow fuses and disconnect switch

Not supplied

♦ indicates wiring for a balanced system

1PH

1PH2W LN

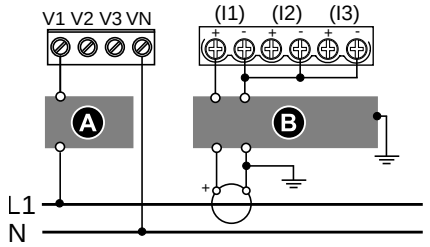

1PH2W LL

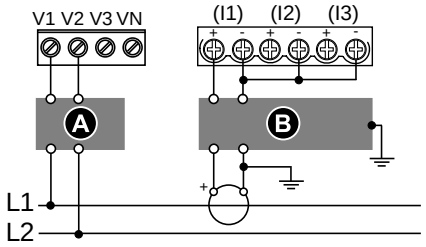

1PH3W LL-N

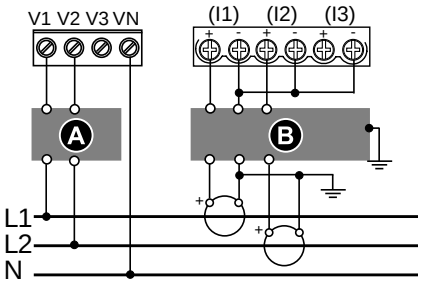

3PH3W

3 CT

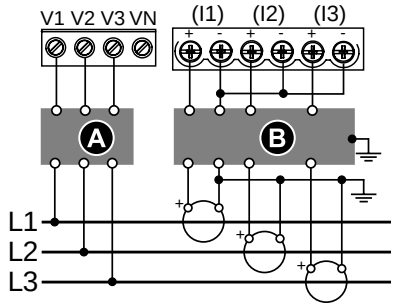

2 CT

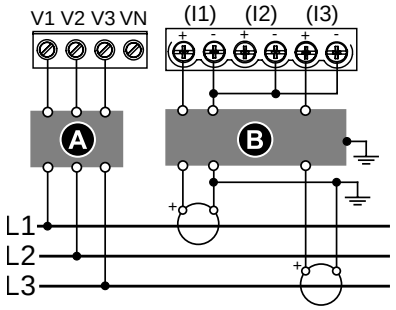

1 CT♦

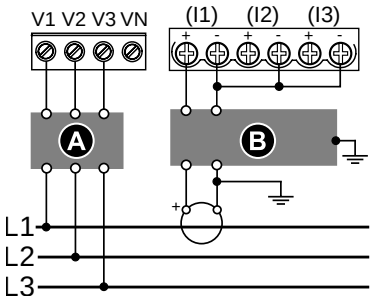

3PH4W

3 CT

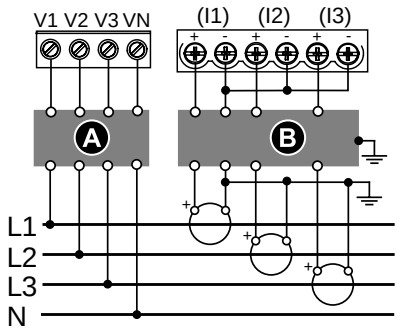

2 CT♦

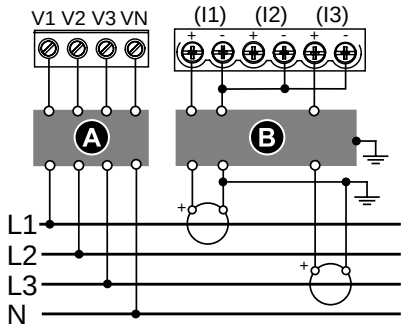

1 CT♦

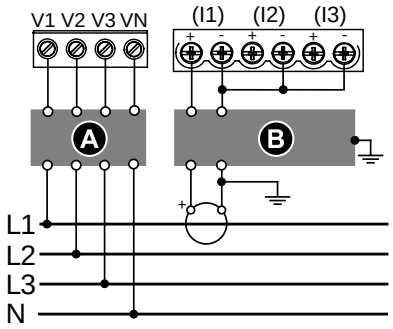

3PH3W

2 VT, 3 CT

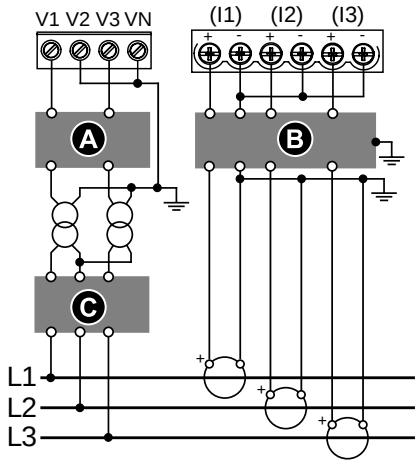

2 VT, 2 CT

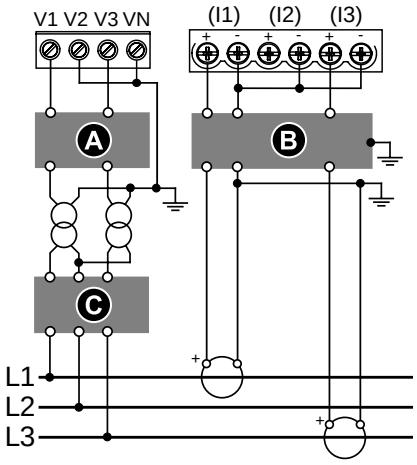

2 VT, 1 CT♦

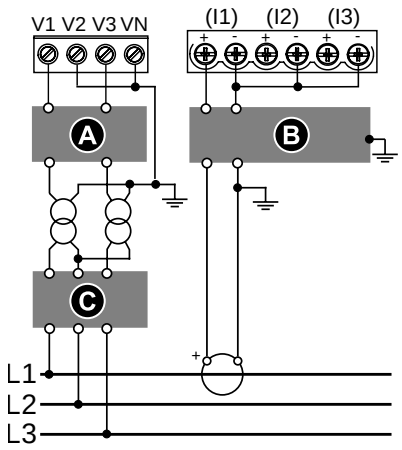

3PH4W

3 VT, 3 CT

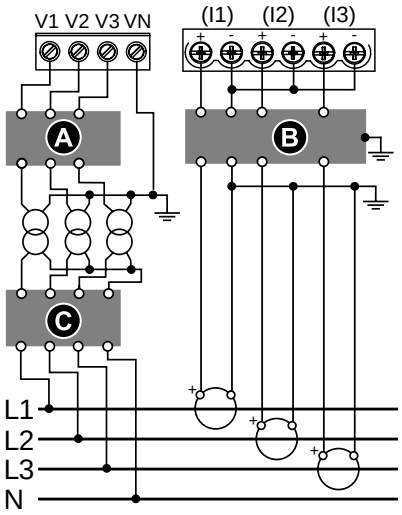

3 VT, 2 CT♦

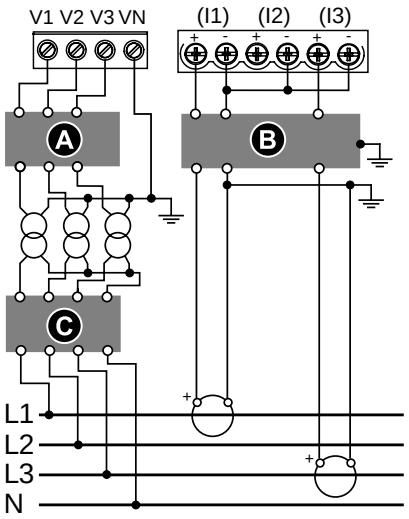

3 VT, 1 CT♦

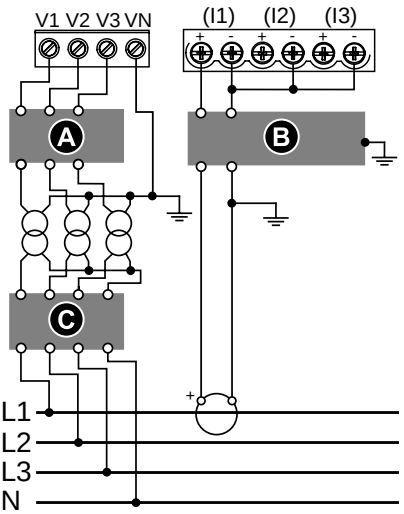

NOTE:

- Clearly label the device's disconnect circuit mechanism and install it within easy reach of the operator.
- The slow blow fuses or circuit breakers must be:
  - Installed in compliance with all local and national electrical codes and standards.
  - Rated for the installation voltage, short-circuit or overcurrent and sized for connected loads.
- Slow blow fuse for neutral terminal is required if the source neutral is not grounded.
- Recommended wire: Copper wire with a compatible copper lug.
- Ground terminal is not available on meter, the shield should be connected to ground at the other end.

3.7.1.1 Direct connect voltage limits

You can connect the meter's voltage inputs directly to the phase voltage lines of the power system if the power system's line-to-line or line-to-neutral voltages do not exceed the meter's direct connect maximum voltage limits.

The meter's voltage measurement inputs are rated by the manufacturer for up to 400 V L-N/690 V L-L. However, the maximum voltage allowed for direct connection may be lower, depending on the local electrical codes and regulations. In US and Canada, the maximum voltage on the meter voltage measurement inputs may not exceed 347 V L-N/600 V L-L.

If your system voltage is greater than the specified direct connect maximum voltage, you must use VTs (voltage transformers) to step down the voltages.

Power system description	Meter setting	Symbol	Direct connect maximum (UL)	Direct connect maximum (IEC)	# of VTs (if required)
Single-phase 2-wire line-to-neutral	1PH2W LN	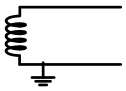	347 V L-N	400 V L-N	1 VT
Single-phase 2-wire line-to-line	1PH2W LL		600 V L-L	600 V L-L	1 VT
Single-phase 3-wire line-to-line with neutral	1PH3W LL with N	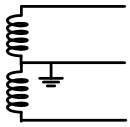	347 V L-N/600 V L-L	400 V L-N/690 V L-L	2 VT
3-phase 3-wire Delta ungrounded	3PH3W Dlt Ungnd	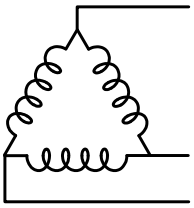	600 V L-L	600 V L-L	2 VT
3-phase 3-wire Delta corner grounded	3PH3W Dlt Crnr Gnd	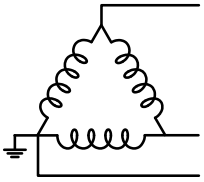	600 V L-L	600 V L-L	2 VT
3-phase 3-wire Wye ungrounded	3PH3W Wye Ungnd	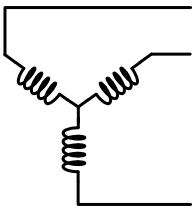	600 V L-L	600 V L-L	2 VT

Power system description	Meter setting	Symbol	Direct connect maximum (UL)	Direct connect maximum (IEC)	# of VTs (if required)
3-phase 3-wire Wye grounded	3PH3W Wye Gnd	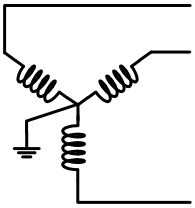	600 V L-L	690 V L-L	2 VT
3-phase 3-wire Wye resistance-grounded with insulation monitoring *	3PH3W Wye Res Gnd	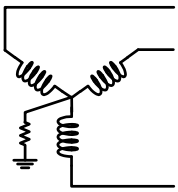	600 V L-L	690 V L-L	2 VT
3-phase 4-wire open Delta center-tapped	3PH4W Opn Dlt Ctr Tp	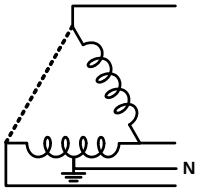	600 V L-L	690 V L-L	3 VT
3-phase 4-wire Delta center-tapped	3PH4W Dlt Ctr Tp	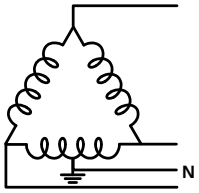	600 V L-L	690 V L-L	3 VT
3-phase 4-wire ungrounded Wye	3PH4W Wye Ungnd	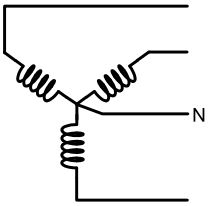	347 V L-N/600 V L-L	347 V L-N/600 V L-L	3 VT or 2 VT
3-phase 4-wire grounded Wye	3PH4W Wye Gnd	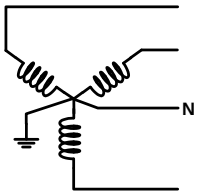	347 V L-N/600 V L-L	400 V L-N/690 V L-L	3 VT or 2 VT
3-phase 4-wire resistance-grounded Wye with insulation monitoring *	3PH4W Wye Res Gnd	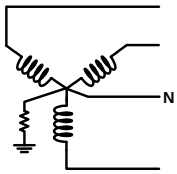	347 V L-N/600 V L-L	400 V L-N/690 V L-L	3 VT or 2 VT

NOTE: * When insulation is monitored, neutral of these systems is considered to be earthed.

3.7.1.2 Balanced system considerations

In situations where you are monitoring a balanced 3-phase load, you may choose to connect only one or two CTs on the phases you want to measure, and then configure the meter so it calculates the current on the unconnected current inputs.

NOTE: For a balanced 4-wire Wye system, the meter's calculations assume that there is no current flowing through the neutral conductor.

Balanced 3-phase Wye system with two CTs

The current for the unconnected current input is calculated so that the vector sum for all three phases equal zero.

Balanced 3-phase Wye or Delta system with one CT

The currents for the unconnected current inputs are calculated so that their magnitude and phase angle are identical and equally distributed, and the vector sum for all three phase currents equal zero.

NOTE: You must always use 3 CTs for 3-phase 4-wire center-tapped Delta or center-tapped open Delta systems.

3.7.2 Control power (auxiliary power)

Wiring configuration

The following table lists the control power (auxiliary power) wiring configuration:

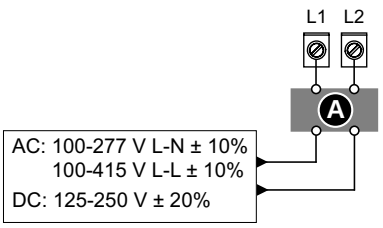

A	500 mA slow blow fuse

L1 and L2 are non-polarized. If using an AC power supply with a neutral, connect the neutral to the meter's L2 terminal.

Always use a slow blow fuse on L1. Use a slow blow fuse on L2 when connecting an ungrounded neutral to the control power. If using a control power transformer, install a slow blow fuse on the primary and secondary sides of the transformer. The slow blow fuses or circuit breakers must be rated for the installation voltage and sized for the short-circuit or overcurrent.

⚠ CAUTION

RISK OF INJURY OR EQUIPMENT DAMAGE

Do not exceed the maximum voltage rating of the device.

Failure to follow these instructions can result in injury or equipment damage.

Power system description	Meter setting	Symbol	Connection description	Nominal voltage
Single-phase 2-wire line-to-neutral	1PH2W LN	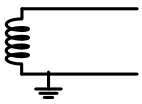	Connect L1 and L2 between phase and neutral.	277 V L-N + 10%
Single-phase 2-wire line-to-line	1PH2W LL	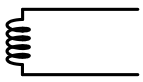	Connect L1 and L2 between the phases.	277 V L-L

Power system description	Meter setting	Symbol	Connection description	Nominal voltage
Single-phase 3-wire line-to-line with neutral	1PH3W LL with N	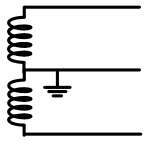	Connect L1 and L2 between any two phases or from any phase to neutral.	277 V L-N + 10% / 415 V L-L + 10%
3-phase 3-wire Delta ungrounded	3PH3W Dlt Ungnd	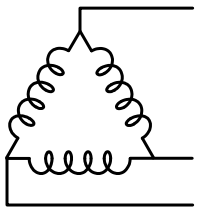	Connect L1 and L2 between any two phases.	277 V L-L
3-phase 3-wire Delta corner grounded	3PH3W Dlt Crnr Gnd	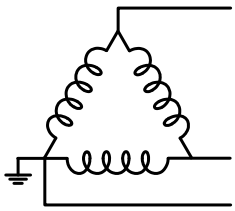	Connect L1 and L2 between any two phases.	277 V L-L
3-phase 3-wire Wye ungrounded	3PH3W Wye Ungnd	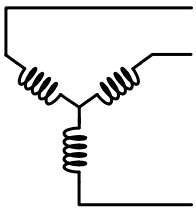	Connect L1 and L2 between any two phases.	277 V L-L
3-phase 3-wire Wye grounded	3PH3W Wye Gnd	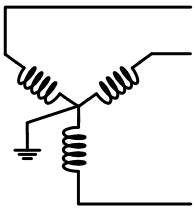	Connect L1 and L2 between any two phases.	415 V L-L + 10%
3-phase 3-wire Wye resistance-grounded with insulation monitoring *	3PH3W Wye Res Gnd	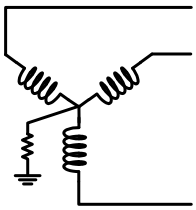	Connect L1 and L2 between any two phases.	415 V L-L + 10%
3-phase 4-wire ungrounded Wye	3PH4W Wye Ungnd	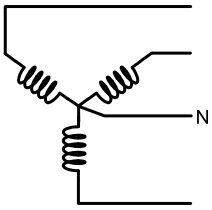	Connect L1 and L2 between any two phases.	277 V L-L

Power system description	Meter setting	Symbol	Connection description	Nominal voltage
3-phase 4-wire grounded Wye	3PH4W Wye Gnd	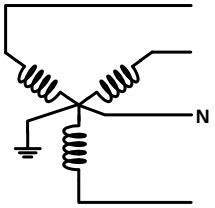	Connect L1 and L2 between any two phases.	277 V L-N / 415 V L-L + 10%
3-phase 4-wire resistance-grounded Wye with insulation monitoring *	3PH4W Wye Res Gnd	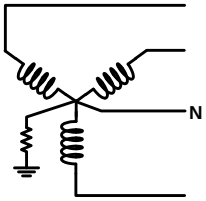	Connect L1 and L2 between any two phases.	277 V L-N / 415 V L-L + 10%
NOTE: * When insulation is monitored, neutral of these systems is considered to be earthed.				

MID/MIR control power (auxiliary power) requirements

Follow the MID/MIR control power (auxiliary power) requirements to help ensure uninterrupted and incorrect meter operation.

NOTICE

UNINTENDED EQUIPMENT OPERATION

- Connect the auxiliary power supply of the meter to the supply (utility) side of the measured circuit.
- Connect the auxiliary power supply in a way that ensures uninterrupted meter operation if one or two phases of the measured circuit become de-energized.
- Use an auxiliary power source, such as a DC station battery or UPS, to provide a power source independent of the measured circuit.
- Use an external 3-phase power supply device as an auxiliary power source if it is energized from all three phases on the supply (utility) side of the measured circuit.

Failure to follow these instructions can result in incorrect meter operation.

3.7.3 Input, output and communications wiring

3.7.3.1 Relay outputs

Relay outputs can be configured to be used in switching applications, for example, to provide on/off control signals for switching capacitor banks, generators, and other external devices and equipment.

⚠WARNING

RISK OF INJURY OR EQUIPMENT DAMAGE

Always apply the same power type (AC or DC) to both the relay outputs.

Failure to follow these instructions can result in death, serious injury, or equipment damage.

The following table lists the relay output configuration:

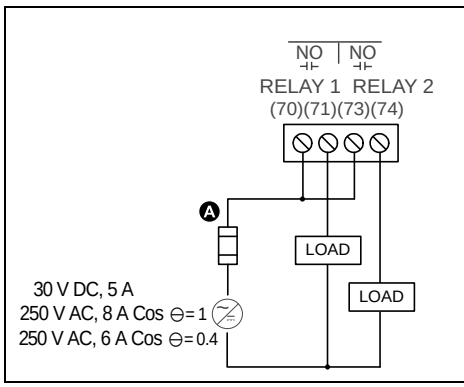

A	The over current protection device must be rated for the short-circuit current at the connection point.

3.7.3.2 Digital inputs/digital outputs

The digital inputs are typically used for monitoring the status of external contacts or circuit breakers. The digital outputs are typically used in switching and demand synchronization applications.

The following table lists the digital input and digital output configuration:

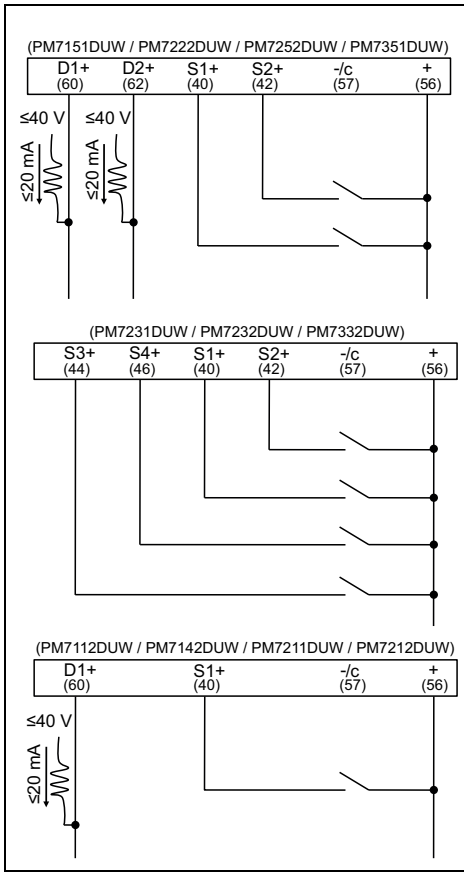

Digital input wiring shown for internal voltage source.

Wetting voltage should not be used as a power source for other devices.

-/c is common for digital outputs, digital inputs, and wetting voltage.

3.7.3.3 RS-485 wiring

Connect the devices on the RS-485 bus in a point-to-point configuration, with the (+) and (-) terminals from one device connected to the corresponding (+) and (-) terminals on the next device.

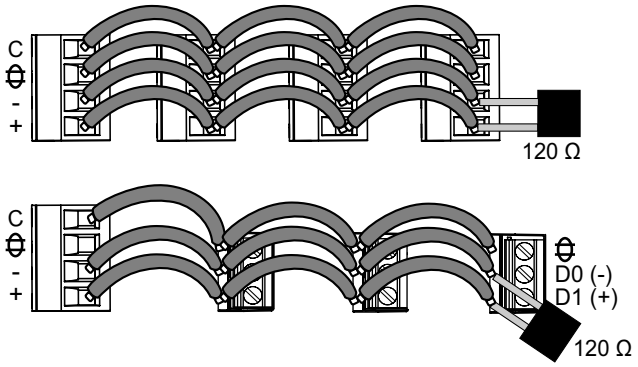

RS-485 cable

Use a shielded 2 twisted pair or 1.5 twisted pair RS-485 cable to wire the devices. Use one twisted pair to connect the (+) and (-) terminals and use the other insulated wire to connect the C terminals.

The total distance for devices connected on an RS-485 bus should not exceed 1200 m (4000 ft).

RS-485 terminals

C	Common. This provides the voltage reference (zero volts) for the data plus and data minus signals
⊖	Shield. Connect the bare wire to this terminal to help suppress signal noise that may be present. Ground the shield wiring at one end only (either at the client or the last server device, but not both).
-	Data minus. This transmits/receives the inverting data signals.
+	Data plus. This transmits/receives the non-inverting data signals.

NOTE: If some devices in your RS-485 network do not have the Common terminal, use the bare wire in the RS-485 cable to connect the Common terminal from the meter to the shield terminal on the devices that do not have the Common terminal.

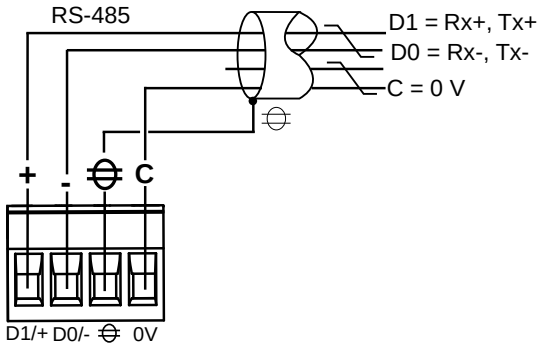

3.7.3.4 Ethernet communication connection

Use a shielded RJ-45 (10/100Base-TX) Ethernet cable to connect the meter's Ethernet port.

Your Ethernet connection source should be installed in a location that minimizes the overall Ethernet cable routing length.

4. Display

4.1 Display overview

The display with the navigation buttons on the meter allows you to perform various tasks such as setting up the meter, displaying data screens, acknowledging alarms, or performing resets.

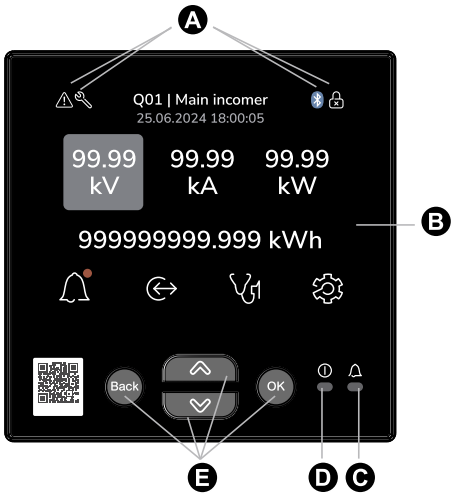

A	Alarm, maintenance, power interruption, Bluetooth connection, firmware upgrade, and lock notification area
B	Display
C	Alarm/energy pulsing LED (Amber)
D	Heartbeat/communications LED (Green)
E	Navigation buttons

4.2 Default data display screen

The default data display screen varies depending on the meter model.

Summary screen for non-MID/MIR meter models

The summary screen is the default screen that displays real-time values for current and voltage, total power, and energy consumption.

Summary screen for MID/MIR meter models

The **Power System** screen is the default screen that displays the power system setting, active tariff, system frequency, and accumulated real energy (delivered + received).

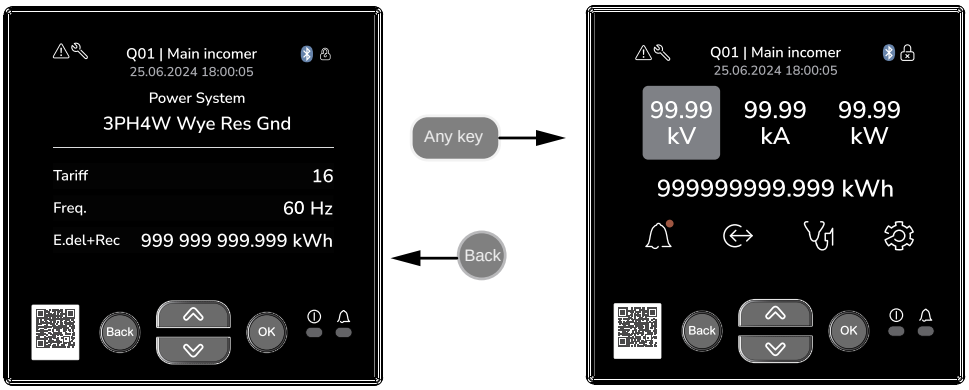

4.3 Display menu icons

The menu icons at the bottom of the display allows you to navigate to the alarm events, inputs/outputs, diagnostics, and settings screens.

Icon	Description
	This icon allows you to navigate to the alarm events screen that displays the active alarms count and history log count.
	This icon allows you to navigate to the digital inputs, digital outputs, and relay outputs screen.
	This icon allows you to navigate to the diagnostics screen that displays the device info, meter status, timer, control power, phasor/polar, date and time, and identification.
	This icon allows you to navigate to the settings screen to configure the meter, communication, alarms, inputs/outputs, date and time, display, reset, and revenue lock parameters.

4.4 Notification icons

To alert you about meter state or events, notification icons appear on the top left (critical and immediate attention) or the top right corner (informational and status-oriented) of the display screen.

Icon	Description
(Displayed only in MID/ MIR compliance meter models)	The control power interruption event icon indicates that a control power (auxiliary power) interruption event has occurred. **NOTE:** The control power interruption event icon takes priority over all other alarm icons.
	The high priority alarm icon (red) blinks while the alarm is active. The alarm icon remains displayed until you acknowledge. This icon indication requires immediate attention.
	The medium or low priority alarm icon (orange) blinks while the alarm is active.
	The wrench icon indicates that meter requires maintenance (meter in an over voltage condition or energy LED in an overrun state).
	The Bluetooth icon indicates the connectivity status.
	The lock icon indicates that the meter is revenue locked.
	The firmware upgrade icon indicates that a firmware upgrade is in progress.

4.5 Meter display language

You can configure the meter to display information on the screen in one of several languages.

The following languages are available:

- English (US)
- French
- Spanish
- German
- Italian
- Portuguese
- Russian
- Chinese
- Hebrew

4.6 Meter screen navigation

The meter buttons and display screen allow you to navigate data, setup screens, and configure the meter's setup parameters.

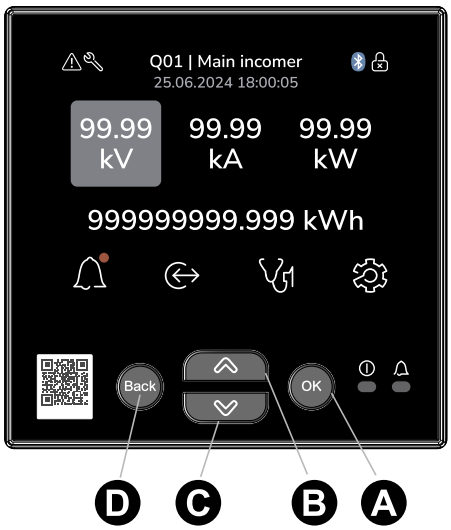

A	**OK** button. Use to select a menu item or confirm an entry or to view more details.
B	Up button. Use to navigate up or increase a number in a numeric setting.
C	Down button. Use to navigate down or decrease a number in a numeric setting.
D	**Back** button. Use to return to the previous screen. For setup screens: • If setup changes are made, press the **Back** button to display the **Apply settings** screen. • If editing a value, press the **Back** button to exit edit mode and restore the previous value.

4.7 Access counter screen

The **Access counter** in the **Settings** screen increments when you change the basic meter setup parameters (See Configuring the basic setup parameters, page 60) or configure CO2 and energy cost rates.

4.8 Button Shortcuts

4.8.1 Resetting the meter to the default language

To reset the meter to the default language:

1. Press and hold the **Back** and **OK** buttons for 5 seconds to reset the meter to the default language (**English (US)**).

4.8.2 Enabling Bluetooth

Use the following shortcuts to enable Bluetooth.

☐ If you are not on the **Settings** screen:

a. Press and hold the **Back** button for 3 seconds.

b. If **Display Passcode** is **Enabled**, enter the **Passcode**, and then press **OK**.

The meter screen shows the **Bluetooth** and **Advertising** options as **Enabled**.

☐ When you are already on the configuration screen:

a. Press and hold the **Back** button for 3 seconds.

The meter screen shows the **Bluetooth** and **Advertising** options as **Enabled**.

4.9 Meter screen menus overview

All meter screens are grouped logically, according to their function. You can access any available meter screen by first selecting the Level 0 (top level) screen that contains it.

Figure 1 - Level 0 screen menus

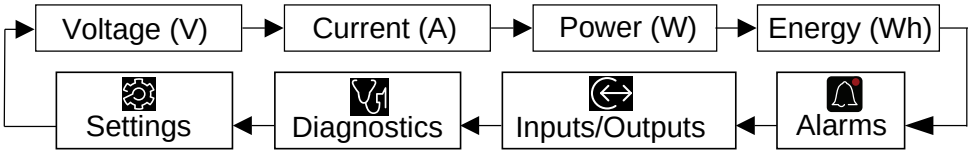

4.10 Menu tree

Use the menu tree to navigate to the parameter or setting you want to view or configure.

The following image summarizes the available meter screens, displaying the IEC menu options along with their corresponding IEEE menu equivalents shown in parentheses [].

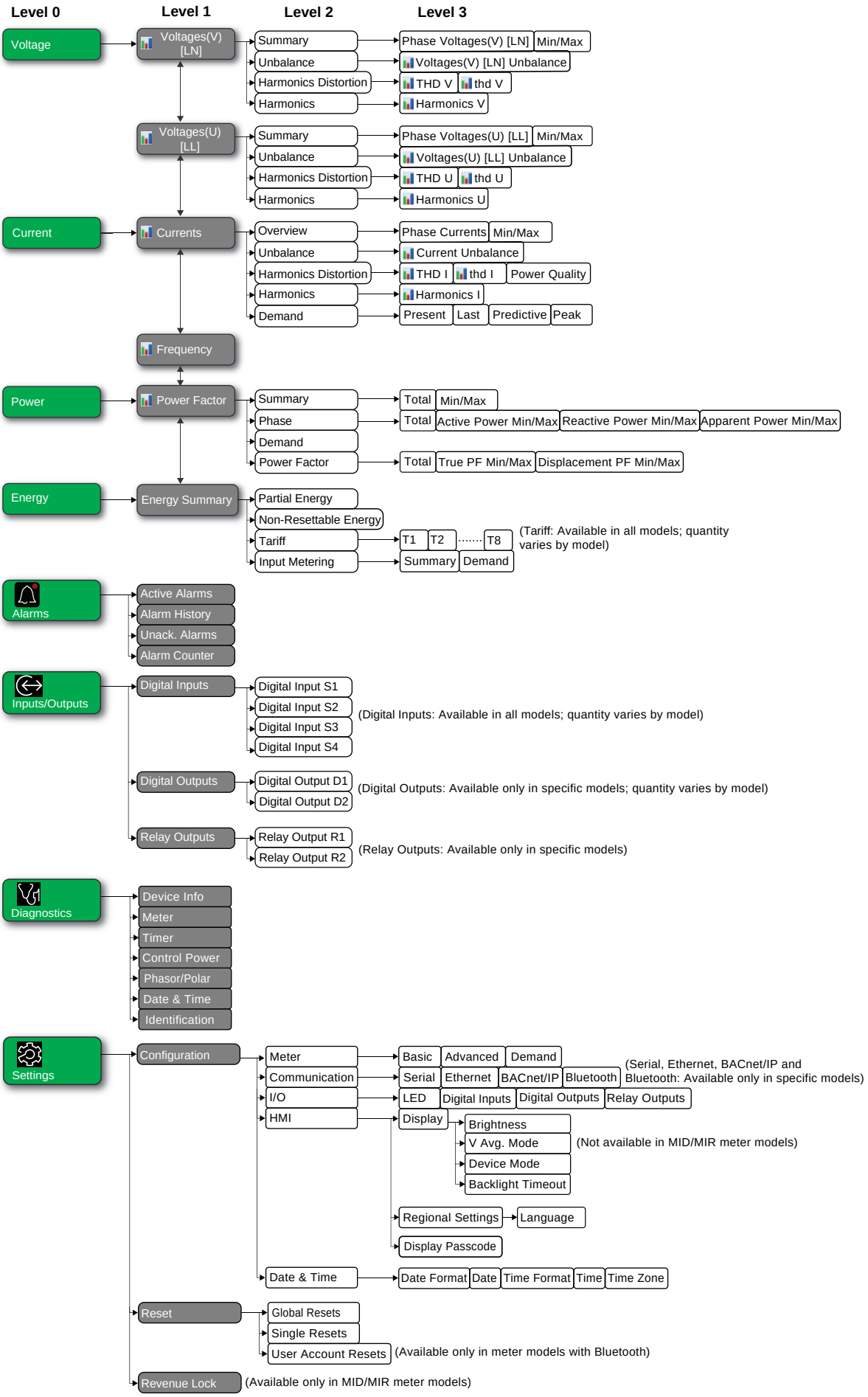
Level 0
Level 1
Level 2
Level 3
Voltage
Voltages(V) [LN]
Summary
Phase Voltages(V) [LN]
Min/Max
Unbalance
Voltages(V) [LN] Unbalance
Harmonics Distortion
THD V
thd V
Harmonics
Harmonics V
Voltages(U) [LL]
Summary
Phase Voltages(U) [LL]
Min/Max
Unbalance
Voltages(U) [LL] Unbalance
Harmonics Distortion
THD U
thd U
Harmonics
Harmonics U
Current
Currents
Overview
Phase Currents
Min/Max
Unbalance
Current Unbalance
Harmonics Distortion
THD I
thd I
Power Quality
Harmonics
Harmonics I
Demand
Present
Last
Predictive
Peak
Frequency
Power
Power Factor
Summary
Total
Min/Max
Phase
Total
Active Power Min/Max
Reactive Power Min/Max
Apparent Power Min/Max
Demand
Power Factor
Total
True PF Min/Max
Displacement PF Min/Max
Energy
Energy Summary
Partial Energy
Non-Resettable Energy
Tariff
T1
T2
T8
(Tariff: Available in all models; quantity varies by model)
Input Metering
Summary
Demand
Alarms
Active Alarms
Alarm History
Unack. Alarms
Alarm Counter
Inputs/Outputs
Digital Inputs
Digital Input S1
Digital Input S2
Digital Input S3
Digital Input S4
(Digital Inputs: Available in all models; quantity varies by model)
Digital Outputs
Digital Output D1
Digital Output D2
(Digital Outputs: Available only in specific models; quantity varies by model)
Relay Outputs
Relay Output R1
Relay Output R2
(Relay Outputs: Available only in specific models)
Diagnostics
Device Info
Meter
Timer
Control Power
Phasor/Polar
Date & Time
Identification
Settings
Configuration
Meter
Basic
Advanced
Demand
Communication
Serial
Ethernet
BACnet/IP
Bluetooth
(Serial, Ethernet, BACnet/IP and Bluetooth: Available only in specific models)
I/O
LED
Digital Inputs
Digital Outputs
Relay Outputs
HMI
Display
Brightness
V Avg. Mode
Device Mode
Backlight Timeout
(Not available in MID/MIR meter models)
Regional Settings
Language
Display Passcode
Date & Time
Date Format
Date
Time Format
Time
Time Zone
Reset
Global Resets
Single Resets
User Account Resets
(Available only in meter models with Bluetooth)
Revenue Lock
(Available only in MID/MIR meter models)

4.10.1 Data display screens

The meter display screens allow you to view meter values and configure settings.

Minimum and maximum value indicators:

- : Displays the minimum recorded value and its timestamp.
- : Displays the maximum recorded value and its timestamp.

The following titles represent the display mode in IEC, with their corresponding IEEE menu equivalents shown in parentheses [].

- Bulleted items indicate sub screens and their descriptions.

Voltages(V) [LN]

Graphical representation of the line-to-neutral voltage for all three phases (**V1 [Van]**, **V2 [Vbn]**, **V3 [Vcn]**).

NOTE: The line-to-neutral voltages (V) [LN] depend on the selected **1PH2W LN**, **1PH3W LL With N**, and **3PH4W** power system type configurations.

For information about individual harmonics up to the 31st, THD, and thd measurements, see Harmonics, page 130.

Summary • **Phase Voltages(V) [LN]** • **Min/Max**	• Summary of line-to-neutral voltage on all three phases (**V1 [Van]**, **V2 [Vbn]**, **V3 [Vcn]**) and the average voltage (**V Avg.**). • Summary of the minimum and maximum values for line-to-neutral voltage on all three phases (**V1 [Van]**, **V2 [Vbn]**, **V3 [Vcn]**) and the average voltage (**V Avg.**) with timestamps.
Unbalance	Summary of the percentage line-to-neutral voltage unbalance (**V Unb**), along with the minimum and maximum values and their timestamps. **NOTE:** The line-to-neutral voltage unbalance (**V Unb**) is not applicable for **1PH** power system type configurations.
Harmonics Distortion • **THD V** • **thd V**	• Summary of THD (ratio of harmonic content to the fundamental) for line-to-neutral voltage on all three phases (**V1 [Van]**, **V2 [Vbn]**, **V3 [Vcn]**) along with the minimum and maximum values with timestamps. • Summary of thd (ratio of harmonic content to the rms value of total harmonic content) for line-to-neutral voltage on all three phases (**V1 [Van]**, **V2 [Vbn]**, **V3 [Vcn]**) along with the minimum and maximum values with timestamps.
Harmonics	Summary of line-to-neutral voltage harmonics data, including numeric magnitude and phase angle for the fundamental, and graphical representation of the 3rd to 15th odd harmonics for each line-to-neutral phase voltage.

Voltages(U) [LL]

Graphical representation of phase line-to-line voltage on all three phase pairs (**U12 [Vab]**, **U23 [Vbc]**, **U31 [Vca]**)

NOTE: The line-to-line voltages (U) [LL] depend on the selected **1PH2W LL**, and **3PH3W** power system type configurations.

For information about individual harmonics up to the 31st, THD, and thd measurements, see Harmonics, page 130.

Summary • **Phase Voltages(U) [LL]** • **Min/Max**	• Summary of phase line-to-line voltage on all three phase pairs (**U12 [Vab]**, **U23 [Vbc]**, **U31 [Vca]**) and the average line-to-line voltage (**U Avg. [V Avg.]**). • Summary of the minimum and maximum values for line-to-line voltage on all three phase pairs (**U12 [Vab]**, **U23 [Vbc]**, **U31 [Vca]**) and the average line-to-line voltage (**U Avg. [V Avg.]**) with timestamps.

Unbalance	Summary of the percentage line-to-line voltage unbalance (**U Unb**), along with the minimum and maximum values and their timestamps. **NOTE:** The line-to-line voltage unbalance (**U Unb**) is not applicable for **1PH** power system type configuration.
Harmonics Distortion • **THD U** • **thd U**	• Summary of THD (ratio of harmonic content to the fundamental) for line-to-line voltage on all three phase pairs (**U12 [Vab]**, **U23 [Vbc]**, **U31 [Vca]**) along with the minimum and maximum values with timestamps. • Summary of thd (ratio of harmonic content to the rms value of total harmonic content) for line-to-line voltage on all three phase pairs (**U12 [Vab]**, **U23 [Vbc]**, **U31 [Vca]**) along with the minimum and maximum values with timestamps.
Harmonics	Summary of line-to-line voltage harmonics data, including numeric magnitude and phase angle for the fundamental, and graphical representation of the 3rd to 15th odd harmonics for each line-to-line phase voltage.

Currents

Graphical representation of each phase current (**(I1 [Ia]**, **I2 [Ib]**, **I3 [Ic]**), along with the neutral current (**In**) and nominal current (Nominal).

NOTE:

- The phase currents (**(I1 [Ia]**, **I2 [Ib]**, **I3 [Ic]**) depends on the **CT on Terminal** selection for **1PH2W LN** and **1PH2W LL** power system type configurations.
- The neutral current (**In**) is available only for **1PH3W LL with N** and **3PH4W** power system type configurations.
- The ground current (**Ig**) is available only for **3PH3W** power system type configurations and when **CT on Terminal** is set to **I1 I2 I3**.

For information about individual harmonics up to the 31st, THD, thd, TDD, and demand measurements, see Harmonics, page 130 and Demand measurements, page 121

Overview • **Phase Currents** • **Min/Max**	• Summary of each phase current (**(I1 [Ia]**, **I2 [Ib]**, **I3 [Ic]**), the neutral current (**In**), the ground current (**Ig**) and the average current (**I Avg.**). • Summary of the minimum and maximum values for each phase current (**(I1 [Ia]**, **I2 [Ib]**, **I3 [Ic]**), the neutral current (**In**), the ground current (**Ig**) and the average current (**I Avg.**) with timestamps.
Unbalance	Summary of the percentage current-unbalance (**I Unb**), along with the minimum and maximum values and their timestamps. **NOTE:** The current-unbalance (**I Unb**) is not applicable for **1PH** power system type configuration.
Harmonics Distortion • **THD I** • **thd I** • **Power Quality**	• Summary of THD (ratio of harmonic content to the fundamental) for each phase current (**(I1 [Ia]**, **I2 [Ib]**, **I3 [Ic]**), the neutral current (**In**), the ground current (**Ig**) along with the minimum and maximum values with timestamps. • Summary of thd (ratio of harmonic content to the rms value of total harmonic content) for each phase current (**(I1 [Ia]**, **I2 [Ib]**, **I3 [Ic]**), the neutral current (**In**), the ground current (**Ig**) along with the minimum and maximum values with timestamps. • Total Demand Distortion (TDD) values in percentage (%). TDD measures the total harmonic current (sum of all harmonic RMS currents) relative to the system's maximum load current.
Harmonics	Summary of current harmonics data, including numeric magnitude and phase angle for the fundamental, and graphical representation of harmonics of the 3rd to 15th odd harmonics for each phase current.
Demand • **Present** • **Last**	• Summary of the present demand interval for each phase current (**(I1 [Ia]**, **I2 [Ib]**, **I3 [Ic]**), the neutral current (**In**), the ground current (**Ig**) and the average current (**I Avg.**). • Summary of the last demand interval for each phase current (**(I1 [Ia]**, **I2 [Ib]**, **I3 [Ic]**), the neutral current (**In**), the ground current (**Ig**) and the average current (**I Avg.**).

• **Predictive**	• Summary of the predicted demand based on the current consumption rate for each phase current (**(I1 [Ia]**, **I2 [Ib]**, **I3 [Ic]**), the neutral current (**In**), the ground current (**Ig**) and the average current (**I Avg.**).
• **Peak**	• Summary of the recorded peak demand for each phase current (**(I1 [Ia]**, **I2 [Ib]**, **I3 [Ic]**), the neutral current (**In**), the ground current (**Ig**) and the average current (**I Avg.**) with timestamps.

Frequency

Graphical representation of the frequency values.

Min/Max Frequency	Summary of the minimum and maximum values for frequency parameters with timestamps.

Power Factor

Graphical representation of the power factor values.

For information about power factor calculation and demand measurements, see Power factor, page 124 and Demand, page 121.

Summary	
• **Total**	• Summary of the power consumption for total active power in kW (**P Total [Active Total]**), total reactive power in kvar (**Q Total [Reac Total]**), and total apparent power in kVA (**S Total [Appr Total]**).
• **Min/Max**	• Summary of the minimum and maximum values for total power consumption, including total active power in kW (**P Total [Active Total]**), total reactive power in kvar (**Q Total [Reac Total]**), and total apparent power in kVA (**S Total [Appr Total]**) with timestamps.
Phase	
• **Total**	• Summary of per phase and total power values for active power **P [Active]** in kW (**P1 [A]**, **P2 [B]**, **P3 [C]**, and **Total**), reactive power **Q [Reac]** in kvar (**Q1 [A]**, **Q2 [B]**, **Q3 [C]**, and **Total**), and apparent power **S [Appr]** in kVA (**S1 [A]**, **S2 [B]**, **S3 [C]**, and **Total**).
• **Active Power Min/Max**	• Summary of the minimum and maximum values for per phase and total active power in kW (**P1 [A]**, **P2 [B]**, **P3 [C]**, and **P Total [Active Total]**) with timestamps.
• **Reactive Power Min/Max**	• Summary of the minimum and maximum values for per phase and total reactive power in kvar (**Q1 [A]**, **Q2 [B]**, **Q3 [C]**, and **Q Total [Reac Total]**) with timestamps.
• **Apparent Power Min/Max**	• Summary of the minimum and maximum values for per phase and total apparent power in kVA (**S1 [A]**, **S2 [B]**, **S3 [C]**, and **S Total [Appr Total]**) with timestamps.
Demand	Summary of demand values for the current demand interval (**Present**), the previous demand interval (**Last**), and the predicted demand interval (**Predictive**) based on the current power consumption rate and the recorded peak power demand (**Peak**) value with timestamp for active power demand (**Pd [Wd]**), reactive power demand (**Qd [VARd]**) and apparent power demand (**Sd [VAd]**).
Power Factor	
• **Total**	• Summary of true power factor and displacement power factor values for each phase (**PF1 [PFa]**, **PF2 [PFb]**, **PF3 [PFc]**) and total (**PF Total**).
• **True PF Min/Max**	• Summary of the minimum and maximum true power factor values with timestamps for each phase (**PF1 [PFa]**, **PF2 [PFb]**, **PF3 [PFc]**) and total (**PF Total**).
• **Displacement PF Min/Max**	• Summary of the minimum and maximum displacement power factor values with timestamps for each phase (**PF1 [PFa]**, **PF2 [PFb]**, **PF3 [PFc]**) and total (**PF Total**).

Energy Summary

Summary of the delivered active energy (**P Del**), delivered reactive energy (**Q Del**), and delivered apparent energy (**S Del**) values.

NOTE: You can read multi-tariffs **T9** to **T16** only through communication.

For information about energy measurements, multi-tariff measurements, and input metering measurements, see Energy, page 120, Multi-tariff, page 112, and Input metering, page 102.

Partial Energy	Summary of accumulated values for delivered (**Del**), received (**Rec**), delivered plus received (**D +R**), and delivered minus received (**D-R**) for partial active energy in Wh (**P [Active]**), partial apparent energy in varh (**Q [Reac]**), and partial reactive energy in VAh (**S [Appr]**).
Non-Resettable Energy	Summary of accumulated values for delivered (**Del**), received (**Rec**), delivered plus received (**D +R**), and delivered minus received (**D-R**) for active energy in Wh (**P [Active]**), apparent energy in varh (**Q [Reac]**), and reactive energy in VAh (**S [Appr]**).
Tariff • **T1** to **T8**	***(Available in all models; quantity varies by model.)*** Summary of the multi-tariffs (**T1** to **T8**): • Active energy delivered (**Del**) and received (**Rec**) in Wh (**P [Active]**) for the selected multi-tariff. • Reactive energy delivered (**Del**) and received (**Rec**) in varh (**Q [Reac]**) for the selected multi-tariff. • Apparent energy delivered (**Del**) and received (**Rec**) in VAh (**S [Appr]**) for the selected multi-tariff.
Input Metering • **Summary** • **Demand**	• Summary of energy accumulations for the input metering channels (**Inp Mtr Chan 1** to **Inp Mtr Chan 4**). • Summary of the last demand, present demand, predicted demand, and peak demand for the input metering channels (**Inp Mtr Chan 1** to **Inp Mtr Chan 4**).

Alarms

For information about alarms, see Alarms, page 104.

Active Alarms	List of all active alarm events with a date/timestamp for each event. Each alarm displays the severity, start time, event, phase, and threshold value.
Alarm History	Historical list of all acknowledged alarm events with a date/timestamp for each event. Each alarm displays the start time, event, phase, and threshold value.
Unack. Alarms	List of all unacknowledged alarm events.
Alarm Counter	Total number of occurrences for each alarm type.

Inputs/Outputs

For information about digital input, digital output, and relay output applications, see Digital inputs, page 101, Digital outputs, page 101, and Relay outputs, page 102.

Digital Inputs • **Digital Input S1** • **Digital Input S2** • **Digital Input S3** • **Digital Input S4**	***Available in all models; quantity varies by model.*** Status (**ON** or **OFF**) of the selected digital input. Counter shows the total number of detected off-to-on state transitions . Timer shows the total duration (in seconds) during which the digital input remains in the on state.
Digital Outputs • **Digital Output D1** • **Digital Output D2**	***(Available only in specific models; quantity varies by model.)*** Status (**ON** or **OFF**) of the selected digital output. Counter shows the total number of detected off-to-on state transitions. Timer shows the total duration (in seconds) during which the digital output remains in the on state.
Relay Outputs • **Relay Output R1** • **Relay Output R2**	***(Available only in specific models.)*** Status (**ON** or **OFF**) of the selected relay output. Counter shows the total number of detected off-to-on state transitions . Timer shows the total duration (in seconds) during which the relay output remains in the on state.

Diagnostics

For information about meter status (diagnostic codes) and control power (auxiliary power) interruption events, see Meter status, page 91 and Control power (auxiliary power) interruption event, page 88

Device Info	***Bluetooth firmware information is available only in specific models*** Displays the meter model, serial number, date of manufacture, firmware version (including OS - Operating System, RS - Reset System and OS CRC (Cyclic Redundancy Check)), language firmware, and Bluetooth firmware. The OS CRC value is a number (Hexadecimal format) that identifies the uniqueness between different OS firmware versions.
Meter	Displays the meter diagnostic status.
Timer	**Active Load Timer** counter that keeps track of the total number of days, hours, minutes, and seconds an active load is connected to the meter inputs. **Operating Timer** counter for the total number of days, hours, minutes, and seconds the meter has been powered.
Control Power	**Non-MID/MIR meter models:** The control power screen displays how many times the meter lost control power (number of losses) and the last power down event with the timestamp. **MID/MIR meter models:** The control power screen displays how many times the meter lost control power (number of losses) and the last power up and power down events with the timestamp.
Phasor/Polar	**Phasor**: Displays a graphical representation of the power system the meter is monitoring. **Polar**: Displays the numeric magnitude and angles of all voltage and current phases.
Date & Time	Displays the date and time.
Identification	Displays a QR code containing the meter information.

Settings

Configuration • **Meter**	• Meter configuration screens: ◦ **Basic**: Screen to define the power system configuration, including VT connection, VT primary and secondary values, CT terminal assignment, CT primary and secondary values, nominal frequency and phase rotation. See Configuring the basic setup parameters, page 60. ◦ **Advanced**: Screen to set up the active load timer and define the peak demand current for TDD calculations. See Configuring the advanced setup parameters, page 62. ◦ **Demand**: Screen to set up the power demand, current demand, and input metering demand. See Configuring the demand calculations, page 63.
• **Communication**	***(Serial, Ethernet, BACnet/IP, and Bluetooth: Available only in specific models.)***

	• Communication configuration screens: ◦ **Serial**: Screen to configure the serial RS-485 parameters. See Configuring the serial communications, page 64. ◦ **Ethernet**: Screen to configure the Ethernet parameters. See Configuring the Ethernet communications, page 65. ◦ **BACnet/IP**: Screen to configure the BACnet/IP objects. See Configuring the BACnet/IP settings, page 67. ◦ **Bluetooth**: Screen to configure the Bluetooth. See Configuring Bluetooth, page 68.
• **I/O**	• Screens to set up the I/O parameters: ◦ **LED**: Screen to set up the alarm/energy pulsing LED. See Configuring the alarm/energy pulsing LED, page 69. ◦ **Digital Inputs**: Screen to set up the digital inputs. See Configuring the digital inputs, page 70. ◦ **Digital Outputs**: Screen to set up the digital outputs. See Configuring the digital outputs, page 71. ◦ **Relay Outputs**: Screen to set up the relay outputs. See Configuring the relay outputs, page 73.
• **HMI** ◦ **Display** ◦ **Regional Settings** ◦ **Display Passcode**	• Screens to configure the HMI parameters: ◦ Screen to configure display settings. See Configuring the display settings, page 74. – **Brightness**: Screen to adjust the brightness of the display. – **V Avg. Mode (Not available in MID/MIR meter models**): Screen to select the type of average voltage you want the meter to display on the summary screen. – **Device Mode**: Screen to configure regional settings (IEC or IEEE). – **Backlight Timeout**: Screen to configure how long the device's backlight stays on before turning off when inactive. ◦ **Language**: Screen to set up the meter language settings. See Configuring the regional settings, page 75. ◦ **Settings**: Screen to configure display passcode for settings screen. See Configuring the display passcode, page 59.
• **Date & Time** ◦ **Date Format** ◦ **Date** ◦ **Time Format** ◦ **Time** ◦ **Time Zone**	• Screen to set up the meter date, time, and time zone. See Configuring date and time, page 75.
Reset	
• **Global Resets**	Screens to perform a global reset. See Performing global resets, page 76.
• **Single Resets**	Screens to perform a single reset. See Performing single resets, page 76.
• **User Account Resets**	**(Available only in meter models with Bluetooth)** Screen to reset user accounts. See Performing user account resets, page 77.
Revenue Lock	**(Available only in MID/MIR meter models)** Screen for revenue lock. See Locking or unlocking revenue meter, page 78.

5. Cybersecurity

5.1 Overview

This chapter contains information about your product's cybersecurity. Network administrators, system integrators and personnel that commission, maintain or dispose of a device should:

- Apply and maintain the device's security capabilities. See Device security capabilities, page 51 for details.
- Review assumptions about protected environments. See Protected environment assumptions, page 52 for details.
- Address potential risks and mitigation strategies. See Potential risks and compensating controls, page 53 for details.
- Follow recommendations to optimize cybersecurity.

Your device has security capabilities that:

- Allow it to be part of a NERC CIP compliant facility. Go to the North American Electric Reliability Corporation website for information on NERC Reliability Standards.
- Align with cybersecurity standards in the IEC 62443 international standard for business IT systems and Industrial Automation and Control Systems (IACS) products. Go to the International Electrotechnical Commission website for information about the IEC 62443 international standard.

⚠ WARNING

POTENTIAL COMPROMISE OF SYSTEM AVAILABILITY, INTEGRITY, AND CONFIDENTIALITY

- Set a display passcode to help reduce the risk of unauthorized physical access to the meter.
- Disable unused ports/services and default accounts, where possible, to minimize pathways for malicious attacks.
- Place networked devices behind multiple layers of cyber defenses (such as firewalls, network segmentation, and network intrusion detection and protection).
- Use cybersecurity best practices (for example: least privilege, separation of duties) to help prevent unauthorized exposure, loss, modification of data and logs, interruption of services, or unintended operation.

Failure to follow these instructions can result in death, serious injury, or equipment damage.

5.2 Cybersecurity in Schneider Electric

Introduction

Cybersecurity is integral to Schneider Electric's business strategy, and it follows a cybersecurity posture that covers many aspects:

- Securing internal activities,
- Providing elevated levels of protection of strategic IT systems and assets,
- Leading the digital transformation within a cybersecure framework,
- Designing and developing new products and solutions with end-to-end cybersecure measures and protection.

Schneider Electric is preparing for the 2027 Cyber Resilience Act (CRA) as part of our ongoing commitment to cybersecurity. This effort supports compliance with EU requirements and helps strengthen our global cybersecurity posture.

Cybersecurity policies

To support the development and maintenance of products, Schneider Electric follows a Secure Development Lifecycle (SDL) compliant with the IEC 62443-4-2 Security Standard for Industrial Automation and Control systems.

It consists in implementing a process relying on security best practices, dedicated tools that covers:

- Security training for teams involved in the product design, development, and testing,
- Threat modeling analysis and security design reviews,
- Static code analysis and code security reviews,
- Periodic penetration and vulnerability testing,
- Stringent vulnerability management process.

5.3 Cybersecurity resources

Cybersecurity Solutions

For recommendations and guidance on how to help secure the environment and infrastructure in which the power meter is deployed, Schneider Electric publishes guidelines, white papers, and best practices that can be consulted in the Cybersecurity Solutions page of Schneider Electric global website.

Cybersecurity Support Portal

In addition, other resources can be found in Schneider Electric Cybersecurity Support Portal, including:

- Schneider Electric vulnerability management policy,
- Security Notifications about vulnerabilities in products and systems.

Schneider Electric’s vulnerability management policy addresses Cybersecurity vulnerabilities affecting Schneider Electric products to help support the security of our customers. Schneider Electric works collaboratively with researchers, Cyber Emergency Response Teams (CERTs), and asset owners to help ensure that accurate information is provided in a timely fashion to protect customer installations. Schneider Electric’s Corporate Product CERT (CPCERT) is responsible for managing and alerting on vulnerabilities and mitigations affecting products. The Cybersecurity Support Portal also provides interfaces to report Cybersecurity vulnerabilities and to register for the security notification updates mailing list to stay informed through email on newly released or updated Security Notifications.

5.4 Product defense-in-depth

Use a layered network approach with multiple security and defense controls in your IT and control system to minimize data protection gaps, helps reduce single-point-of-failure and create a strong cybersecurity posture. The more layers of security in your network, the harder it is to breach defenses, take digital assets or cause disruption.

Place the device behind a secure firewall to protect against unauthorized access and potential cyber threats.

5.4.1 Device security capabilities

Information confidentiality

These security capabilities help protect the confidentiality of information through secure protocols that help prevent unauthorized users from reading information in transit.

Bluetooth channel encryption provides confidentiality of information transmitted over the wireless interface.

Physical security (MID/MIR meter models)

These security features, together with perimeter security, help prevent unauthorized access to revenue-related parameters and settings and provide evidence of physical tampering with the device, such as the revenue lock icon on the display, which indicates whether the device is revenue locked.

Bluetooth user authentication

Access to the Bluetooth interface is secured and requires users to authenticate using the password.

Display security

Access to the configuration screen is secured through a display passcode authorization mechanism.

Firmware authenticity and integrity

Secure boot process ensures firmware integrity through verification at meter start-up.

Firmware upgrades are validated using digital signature verification based on asymmetric cryptographic techniques.

Debugging and testing interfaces are permanently disabled to prevent unauthorized access.

Modbus/BACnet configuration write protection

Enabling write protection disables all Modbus/BACnet/IP write operations and configuration changes.

Bluetooth pairing and encryption

During Bluetooth pairing, the devices securely exchange encryption keys. These keys are used to protect the communication channel, ensuring both data confidentiality and integrity.

Bluetooth user account locking (protection against repeated unauthorized access attempts)

The meter locks for 4 minutes after five consecutive invalid login attempts through the EcoStruxure™ Power Device (EPD) application. After 4 minutes, the meter unlocks automatically. To unlock the meter immediately, perform a power cycle.

Display passcode locking (protection against repeated unauthorized access attempts)

The meter locks for 4 minutes after five consecutive invalid login attempts using the display. To reset the display passcode, see Resetting the display passcode using the product reset, page 59.

Bluetooth user account password and meter display passcode policies

The Bluetooth user account password for EcoStruxure™ Power Device (EPD) application must meet the following requirements:

- Between 8 to 32 characters in length
- Include at least one number, one uppercase character, one lowercase character and one special character
- Must not contain the Username
- Do not use restricted characters such as: " [ ] : ; | = + * ? < > / \ ,

The meter display passcode for accessing the configuration screen must be a 6-digit numeric value between **000000** and **999999** and must meet the following requirements:

- Must contain at least two different digits (for example, 111111 is invalid; 911111 is valid).
- Must not use sequential digits in ascending or descending order (for example, 345678 and 876543 are invalid).

Secure activation of network and wireless interfaces

Modbus TCP/IP and BACnet/IP network communication protocols can be enabled or disabled through the display. The Bluetooth wireless interface can also be enabled or disabled through the display

Approved cryptography algorithms

ECC p-241 for asymmetric keys.

Symmetric encryption using AES128.

Hashing functions using SHA256.

True random number generator.

5.4.2 Protected environment assumptions

- Cybersecurity governance – available and up-to-date guidance on governing the use of information and technology assets in your company.
- Perimeter security – installed devices, and devices that are not in service, are in an access-controlled or monitored location.

- Emergency power – the control system provides the capability to switch to and from an emergency power supply without affecting the existing security state or a documented degraded mode.
- Firmware upgrades – meter upgrades are implemented consistently to the current version of firmware.
- Controls against malware – detection, prevention, and recovery controls to help protect against malware are implemented and combined with appropriate user awareness.
- Physical network segmentation – the control system provides the capability to:
  - Physically segment control system networks from non-control system networks.
  - Physically segment critical control system networks from non-critical control system networks.
- Logical isolation of critical networks – the control system provides the capability to logically and physically isolate critical control system networks from non-critical control system networks. For example, using VLANs.
- Independence from non-control system networks – the control system provides network services to control system networks, critical or non-critical, without a connection to non-control system networks.
- Encrypt protocol transmissions over all external connections using an encrypted tunnel, TLS wrapper or a similar solution.
- Zone boundary protection – the control system provides the capability to:
  - Manage connections through managed interfaces consisting of appropriate boundary protection devices, such as: proxies, gateways, routers, firewalls, and encrypted tunnels.
  - Use an effective architecture, for example, firewalls protecting application gateways residing in a DMZ.
  - Control system boundary protections at any designated alternate processing sites should provide the same levels of protection as that of the primary site, for example, data centers.
- No public internet connectivity – access from the control system to the internet is not recommended. If a remote site connection is needed, for example, encrypt protocol transmissions.
- Resource availability and redundancy – ability to break the connections between different network segments or use duplicate devices in response to an incident.
- Manage communication loads – the control system provides the capability to manage communication loads to mitigate the effects of information flooding types of DoS (Denial of Service) events.
- Control system backup – available and up-to-date backups for recovery from a control system failure.

5.4.3 Potential risks and compensating controls

Address potential risks using these compensating controls:

Area	Issue	Risk	Compensating controls
Display passcode	Display passcode is not set.	If you do not set the display passcode, unauthorized users can gain access to the meter.	Set a 6-digit display passcode to help reduce the risk of unauthorized access.
Secure protocols	Modbus TCP/IP, BACnet/IP, DPWS protocols are unsecure. The device does not have the capability to transmit encrypted data using these protocols.	If a malicious user gained access to your network, they could intercept communications.	For transmitting data over an internal network, physically or logically segment the network. For transmitting data over an external network, encrypt protocol transmissions over all external connections using an encrypted tunnel, TLS wrapper or a similar solution. **NOTE:** Enabling DPWS allows clients to discover the device on the local network. DPWS does not permit device configuration changes, firmware updates, user management, or access to sensitive data.
Modbus write protection	Write protection is not enabled.	Unauthorized users can modify network configuration settings, which can affect system integrity and operation.	Enable write protection for Modbus and BACnet/IP communication. **NOTE:** Security-related settings can be modified only through the meter display by authorized users.
Modbus RTU/TCP	Modbus RTU/TCP communication is enabled when not required.	Unauthorized users can access meter data and configuration, increasing exposure to unauthorized changes or data.	Disable the Modbus RTU/TCP communication when not in use. **NOTE:** Security-related settings can be modified only through the meter display by authorized users.

5.5 Default settings

Area	Setting	Default
Communication protocols	Modbus TCP/IP	Enabled
	Modbus RTU	Enabled
	BACnet/IP	Disabled
	DPWS	Enabled
	Bluetooth	Disabled
	IPv4	Enabled
	IPv6	Disabled
Configuration	Using the display	Enabled
	Using the PowerLogic™ Engineering Suite	Enabled
	Using Modbus programming or interface	Enabled

5.6 Bluetooth user account and display passcode

The Bluetooth user account password for EcoStruxure™ Power Device (EPD) application is a critical security credential that controls access to wireless communication with the meter. This password must meet defined complexity requirements to ensure secure pairing and data exchange. The meter supports a configurable display passcode to access the configuration screen through the device display. This display passcode help prevent unauthorized local access.

Bluetooth user account

Each meter has a unique, factory-set default Bluetooth user account password, which is printed on the product label and also displayed on the meter screen. After the first login using EcoStruxure™ Power Device (EPD), it is recommended that users change the factory-set default password and update it periodically to enhance security. To reset the EcoStruxure™ Power Device (EPD) user account password, refer to Performing user account resets, page 77.

NOTE: The Bluetooth user account password does not expire.

Display passcode

NOTICE

UNAUTHORIZED ACCESS TO THE DEVICE

Set a display passcode to help reduce the risk of unauthorized physical access to the meter.

Failure to follow these instructions can result in data loss or changes to the device configuration.

NOTICE

IRRECOVERABLE DISPLAY PASSCODE

Record your display passcode in a secure location.

Failure to follow these instructions can result in data loss.

It is recommended to enable the display passcode during initial configuration. The display passcode for accessing the configuration screen must be a 6-digit numeric value between **000000** and **999999**:

See Configuring the display passcode, page 59 for instructions on how to change the display passcode.

5.7 Hardening

Recommendations to optimize cybersecurity in a protected environment:

- Review assumptions about protected environments and address potential risks and mitigation strategies.
- Change the display passcode. See Configuring the display passcode, page 59 for details.
- Bluetooth user account locking: protection against repeated unauthorized access attempts.
- Enable the write protection to disable all Modbus and BACnet/IP write operations and configuration changes.
- Least functionality principle can be applied to prohibit and restrict the use of unnecessary functions, protocols, or services.
- Disable communication protocol ports when they are not in use. This helps reduce the attack surface.
- Regularly download the Certificate Revocation List (CRL) regularly from the Schneider Electric security server and install it in the Microsoft Certificate Store to maintain secure communication and validate certificate authenticity.

5.8 Bluetooth pairing and device recognition

The meter supports pairing with only one mobile application at a time. You can disconnect the paired device either through the meter display or the mobile application.

5.9 Enabling and disabling communication protocols

Using the display

See Configuring the serial communications, page 64 for instructions on how to change the serial settings for your meter.

See Configuring the Ethernet communications, page 65 for instructions on how to enable/disable Modbus TCP, DPWS, IPv4 and IPv6 settings for your meter.

See Configuring the BACnet/IP settings, page 67 for instructions on how to change the BACnet/IP settings for your meter.

See Configuring Bluetooth, page 68 for instructions on how to change the Bluetooth settings for your meter.

Using the PowerLogic™ Engineering Suite

See the PowerLogic™ Engineering Suite configuration guide (7EN02-0505) for instructions on how to enable/disable communication protocols for your meter.

5.10 Reporting a security incident or vulnerability

To report suspicious activity or a cybersecurity incident, go to the Schneider Electric Report an Incident website.

To report a security vulnerability affecting your product or solution, go to the Schneider Electric Report a Vulnerability website.

5.11 Firmware upgrades

When meter firmware is upgraded - security configuration remains the same until changed, including user accounts and display passcode. It is recommended to review security configuration after an upgrade to analyze privileges for new or changed device features and revoke or apply them according to your company policies and standards.

Use the Modbus interface to perform the firmware upgrade.

Refer to the PowerLogic™ Engineering Suite configuration guide (7EN02-0505) for the firmware upgrade procedure.

5.12 Secure disposal guidelines

Use the *Secure disposal checklist* when disposing a device to help prevent potential disclosure of data.

5.12.1 Secure disposal checklist

- **Record activities**: Document disposal actions according to your company policies and standards to keep a record of activities.
- **Decommission related rules and sanitize records**:
  - Follow decommission and sanitization tasks as described by your organization or contact your network administrator.
  - Decommission network and security rules, for example, a firewall rule that could be used to get past the firewall.
  - Perform records tracking sanitization tasks to remove records in related systems, for example, monitoring SNMP servers.
- **Disposal and reuse**: See Disposal and reuse, page 57 for more information.

5.12.1.1 Disposal and reuse

Before removing the device from its intended environment, follow the *Secure disposal guidelines* in this document.

Follow device removal tasks described by your organization or contact your network administrator to determine a responsible method of disposal.

Dispose the device according to the legislation of the country. Some regulatory organizations include:

- The United States Environmental Protection Agency (EPA) for guidance on the sustainable management of electronics.
  - The EPA provides an Electronic Product Environmental Assessment Tool (EPEAT) that helps assess the environmental attributes of electronics.
- The European Waste Electrical & Electronic Equipment Directive (WEEE Directive) is the Community directive on Waste Electrical and Electronic Equipment.
- The European Restriction of Hazardous Substances Directive (RoHS) directive on the restriction of the use of certain hazardous substances in electrical and electronic equipment.

NOTICE

UNAUTHORIZED OR UNINTENDED ACCESS TO CONFIDENTIAL DATA

- Store devices that are not in service in an access-controlled or monitored location.
- Physically destroy devices that are decommissioned.

Failure to follow these instructions can result in unauthorized or unintended access to sensitive or secure customer data.

Device disposal

It is recommended that the entire device is physically destroyed. Destroying the device helps prevent potential disclosure of data contained in the device that was not removed.

Device reuse

Store the device in a location that is access controlled or monitored if there is potential for reuse.

6. Configuring

6.1 Configuring using the display

6.1.1 Enabling or disabling the display passcode during initial startup

During device startup, you can enable or disable the display passcode to control access to the **Settings** screen.

NOTE: You can enable the display passcode during initial device startup or later from the **Settings** screen.

NOTICE
UNAUTHORIZED ACCESS TO THE DEVICE Set a display passcode to help reduce the risk of unauthorized physical access to the meter. **Failure to follow these instructions can result in data loss or changes to the device configuration.**

NOTICE
IRRECOVERABLE DISPLAY PASSCODE Record your display passcode in a secure location. **Failure to follow these instructions can result in data loss.**

To enable or disable the display passcode during initial startup:

1. Power on the meter.
2. To enable the display passcode protection:
   a. When prompted with **For device operation security, set a display passcode to access product settings.**, select **Yes** and press **OK**.
   b. Set and confirm a new 6-digit display passcode (between **000000** and **999999**), and then press **OK**.

      NOTE:

      The display passcode:

      - Must contain at least two different digits (for example, 111111 is invalid; 911111 is valid).
      - Must not use sequential digits in ascending or descending order (for example, 345678 and 876543 are invalid).

      The display passcode is set. Use the display passcode to access the **Settings** screen.
3. To disable the display passcode protection:
   a. Scroll to **No**, and press **OK**.

      NOTE: You can enable the display passcode later from the **Settings** screen. See Configuring the display passcode, page 59 for instructions on how to enable the display passcode.

      The display passcode protection is disabled. Users can access **Settings** screen without a passcode.

6.1.2 Configuring the display passcode

Use the **HMI** setup screen to enable or disable the display passcode or to change the passcode.

RECOMMENDATION: Enable or change the display passcode to help prevent unauthorized access to protected screens, such as configuration, reset, and revenue lock.

NOTICE

UNAUTHORIZED ACCESS TO THE DEVICE

Set a display passcode to help reduce the risk of unauthorized physical access to the meter.

Failure to follow these instructions can result in data loss or changes to the device configuration.

NOTICE

IRRECOVERABLE DISPLAY PASSCODE

Record your display passcode in a secure location.

Failure to follow these instructions can result in data loss.

To enable or disable the display passcode or to change the passcode:

1. Navigate to **Settings**.
2. If **Display Passcode** is **Enabled**, enter the **Passcode**, and then press **OK**.
3. Navigate to **Configuration > HMI > Display Passcode** and press **OK**.
4. Scroll through the parameters you need to modify, and then press **OK**.

Table 9 - Settings screen passcode

Parameter	Values	Description
Passcode Status	**Enabled** **Disabled**	Enable or disable the display passcode to access the settings screen.
Change Passcode	**000000** to **999999**	This parameter is available only when the **Passcode Status** is enabled. Set the 6-digit display passcode to access the meter settings screen.

6.1.3 Resetting the display passcode using the product reset

If the user forgets the display passcode, use the product reset to set a new display passcode to access the **Settings** screen.

NOTE:

- Resetting the product restores user settings to factory defaults. The reset does not affect energy counters.
- For MID/MIR meter models, if the meter has revenue lock enabled, you cannot reset the display passcode.

NOTICE

UNAUTHORIZED ACCESS TO THE DEVICE

Set a display passcode to help reduce the risk of unauthorized physical access to the meter.

Failure to follow these instructions can result in data loss or changes to the device configuration.

NOTICE

LOSS OF ACCESS TO METER CONFIGURATION

Store the display passcode and the revenue lock passcode in a secure location for MID/MIR meter models.

Failure to follow these instructions can result in loss of access to the meter configuration.

NOTICE

IRRECOVERABLE DISPLAY PASSCODE

Record your display passcode in a secure location.

Failure to follow these instructions can result in data loss.

To reset a forgotten display passcode using product reset:

1. Reboot the meter.

   The meter initializes and displays the home screen.

2. Within 10 seconds after the summary screen appears, press and hold ⌃ and **OK** for 3 seconds.

   The **Reset Settings** screen appears and displays the message **Do you want to perform product reset?**.

3. Select **Yes** and press **OK**.

   A confirmation screen appears and displays the message **Product reset will permanently delete all settings. This action cannot be undone. Continue?**.

4. Select **Yes** and press **OK**.

   The **Product reset in progress...** screen appears.

5. When prompted with **For device operation security, set a display passcode to access product settings.**, select **Yes** and press **OK**.

6. Set and confirm a new 6-digit display passcode (between **000000** and **999999**) and then press **OK**.

   The display passcode is set. Use the display passcode to access the **Settings** screen.

6.1.4 Configuring the basic setup parameters

Proper configuration of the meter's basic setup parameters is essential for accurate measurement and calculations. Use the **Basic** screen to configure the basic meter parameters.

NOTE: If the standard (1-sec) alarms have been configured and you make subsequent changes to the meter's basic setup, all alarms are disabled to prevent undesired alarm operation.

⚠ WARNING

UNINTENDED EQUIPMENT OPERATION

- Verify that all standard alarms settings are correct and adjust, as necessary.
- Re-enable all configured alarms.

Failure to follow these instructions can result in death, serious injury, or equipment damage.

After saving the changes, confirm that all configured standard alarm settings are still valid, reconfigure them as required, and then re-enable the alarms.

To configure the basic setup parameters:

1. Navigate to **Settings**.
2. If **Display Passcode** is **Enabled**, enter the **Passcode**, and then press **OK**.
3. Navigate to **Configuration > Meter > Basic**.
4. Scroll through the parameters you need to modify, and then press **OK**.
5. Scroll through the options and press **OK** to confirm the new setting.

Table 10 - Basic setup parameter settings (Voltage and current measurement circuits)

Parameter	Values	Description
Power System	Select the power system type (power transformer) the meter is wired to.	
	1PH2W LN	Single-phase 2-wire line-to-neutral.
	1PH2W LL	Single-phase 2-wire line-to-line.
	1PH3W LL with N	Single-phase 3-wire line-to-line with neutral.
	3PH3W Dlt Ungnd	3-phase 3-wire ungrounded delta.
	3PH3W Dlt Crnr Gnd	3-phase 3-wire corner grounded delta.
	3PH3W Wye Ungnd	3-phase 3-wire ungrounded wye.
	3PH3W Wye Gnd	3-phase 3-wire grounded wye.
	3PH3W Wye Res Gnd	3-phase 3-wire resistance-grounded wye.
	3PH4W Opn Dlt Ctr Tp	3-phase 4-wire center-tapped open delta.
	3PH4W Dlt Ctr Tp	3-phase 4-wire center-tapped delta.
	3PH4W Wye Ungnd	3-phase 4-wire ungrounded wye.
	3PH4W Wye Gnd (Default)	3-phase 4-wire grounded wye.
	3PH4W Wye Res Gnd	3-phase 4-wire resistance-grounded wye.
VT Connect	Select how many voltage transformers (VT) are connected to the electrical power system.	
	Direct Connect (Default)	Direct connect. No VTs are used.
	1 VT	1 voltage transformer for single-phase power system type.
	Delta 2 VT	Delta 2 voltage transformers.
	Wye 3 VT	Wye 3 voltage transformers.
VT Primary	**20** to **1000000** Default: **120**	**NOTE:** Applies only when **VT Connect** is selected to **DELTA 2 VT** or **WYE 3 VT**. Enter the size of the VT primary, in Volts.
VT Secondary	**20** to **690** Default: **120**	**NOTE:** Applies only when **VT Connect** is selected to **DELTA 2 VT** or **WYE 3 VT**. Select the size of the VT secondary, in Volts.
CT on Terminal	Define how many current transformers (CT) are connected to the meter, and to which terminals they are connected.	
	I1	1 CT connected to I1 terminal

Table 10 - Basic setup parameter settings (Voltage and current measurement circuits) (Continued)

Parameter	Values	Description
	I2	1 CT connected to I2 terminal
	I3	1 CT connected to I3 terminal
	I1 I2	2 CT connected to I1, I2 terminals
	I2 I3	2 CT connected to I2, I3 terminals
	I1 I3	2 CT connected to I1, I3 terminals
	I1 I2 I3 (Default)	3 CT connected to I1, I2, I3 terminals
CT Primary	**1** to **32767** Default: **5**	Enter the size of the CT primary, in Amps.
CT Secondary	**1** **5** Default: **5**	Select the size of the CT secondary, in Amps.
Nominal Frequency	**50** **60** Default: **50**	Select the frequency of the electrical power system, in Hertz.
Phase Rotation	**ABC** **CBA** Default: **ABC**	Select the phase rotation of the 3-phase system.
NOTE: Configure the VT nominal and CT nominal settings using PowerLogic™ Engineering Suite.		

6. Press **Back** to display the **Apply settings** screen.
7. Select **Yes, apply** and press **OK** to apply the settings.

6.1.5 Configuring the advanced setup parameters

Use the **Advanced** screen to configure the load timer setpoint and peak current demand.

To configure the advanced setup parameters:

1. Navigate to **Settings**.
2. If **Display Passcode** is **Enabled**, enter the **Passcode**, and then press **OK**.
3. Navigate to **Configuration > Meter > Advanced**.
4. Scroll through the parameters you need to modify, and then press **OK**.
5. Scroll through the options and press **OK** to confirm the new setting.

Table 11 - Advanced setup parameter settings

Parameter	Values	Description
Label	—	Read-only. Use the PowerLogic™ Engineering Suite configuration tool to change the meter label.
Load Timer Setpt	**0** to **10** x CT ratio Default: **5**	Set the minimum average load current in Amps required to start the timer. The meter counts the number of seconds the load timer is ON when the measured current is equal to or greater than this value.
Pk I dmd for TDD	**0** to **10** x CT ratio Default: **0**	Set the minimum peak load current demand in Amps required for inclusion in total demand distortion (TDD) calculations. When the load current is below this demand threshold, the meter does not use the readings to calculate TDD. Set this value to “0” (zero) to use the metered peak current demand for the calculation.

6. Press **Back** to display the **Apply settings** screen.

7. Select **Yes, apply** and press **OK** to apply the settings.

6.1.6 Configuring the demand calculations

Use the **Demand** screen to configure the power, current, and input metering demands. Demand is a measure of average consumption over a fixed time interval.

For information about demand, see Demand measurements, page 121.

To configure the demand calculations:

1. Navigate to **Settings**.
2. If **Display Passcode** is **Enabled**, enter the **Passcode**, and then press **OK**.
3. Navigate to **Configuration > Meter > Demand**.
4. Scroll through the parameters you need to modify, and then press **OK**.
5. Scroll through the options and press **OK** to confirm the new setting.

   NOTE:
   - You cannot configure the relay outputs for demand setup.
   - You can configure the same digital input to support power demand, current demand, and input demand.

Table 12 - Demand calculation setup parameter settings

Parameter		Values	Description
Power Demand **Current Demand** **Input Demand**	**Method**	**Thermal** **Timed Sliding Block** **Timed Block** (Default) **Timed Rolling Block** **Input Sync Block** **Input Sync Roll Block** **Cmd Sync Block** **Cmd Sync Roll Block** **Clock Sync Block** **Clock Sync Roll Block**	Select the appropriate demand calculation method.
	Interval	**1** to **60** Default: **15**	Set the demand interval, in minutes. For clock synchronization methods, specify an interval that divides 1440 minutes (24x60) evenly.
	Subinterval	**1** to **60** Default: **15**	**NOTE:** Applies only to **Timed Rolling Block**, **Input Sync Roll Block**, **Cmd Sync Roll Block** and **Clock Sync Roll Block** methods. Define the number of subintervals to divide demand interval equally, in minutes.
	Digital Output	**NONE** (Default) **Digital Output D1** **Digital Output D2**	Select the digital output to send the end of demand interval pulse.

Table 12 - Demand calculation setup parameter settings (Continued)

Parameter		Values	Description
	Digital Input	**NONE** (Default) **Digital Input S1** **Digital Input S2** **Digital Input S3** **Digital Input S4**	**NOTE:** Applies only to **Input Sync Block** and **Input Sync Roll Block** methods. Select the digital input used to synchronize demand.
	Clock Sync Time	**0** to **23:59 HH:MM**	**NOTE:** Applies only to **Clock Sync Block** and **Clock Sync Roll Block** methods (these synchronize the demand interval to the meter's internal clock). Define the time-of-day to synchronize the demand, from the start of the day. For example, set this setting to 0730 to synchronize demand at 7:30 AM. **NOTE:** Clock sync time is common for **Current Demand**, **Power Demand**, and **Input Demand**.

6. Press **Back** to display the **Apply settings** screen.
7. Select **Yes, apply** and press **OK** to apply the settings.

6.1.7 Configuring the serial communications

Available only in specific models.

Use the **Serial** setup screen to configure the RS-485 communication to use software to access the meter's data or configure the meter remotely.

For information about serial communications, see Configuring the serial communications, page 64.

To configure the serial communications:

1. Navigate to **Settings**.
2. If **Display Passcode** is **Enabled**, enter the **Passcode**, and then press **OK**.
3. Navigate to **Configuration > Communication > Serial**.
4. Scroll through the parameters you need to modify, and then press **OK**.
5. Scroll through the options and press **OK** to confirm the new setting.

Table 13 - Serial communication settings

Parameter	Values	Description
Modbus RTU	**Disabled** **Enabled** Default: **Enabled**	Enable or disable the Modbus communication.
Modbus Write Protection	**Disabled** **Enabled** Default: **Disabled**	Enable or disable the Modbus write protection.
Address	**1** to **247** Default: **1**	Set a unique address for the device within the communications loop.

Table 13 - Serial communication settings (Continued)

Parameter	Values	Description
Baud Rate	**38400** **19200** **9600** **4800** Default: **19200**	Select the data transmission speed. The baud rate must be the same for all devices in the communications loop.
Parity	**Even** **Odd** **None With One** **None With Two** Default: **Even**	Select the parity mode. Select **None With One** or **None With Two** if the parity bit is not used. Use the same parity setting for all devices in the communication loop.

6. Press **Back** to display the **Apply settings** screen.
7. Select **Yes, apply** and press **OK** to apply the settings.

6.1.8 Configuring the Ethernet communications

Available only in specific models.

Use the **Ethernet** setup screen to assign the meter a unique IP address to use software to access the meter's data or configure the meter remotely.

NOTE:

- To enable network communication, the meter requires either IPv4 or IPv6. By default, IPv6 is disabled. If you disable IPv4 without enabling IPv6, the device cannot communicate on the network.
- Over Modbus TCP, the Unit ID supports the values **1** and **255**.

For information about Ethernet communications, see Configuring the Ethernet communications, page 65.

Prerequisites:

Obtain the meter's IP address information from your network administrator or IT department. For more information about managing IPv4 address conflicts, refer IPv4 address conflict detection, page 95.

NOTICE

LOSS OF COMMUNICATION ON THE NETWORK

- Assign a unique IP addresses to each device on the network.
- Avoid duplicate static IP address configurations.
- Configure only one active DHCP server per network segment.
- Verify the network configuration if repeated conflicts occur.

Failure to follow these instructions can result in an IP address conflict and loss of communication on network.

To configure the Ethernet communications:

1. Navigate to **Settings**.
2. If **Display Passcode** is **Enabled**, enter the **Passcode**, and then press **OK**.
3. Navigate to **Configuration > Communication > Ethernet**.
4. Scroll through the parameters you need to modify, and then press **OK**.
5. Scroll through the options and press **OK** to confirm the new setting.

Table 14 - Ethernet communication settings

Parameter	Values	Description
Modbus TCP	**Disabled** **Enabled** Default: **Enabled**	Enable or disable the Modbus TCP communication. **NOTE:** Only authorized users can disable Modbus TCP communication through the meter display.
Modbus Write Protection	**Disabled** **Enabled** Default: **Disabled**	Enable or disable the Modbus write protection. **NOTE:** Only authorized users can disable Modbus write protection through the meter display.
MAC ID	—	Read-only. Displays the meter's factory-programmed MAC address.
Device Name	—	Read-only. By default, the device name can be used as a DNS hostname that maps to the IP address assigned by the DHCP server.
DPWS	**Disabled** **Enabled** Default: **Enabled**	Enable or disable the DPWS.
IPv4 Status	**Disabled** **Enabled** Default: **Enabled**	Enable or disable the IPv4 address.
IPv4 Filtering Status	**Disabled** **Enabled** Default: **Disabled**	Use the PowerLogic™ Engineering Suite configuration tool or the Modbus command interface to enable IPv4 address filtering and assign the designated level of access. **NOTE:** You can disable this setting using the meter display.
IPv4 Mode	**DHCP** **BOOTP** **Static** Default: **Static**	Select how the meter obtains its IPv4 address: **DHCP**, **BOOTP**, or **Static**. **DHCP**: The meter acquires its IP address from your network's DHCP server. **BOOTP**: Uses Bootstrap Protocol. **Static**: Uses the IPv4 address, subnet mask, and gateway that you manually enter.
IPv4 Address	**0** to **255**	Set the IPv4 address of your meter. Example: **169.254.x.x**, where `x.x` is derived from the last two digits of the MAC address. Contact your local network administrator for parameter values.
IPv4 Subnet Mask	**0** to **255** Default: **255.255.255.0**	Set the IPv4 subnet mask of your network. Contact your local network administrator for parameter values.
IPv4 Gateway	**0** to **255**	Set the IPv4 gateway address of your network. Example: **169.254.x.x**, where `x.x` is derived from the last two digits of the MAC address Contact your local network administrator for parameter values.
IPv6 Status	**Disabled** **Enabled** Default: **Disabled**	Enable or disable the IPv6 address.
IPv6 Filtering Status	**Disabled** **Enabled** Default: **Disabled**	Use the PowerLogic™ Engineering Suite configuration tool or Modbus command interface to enable IPv6 address filtering and assign the designated level of access. **NOTE:** You can disable this setting using the meter display.
IPv6 Mode	**Static**	Read-only. Mode through which the meter obtains its IPv6 address. **Static**: Displays the previously configured IPv6 global address and IPv6 gateway address from PowerLogic™ Engineering Suite. The link local address depends on the MAC ID of the meter.
IPv6 Link Local Address	—	Read-only. Displays the IPv6 link local address. Derived from the fe80::/64 prefix and the MAC address. Assigned for communication between nodes on the same link. **Example**: `fe80:0000:0000:0000:0280:67ff:fe90:e540`

Table 14 - Ethernet communication settings (Continued)

Parameter	Values	Description
IPv6 Global Address	—	Read-only. Displays the IPv6 global address. Prefix 2001:0db8:85a3:0000::/64, with the remaining 64 bits derived from the MAC address. Assigned for communication across the Internet or large-scale networks. **Example**: `2001:0db8:85a3:0000:0000:0080:6790:e540`
IPv6 Gateway	—	Read-only. Displays the IPv6 gateway address. **Example**: `2001:0db8:85a3:0000:0000:0000:0000:0001`

6. Press **Back** to display the **Apply settings** screen.
7. Select **Yes, apply** and press **OK** to apply the settings.

6.1.9 Configuring the BACnet/IP settings

Available only in specific models.

Use the **BACnet/IP** screen to configure the BACnet/IP settings. Your meter supports specific BACnet components and standard objects.

For information about supported BACnet/IP features, see Supported BACnet features, page 97.

To configure the BACnet/IP settings:

1. Navigate to **Settings**.
2. If **Display Passcode** is **Enabled**, enter the **Passcode**, and then press **OK**.
3. Navigate to **Configuration > Communication > BACnet/IP**.
4. Scroll through the parameters you need to modify, and then press **OK**.
5. Scroll through the options and press **OK** to confirm the new setting.

Table 15 - BACnet/IP settings

Parameter	Values	Description
BACnet/IP	**Disabled** **Enabled** Default: **Disabled**	Enable or disable the BACnet/IP communication.
BACnet/IP Write Protection	**Disabled** **Enabled** Default: **Enabled**	Enable or disable the BACnet/IP write protection.
Device ID	**1** to **4194302** Default: A unique ID derived from the device serial number.	Enter the ID of the meter on your BACnet network. The ID must be unique on the network.
UDP Port	**1024** to **65355** Default: **47808**	Enter the port the meter uses for BACnet/IP communications.
BBMD	**Disabled** **Enabled** Default: **Disabled**	Enable or disable the registration of the meter as a foreign device.
BBMD IP	**0** to **255** Default: **000.000.000.000**	Enter the IP address of the BACnet/IP Broadcast Management Device (BBMD), if you use BBMD on your network. Contact your local network administrator for parameter values.

Table 15 - BACnet/IP settings (Continued)

Parameter	Values	Description
BBMD Port	**1024** to **65355** Default: **47808**	Enter the port number that is used for communications with the BBMD.
BBMD TTL	**0** to **65355** Default: **600**	Enter the length of time (in seconds) the BBMD keeps an entry for this device in its foreign device table.

6. Press **Back** to display the **Apply settings** screen.
7. Select **Yes, apply** and press **OK** to apply the settings.

6.1.10 Configuring Bluetooth

Use **Bluetooth** screen to configure the Bluetooth communication.

Available only in specific models.

To enable Bluetooth using a shortcut, see Enabling Bluetooth, page 41.

NOTE:

- By default, the Bluetooth communication is **Disabled**.
- The meter supports pairing with only one mobile application at a time. You can disconnect the paired device either through the meter display or the mobile application.
- Keep the mobile device within 3 m (10 ft) of the meter and in the same electrical room for Bluetooth communication.

To configure the Bluetooth:

1. Navigate to **Settings**.
2. If **Display Passcode** is **Enabled**, enter the **Passcode**, and then press **OK**.
3. Navigate to **Configuration > Communication > Bluetooth**.
4. Select **Bluetooth**, scroll to **Enabled**, and press **OK** to activate Bluetooth.

   Result: The **Advertising** option appears.
5. Scroll to **Advertising** and select **Enabled** to start Bluetooth **Advertising**.
6. Select **Yes** and then press **OK** to activate Bluetooth **Advertising**.
7. Press **OK** to continue.

   Result: The Bluetooth icon in the upper-right corner of the meter display blinks every second to show that the meter is available for pairing.

   NOTE: The device is discoverable for only 180 seconds after Bluetooth advertising is activated.
8. On your mobile device, enable **Bluetooth**.
9. Select the meter **PM7•••** from the device list on your mobile. Verify that the **PIN: XXXXXX** displayed on the mobile is the same as the PIN displayed on the meter.
10. On the meter, select **Confirm** and press **OK**. Then, on your mobile, select **Pair** to start the pairing process.

    Result: The Bluetooth icon stops blinking after pairing is completed. When pairing is successful, the **Advertising** option on the meter display changes to **Pairing Status: Paired** after 3 seconds.

    NOTE: The pairing process may take approximately 30 seconds.

Table 16 - Bluetooth settings

Parameter	Values	Description
Bluetooth	**Disabled** **Enabled** Default: **Disabled**	Enable or disable Bluetooth.
Default Password	—	Read-only. A unique, factory-set Bluetooth user account password is displayed on the meter. Use this password the first time you login to EcoStruxure™ Power Device (EPD). To help protect your meter, it is recommended to change the factory-set password after the first login and update it periodically. The unique, factory-set Bluetooth user account password remains visible on the meter even after you change the EcoStruxure™ Power Device (EPD) password.
Advertising	**Disabled** **Enabled** Default: **Disabled**	Enable or disable Bluetooth advertising.

6.1.11 Configuring the alarm/energy pulsing LED

Use the **LED** screen to configure the meter LED for alarming or energy pulsing applications.

For information about alarm/energy pulsing LED, see Configuring the alarm/energy pulsing LED, page 69.

To configure the alarm/energy pulsing LED:

1. Navigate to **Settings**.
2. If **Display Passcode** is **Enabled**, enter the **Passcode**, and then press **OK**.
3. Navigate to **Configuration > I/O > LED**.
4. Scroll through the parameters you need to modify, and then press **OK**.
5. Scroll through the options and press **OK** to confirm the new setting.

Table 17 - Alarm/energy pulsing LED settings

Parameter	Values	Description
OFF	—	Select **OFF** to disable the LED.
Alarms	—	Select **Alarms** to configure the LED for alarm notification. In this mode, the LED flashes with a 1-second ON and 1-second OFF cycle.
Energy		Select **Energy** to configure the LED for energy pulsing.

Table 17 - Alarm/energy pulsing LED settings (Continued)

Parameter	Values	Description
• **Pulse Weight**	**1** to **9999999** Default: **1**	Define the pulse weight for energy pulsing. This parameter specifies the number of pulses sent to the LED for every 1 kWh, 1 kvarh or 1 kVAh of accumulated energy. **NOTE:** This setting is ignored when the LED mode is set to **Alarms**.
• **Channel**	**Active Del** **Active Rec** **Active Del + Rec** **Reactive Del** **Reactive Rec** **Reactive Del + Rec** **Apparent Del** **Apparent Rec** **Apparent Del + Rec** Default: **Active Del**	Select the accumulated energy parameter to monitor and use for LED energy pulsing. **NOTE:** This setting is ignored when the LED mode is set to **Alarms**.

6. Press **Back** to display the **Apply settings** screen.
7. Select **Yes, apply** and press **OK** to apply the settings.

6.1.12 Configuring the digital inputs

Digital inputs are typically used for monitoring the status of external contacts or circuit breakers. Use the **Digital Inputs** screen to configure the digital inputs.

RECOMMENDATION: PowerLogic™ Engineering Suite to configure the digital inputs, as setup parameters that require text entry can only be modified using PowerLogic™ Engineering Suite.

For information about digital input applications, see Digital inputs, page 101.

To configure the digital inputs:

1. Navigate to **Settings**.
2. If **Display Passcode** is **Enabled**, enter the **Passcode**, and then press **OK**.
3. Navigate to **Configuration > I/O > Digital Inputs**.
4. Scroll through the parameters you need to modify, and then press **OK**.
5. Scroll through the options and press **OK** to confirm the new setting.

   NOTE:

   - A digital input can be associated with a single function: alarm, demand, input metering or multi-tariff.
   - A digital input can be associated with a supported combination, such as demand and alarm, or tariff and alarm.

Table 18 - Digital input settings

Parameter		Values	Description
Digital Input S1 **Digital Input S2** **Digital Input S3** **Digital Input S4**	**Label**	—	Read-only. Use the PowerLogic™ Engineering Suite configuration tool to assign names to the digital inputs.
	Debounce Time	**10** to **1000** Default: **10**	Enter the debounce duration for which the external signal must remain stable to be considered valid. Allowable values are increments of 10 (example: 10, 20, 30 up to 1000 ms). Debounce is the time delay that compensates for mechanical contact bounce.

Table 18 - Digital input settings (Continued)

Parameter		Values	Description
	Control Mode	**Normal** (Default)	Read-only. Use PowerLogic™ Engineering Suite or Modbus communication to select this mode if the digital input operates as a normal input when it is associated with a digital input alarm or not linked to any other meter function. In this mode, the meter counts and records the number of incoming pulses. For information about digital input alarms, see Digital alarms, page 104.
		Demand Sync	Read-only. Use PowerLogic™ Engineering Suite or Modbus communication to select this mode if the digital input is associated to an input synchronization demand function. The meter uses the incoming pulse to align its demand period with the external source. For information about input demand synchronization, see Synchronized demand, page 122.
		Multi-tariff	Read-only. Use PowerLogic™ Engineering Suite or Modbus communication to select this mode if the digital input is associated with the multi-tariff function. For information about multi-tariff measurements, see Multi-tariff, page 112.
		Input Metering	Read-only. Use PowerLogic™ Engineering Suite or Modbus communication to select this mode if the digital input is associated with one of the input metering channels. The meter counts and records the number of incoming pulses and related consumption data associated with the pulses. For information about input metering measurements, see Input metering, page 102.

6. Press **Back** to display the **Apply settings** screen.
7. Select **Yes, apply** and press **OK** to apply the settings.

6.1.13 Configuring the digital outputs

Available only in specific models.

Digital outputs are typically used in switching applications, for example, to provide on/off control signals for switching capacitor banks, generators, and other external devices and equipment. Use the **Digital Outputs** screen to configure the digital outputs.

RECOMMENDATION: Use PowerLogic™ Engineering Suite to configure the digital outputs, as setup parameters that require text entry can only be modified using PowerLogic™ Engineering Suite.

For information about digital output applications, see Digital outputs, page 101.

To configure the digital outputs:

1. Navigate to **Settings**.
2. If **Display Passcode** is **Enabled**, enter the **Passcode**, and then press **OK**.
3. Navigate to **Configuration > I/O > Digital Outputs**.
4. Scroll through the parameters you need to modify, and then press **OK**.
5. Scroll through the options and press **OK** to confirm the new setting.

Table 19 - Digital output settings

Parameter		Values	Description
Digital Output D1 **Digital Output D2**	**Label**	—	Read-only. Use the PowerLogic™ Engineering Suite configuration tool to assign names to the digital outputs.
	Control Mode	**External** (Default)	Select this mode if the digital output is controlled remotely through PowerLogic™ Engineering Suite or by a PLC using communication commands.
		Demand Sync	Select this mode if the digital output is associated with a demand function. The meter sends a pulse to the digital output port at the end of each demand interval.
		Alarm	Select this mode if the digital output is associated with an alarm. The meter sends a pulse to the digital output port when the alarm is triggered.
		Energy	Select this mode if the digital output is associated with energy pulsing.
	Behavior Mode	**Normal** (Default)	**NOTE:** When **Control Mode** is set to **Energy**, the **Behavior Mode** is fixed to **Normal**. Select this mode when the control mode is set to**External** or **Alarm**. In **External** mode, the digital output remains ON until an OFF command is sent by the computer or PLC. In **Alarm** mode, the digital output remains ON until the drop-out point is crossed.
		Timed	**NOTE:** When **Control Mode** is set to **Demand Sync**, the **Behavior Mode** is fixed to **Timed**. Select this mode for the digital output to remain ON for the duration specified in the time setup register.
		Coil-Hold	Select this mode when the control mode is set to **External** or **Alarm**. For a unary alarm associated with a digital output, set **Behavior Mode** to **Coil-Hold**. The output turns ON when the “energize” command is received and turns OFF when the “coil hold release” command is received. After a control power loss, the output restores its previous state.
	On-Time	**1** to **9999** Default: **1**	**NOTE:** Applies when **Behavior Mode** is set to **Timed**. Set the pulse width duration (ON time) in seconds. In energy mode, the ON time for the digital output pulse is fixed at 20 ms.
	Demand System	**Power** (Default) **Current** **Input Metering**	**NOTE:** Applies when **Control Mode** is set to **Demand-Sync**. Select the demand system to monitor.
	Alarms	All available alarms	**NOTE:** Applies when **Control Mode** is set to **Alarm**. Select one or more alarms to monitor.
	Pulse per k_h	**1** to **9999999** Default: **1**	**NOTE:** Applies when **Control Mode** is set to **Energy**. Define how many pulses are sent to the LED for every 1 kWh, 1 kvarh or 1 kVAh of accumulated energy.

Table 19 - Digital output settings (Continued)

Parameter		Values	Description
	Channel	**Active Del** (Default) **Active Rec** **Active Del + Rec** **Reactive Del** **Reactive Rec** **Reactive Del + Rec** **Apparent Del** **Apparent Rec** **Apparent Del + Rec**	Select the accumulated energy parameter to monitor and use for LED energy pulsing.
	Pulse Width	**20** **25** **50** **100** Default: **20**	Select the pulse width duration in milliseconds.

6. Press **Back** to display the **Apply settings** screen.
7. Select **Yes, apply** and press **OK** to apply the settings.

6.1.14 Configuring the relay outputs

Available only in specific models.

Relay outputs can be configured to be used in switching applications. Use the **Relay Outputs** screen to configure the relay outputs.

RECOMMENDATION: Use PowerLogic™ Engineering Suite to configure the relay outputs, as setup parameters that require text entry can only be modified using software.

For information about relay output applications, see Relay outputs, page 102.

To configure the relay outputs:

1. Navigate to **Settings**.
2. If **Display Passcode** is **Enabled**, enter the **Passcode**, and then press **OK**.
3. Navigate to **Configuration > I/O > Relay Outputs**.
4. Scroll through the parameters you need to modify, and then press **OK**.
5. Scroll through the options and press **OK** to confirm the new setting.

Table 20 - Relay output settings

Parameter		Values	Description
Relay Output R1 **Relay Output R2**	**Label**	—	Read-only. Use the PowerLogic™ Engineering Suite configuration tool to assign names to the relay outputs.
	Control Mode	**External** (Default)	Select this mode if the relay output is controlled remotely through PowerLogic™ Engineering Suite or by a PLC using communication commands.
		Alarm	Select this mode if the relay output is associated with an alarm. The meter sends a pulse to the relay output port when the alarm is triggered.
	Behavior Mode	**Normal** (Default)	Select this mode when the control mode is set to **External** or **Alarm**. In **External** mode, the relay

Table 20 - Relay output settings (Continued)

Parameter		Values	Description
			output is closed state until an open command is sent by the computer or PLC. In **Alarm** mode, remains in the closed state until the drop-out point is crossed.
		Timed	Select this mode for the relay output to remain ON for the duration specified in the time setup register.
		Coil-Hold	Select this mode when the control mode is set to **External** or **Alarm**. For a unary alarm associated with a relay output, set **Behavior Mode** to **Coil-Hold**. The output turns ON when the "energize" command is received and turns OFF when the "coil hold release" command is received. After a control power loss, the output restores its previous state.
	On-Time	**1** to **9999** Default: **1**	**NOTE:** Applies when **Behavior Mode** is set to **Timed**. Set the pulse width duration (ON time) in seconds. In energy mode, the ON time for the relay output pulse is fixed at 20 ms.
	Alarms	All available alarms	Select one or more alarms to monitor. Applies when **Control Mode** is set to **Alarm**.

6. Press **Back** to display the **Apply settings** screen.
7. Select **Yes, apply** and press **OK** to apply the settings.

6.1.15 Configuring the display settings

Use the **HMI** setup screen configure the display screen settings such as brightness, type of average voltage, and standard convention (IEC or IEEE).

NOTE: Average voltage feature (**V Avg. Mode**) is not available in MID/MIR meter models.

To configure the display settings:

1. Navigate to **Settings**.
2. If **Display Passcode** is **Enabled**, enter the **Passcode**, and then press **OK**.
3. Navigate to **Configuration > HMI > Display**.
4. Scroll through the parameters you need to modify, and then press **OK**.
5. Scroll through the options and press **OK** to confirm the new setting.

Table 21 - Display settings

Parameter	Values	Description
Brightness	**10** (Dimmest) to **100** (Brightest) Default: **80**	Adjust the value to change the display brightness.
V Avg. Mode	**Auto** (Default)	Set this mode to **Auto** to display the Vavg on the summary screen as either the average line-to-line or line-to-neutral voltage, based on the wiring configuration.
	Voltage L-L	Set this mode to **Voltage L-L** to display the Vavg on the summary screen as line-to-line voltage. Line-to-line voltage: max 690 V L-L. If the selected wiring configuration does not have line-to-line voltage to be measured, the Vavg parameter on the summary screen shows a sequence of asterisks (*****).
	Voltage L-N	Set this mode to **Voltage L-N** to display the Vavg on the summary screen as line-to-neutral voltage. Line-to-neutral voltage: max 400 V L-N.

Table 21 - Display settings (Continued)

Parameter	Values	Description
		If the selected wiring configuration does not have line-to-neutral voltage to be measured, the Vavg parameter on the summary screen shows a sequence of asterisks (*****).
Device Mode	**IEC** **IEEE** Default: **IEC**	Select the standards convention for displaying menu names or meter data.
Backlight Timeout	**0** to **60** Default: **15**	Set the duration (in minutes) after which the screen turns off due to inactivity.

6.1.16 Configuring the regional settings

Use the **HMI** setup screen to configure the regional settings such as language for the meter to display.

To configure the regional settings:

1. Navigate to **Settings**.
2. If **Display Passcode** is **Enabled**, enter the **Passcode**, and then press **OK**.
3. Navigate to **Configuration > HMI > Regional Settings**.
4. Press **OK** to continue.
5. Scroll through the options and press **OK** to confirm the new setting.

Table 22 - Regional settings

Parameter	Values	Description
Language	**English (US)** (Default) **Spanish** **Francais** **Italiano** **Portugues** **German** **Russian** **Chinese** **Hebrew**	Select the language for the meter display. **NOTE:** To reset the meter to the default language (**English (US)**), press and hold the **Back** and **OK** buttons for 5 seconds.

6. Select **Yes, apply** and press **OK** to apply the settings.

6.1.17 Configuring date and time

Use the **Date & Time** screen to configure the date and time.

To configure date and time:

1. Navigate to **Settings**.
2. If **Display Passcode** is **Enabled**, enter the **Passcode**, and then press **OK**.
3. Navigate to **Configuration > Date & Time**.
4. Scroll through the parameters you need to modify, and then press **OK**.
5. Scroll through the options and press **OK** to confirm the new setting.

Table 23 - Date and time settings

Parameter	Values	Description
Date Format	**DD.MM.YY** **MM.DD.YY** (Default) **YY.MM.DD**	Set the date to be displayed in DD.MM.YY or MM.DD.YY or YY.MM.DD format.
Date	—	Read-only. Date displayed as per the date format selected.
Time Format	**24-Hour** (Default) **12-Hour**	Set the time to be displayed in 24-Hour or 12-Hour (AM/PM) format.
Time	—	Read-only. Time displayed as per the time format selected.
Time Zone	**GMT** (Default) **Local**	Select GMT or Local.
GMT Offset	**±HH.0**	Set the GMT offset between ±00.0 and ±12.0. Applies only when meter **Time Zone** is set to **Local**.

6.1.18 Performing global resets

Use the **Reset** screen for performing the global reset to clear the meter initialization, energy values, demand values, minimum/maximum values, alarm counters and logs, I/O counters and logs, and input metering values.

For information about global resets, see Meter resets, page 103.

To perform global resets:

1. Navigate to **Settings**.
2. If **Display Passcode** is **Enabled**, enter the **Passcode**, and then press **OK**.
3. Navigate to **Reset > Global Resets**.
4. Scroll through the parameters you need to reset, and then press **OK**.
5. Select **Reset** and press **OK** to confirm.

Table 24 - Global resets

Parameter	Description
Meter Initialization	Clears all partial energy, demand, min/max values, data logs, alarm logs and counters, I/O counters and timers, and load operation timer. It is common practice to initialize the meter after its configuration is completed, before adding it to an energy management system. After configuring all the meter setup parameters, navigate through the different meter display screens and make sure the displayed data is valid, then perform meter initialization.
Energies	Clears all partial accumulated energy values.
Demands	Clears all power, current and input metering demands.
Min/Max	Clears all minimum and maximum values.
Alarm Counters and Logs	Clears all alarm event queues, alarm history, alarm counts and logs.
I/O Counts & Logs	Clears all I/O counters and timers.
Input Metering	Clears all input metering data.

6.1.19 Performing single resets

Use the **Reset** screen to clear data in a specific register or register type.

Single resets are often combined to allow you to clear all data of a similar type, for example, a kWh, kvar, and kVA reset may be combined into an energy reset that clears all the meter's energy logs.

For information about single resets, see Meter resets, page 103.

To perform single resets:

1. Navigate to **Settings**.
2. If **Display Passcode** is **Enabled**, enter the **Passcode**, and then press **OK**.
3. Navigate to **Reset > Single Resets**.
4. Scroll through the parameters you need to reset, and then press **OK**.
5. Select **Reset** and press **OK** to confirm.

Table 25 - Single resets

Parameter	Values	Description
Partial Energy	**Accumulated**	Clears all accumulated energy values (kWh, kvarh, kVAh).
Demand	**Power** **Current** **Input Metering**	Select the demand registers to clear (power demand, current demand, or input metering demand).
Alarms	**Event Queue**	Clears the alarm event queue register (active alarms list).
	History Log	Clears the alarm history log.
	Counters	Select the alarm counter to clear.
Digital Inputs	**Timer**	Select the digital input timer to clear (chose all or individual digital input timers).
	Counters	Select the digital input counter to clear (chose all or individual digital input timers)
Digital Outputs	**Timer**	Select the digital output timer to clear (chose all or individual digital output timers).
	Counters	Select the digital output counter to clear (chose all or individual digital output timers).
Active Load Timer	—	Clears and restarts the load operation timer.
Multi-Tariff	—	Clears accumulated values in all tariff registers.
Input Metering	**All Input Meters** **Input Meter Ch1** **Input Meter Ch2** **Input Meter Ch3** **Input Meter Ch4**	Select the input metering channel to clear (chose all or individual input metering channels).

6.1.20 Performing user account resets

Use the **Reset** screen to reset the EcoStruxure™ Power Device (EPD) user account password to its factory default value.

NOTE: Available only in meter models with Bluetooth.

To perform user account resets:

1. Navigate to **Settings**.
2. If **Display Passcode** is **Enabled**, enter the **Passcode**, and then press **OK**.
3. Navigate to **Reset > User Account Resets**.
4. Press **OK** and select **Reset** to confirm resetting the EcoStruxure™ Power Device (EPD) user account password to its factory default value.

6.1.21 Locking or unlocking revenue meter

Use the **Revenue Lock** screen to configure the revenue meter. The meter protects revenue-related settings and metrologically relevant parameters with a revenue lock through the display. After you initialize the meter, you must lock it to confirm to MID/MIR standards.

NOTE:

- The revenue lock or unlock is performed **only through** the meter display.
- Revenue lock screen is available only in MID/MIR meter models.
- There is no default revenue lock passcode. The revenue lock passcode is set by the user when the meter is first revenue-locked, usually after the initial meter configuration is completed. You can set a new passcode for future revenue-lock operations during the unlock or lock process.

Prerequisites:

Before you lock your meter:

- Make sure that you have completed all necessary configuration.
- Perform a meter initialization reset to clear any previously accumulated meter data.

A lost revenue lock passcode cannot be recovered.

NOTICE

REVENUE LOCK PASSCODE IRRECOVERABLE

- Record your revenue lock passcode information in a secure location to avoid losing access to revenue-related configuration screen.
- Use the same revenue lock passcode to unlock the meter.

Failure to follow these instructions can result in data loss and loss of access to product configuration.

NOTICE

LOSS OF ACCESS TO METER CONFIGURATION

Store the display passcode and the revenue lock passcode in a secure location for MID/MIR meter models.

Failure to follow these instructions can result in loss of access to the meter configuration.

For information about revenue lock meters, see Overview, page 139.

To lock or unlock revenue meter:

1. Locking the revenue meter:
   a. Navigate to **Settings**.
   b. If **Display Passcode** is **Enabled**, enter the **Passcode**, and then press **OK**.
   c. Navigate to **Revenue Lock** and press **OK**.
   d. Press **OK** and select **Locked** to enable the revenue lock setting.
   e. Set the 6-digit revenue lock **Passcode** (between **000000** and **999999**), and then press **OK**.

      NOTE: Make sure you record this revenue lock **Passcode** and store it in a secure place. Each time you set a revenue lock passcode for a meter, you must use that same passcode to unlock it.

   f. Select **Yes** and press **OK** to confirm the revenue lock metering setup and commands.

      A lock icon appears on the upper-right corner of the screen.

2. Unlocking the revenue meter:
   a. Navigate to **Settings**.
   b. If **Display Passcode** is **Enabled**, enter the **Passcode**, and then press **OK**.
   c. Navigate to **Revenue Lock** and press **OK**.
   d. Press **OK** and select **Unlocked** to disable the revenue lock setting.
   e. Enter the same revenue lock **Passcode** (between **000000** and **999999**) that you had set for locking, and then press **OK**.

      A lock icon disappears from the upper-right corner of the screen.

6.2 Configuring using the PowerLogic™ Engineering Suite

6.2.1 Configuring the meter settings

You can configure the meter using the PowerLogic™ Engineering Suite configuration tool.

Refer to the PowerLogic™ Engineering Suite online help or the PowerLogic™ Engineering Suite Configuration guide (7EN02-0505) for instructions on how to configure your meter.

7. Operating

7.1 Viewing voltage parameters

You can view the voltage LN and voltage LL parameters.

NOTE:

- The line-to-neutral voltages (V) [LN] depend on the selected **1PH2W LN**, **1PH3W LL With N**, and **3PH4W** power system type configurations.
- The line-to-line voltages (U) [LL] depend on the selected **1PH2W LL**, and **3PH3W** power system type configurations.

For information about individual harmonics up to the 31st, THD, and thd measurements, see Harmonics, page 130.

To view the voltage parameters:

1. Navigate to **Voltage** screen, and then press **OK**.
2. Scroll down to view different voltage parameters, and then press **OK**.

Table 26 - Voltages(V) [LN] parameters

Parameter	Description
Summary	
• **Phase Voltages(V) [LN]**	• Summary of line-to-neutral voltage on all three phases (**V1 [Van]**, **V2 [Vbn]**, **V3 [Vcn]**) and the average voltage (**V Avg.**).
• **Min/Max**	• Summary of the minimum and maximum values for line-to-neutral voltage on all three phases (**V1 [Van]**, **V2 [Vbn]**, **V3 [Vcn]**) and the average voltage (**V Avg.**) with timestamps.
Unbalance	Summary of the percentage line-to-neutral voltage unbalance (**V Unb**), along with the minimum and maximum values and their timestamps. **NOTE:** The line-to-neutral voltage unbalance (**V Unb**) is not applicable for **1PH** power system type configurations.
Harmonics Distortion	
• **THD V**	• Summary of THD (ratio of harmonic content to the fundamental) for line-to-neutral voltage on all three phases (**V1 [Van]**, **V2 [Vbn]**, **V3 [Vcn]**) along with the minimum and maximum values with timestamps.
• **thd V**	• Summary of thd (ratio of harmonic content to the rms value of total harmonic content) for line-to-neutral voltage on all three phases (**V1 [Van]**, **V2 [Vbn]**, **V3 [Vcn]**) along with the minimum and maximum values with timestamps.
Harmonics	Summary of line-to-neutral voltage harmonics data, including numeric magnitude and phase angle for the fundamental, and graphical representation of the 3rd to 15th odd harmonics for each line-to-neutral phase voltage.

Table 27 - Voltages(U) [LL] parameters

Parameter	Description
Summary	
• **Phase Voltages(U) [LL]**	• Summary of phase line-to-line voltage on all three phase pairs (**U12 [Vab]**, **U23 [Vbc]**, **U31 [Vca]**) and the average line-to-line voltage (**U Avg. [V Avg.]**).
• **Min/Max**	• Summary of the minimum and maximum values for line-to-line voltage on all three phase pairs (**U12 [Vab]**, **U23 [Vbc]**, **U31 [Vca]**) and the average line-to-line voltage (**U Avg. [V Avg.]**) with timestamps.
Unbalance	Summary of the percentage line-to-line voltage unbalance (**U Unb**), along with the minimum and maximum values and their timestamps. **NOTE:** The line-to-line voltage unbalance (**U Unb**) is not applicable for **1PH** power system type configuration.
Harmonics Distortion	
• **THD U**	• Summary of THD (ratio of harmonic content to the fundamental) for line-to-line voltage on all three phase pairs (**U12 [Vab]**, **U23 [Vbc]**, **U31 [Vca]**) along with the minimum and maximum values with timestamps.

Table 27 - Voltages(U) [LL] parameters (Continued)

Parameter	Description
• **thd U**	• Summary of thd (ratio of harmonic content to the rms value of total harmonic content) for line-to-line voltage on all three phase pairs (**U12 [Vab]**, **U23 [Vbc]**, **U31 [Vca]**) along with the minimum and maximum values with timestamps.
Harmonics	Summary of line-to-line voltage harmonics data, including numeric magnitude and phase angle for the fundamental, and graphical representation of the 3rd to 15th odd harmonics for each line-to-line phase voltage.

7.2 Viewing current parameters

You can view the phase current, unbalance, harmonics, and demand parameters.

NOTE:

- The phase currents (**(I1 [Ia]**, **I2 [Ib]**, **I3 [Ic]**) depends on the **CT on Terminal** selection for **1PH2W LN** and **1PH2W LL** power system type configurations.
- The neutral current (**In**) is available only for **1PH3W LL with N** and **3PH4W** power system type configurations.
- The ground current (**Ig**) is available only for **3PH3W** power system type configurations and when **CT on Terminal** is set to **I1 I2 I3**.

For information about individual harmonics up to the 31st, THD, thd, and TDD measurements, see Harmonics, page 130.

For information about demand measurements, see Demand, page 121.

To view the current parameters:

1. Navigate to **Current** screen, and then press **OK**.
2. Scroll through the parameters, and then press **OK** to view the current parameters.

Table 28 - Current parameters

Parameter	Description
Overview	
• **Phase Currents**	• Summary of each phase current (**(I1 [Ia]**, **I2 [Ib]**, **I3 [Ic]**), the neutral current (**In**), the ground current (**Ig**) and the average current (**I Avg.**).
• **Min/Max**	• Summary of the minimum and maximum values for each phase current (**(I1 [Ia]**, **I2 [Ib]**, **I3 [Ic]**), the neutral current (**In**), the ground current (**Ig**) and the average current (**I Avg.**) with timestamps.
Unbalance	Summary of the percentage current-unbalance (**I Unb**), along with the minimum and maximum values and their timestamps. **NOTE:** The current-unbalance (**I Unb**) is not applicable for **1PH** power system type configuration.
Harmonics Distortion	
• **THD I**	• Summary of THD (ratio of harmonic content to the fundamental) for each phase current (**(I1 [Ia]**, **I2 [Ib]**, **I3 [Ic]**), the neutral current (**In**), the ground current (**Ig**) along with the minimum and maximum values with timestamps.
• **thd I**	• Summary of thd (ratio of harmonic content to the rms value of total harmonic content) for each phase current (**(I1 [Ia]**, **I2 [Ib]**, **I3 [Ic]**), the neutral current (**In**), the ground current (**Ig**) along with the minimum and maximum values with timestamps.
• **Power Quality**	• Total Demand Distortion (TDD) values in percentage (%). TDD measures the total harmonic current (sum of all harmonic RMS currents) relative to the system's maximum load current.
Harmonics	Summary of current harmonics data, including numeric magnitude and phase angle for the fundamental, and graphical representation of harmonics of the 3rd to 15th odd harmonics for each phase current.
Demand	

Table 28 - Current parameters (Continued)

Parameter	Description
• **Present**	• Summary of the present demand interval for each phase current (**(I1 [Ia]**, **I2 [Ib]**, **I3 [Ic]**), the neutral current (**In**), the ground current (**Ig**) and the average current (**I Avg.**).
• **Last**	• Summary of the last demand interval for each phase current (**(I1 [Ia]**, **I2 [Ib]**, **I3 [Ic]**), the neutral current (**In**), the ground current (**Ig**) and the average current (**I Avg.**).
• **Predictive**	• Summary of the predicted demand based on the current consumption rate for each phase current (**(I1 [Ia]**, **I2 [Ib]**, **I3 [Ic]**), the neutral current (**In**), the ground current (**Ig**) and the average current (**I Avg.**).
• **Peak**	• Summary of the recorded peak demand for each phase current (**(I1 [Ia]**, **I2 [Ib]**, **I3 [Ic]**), the neutral current (**In**), the ground current (**Ig**) and the average current (**I Avg.**) with timestamps.

7.3 Viewing power parameters

You can view the summary of power, phase, demand, and power factor values.

For information about power factor calculation, see Power factor, page 124.

For information about demand measurements, see Demand, page 121.

To view the power parameters:

1. Navigate to **Power** screen, and then press **OK**.
2. Scroll through the parameters, and then press **OK** to view the power parameters.

Table 29 - Power parameters

Parameter	Description
Summary	
• **Total**	• Summary of the power consumption for total active power in kW (**P Total [Active Total]**), total reactive power in kvar (**Q Total [Reac Total]**), and total apparent power in kVA (**S Total [Appr Total]**).
• **Min/Max**	• Summary of the minimum and maximum values for total power consumption, including total active power in kW (**P Total [Active Total]**), total reactive power in kvar (**Q Total [Reac Total]**), and total apparent power in kVA (**S Total [Appr Total]**) with timestamps.
Phase	
• **Total**	• Summary of per phase and total power values for active power **P [Active]** in kW (**P1 [A]**, **P2 [B]**, **P3 [C]**, and **Total**), reactive power **Q [Reac]** in kvar (**Q1 [A]**, **Q2 [B]**, **Q3 [C]**, and **Total**), and apparent power **S [Appr]** in kVA (**S1 [A]**, **S2 [B]**, **S3 [C]**, and **Total**).
• **Active Power Min/Max**	• Summary of the minimum and maximum values for per phase and total active power in kW (**P1 [A]**, **P2 [B]**, **P3 [C]**, and **P Total [Active Total]**) with timestamps.
• **Reactive Power Min/Max**	• Summary of the minimum and maximum values for per phase and total reactive power in kvar (**Q1 [A]**, **Q2 [B]**, **Q3 [C]**, and **Q Total [Reac Total]**) with timestamps.
• **Apparent Power Min/Max**	• Summary of the minimum and maximum values for per phase and total apparent power in kVA (**S1 [A]**, **S2 [B]**, **S3 [C]**, and **S Total [Appr Total]**) with timestamps.
Demand	Summary of demand values for the current demand interval (**Present**), the previous demand interval (**Last**), and the predicted demand interval (**Predictive**) based on the current power consumption rate and the recorded peak power demand (**Peak**) value with timestamp for active power demand (**Pd [Wd]**), reactive power demand (**Qd [VARd]**) and apparent power demand (**Sd [VAd]**).
Power Factor	
• **Total**	• Summary of true power factor and displacement power factor values for each phase (**PF1 [PFa]**, **PF2 [PFb]**, **PF3 [PFc]**) and total (**PF Total**).

Table 29 - Power parameters (Continued)

Parameter	Description
• **True PF Min/Max** • **Displacement PF Min/Max**	• Summary of the minimum and maximum true power factor values with timestamps for each phase (**PF1 [PFa]**, **PF2 [PFb]**, **PF3 [PFc]**) and total (**PF Total**). • Summary of the minimum and maximum displacement power factor values with timestamps for each phase (**PF1 [PFa]**, **PF2 [PFb]**, **PF3 [PFc]**) and total (**PF Total**).

7.4 Viewing energy parameters

You can view the active energy (P), reactive energy (Q), apparent energy (S), multi-tariff, and input metering parameters.

For information about energy measurements, see Energy, page 120.

For information about multi-tariff measurements, see Multi-tariff, page 112.

For information about input metering measurements, see Input metering, page 102.

To view the energy parameters:

1. Navigate to **Energy** screen, and then press **OK**.
2. Scroll through the parameters, and then press **OK** to view the summary of the energy parameters.

Table 30 - Energy parameters

Parameter	Description
Partial Energy	Summary of accumulated values for delivered (**Del**), received (**Rec**), delivered plus received (**D +R**), and delivered minus received (**D-R**) for partial active energy in Wh (**P [Active]**), partial apparent energy in varh (**Q [Reac]**), and partial reactive energy in VAh (**S [Appr]**).
Non-Resettable Energy	Summary of accumulated values for delivered (**Del**), received (**Rec**), delivered plus received (**D +R**), and delivered minus received (**D-R**) for active energy in Wh (**P [Active]**), apparent energy in varh (**Q [Reac]**), and reactive energy in VAh (**S [Appr]**).
Tariff • **T1** to **T8**	***(Available in all models; quantity varies by model.)*** Summary of the multi-tariffs (**T1** to **T8**): **NOTE:** You can read multi-tariffs **T9** to **T16** only through communication. • Active energy delivered (**Del**) and received (**Rec**) in Wh (**P [Active]**) for the selected multi-tariff. • Reactive energy delivered (**Del**) and received (**Rec**) in varh (**Q [Reac]**) for the selected multi-tariff. • Apparent energy delivered (**Del**) and received (**Rec**) in VAh (**S [Appr]**) for the selected multi-tariff.
Input Metering • **Summary** • **Demand**	• Summary of energy accumulations for the input metering channels (**Inp Mtr Chan 1** to **Inp Mtr Chan 4**). • Summary of last demand for the input metering channels (**Inp Mtr Chan 1** to **Inp Mtr Chan 4**).

7.5 Viewing alarms

You can view the active alarms, alarm history, unacknowledged alarms, and alarm counters.

NOTE: The high priority alarm (red) is displayed on the screen until you acknowledge the alarm. The pop-up alarm is displayed only for high and medium priority alarms.

For information about alarms, see Alarms, page 104.

To view the alarm events:

1. Navigate to **Alarms** (🔔) screen.
2. Scroll through the parameters you need to view, and then press **OK**.
3. Press **OK** to acknowledge the alarm event details.

Table 31 - Alarm events

Parameter	Description
Active Alarms	List of all active alarm events with a date/timestamp for each event. Each alarm displays the severity, start time, event, phase, and threshold value.
Alarm History	Historical list of all acknowledged alarm events with a date/timestamp for each event. Each alarm displays the start time, event, phase, and threshold value.
Unack. Alarms	List of all unacknowledged alarm events.
Alarm Counter	Total number of occurrences for each alarm type.

7.6 Viewing inputs/outputs status

You can view the digital inputs, digital outputs, and relay outputs status.

For information about digital input applications, see Digital inputs, page 101.

For information about digital output applications, see Digital outputs, page 101.

For information about relay output applications, see Relay outputs, page 102.

To view the inputs/outputs status:

1. Navigate to **Inputs/Outputs** (⇄) screen.
2. Scroll through the parameters you need to view, and then press **OK**.

Table 32 - Inputs/Outputs status

Parameter	Description
Digital Inputs • **Digital Input S1** • **Digital Input S2** • **Digital Input S3** • **Digital Input S4**	***Available in all models; quantity varies by model.*** Status (**ON** or **OFF**) of the selected digital input. Counter shows the total number of detected off-to-on state transitions . Timer shows the total duration (in seconds) during which the digital input remains in the on state.
Digital Outputs • **Digital Output D1** • **Digital Output D2**	***(Available only in specific models; quantity varies by model.)*** Status (**ON** or **OFF**) of the selected digital output. Counter shows the total number of detected off-to-on state transitions. Timer shows the total duration (in seconds) during which the digital output remains in the on state.
Relay Outputs • **Relay Output R1** • **Relay Output R2**	***(Available only in specific models.)*** Status (**ON** or **OFF**) of the selected relay output. Counter shows the total number of detected off-to-on state transitions . Timer shows the total duration (in seconds) during which the relay output remains in the on state.

7.7 Viewing diagnostics information

You can view the device info, meter status, device-on/operation timer, control power, phasor/polar information, date and time, and meter information embedded in QR code format.

For information about meter status (diagnostic codes), see Meter status, page 91.

For information about control power interruption, see Control power (auxiliary power) interruption event, page 88.

To view the diagnostics information:

1. Navigate to **Diagnostics** ( ) screen.
2. Scroll through the parameters you need to view, and then press **OK**.

Table 33 - Diagnostics information

Parameter	Description
Device Info	Displays the meter model, serial number, date of manufacture, firmware version (including OS - Operating System, RS - Reset System and OS CRC (Cyclic Redundancy Check)), language firmware, and Bluetooth firmware. The OS CRC value is a number (Hexadecimal format) that identifies the uniqueness between different OS firmware versions.
Meter	Displays the meter status.
Timer	**Active Load Timer** counter that keeps track of the total number of days, hours, minutes, and seconds an active load is connected to the meter inputs. **Operating Timer** counter for the total number of days, hours, minutes, and seconds the meter has been powered.
Control Power	**Non-MID/MIR meter models:** The control power screen displays how many times the meter lost control power (number of losses) and the last power down event with the timestamp. **MID/MIR meter models:** The control power screen displays how many times the meter lost control power (number of losses) and the last power up and power down events with the timestamp.
Phasor/Polar	**Phasor**: Displays a graphical representation of the power system the meter is monitoring. **Polar**: Displays the numeric magnitude and angles of all voltage and current phases.
Date & Time	Displays the date and time.
Identification	Displays a QR code containing the meter information.

7.8 Acknowledging the control power (auxiliary power) interruption event

For MID/MIR compliance on applicable models.

Use the **Control Power** screen in the **Diagnostics** menu to acknowledge the control power interruption event. The Facility Manager must assess the cause and duration of the interruption as soon as the event icon appears on the meter display.

NOTE:

- You can acknowledge (dismiss) the control power interruption event with **Number of Losses**, **Last Power Up** and **Last Power Down** only after entering the **Revenue Lock** passcode.
- You cannot acknowledge alarms and control power interruption events at the same time.

For information about control power interruption, see Control power (auxiliary power) interruption event, page 88.

To acknowledge the control power (auxiliary power) interruption event:

1. Navigate to ( ) **Diagnostics > Control Power**.

   The **Number of Losses**, **Last Power Up** and **Last Power Down** events with timestamps appear on the same screen.

2. Press **OK** to acknowledge the control power (auxiliary power) interruption event.

3. Enter the **Revenue Lock** passcode, and then press **OK** to confirm clearing the on-screen notification.

   NOTE: You can reset the **Number of Losses** to **0** only through the Modbus communication. To perform this reset, you must disable the **Revenue Lock** passcode through the meter display.

8. Maintenance

8.1 Maintenance overview

The meter does not contain any user-serviceable parts. If the meter requires service, contact your local Schneider Electric Technical Support representative.

NOTICE
METER DAMAGE • Do not open the meter case. • Do not attempt to repair any components of the meter. **Failure to follow these instructions can result in equipment damage.**

Do not open the meter. Opening the meter voids the warranty.

8.2 Meter memory

The meter uses its non-volatile memory to retain data and metering configuration values.

Under the operating temperature range specified for the meter, this non-volatile memory is designed for an expected data retention life of approximately 20 years under specified conditions.

NOTE: Life expectancy is a function of operating conditions and does not constitute any expressed or implied warranty.

8.3 Meter battery

The internal battery in the meter keeps the meter's clock running when it is powered down to help maintain the meter time.

The life expectancy of the meter's internal battery is estimated to be over 10 years at 25 °C under typical operating conditions.

8.4 Diagnostics information

The meter provides you with diagnostics information to help with troubleshooting.

The **Diagnostics** screen provides meter info, meter status, meter on/operation timer, control power, phasor/polar information, date & time, and meter information embedded in QR code format.

8.5 Firmware version, model, and serial number

The **Device Info** menu in the **Diagnostics** screen provides the meter model, serial number, date of manufacture, firmware version (including OS - Operating System, RS - Reset System and OS CRC (Cyclic Redundancy Check)), language firmware, and Bluetooth firmware. The OS CRC value is a number (Hexadecimal format) that identifies the uniqueness between different OS firmware versions.

8.5.1 Firmware upgrades

Upgrading your meter's firmware:

- Enhance existing features and functions
- Add new functionality
- Achieve compliance to new industry standards
- Helps to strengthen cybersecurity
- Helps to improve performance (example, optimize processing speed)

The meter supports the downloading of new firmware and language files through the PowerLogic™ Engineering Suite, which is available at www.se.com. The latest firmware and language files are available on the website.

NOTE:

- Schneider Electric does not recommend performing firmware updates over a VPN connection.
- For MID/MIR meter models:
  - The meter supports a maximum of 25 firmware upgrade attempts, including both successful and unsuccessful attempts. After this limit is reached, no further firmware upgrades are permitted.
  - Disable the revenue lock using the meter display before upgrading.

8.6 Control power (auxiliary power) interruption event

NOTE: For MID/MIR compliance on applicable models.

When the meter is OFF and control power is applied, or when the meter is ON and the control power is reset, the following actions occur:

- An icon appears in the top-left corner of the screen to indicate that control power has been lost.
- When the meter is ON and the control power drops below the operating range, the meter logs a **Last Power Down** event with a timestamp before the power turns off.
- When the meter is OFF and the control power is applied, the meter logs a **Last Power Up** event with a timestamp after the power turns on.
- If multiple events occur along with a control power interruption, the control power interruption icon takes priority over all other icons.

  NOTE: The meter display shows only the total **Number of Losses**, **Last Power Down**, and **Last Power Up** events. To view the full history of control power interruptions (up to 20 events – 10 **Last Power Down** and 10 **Last Power Up**), you must access the data through a communication interface.

8.7 Wrench icon

The wrench icon appears on the top left corner of the display screen.

The wrench icon alerts you when there is an over voltage condition or a potential hardware or firmware abnormality in the meter that requires attention. It could also indicate that the energy pulsing LED is in an overrun state.

The **Meter** menu in the **Diagnostics** screen provides the meter status information. Make note of the information shown on the screen, then contact Schneider Electric Technical Support. Refer to Diagnostic codes, page 91.

8.8 Phasors

Phasors are used to represent the voltage and current relative magnitude and angles.

The length of the lines in the phasor diagram represents the relative magnitude of the voltages with respect to the other phase voltages, and the currents with respect to the other phase currents. All angles are measured with respect to the V1 phase. The V1 phasor is fixed to the right-hand horizontal axis (positive x-axis). Positive angles are measured counterclockwise.

Numeric values are provided for the magnitude and relative angle for each voltage and current phase.

Phasor information can be used to troubleshoot incorrect connections on the meter's voltage and current inputs (for example, switched phase wiring or polarity deviation), if you know how the phasors should be oriented for your power system.

8.8.1 Phasor screens

Phasor information is available on the meter's display.

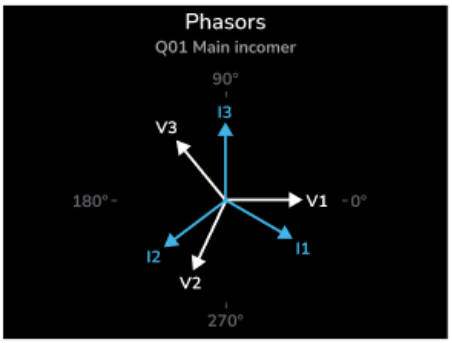

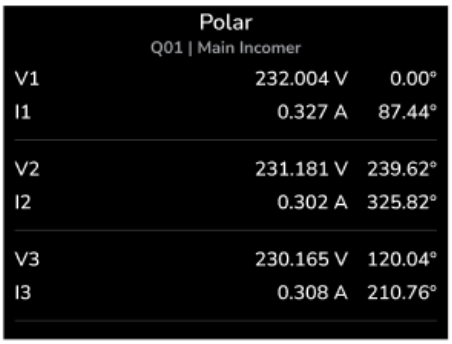

The graph on the **Phasors** screen shows a representation of the phase angles in degrees. The **Polar** screen shows the RMS value and phase angle of each voltage and current phases.

NOTE: If two phasor lines overlap (example, if they have the same relative phase angle), only one phase label is visible as phasor diagram labels are overwritten dynamically on the display panel.

8.9 Troubleshooting

8.9.1 LED indicators

Abnormal heartbeat/serial communications LED behavior could mean potential problems with the meter.

Problem	Probable causes	Possible solutions
LED flash rate does not change when data is sent from the host computer.	Communications wiring	If using a serial to RS-485 converter, trace, and check that all wiring from the computer to the meter is properly connected.
	Internal hardware problem	Perform a hard reset: turn off control power to the meter, then re-apply power. If the problem persists, contact Technical Support.

Problem	Probable causes	Possible solutions
Heartbeat/serial communications LED remains lit and does not flash ON and OFF	Internal hardware problem	Perform a hard reset: turn off control power to the meter, then re-apply power. If the problem persists, contact Technical Support.
Heartbeat/serial communications LED flashes, but the display is blank.	Display setup parameters incorrectly set	Check the display settings over communication.

If the problem is not fixed after troubleshooting, contact Technical Support for help. Make sure that you have your meter's firmware version, model, and serial number information available to the Technical Support team for further diagnosis.

8.9.2 Troubleshooting checks

There are some checks you can perform to try to identify potential issues with the meter's operation.

The following table describes potential problems, their possible causes, checks you can perform or possible solutions for each. After referring to this table, if you cannot resolve the problem, contact your local Schneider Electric Technical Support for assistance.

⚠⚠DANGER

HAZARD OF ELECTRIC SHOCK, EXPLOSION, OR ARC FLASH

- Apply appropriate Personal Protective Equipment (PPE) and follow safe electrical work practices. See NFPA 70E, CSA Z462 or other local standards.
- This equipment must be installed and serviced only by qualified personnel.
- Turn off all power supplying this device and the equipment in which it is installed before working on or in the equipment.
- Always use a properly rated voltage sensing device to confirm that all power is off.
- Assume communications and I/O wiring are hazardous live until determined otherwise.
- Do not use the data from the meter to confirm power is off.

Failure to follow these instructions will result in death or serious injury.

Potential problem	Possible cause	Possible solution
The maintenance (wrench) icon appears on the meter display. Refer to Diagnostic codes, page 91.	It indicates an event has occurred which may require attention.	Go to **Diagnostics > Meter** screen. Event messages display to indicate the reason the icon is illuminated. Note these event messages and call the Technical Support representative for assistance.
The display is blank after applying control power to the meter.	The meter may not be receiving the necessary power.	The display may have timed out. Verify that the power meter line and terminals are receiving the necessary power. Verify that the heartbeat LED is blinking. Press a button to see if the display entered screen saver mode.
The data being displayed is inaccurate or not what you expect.	• Incorrect setup values. • Incorrect voltage inputs. • Meter is wired improperly	• Check that the correct values have been entered for meter setup parameters (CT and VT ratings, Nominal Frequency, and so on). • Check meter voltage input terminals (1, 2, 3, 4) to verify that adequate voltage is present. • Check that all CTs and VTs are connected correctly (proper polarity is observed) and that they are energized. Check shorting terminals. See the in the Wiring section of the Instruction Sheet.

Potential problem	Possible cause	Possible solution
		• Check the phasor or polar screens to diagnose wiring issues.
Cannot communicate with meter from a remote personal computer.	• Meter address is incorrect. • Meter baud rate is incorrect. • Communications lines are improperly connected. • Communications lines are improperly discontinued.	• Check to see that the meter is correctly addressed. • Verify that the baud rate of the meter matches the baud rate of all other devices on its communications link. • Verify the meter communication connections. • Check to see that a multi-point communications terminator is installed.
Energy/Alarm LED not working.	May have been disabled by user.	Confirm that the energy/alarm LED is configured correctly.
Meter communication failure on network	IP address conflict	• Verify that no duplicate IP address exists on the network. • Check device diagnostics and network configuration. The meter records diagnostic events related to: ◦ IP address conflict detection ◦ IP address changes ◦ Fallback IP assignment **NOTE:** If an IP address conflict occurs, the meter automatically detects and manages the condition. For more information, refer IPv4 address conflict detection, page 95.

8.9.3 Diagnostic codes

The meter status provides you with diagnostic codes to help with troubleshooting.

Refer to the table below for the diagnostic codes, their possible causes, and the corresponding corrective actions. If the issue persists after you perform the actions described, contact Technical Support.

NOTE: If multiple errors occur simultaneously, the displayed error code is a combination of the active error codes. Contact Technical Support for assistance in interpreting the error code.

Diagnostic code	Fault	Probable causes	Possible solutions
0x0004	NVRAM Fail	Internal non-volatile memory failure.	Contact Technical Support for meter replacement.
0x0008	RTC Fail	Real-time clock malfunction.	Contact Technical Support for meter replacement.
0x0010	Calibration Fail	Calibration data error or corruption.	Contact Technical Support for meter replacement.
0x0020	Clipping Detected	Input voltage or current exceeds the supported limit.	Reduce the measurement input to within the supported range.
0x0040	Energy Pulse Overrun	Configured pulse per k_h for energy LED or digital output is too high.	Reduce the configured pulse per k_h value to within the supported range.
0x0080	Input Metering Digital Input Rate Exceeded	Pulse rate received on the digital input exceeds the supported limit.	Reduce the pulse output from the connected meter to within the supported range.
0x0100	Language Version Fail	Language or configuration error.	Restart the upgrade after power cycling the meter. Contact Technical Support if the issue persists.
0x0200	Language String Mismatch	Language or configuration error.	Restart the upgrade after power cycling the meter. Contact

Diagnostic code	Fault	Probable causes	Possible solutions
			Technical Support if the issue persists.
0x0400	BLE Comm Fail	BLE communication failure.	Contact Technical Support for diagnosis.
0x0800	Flash Fail	Flash memory failure.	Contact Technical Support for meter replacement.
0x1000	ADC Fail	Analog-to-digital converter failure.	Contact Technical Support for meter replacement.
0x2000	Firmware Upgrade Fail	Interruption during firmware upgrade (power or communication issue).	Restart the upgrade after power cycling the meter. Contact Technical Support if the issue persists.

8.10 Technical assistance

Visit www.se.com for support and assistance with lost passcodes or other technical problems with the meter.

Make sure you have your meter's model, serial number, and firmware version readily available if calling Technical Support.

9. Technical reference

9.1 Communications

9.1.1 Recommended network communication metrics

Avoid unsupported network packets and implement traffic filtering to ensure proper meter operation.

NOTE:

- To help prevent unintended functioning of the meter and communication interfaces, avoid sending unsupported network packets for extended periods. If issues occur, perform a power cycle to restore normal operation.
- To minimize unwanted traffic to the meter, implement traffic filtering at the switch level. For example, if the meter is connected in an IGMP environment with a switch, enable IGMP snooping, configure the VLAN interface settings, and apply multicast filtering.

9.1.2 Serial communications

The meter supports serial communication through the RS-485 port.

In an RS-485 network, there is usually one main device (called a client), like an Ethernet to RS-485 gateway, which connects to several other devices (called servers), such as meters. For applications that require only one dedicated computer to communicate with the servers, an USB to RS-485 converter can be used to connect to the client.

You can connect up to 32 devices on a single RS-485 network.

9.1.2.1 RS-485 network configuration

Each device on the same RS-485 communications bus must have a unique address and all connected devices must be set to the same protocol, baud rate, and parity (data format).

NOTE: To communicate with the meter using PowerLogic™ Engineering Suite, you must set the serial site and all connected devices in the RS-485 network to the same parity setting.

9.1.2.2 RS-485 port setup

The meter is factory-configured with default serial communications settings that you may need to modify before connecting the meter to the RS-485 bus.

The meter is factory-configured with the following default serial communications settings:

- **Modbus RTU** = Enabled
- **Modbus Write Protection** = Disabled
- **Mode** = Slave
- **Protocol** = Modbus RTU
- **Address** = 1
- **Baud Rate** = 19200
- **Parity** = Even

You can use a communications converter or Ethernet gateway device to connect to the meter.

9.1.3 Ethernet communications

The meter uses Modbus TCP and BACnet/IP protocols to communicate at data speed up to 100 Mbps through its Ethernet port.

Table 34 - Protocol, ports, and connections

Protocol	Port (Default)	Number of connections
Modbus TCP	502	8
BACnet/IP	47808	N/A

9.1.3.1 Ethernet configuration

To use Ethernet communication, you must configure your device's IP address, subnet, and gateway information, if required by your network.

You need to enter network information for any Ethernet servers used by the device.

NOTE: Contact your network system administrator for your IP address and other Ethernet network configuration values.

Configure the device's Ethernet settings using the display. Modify the settings provided by your network administrator before connecting the meter to your local area network (LAN).

After the Ethernet port is configured and connected to the LAN, you can use PowerLogic™ Engineering Suite to configure other meter setup parameters.

9.1.3.2 Ethernet port setup

The meter is factory-configured with default Ethernet communications settings.

You must modify the default Ethernet settings before connecting the meter to your local area network (LAN).

The default Ethernet communications settings are:

- **Modbus TCP** = Enabled
- **Modbus Write Protection** = Disabled
- **MAC ID** = Factory-programmed MAC address
- **Device Name** = PM7•••
- **DPWS** = Enabled
- **IPv4 Status** = Enabled
- **IPv4 Filtering Status** = Disabled
- **IPv4 Mode** = Static
- **IPv4 Address** = `169.254.x.x`, where `x.x` is derived from the last two digits of the MAC address
- **IPv4 Subnet Mask** = `255.255.255.0`
- **IPv4 Gateway** = `169.254.x.x`, where `x.x` is derived from the last two digits of the MAC address
- **IPv6 Status** = Disabled
- **IPv6 Filtering Status** = Disabled
- **IPv6 Mode** = Static

- **IPv6 Link Local Address** = Derived from the fe80::/64 prefix and the MAC address
- **IPv6 Global Address** = Prefix 2001:0db8:85a3:0000::/64, with the remaining 64 bits derived from the MAC address
- **IPv6 Gateway** = `2001:0db8:85a3:0000:0000:0000:0000:0001`

9.1.3.3 IPv4 address conflict detection

The meter detects and manages duplicate IPv4 addresses on the network using Address Conflict Detection (ACD).

Overview

The meter supports IPv4 Address Conflict Detection (ACD) to detect and handle duplicate IPv4 addresses on the network.

An IPv4 address conflict occurs when two meters on the same network use the same IPv4 address. This condition can lead to:

- Communication failures
- Intermittent connectivity
- Packet loss
- Application errors

Causes of IPv4 address conflicts

IPv4 address conflicts can occur for the following reasons:

- Misconfigured static IPv4 addresses
- Duplicate IPv4 address configuration
- DHCP server issues
- Multiple DHCP servers on the same network
- Cloned meters with unchanged network settings

ACD functionality

Initial probing

- Sends Address Resolution Protocol (ARP) probes before using an IPv4 address.
- Checks whether another meter is using the address.
- Identifies a conflict if a response is received.

Address announcement

- Sends ARP announcements after confirming that no conflict exists.
- Notifies other devices on the network of IPv4 address usage.

Ongoing monitoring

- Monitors the network for conflicts after assigning an IPv4 address.
- Follows the configured behavior if a conflict is detected.

ARP operations

ARP probe

- Sent before assigning an IPv4 address.
- Uses `0.0.0.0` as the source IPv4 address.
- Checks whether the target IPv4 address is already in use.

ARP announcement

- Sent after assigning an IPv4 address.
- Uses the same IPv4 address as both source and target.
- Updates other meters on the network about IPv4 ownership.

Meter behavior during conflict detection

DHCP configuration

- Conflict during startup:
  - Sends a DHCP Decline message to the DHCP server.
  - Initiates a new DHCP request.
- Conflict during operation:
  - Releases the conflicting IPv4 address.
  - Sends a new DHCP request to obtain another IPv4 address.
- DHCP server not available:
  - Repeats the DHCP requests.
  - If no response is received:
    - Assigns a fallback IPv4 address in the `169.254.x.x` range, where `x.x` is derived from the last two digits of the MAC address.
    - Continues DHCP repeat attempts at regular intervals.

Static IPv4 configuration

- Detects conflicts on the configured IPv4 address.
- Avoids using the conflicting address.
- P performs periodic checks to verify whether the conflict persists.
- Restores the configured IPv4 address after the conflict is resolved.

Fallback IPv4 behavior

- Assigns a link-local fallback IPv4 address (`169.254.x.x`, where `x.x` is derived from the last two digits of the MAC address) when required. Verifies that the fallback address is not in use before assignment.
- If the fallback IPv4 address is also in conflict:
  - Does not assign an IPv4 address.
  - May display `0.0.0.0` as the IPv4 address.

9.1.4 BACnet/IP

BACnet/IP protocol allows communication between the components of a building automation and control system (for example, HVAC, lighting control, security systems and related equipment).

The BACnet/IP protocol defines a number of services that are used to communicate between devices and the objects that are acted upon by those services.

Term	Definition
APDU	Application protocol data unit, that data portion of a BACnet message.
Confirmed message	A message for which the device expects an answer.
COV, COV increment	Change of value, sets the amount by which a value must change for the meter to send a subscription notification.
Device	A BACnet device is a unit that is designed to understand and use BACnet protocol (for example, a BACnet-enabled meter or software program). It contains information about the device and device data in objects and object properties. Your meter is a BACnet device.

Term	Definition
Object	Represents the device and device data. Each object has a type (for example, analog input or binary input) and has a number of properties.
Present value	The current value of an object.
Property	The smallest piece of information in BACnet communications, it consists of a name, data type, and value.
Service	Messages from one BACnet device to another.
Subscription	A relationship between a BACnet client and the meter, so that when the present value property of an object changes on the meter, a notification is sent to the client.
Subscription notification	The message the meter sends to indicate a COV event has occurred.
Unconfirmed message	A message for which the device does not expect an answer.
BACnet Broadcast Management Device (BBMD)	A BACnet/IP device (or software application) residing on a BACnet/IP subnet that sends BACnet broadcast messages from devices on its subnet to peer BBMDs and registered foreign devices on other subnets.
Foreign device	A BACnet/IP device (or software application) that resides on a remote IP subnet and registers with a BBMD to facilitate the sending and receiving of broadcast messages to/from devices accessible by the BBMD.

9.1.4.1 Supported BACnet features

Your meter supports specific BACnet components and standard objects.

The meter's BACnet/IP protocol support is certified by BACnet International. Go to www.bacnetinternational.org or www.se.com and search for your meter model to access the PICS (Protocol Implementation Conformance Statement) for your meter.

Supported BACnet components

BACnet component	Description
Protocol version	1
Protocol revision	25
Standardized device profile (Annex L)	BACnet Application Specific Controller (B-ASC)
BACNet Interoperability Building Blocks (Annex K)	• DS-RP-B (Data Sharing - Read Property - B) • DS-RPM-B (Data Sharing - Read Property Multiple - B) • DS-WP-B (Data Sharing - Write Property - B) • DS-WPM-B (Data Sharing - Write Property Multiple - B) • DS-COV-B (Data Sharing - COV - B) • DM-DDB-B (Device Management - Dynamic Device Binding - B) • DM-DOB-B (Device Management - Dynamic Object Binding - B) • DM-DCC-B (Device Management - Device Communication Control - B) • DM-RD-B (Device Management - Reinitialize Device - B) • NM-FDR-A (Network Management – Foreign Device Registration – A)
BACnet/IP (Annex J)	BACnet communication internet protocol
Data link layer options	UDP
Character set ANSI	X3.4/UTF-8
Supported services	• subscribeCOV • readProperty • readPropertyMultiple • writeProperty • writePropertyMultiple • deviceCommunicationControl • who-HAS • who-Is

BACnet component	Description
	• I-Am • I-Have • Confirmed COV notification • Unconfirmed COV notification
Segmentation	The meter does not support segmentation
Static device address binding	The meter does not support static device address binding
Networking options	The meter supports registration as a foreign device

Supported standard object types

NOTE: The BACnet protocol allows you to set the out-of-service property of an object to true and write a value to that property for testing purposes. In this case, your BACnet software displays the value you wrote to the object, not the actual value from the meter and the system it is monitoring. Make sure you set the out-of-service property of all objects to false before you put the meter into service.

Object type	Optional properties supported	Writeable properties supported	Conditional writeable properties supported
Device Object	• Location • Description • Local_Time • Local_Date • Active_COV_Subscriptions • Profile_Name	• Object_Name • Object_Identifier • Location • Description • APDU_Timeout • Number_Of_APDU_Retries	—
Analog Input Object	• Description • Reliability • COV_Increment	• Out_Of_Service • COV_Increment	Present_Value
Binary Input Object	• Description • Reliability	Out_Of_Service	Present_Value
Multi-state Input Object	• Description • Reliability • State_Text	Out_Of_Service	Present_Value
Network Port	• Description • Network_Number • Network_Number_Quality • Apdu_Length • Link_Speed • Mac_Address • Bacnet_Ip_Mode • Bacnet_Ip_Udp_Port • Bacnet_Ip_Address • Bacnet_Ip_Subnet_Mask • Bacnet_Ip_Default_Gateway • Bacnet_Ip_Dns_Server	—	• FD BBMD Address • FD Subscription Lifetime

9.1.4.2 BACnet/IP communications implementation

Your meter's BACnet implementation includes specific behaviors and configuration. See your meter's BACnet object list at www.se.com for the supported standard object types.

Basic configuration for BACnet communications

Before communicating with the meter via BACnet protocol, make sure the basic BACnet settings are configured appropriately for your network. The Device ID must be unique in your BACnet IP network.

Change of Value (COV) subscriptions

The meter supports up to 20 COV subscriptions. You can add COV subscriptions to Analog Input, Binary Input and Multi-state Input objects using your BACnet-compatible software.

9.1.4.3 BACnet/IP settings

The meter is factory-configured with default BACnet/IP communications settings that you may need to modify.

The default BACnet/IP communications settings are:

- **BACnet/IP** = Disabled
- **BACnet/IP Write Protection** = Enabled
- **Device ID** = A unique ID derived from the device serial number.
- **UDP Port** = 47808
- **BBMD** = Disabled
- **BBMD IP** = 000.000.000.000
- **BBMD Port** = 47808
- **BBMD TTL** = 600

9.2 Logging

9.2.1 Data log

The meter is shipped from the factory with data logging enabled for selected values.

Typically, delivered energy (kWh, kvarh, and kVAh) is logged by default, but you can configure the meter to record other measurements, such as received energy, input metering accumulations, and peak demand values from previous demand intervals.

The meter can record 14 parameters for 180 days at 15-minute intervals (default).

9.2.2 Alarm log

The meter can log the occurrence of any alarm condition. The alarm records are stored in the meter's alarm history log.

Each time an alarm occurs, it is recorded in the alarm log. The alarm log in the meter stores the pickup and dropout points of the alarms, along with the corresponding date and time.

9.2.2.1 Alarm log storage

The power and energy meter stores alarm log data in non-volatile memory.

The size of the alarm log is fixed at 40 records.

9.2.3 Memory allocation for log files

Each file in the meter has a maximum memory size.

Memory is not shared between the different logs, so reducing the number of values recorded in one log does not allow more values to be stored in a different log.

Log type	Maximum records stored	Storage
Alarm log	40	2200 bytes
Data log *	135826	2MB

* The data log stores up to 2 MB of recorded data. The maximum retention period depends on the logging interval and the number of selected parameters. Actual data retention may vary depending on the logging configuration and the number of parameters selected for recording.

- **Default configuration (15-minute logging interval, 3 parameters)**: Approximately 60367 records, providing up to 21 months of data storage.
- **Maximum configuration (15-minute logging interval, 14 parameters)**: Approximately 17526 records, providing up to 6 months of data storage.
- **Minimum configuration (15-minute logging interval, 1 parameter)**: Approximately 135826 records, providing up to 47 months of data storage.

9.3 Inputs/Outputs

9.3.1 Digital input applications

Digital inputs are typically used for monitoring the status of external contacts or circuit breakers.

9.3.1.1 Digital input wiring considerations

The meter's digital inputs require an external voltage source to detect the digital input's on/off state.

The meter detects an ON state if the external voltage appearing at the digital input is within its operating range. The external voltage can be derived from either the wetting output provided by the meter or by a voltage source up to 36 V DC external to the meter.

9.3.2 Digital output applications

Digital outputs are typically used in switching applications, for example, to provide on/off control signals for switching capacitor banks, generators, and other external devices and equipment.

The digital outputs can handle voltages less than 40 V DC.

The digital output can also be used in demand synchronization applications, where the meter provides pulse signals to the input of another meter to control its demand period. The digital output can also be used in energy pulsing applications, where a receiving device determines energy usage by counting the kWh pulses coming from the meter's digital output.

You can connect one of your meter's digital outputs to a relay that switches on a generator and the other digital output to send a demand sync pulse to other meters.

The digital outputs on the meter are internally designed using solid-state devices with an open-collector configuration. These outputs must be connected to the specified power supply with a current limiter to function.

9.3.2.1 Digital output application example

You can connect one of your meter's digital outputs to a relay that switches on a generator and the other digital output to send a demand sync pulse to other meters.

In the following example, the first meter (Meter 1) controls and sets the demand period (900 seconds) of the other meters (Meter 2, Meter 3, Meter 4) through the output pulse occurring at the end of the first meter's demand interval.

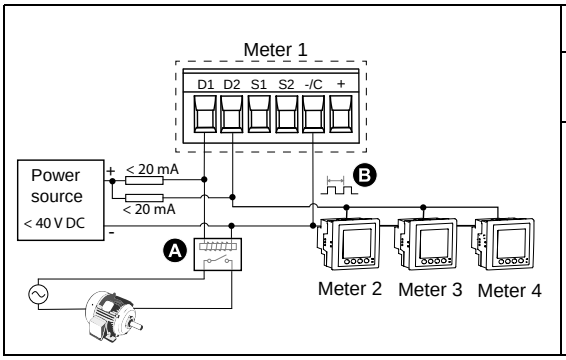

A	Relay
B	Demand period (in this example, 900 seconds)

9.3.3 Relay output applications

Relay outputs can be configured to be used in switching applications, for example, to provide on/off control signals for switching capacitor banks, generators, and other external devices and equipment.

⚠ WARNING

RISK OF INJURY OR EQUIPMENT DAMAGE

Always apply the same power type (AC or DC) to both the relay outputs.

Failure to follow these instructions can result in death, serious injury, or equipment damage.

9.3.4 Energy pulsing

You can configure the meter's alarm/energy LED or the digital outputs for energy pulsing.

- The meter is equipped with an alarm/energy pulsing LED. When configured for energy pulsing, the LED emits pulses that are then used to determine the accuracy of the meter's energy measurements.
- The meter sends the pulses from the configured digital outputs port, which are then used to determine the accuracy of the meter's energy measurements by pulse counter.

9.3.5 Input metering

The digital inputs are designed to count pulses from external transducers and convert these pulses to energy measurements.

Each input metering channel is configured to count the pulses received from its assigned digital input. These incoming pulses are used to calculate and measure consumption data (example, BTU, kWh, L, kg). To ensure accurate measurement, each channel must be configured with the following parameters:

- Pulse Weight: Defines the number of pulses per unit of measurement.
- Unit Code: Specifies the unit of measure associated with the monitored value (e.g., Wh, kWh, L, kg).
- Demand Code: For time-based values (e.g., kWh), this defines the associated demand unit (e.g., kW) used in demand calculations. For other values (e.g., kg), it can be configured to provide rate information (e.g., kg/h or kg/s).
- Mode: Determines whether the input is triggered by a complete pulse or a signal transition.

For example, if one pulse represents 125 Wh, you can configure the meter for Wh pulsing as follows:

- Pulse Weight = pulses/Wh = 1/125 = 0.008
- Unit Code = Wh
- Demand Code = kW (automatically set)
- Mode = pulse

If you want to configure the meter for kWh pulsing, you need to adjust the pulse weight calculation and unit code as follows:

- Pulse Weight = pulses/kWh = 1/0.125 = 8
- Unit Code = kWh

9.4 Resets

9.4.1 Meter resets

Resets allow you to clear various accumulated parameters stored on your meter or reinitialize the meter or meter accessories.

Meter resets clear your meter's onboard data logs and other related information. Resets are typically performed after you make changes to the meter's basic setup parameters (such as frequency, VT/PT or CT settings) to clear invalid or obsolete data in preparation for putting the meter into active service.

9.4.1.1 Meter initialization

Meter initialization is a special command that clears the meter's logged data, counters, and timers.

It is common practice to initialize the meter after its configuration is completed, before adding it to an energy management system.

After configuring all the meter setup parameters, navigate through the different meter display screens and make sure the displayed data is valid then perform meter initialization.

9.5 Alarms

9.5.1 Alarms overview

An alarm is the meter's means of notifying you when an alarm condition is detected, such as an error or an event that falls outside of normal operating conditions. Alarms are typically setpoint-driven and can be programmed to monitor certain behaviors, events, or unwanted conditions in your electrical system.

You can configure your meter to generate and display high, medium, and low priority alarms when predefined events are detected in the meter's measured values or operating states. Your meter also logs the alarm event information.

The meter ships with some alarms already enabled from the factory. Other alarms need to be configured before the meter can generate alarms.

Customize meter alarms as required, such as changing the priority. You can also create custom alarms using the advanced features of your meter.

9.5.2 Available alarms

Your meters support a number of different alarm types.

Alarm type	Number
Unary	4
Digital	4 (The number of available digital alarms depends on the meter model.)
Standard	29

9.5.3 Unary alarms

A unary alarm is the simplest type of alarm — it monitors a single behavior, event, or condition.

NOTE: Power cycle the device to reset the unary alarms.

Available unary alarms

The meter supports four unary alarms.

Table 35 - Unary alarms list

Alarm	Description
Meter Power Up	Meter powers on after losing control power.
Meter Reset	Meter resets for any reason.
Meter Diagnostics	Meter's self-diagnostic feature detects an abnormality.
Phase Reversal	Meter detects an unexpected phase rotation.

9.5.4 Digital alarms

Digital alarms monitor the ON or OFF state of the meter's digital inputs.

Available digital alarms

The meter supports 1, 2, or 4 digital alarms.

NOTE: The number of available digital alarms depends on the meter model.

Table 36 - Digital alarms list

Alarm	Description
Digital Alarm S1	Digital input 1
Digital Alarm S2	Digital input 2
Digital Alarm S3	Digital input 3
Digital Alarm S4	Digital input 4

Digital alarm with setpoint delay

To help prevent false triggers from erratic signals, you can set up pickup and dropout time delays for the digital alarm.

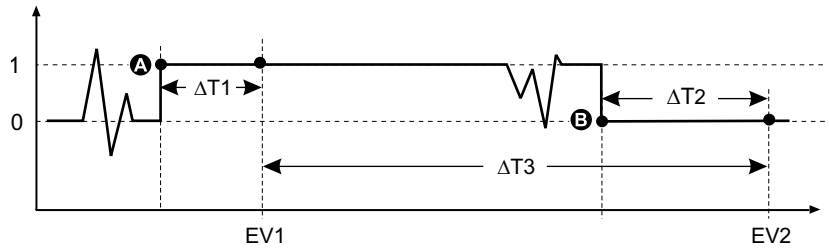

A	Pickup setpoint (1 = ON)	ΔT2	Dropout time delay (in seconds)
B	Dropout setpoint (0 = OFF)	EV2	End of alarm condition
ΔT1	Pickup time delay (in seconds)	ΔT3	Alarm duration (in seconds)
EV1	Start of alarm condition		

NOTE: To help prevent filling the alarm log with nuisance alarm trips, the digital alarm is automatically disabled if the digital input changes state more than four times in one second or more than 10 times in ten seconds. In this case, you must re-enable the alarm using the display or PowerLogic™ Engineering Suite.

9.5.5 Standard alarms

Standard alarms are set point-driven alarms which monitor certain behaviors, events, or unwanted conditions in your electrical system.

Standard alarms have a detection rate equal to the 50/60 meter cycle, which is nominally 1 second if the meter's frequency setting is configured to match the system frequency (50 or 60 Hz).

Many of the standard alarms are 3-phase alarms. Alarm set points are evaluated for each of the three phases individually, but the alarm is reported as a single alarm. The alarm pickup occurs when the first phase exceeds the alarm pickup magnitude for the pickup time delay. The alarm is active if any phase remains in an alarm state. The alarm dropout occurs when the last phase drops below the dropout magnitude for the dropout time delay.

Available standard alarms

The meter supports set of standard alarms.

Table 37 - Standard alarms list

Over Current, Phase	**Over Demand Active Power, Present**
Under Current, Phase	**Over Demand Active Power, Last**
Over Current, Neutral	**Over Demand Active Power, Predicted**
Over Current, Ground	**Over Demand Reactive Power, Present**
Over Voltage, L-L	**Over Demand Reactive Power, Last**
Under Voltage, L-L	**Over Demand Reactive Power, Predicted**
Over Voltage, L-N	**Over Demand Apparent Power, Present**
Under Voltage L-N	**Over Demand Apparent Power, Last**
Over Power, Active	**Over Demand Apparent Power, Predicted**
Over Power, Reactive	**Over Frequency**
Over Power, Apparent	**Under Frequency**
Leading Power Factor, True	**Over Voltage Unbalance**
Lagging Power Factor, True	**Over Voltage Total Harmonic Distortion***
Leading Power Factor, Displacement	**Phase Loss**
Lagging Power Factor, Displacement	

* **Over Voltage Unbalance**and **Over Voltage Total Harmonic Distortion** alarms applies only to L-L voltage.

9.5.5.1 Example of over and under setpoint (standard) alarm operation

The meter supports over and under setpoint conditions on standard alarms.

A setpoint condition occurs when the magnitude of the signal being monitored crosses the limit specified by the pickup setpoint setting and stays within that limit for a minimum time specified by the pickup time delay setting.

The setpoint condition ends when the magnitude of the signal being monitored crosses the limit specified by dropout setpoint setting and stays within that limit for a minimum time specified by dropout time delay setting.

Over setpoint

When the value rises above the pickup setpoint setting and remains there long enough to satisfy the pickup time delay period (ΔT1), the alarm condition is set to ON. When the value falls below the dropout setpoint setting and remains there long enough to satisfy the dropout time delay period (ΔT2), the alarm condition is set to OFF.

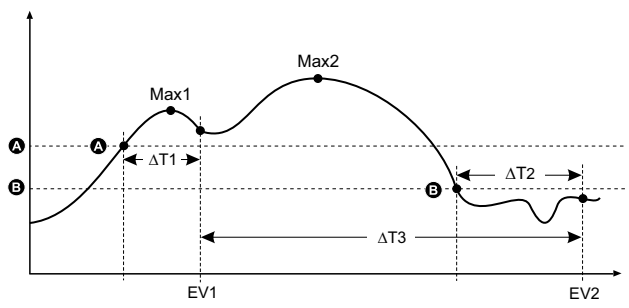

A	Pickup setpoint
B	Dropout setpoint
ΔT1	Pickup time delay period (in seconds)
EV1	Start of alarm condition
ΔT2	Dropout time delay (in seconds)
EV2	End of alarm condition
ΔT3	Alarm duration (in seconds)
Max1	Maximum value recorded during pickup period

Max2	Maximum value recorded during alarm period

The meter records the date and time when the alarm event starts (EV1) and when it ends (EV2). The meter also performs any task assigned to the event, such as operating a digital output. The meter also records maximum values (Max1, Max2) before, during or after the alarm period.

Under setpoint

When the value falls below the pickup setpoint setting and remains there long enough to satisfy the pickup time delay period (ΔT1), the alarm condition is set to ON. When the value rises above the dropout setpoint setting and remains there long enough to satisfy the dropout time delay period (ΔT2), the alarm condition is set to OFF.

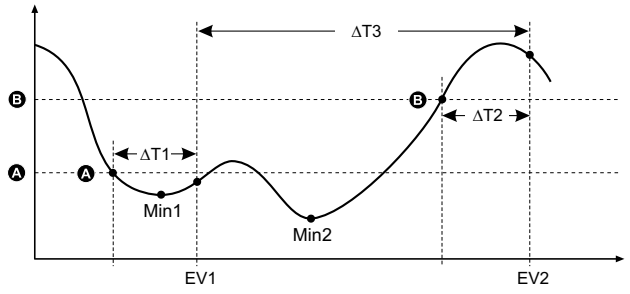

A	Pickup setpoint
B	Dropout setpoint
ΔT1	Pickup time delay period (in seconds)
EV1	Start of alarm condition
ΔT2	Dropout time delay (in seconds)
EV2	End of alarm condition
ΔT3	Alarm duration (in seconds)
Min1	Minimum value recorded during pickup period
Min2	Minimum value recorded during alarm period

The meter records the date and time when the alarm event starts (EV1) and when it ends (EV2). The meter also performs any task assigned to the event, such as operating a digital output. The meter also records minimum values (Min1, Min2) before, during or after the alarm period.

9.5.5.2 Maximum allowable setpoint

The meter is programmed to help prevent user data entry errors, with set limits for the standard alarms.

The maximum setpoint value you can enter for some of the standard alarms depends on the voltage transformer ratio (VT ratio), current transformer ratio (CT ratio), system type (example, number of phases) or the maximum voltage and maximum current limits programmed at the factory.

NOTE: VT ratio is the VT primary divided by the VT secondary and CT ratio is the CT primary divided by the CT secondary.

Standard alarm	Maximum setpoint value	Valid range
Over Current, Phase	(maximum current) x (CT ratio)	**0.000** to **99999.000** A
Under Current, Phase	(maximum current) x (CT ratio)	**0.000** to **99999.000** A
Over Current, Neutral	(maximum current) x (CT ratio) x (number of phases)	**0.000** to **99999.000** A
Over Current, Ground	(maximum current) x (CT ratio)	**0.000** to **99999.000** A
Over Voltage, L-L	(maximum voltage) x (VT ratio)	**0.00** to **999999.00** V
Under Voltage, L-L	(maximum voltage) x (VT ratio)	**0.00** to **999999.00** V
Over Voltage, L-N	(maximum voltage) x (VT ratio)	**0.00** to **999999.00** V
Under Voltage L-N	(maximum voltage) x (VT ratio)	**0.00** to **999999.00** V
Over Power, Active	(maximum voltage) x (maximum current) x (number of phases)	**0.0** to **9999999.0** kW

Standard alarm	Maximum setpoint value	Valid range
Over Power, Reactive	(maximum voltage) x (maximum current) x (number of phases)	**0.0** to **9999999.0** kvar
Over Power, Apparent	(maximum voltage) x (maximum current) x (number of phases)	**0.0** to **9999999.0** kVA
Over Demand Active Power, Present	(maximum voltage) x (maximum current) x (number of phases)	**0.0** to **9999999.0** kW
Over Demand Active Power, Last	(maximum voltage) x (maximum current) x (number of phases)	**0.0** to **9999999.0** kW
Over Demand Active Power, Predicted	(maximum voltage) x (maximum current) x (number of phases)	**0.0** to **9999999.0** kW
Over Demand Reactive Power, Present	(maximum voltage) x (maximum current) x (number of phases)	**0.0** to **9999999.0** kvar
Over Demand Reactive Power, Last	(maximum voltage) x (maximum current) x (number of phases)	**0.0** to **9999999.0** kvar
Over Demand Reactive Power, Predicted	(maximum voltage) x (maximum current) x (number of phases)	**0.0** to **9999999.0** kvar
Over Demand Apparent Power, Present	(maximum voltage) x (maximum current) x (number of phases)	**0.0** to **9999999.0** kVA
Over Demand Apparent Power, Last	(maximum voltage) x (maximum current) x (number of phases)	**0.0** to **9999999.0** kVA
Over Demand Apparent Power, Predicted	(maximum voltage) x (maximum current) x (number of phases)	**0.0** to **9999999.0** kVA
Over Voltage Unbalance	(maximum voltage) x (VT ratio)	**0** to **99**%
Phase Loss	(maximum voltage) x (VT ratio)	**0.00** to **999999.00**

9.5.5.3 Power factor (PF) alarms

You can set up a Leading PF or Lagging PF alarm to monitor when the circuit's power factor goes above or below the threshold you specify.

The Leading PF and Lagging PF alarms use the power factor quadrants as the values on the y-axis, with quadrant II on the lowest end of the scale, followed by quadrant III, quadrant I, and finally quadrant IV on the highest end of the scale.

Quadrant	PF values	Lead/Lag
II	0 to -1	Leading (capacitive)
III	-1 to 0	Lagging (inductive)
I	0 to 1	Lagging (inductive)
IV	1 to 0	Leading (capacitive)

Leading PF alarm

The Leading PF alarm monitors an over setpoint condition.

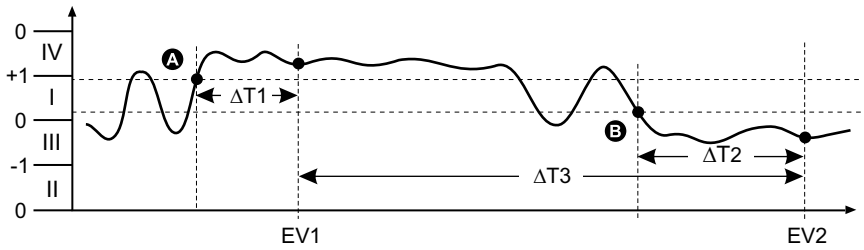

A	Pickup setpoint	ΔT2	Dropout time delay (in seconds)
B	Dropout setpoint	EV2	End of alarm condition
ΔT1	Pickup delay period (in seconds)	ΔT3	Alarm duration (in seconds)
EV1	Start of alarm condition		

Lagging PF alarm

The Lagging PF alarm monitors an under setpoint condition.

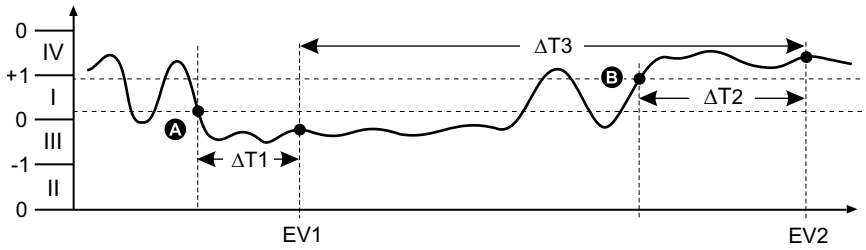

A	Pickup setpoint	ΔT2	Dropout time delay (in seconds)
B	Dropout setpoint	EV2	End of alarm condition
ΔT1	Pickup delay period (in seconds)	ΔT3	Alarm duration (in seconds)
EV1	Start of alarm condition		

9.5.5.4 Phase loss alarm

The phase loss alarm is an under setpoint alarm that monitors the voltages on a 3-phase system and triggers the alarm when one or two phases fall below the pickup setpoint setting and remain there long enough to satisfy the pickup time delay period.

When all of the phases rise above the dropout setpoint setting and remain there long enough to satisfy the dropout time delay period, the alarm condition is set to OFF.

9.5.6 Alarm priorities

Each alarm has a priority level that you can use to distinguish between events that require immediate action and those that do not require action.

Alarm priority	Alarm display notification and recording method			
	Alarm LED	Alarm icon	Alarm details	Alarm logging
High	Blinks while the alarm is active.	Blinks while the alarm is active. Alarm icon remains displayed until acknowledged.	Click **Details** to display what caused the alarm to pickup or drop off. Click **Ack** to acknowledge the alarm.	Recorded in alarm log.
Medium	Blinks while the alarm is active.	Blinks while the alarm is active.	Click **Details** to display what caused the alarm to pickup or drop off.	Recorded in alarm log.
Low	Blinks while the alarm is active.	Blinks while the alarm is active.	Click **Details** to display what caused the alarm to pickup or drop off.	Recorded in alarm log.
None	No activity	None	None	Recorded in event log only.

NOTE: The alarm LED notification only occurs if the alarm/energy pulsing LED is configured for alarming.

Multiple alarm considerations

If multiple alarms with different priorities are active at the same time, the display shows the alarms in the order of alarm IDs.

9.5.7 Alarm setup overview

You can use the meter display or PowerLogic™ Engineering Suite to configure unary, digital, or standard (1-Sec) alarms.

If you make changes to the basic power meter setup, all alarms are disabled to help prevent undesired alarm operation. If you configure standard alarm setpoints using the display, any decimals previously configured using PowerLogic™ Engineering Suite are lost.

NOTICE
UNINTENDED EQUIPMENT OPERATION • Verify all alarm settings are correct and adjust, as necessary. • Re-enable all configured alarms. **Failure to follow these instructions can result in incorrect alarm functions.**

9.5.8 LED alarm indicator

You can use the meter's alarm/energy pulsing LED as an alarm indicator.

When set to detect alarms, the LED blinks to indicate an alarm condition.

9.5.9 Alarm display and notification

The meter notifies you when an alarm condition is detected.

Alarm icon

When a low, medium, or high priority alarm is tripped, this symbol appears at the top right corner of the display screen, indicating that an alarm is active:

For high priority alarms, the alarm icon remains displayed until you acknowledge the alarm.

Active alarms

When a pickup event occurs, the active alarm list appears on the **Active Alarms** screen.

Alarm details

Details about the alarms can be viewed using **Active Alarms**, **Alarm History**, **Unack. Alarms**, and **Alarm counter** screens on the meter display.

9.5.10 Active alarms list and alarm history log

Each occurrence of a low, medium, or high priority events is stored in the active alarms list and recorded in the alarm history log.

The active alarm list holds 40 entries at a time. The list works as a circular buffer, replacing old entries as new entries over 40 are entered into the active alarms list. The information in the active alarms list is volatile and re- initializes when the meter resets.

The alarm history log holds 40 entries. The log also works as a circular buffer, replacing old entries with new entries. The information in the alarm history log is non-volatile and is retained when the meter resets.

9.6 Multi-tariff

9.6.1 Overview

The multi-tariff feature allows you to set up different tariffs for storing energy values. The energy values for different tariffs are stored in registers that correspond to each of those tariffs. The meter supports configuration of up to 16 different tariffs. Multi-tariffs can be configured only through PowerLogic™ Engineering Suite or Modbus command.

Multi-tariff example

The multi-tariff feature can be used when a utility has set up tariff schedules with different rates based on what day or time-of-day energy is consumed.

In the following illustration, the area under the power curve equals the energy consumed.

Typically, the utility sets tariff schedules so the cost of energy is higher during high demand or high energy consumption times. How these “tariff energy containers” are configured determines how fast these containers fill, which correlates to increasing energy costs. The price per kWh is lowest at tariff T1 and highest at tariff T2.

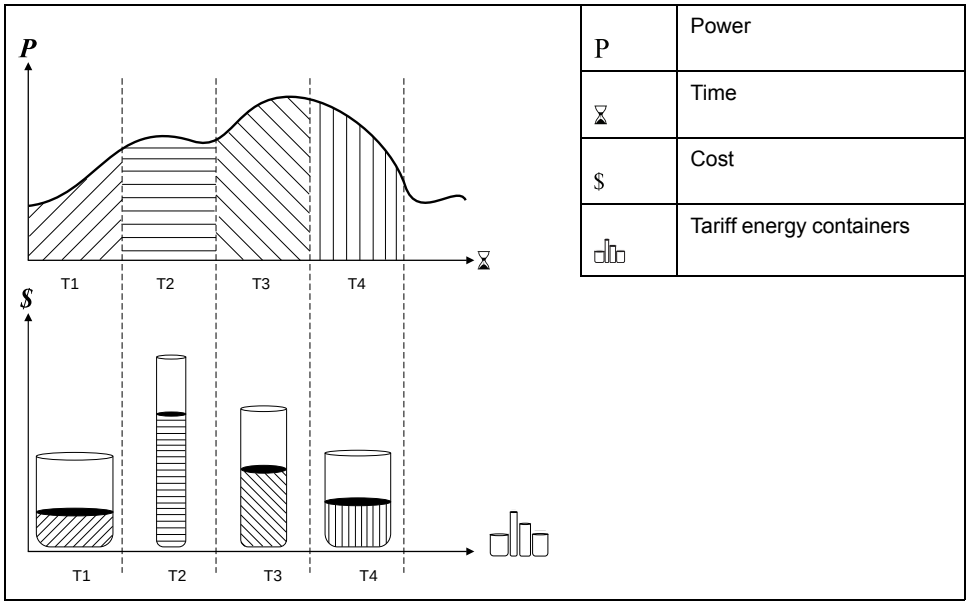

9.6.2 Multi-tariff implementation

The meter supports configuration of up to 16 different tariffs to measure and monitor energy usage that can be used in billing or cost applications.

There are three different tariff modes you can use to activate the multi-tariff registers:

- Command mode
- Time-of-day mode
- Input mode

9.6.3 Tariff setup

You can change tariffs and the tariff mode using PowerLogic™ Engineering Suite or Modbus command.

You can configure input mode and time-of-day mode using the PowerLogic™ Engineering Suite or Modbus command. It is recommended that you use PowerLogic™ Engineering Suite to configure time-of-day mode.

The active tariff is controlled based on the tariff mode.

- When the meter is set to command mode, the active tariff is controlled by the Modbus commands from your energy management system or other Modbus client.
- When the meter is set to input mode, the active tariff is controlled by the status of the digital inputs.
- When the meter is set to time-of-day mode, the active tariff is controlled by the day type, the start and end times, and the start and end dates.

9.6.4 Command mode overview

You can use command mode to set the active tariff on the device by sending a Modbus command or by using PowerLogic™ Engineering Suite.

The selected tariff is applied to the measured energy until another command is issued to activate a different tariff.

If you are using Modbus, search for your meter's Modbus register list at www.se.com to download the Modbus map.

9.6.5 Time-of-day mode overview

You can use time-of-day mode to create a tariff schedule that specifies where the meter stores energy or input metered data based on the time of year (month and day), the type of day (every day, weekend, weekday, or a specific day of the week), and the time of day. Configure the schedule using Modbus command or by using PowerLogic™ Engineering Suite.

The data collected from the different tariffs can then be used in energy audits or similar costing and budget planning purposes.

9.6.5.1 Time-of-day mode tariff validity

A valid time-of-day tariff has certain conditions and limitations:

- Each tariff must cover a unique time (tariffs cannot overlap), but there can be periods with no tariff.
- Any number of tariffs, from none to the maximum number of tariffs, can be applied.
- Time-of-day tariffs do not adjust for daylight savings time.
- Time-of-day tariffs include February 29th in leap years (however, it is not recommended to have February 29th as a start or end date, as that tariff would be invalid for non-leap years.
- Except for leap years, tariff dates are not year specific. If you wanted to create a tariff that starts on the first Monday in August, you need to enter the date for that year, then manually update the tariff information for the subsequent years.

Your device performs validation checks as you enter tariff information. It prompts you to change the information that you have entered or set the tariff to disabled if the tariff configuration is invalid. These checks can include:

- Start and end times must be different (for example, you cannot create a tariff that starts at 02:00 and ends at 02:00).
- Start time can only be earlier than end time for tariffs that are applied every day. You can create a daily tariff that starts at 06:00 and ends at 02:00, but these times are only valid for the Everyday tariff and invalid for the other tariff types.
- Start day must be earlier than end day if the days are in the same month. You cannot create a tariff that starts June 15 and ends June 12.

9.6.5.2 Time-of-day tariff creation methods

You can create time-of-day tariffs using one of two methods, or a combination of these methods.

The two methods of creating tariffs are:

- Time of year tariffs divide the year into multiple sections (usually seasons), where each section has one or more day types. For example, an eight-tariff configuration using this method could have Spring, Summer, Fall and Winter seasons that also use different weekend and weekday tariffs.
- Daily tariffs can divide days by day of the week, a weekday, a weekend, or every day, and can specify the time-of-day. For example, an eight-tariff configuration could have every day in the year divided into three-hour tariff periods or could have four tariffs for weekends and four tariffs for weekdays.

You can combine these methods, for example, if you wanted to create a tariff that applies on Mondays from January 1 to June 30, from 09:00 to 17:00. However, since only one tariff can be applied at any time, you cannot use an everyday or weekday tariff type because you already specified a tariff for the time periods 09:00 to 17:00.

Depending on how you configure the tariffs and the maximum number of tariffs supported by your meter, you may not be able to assign tariffs for the entire year, potentially leaving time gaps that do not have any tariff assigned to them.

9.6.5.3 Time-of-day mode tariff configuration considerations

The time-of-day tariff is not a calendar. The meter does not calculate the corresponding day of the week to a specific date, but February 29th is considered a valid date if you are programming the meter during a leap year.

When you enter tariff time, be aware that the displayed minute value includes the entire minute. For example, an end time of 01:15 includes the time from 01:15:00 through 01:15:59. To create a tariff period that starts right after this, you must set the next tariff's start time to 01:16. Although it may appear that there is a gap between these tariffs, there is not.

NOTE: You must always set the tariff times to UTC (GMT, Greenwich Mean Time), not local time. The GMT Offset (h) setup parameter does not apply to tariff times.

9.6.5.4 Example tariff configurations for a four-tariff system

In these examples, four tariffs are used to cover the entire year (there are no time periods that do not have an associated tariff).

Configuration 1: four tariffs with weekdays and weekends

Tariff	Type	Start date	End date	Start time	End time
1	Weekend	June 21	December 20	00:00	23:59
2	Weekend	December 21	June 20	00:00	23:59
3	Weekday	June 21	December 20	00:00	23:59
4	Weekday	December 21	June 20	00:00	23:59

NOTE: The end time of 23:59 is 23:59:59 or just before midnight.

All weekend days fall into one of two different tariffs, depending on the date. All weekdays fall into one of two different tariffs, depending on the date. This configuration does not use tariffs based on the time-of-day, or any day types other than weekend or weekday.

Example dates and corresponding tariffs:

- Friday, June 29 = tariff 3
- Sunday, November 28th = tariff 1

Configuration 2: one season for weekends, with off-peak and shoulder hours, two seasons for weekdays, with shoulder hours

Tariff	Type	Start date	End date	Start time	End time
1	Every day	January 1	December 31	23:00	04:59
2	Weekdays	May 1	September 20	00:00	22:59
3	Weekdays	October 1	April 30	05:00	22:59
4	Weekends	January 1	December 31	05:00	22:59

All days have a tariff applied between 23:00 and 04:59, corresponding to off-peak hours. All weekend days have a tariff applied from 05:00 to 22:59, corresponding to shoulder hours. All weekdays fall into one of two seasons (summer or winter) and have two tariffs applied throughout the day.

Example dates and corresponding tariffs:

- Wednesday, March 21, 08:00 = tariff 3
- Tuesday, January 10, 21:00 = tariff 3
- Sunday, June 24, 14:00 = tariff 4
- Friday, August 17, 00:00 = tariff 1

9.6.6 Input mode overview

You can use input mode to have the digital inputs of the device set to know which tariff is applied to the energy that is presently being consumed.

The number of different tariffs that can be applied is determined by the number of available digital inputs and the total number of tariffs supported by your device.

9.6.6.1 Input mode tariff configuration considerations

Digital inputs are available for tariffs if they are not used, or if they are only associated with alarms (Normal). To make a digital input available, you must manually disconnect the conflicting association before configuring tariffs.

NOTE: You must always set the tariff times to UTC (GMT, Greenwich Mean Time), not local time. The GMT Offset (h) setup parameter does not apply to tariff times.

To configure the tariffs using the PowerLogic™ Engineering Suite, see the PowerLogic™ Engineering Suite online help or in the PowerLogic™ Engineering Suite device configuration guide, available for download at www.se.com.

9.6.6.2 Digital input assignment for input control mode

You need to assign one or more digital inputs with non-exclusive associations to define the active tariff.

If a digital input is used for multi-tariff, it cannot be used for an exclusive association (such as Demand Sync or Input Metering), but digital inputs can be

shared with a non-exclusive association (such as Alarms). To make a digital input available for setting tariffs, any conflicting associations must be manually removed at the source of the original association.

You cannot configure any digital input tariff if digital input 1 is not available for association. Likewise, digital input 2 must be available to select more than two tariffs.

The status of the digital inputs is used to calculate the binary value of the active tariff, where off = 0 and on = 1. The calculation of the number of tariffs value can differ, depending on the number of digital inputs that can be selected (that is, inputs that can be associated with multi-tariff).

Digital inputs requirements for required number of tariffs

Number of tariffs required	Digital inputs required		Tariff selection conditions
	Configuration 1	Configuration 2	
1	—	1 (digital input 1)	Must use 1 digital input
2	1 (digital input 1)	2 (digital input 1 and 2)	Must use 1 or 2 digital inputs
3	—	2 (digital input 1 and 2)	Must use 2 digital inputs
4	2 (digital input 1 and 2)	3 (digital input 1, 2 and 3)	Must use 2 or 3 digital inputs
5	—	3 (digital input 1, 2 and 3)	Must use 3 digital inputs
6		3 (digital input 1, 2 and 3)	
7		3 (digital input 1, 2 and 3)	
8	3 (digital input 1, 2 and 3)	4 (digital input 1, 2, 3 and 4)	Must use 3 or 4 digital inputs
9	—	4 (digital input 1, 2, 3 and 4)	Must use 4 digital inputs
10	—		
11	—		
12	—		
13	—		
14	—		
15	—		
16	—		

Number of tariffs required	Digital inputs required		Tariff selection conditions
	Configuration 1	Configuration 2	
1	—	1 (digital input 1)	Must use 1 digital input
2	1 (digital input 1)	2 (digital input 1 and 2)	Must use 1 or 2 digital inputs
3	—	2 (digital input 1 and 2)	Must use 2 digital inputs
4	2 (digital input 1 and 2)	2 (digital input 1 and 2)	Must use 2 digital inputs

Configuration 1: 16 tariff assignment using 4 digital inputs

NOTE: There is no inactive tariff with this configuration.

Tariff	Digital input 4	Digital input 3	Digital input 2	Digital input 1
T1	0	0	0	0
T2	0	0	0	1
T3	0	0	1	0
T4	0	0	1	1
T5	0	1	0	0

Tariff	Digital input 4	Digital input 3	Digital input 2	Digital input 1
T6	0	1	0	1
T7	0	1	1	0
T8	0	1	1	1
T9	1	0	0	0
T10	1	0	0	1
T11	1	0	1	0
T12	1	0	1	1
T13	1	1	0	0
T14	1	1	0	1
T15	1	1	1	0
T16	1	1	1	1

Configuration 2: 15 tariff assignment using 4 digital inputs

Tariff	Digital input 4	Digital input 3	Digital input 2	Digital input 1
None*	0	0	0	0
T1	0	0	0	1
T2	0	0	1	0
T3	0	0	1	1
T4	0	1	0	0
T5	0	1	0	1
T6	0	1	1	0
T7	0	1	1	1
T8	1	0	0	0
T9	1	0	0	1
T10	1	0	1	0
T11	1	0	1	1
T12	1	1	0	0
T13	1	1	0	1
T14	1	1	1	0
T15	1	1	1	1

***** This digital input configuration (0000) means there are no active tariffs (all tariffs are disabled).

Configuration 1: 8 tariff assignment using 3 digital inputs

NOTE: There is no inactive tariff with this configuration.

Tariff	Digital input 3	Digital input 2	Digital input 1
T1	0	0	0
T2	0	0	1
T3	0	1	0
T4	0	1	1
T5	1	0	0
T6	1	0	1
T7	1	1	0
T8	1	1	1

Configuration 2: 8 tariff assignment using 4 digital inputs

NOTE: Digital input configuration 0000 means there are no active tariffs (all tariffs are disabled).

NOTE: Any configuration above T8 (that is, 1001 and higher) is invalid and therefore ignored by the meter (the active tariff does not change).

Tariff	Digital input 4	Digital input 3	Digital input 2	Digital input 1
None	0	0	0	0
T1	0	0	0	1
T2	0	0	1	0
T3	0	0	1	1
T4	0	1	0	0
T5	0	1	0	1
T6	0	1	1	0
T7	0	1	1	1
T8	1	0	0	0

Configuration 1: 4 tariff assignment using 2 digital inputs

NOTE: There is no inactive tariff with this configuration.

Tariff	Digital input 2	Digital input 1
T1	0	0
T2	0	1
T3	1	0
T4	1	1

Configuration 2: 3 tariff assignment using 2 digital inputs

NOTE: Digital input configuration 00 means there are no active tariffs (all tariffs are disabled).

Tariff	Digital input 2	Digital input 1
None	0	0
T1	0	1
T2	1	0
T3	1	1

Configuration 1: 2 tariff assignment using 2 digital inputs

NOTE: There is no inactive tariff with this configuration.

Tariff	Digital input 2	Digital input 1
T1	0	0
T2	0	1

Configuration 2: 2 tariff assignment using 2 digital inputs

NOTE: Digital input configuration 00 means there are no active tariffs (all tariffs are disabled).

Tariff	Digital input 2	Digital input 1
None	0	0
T1	0	1
T2	1	0

9.7 Measurements

9.7.1 Instantaneous measurements

The meter provides highly accurate 1-second measurements.

These measurements include true RMS, per phase, and total for:

- 3-phase voltage (line-to-line, line-to-neutral)
- 3-phase current, neutral, and ground current
- Active (kW), reactive (kvar), and apparent (kVA) power
- True PF (power factor)
- Displacement PF
- System frequency
- Voltage (line-to-line, line-to-neutral) and current unbalance

The voltage and current inputs are continuously monitored at a sampling rate of 128 points per cycle. This amount of resolution helps enable the meter to provide reliable measurements and calculated electrical values for various commercial, buildings, and industrial applications.

9.7.2 Energy measurements

The meter provides fully bidirectional, 4-quadrant, Class 0.5S/0.2S accurate energy metering.

The meter calculates and stores all accumulated active, reactive, and apparent energy measurements in non-volatile memory:

- Wh, varh, VAh (delivered and received)
- Wh, varh, VAh net (delivered - received)
- Wh, varh, VAh absolute (delivered + received)

Energy registers can be logged automatically on a programmed schedule. All energy parameters represent the total for all three phases. You can view accumulated energy from the display.

9.7.3 Preset energy

NOTE: Not applicable for MID/MIR meter models.

You can input the previous energy values when you replace the meter. Preset energy value cannot be set more than maximum energy overflow value (9.2233 E).

The preset energy values include active energy (Wh), reactive energy (varh), and apparent energy (VAh) (delivered and received).

9.7.4 Min/Max values

When readings reach their minimum or maximum values, the meter records the values with a date and timestamp and stores them in nonvolatile memory.

The meter’s real-time readings are updated once every 50 cycles for 50 Hz systems, or once every 60 cycles for 60 Hz systems.

9.7.5 Demand measurements

The meter provides present, last, predicted, and peak (maximum) demand, and a date/timestamp when the peak demand occurred.

The meter supports standard demand calculation methods, including sliding block, fixed block, rolling block, thermal, and synchronized.

Peak demand registers can be reset manually (passcode protected) or logged and reset automatically on a programmed schedule.

Demand measurements include:

- kW, kvar, kVA demand total, and per phase

  NOTE: Per phase demand is supported only through the Modbus communication.
- Amps demand average, per phase, neutral or ground.
- Demand calculation for pulse input metering (WAGES)

9.7.5.1 Power demand

Power demand is a measure of average power consumption over a fixed time interval.

NOTE: If not specified, references to demand are assumed to mean power demand.

The meter measures instantaneous consumption and can calculate demand using various methods.

9.7.5.1.1 Power demand calculation methods

Power demand is calculated by dividing the energy accumulated during a specified period by the length of that period.

How the meter performs this calculation depends on the method and time parameters you select (for example, timed rolling block demand with a 15-minute interval and 5-minute subinterval).

To be compatible with electric utility billing practices, the meter provides the following types of power demand calculations:

- Block interval demand
- Synchronized demand
- Thermal demand

You can configure the power demand calculation method from the display or software.

9.7.5.1.2 Block interval demand

For block interval demand method types, you specify a period interval (or block) that the meter uses for the demand calculation.

Select/configure how the meter handles that interval from one of these different methods:

Type	Description
Timed Sliding Block	Select an interval from 1 to 60 minutes (in 1-minute increments). If the interval is between 1 and 15 minutes, the demand calculation *updates every 15 seconds*. If the interval is between 16 and 60 minutes, the demand calculation *updates every 60 seconds*. The meter displays the demand value for the last completed interval.
Timed Block	Select an interval from 1 to 60 minutes (in 1-minute increments). The meter calculates and updates the demand at the end of each interval.
Timed Rolling Block	Select an interval and a subinterval. The subinterval must divide evenly into the interval (for example, three 5-minute subintervals for a 15-minute interval). Demand is *updated at the end of each subinterval*. The meter displays the demand value for the last completed interval.

Block interval demand example

The following illustration shows the different ways power demand is calculated using the block interval method. In this example, the interval is set to 15 minutes.

Figure 2 - Timed sliding block

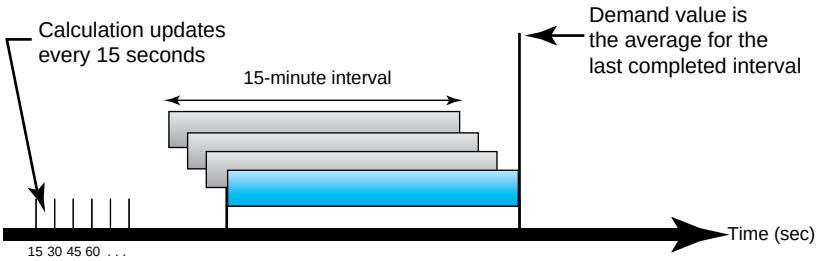

Figure 3 - Timed block

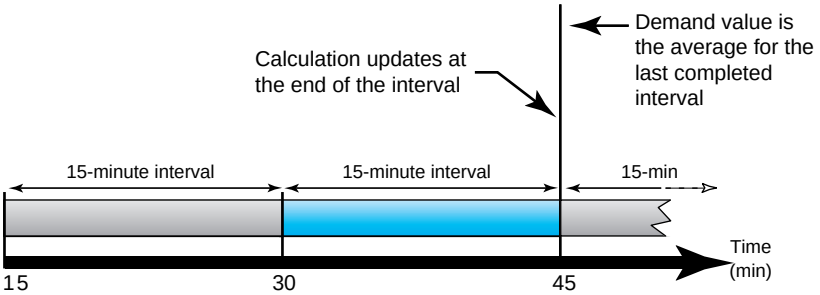

Figure 4 - Timed rolling block

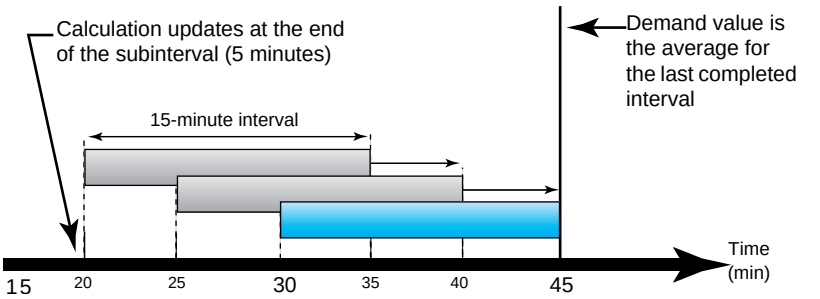

9.7.5.1.3 Synchronized demand

You can configure the demand calculations to be synchronized using an external pulse input, a command sent over communications, or the device's internal real-time clock.

Type	Description
Input synchronized demand	This method allows you to synchronize the demand interval of your meter with an external digital pulse source (such as another meter's digital output) connected to your meter's digital input. This helps synchronize your meter to the same time interval as the other meter for each demand calculation.
Command synchronized demand	This method allows you to synchronize the demand intervals of multiple meters on a communications network. For example, if a programmable logic controller (PLC) input is monitoring a pulse at the end of a demand interval on a utility revenue meter, you can program the PLC to send a command to multiple meters whenever the utility meter starts a new demand interval. Each time the command is sent, the demand readings of each meter are calculated for the same interval.
Clock synchronized demand	This method allows you to synchronize the demand interval to the meter's internal real-time clock. This helps you synchronize the demand to a particular time, typically on the hour (for example, at 12:00 am). If you select another time-of-day when the demand intervals are to be synchronized, the time must be specified in minutes from midnight. For example, to synchronize at 8:00 am, select 480 minutes.

NOTE: For these demand types, you can choose block or rolling block options. If you select a rolling block demand option, you need to specify a subinterval.

9.7.5.1.4 Thermal demand

Thermal demand calculates the demand based on a thermal response, which imitates the function of thermal demand meters.

The demand calculation updates at the end of each interval. You can set the demand interval from 1 to 60 minutes (in 1-minute increments).

Thermal demand example

The following illustration shows the thermal demand calculation. In this example, the interval is set to 15 minutes. The interval is a window of time that moves across the timeline. The calculation updates at the end of each interval.

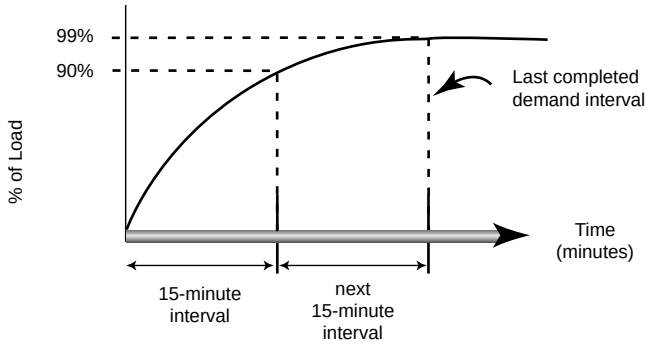

9.7.5.2 Current demand

The meter calculates current demand using the block interval, synchronized or thermal demand methods.

You can set the demand interval from 1 to 60 minutes in 1-minute increments (for example, 15 minutes).

9.7.5.3 Predicted demand

The meter calculates predicted demand for the end of the present interval for kW, kvar, and kVA demand, considering the energy consumption so far within the present (partial) interval and the present rate of consumption.

Predicated demand is updated according to the update rate of your meter.

The following illustration shows how a change in load can affect predicted demand for the interval. In this example, the interval is set to 15 minutes.

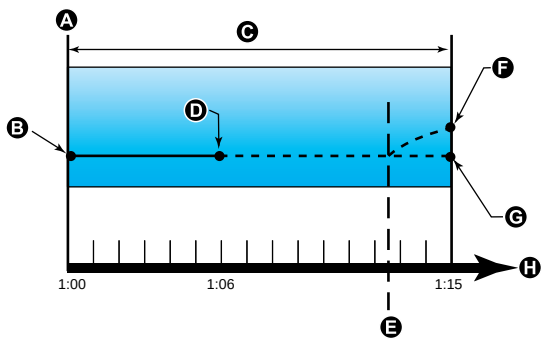

A	Beginning of interval	E	Change in load
B	Demand for last completed interval	F	Predicted demand if load is added during interval. The predicted demand increases to reflect increased demand
C	15-minute interval	G	Predicted demand if no load is added
D	Partial interval	H	Time

9.7.5.4 Peak demand

The meter records the peak (or maximum) values for kWD, kvarD, and kVAD power (or peak demand).

The peak for each value is the highest average reading since the meter was last reset. These values are maintained in the meter's non-volatile memory.

The meter also stores the date and time when the peak demand occurred. Along with the peak demand, the meter also stores the coinciding average 3-phase power factor. The average 3-phase power factor is defined as "demand kW/ demand kVA" for the peak demand interval.

9.7.5.5 Input metering demand

The input metering channels can be used to measure water, air, gas, electric, and steam utilities (WAGES).

The number of available metering input channels equals the number of unused digital inputs.

Typical WAGES utility meters have no communications capabilities, but they usually have a pulse output. The utility meter sends a pulse to its output each time a preset quantity or amount of (WAGES) energy is consumed or delivered. This preset quantity or amount is referred to as the pulse weight.

To monitor the utility meter, connect its pulse output to the power meter's digital input. Associate the digital input for input metering and configure the input metering operation mode, pulse weight, consumption units, and demand units.

9.7.6 Power and power factor

The sampled measurements taken at the meter's voltage and current inputs provide data for calculating power and power factor.

In a balanced 3-phase alternating current (AC) power system source, the AC voltage waveforms on the current-carrying conductors are equal but offset by one-

third of a period (a phase angle shift of 120 degrees between the three voltage waveforms).

9.7.6.1 Current phase shift from voltage

Electrical current can lag, lead, or be in phase with the AC voltage waveform, and is typically associated with the type of load – inductive, capacitive, or resistive.

For purely resistive loads, the current waveform is in phase with the voltage waveform. For capacitive loads, current leads voltage. For inductive loads, current lags voltage.

The following diagrams show how voltage and current waveforms shift based on load type under ideal (laboratory) conditions.

Current and voltage in phase (resistive)	Current leads voltage (capacitive)	Current lags voltage (inductive)
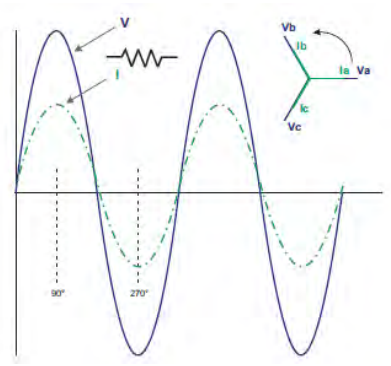	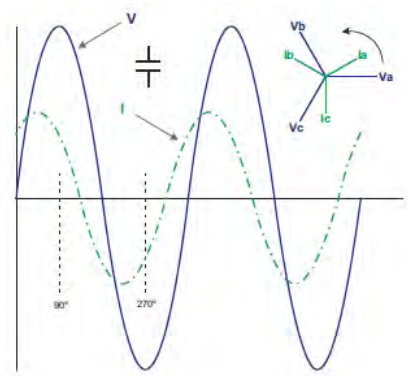	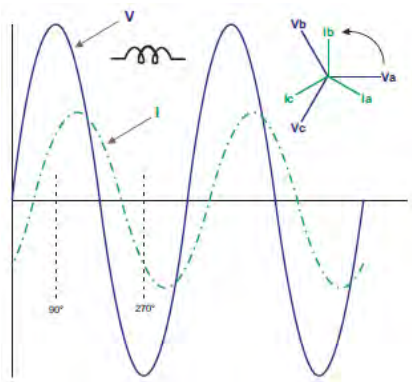

9.7.6.2 Real, reactive, and apparent power (PQS)

A typical AC electrical system load has both resistive and reactive (inductive or capacitive) components.

Real power, also known as active power (P) is consumed by resistive loads. Reactive power (Q) is either consumed by inductive loads or generated by capacitive loads.

Apparent power (S) is the capacity of your measured power system to provide real and reactive power.

The units for power are watts (W or kW) for real power P, vars (var or kvar) for reactive power Q, and volt-amps (VA or kVA) for apparent power S.

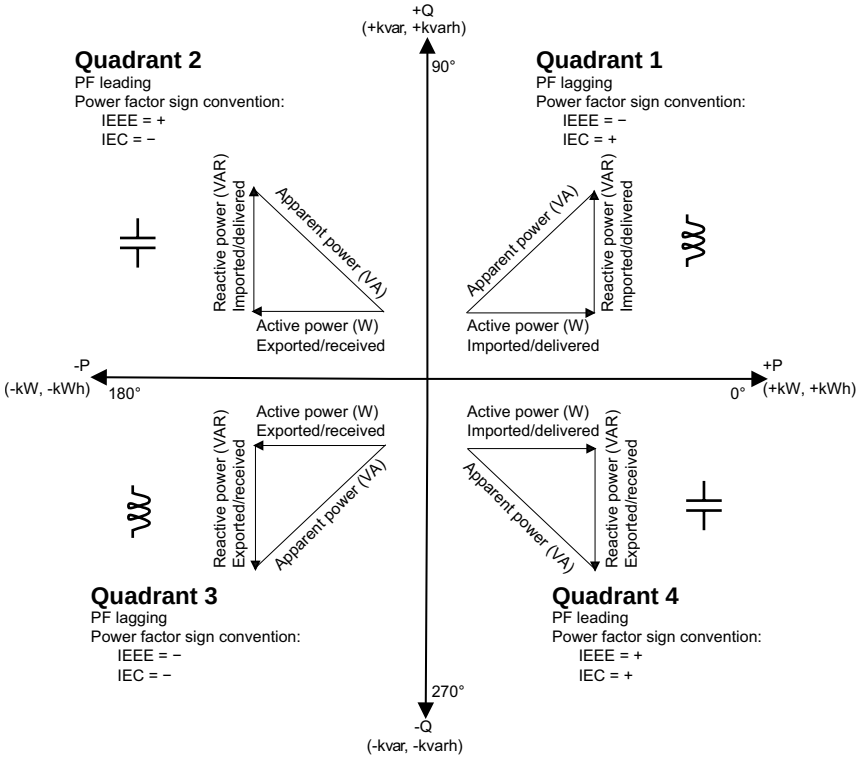

Power flow

Positive real power P(+) flows from the power source to the load. Negative real power P(-) flows from the load to the power source.

9.7.6.3 Power factor (PF)

Power factor (PF) is the ratio of real power (P) to apparent power (S).

PF is provided as a number between -1 and 1 or as a percentage from -100% to 100%, where the sign is determined by the convention.

$$PF = \frac{P}{S}$$

A purely resistive load has no reactive components, so its power factor is 1 (PF = 1, or unity power factor). Inductive or capacitive loads introduce a reactive power (Q) component to the circuit which causes the PF to become closer to zero.

True PF and displacement PF

The meter supports true power factor and displacement power factor values:

- True power factor includes harmonic content.
- Displacement power factor only considers the fundamental frequency.

NOTE: Unless specified, the power factor displayed by the meter is true power factor.

9.7.6.4 Power factor sign convention

Power factor sign (PF sign) can be positive or negative and is defined by the conventions used by the IEEE or IEC standards.

You can set the power factor sign (PF sign) convention that is used on the display to either IEC or IEEE.

PF sign convention: IEC

PF sign correlates with the direction of real power (kW) flow.

- Quadrant 1 and 4: Positive real power (+kW), the PF sign is positive (+).
- Quadrant 2 and 3: Negative real power (-kW), the PF sign is negative (-).

PF sign convention: IEEE

PF sign correlates with the PF lead/lag convention, in other words, the effective load type (inductive or capacitive):

- For a capacitive load (PF leading, quadrant 2 and 4), the PF sign is positive (+).
- For an inductive load (PF lagging, quadrant 1 and 3), the PF sign is negative (-).

9.7.6.5 Power factor register format

The meter provides power factor values in a variety of formats to suit your energy management software.

Power factor in IEC and lead/lag (IEEE) formats: Float32 and Int16U registers

The meter provides total power factor in IEC and lead/lag (IEEE) formats in both Float32 and Int16U data types. You can use these registers to bring power factor information into third-party software. These registers are interpreted using the standard IEC and IEEE sign conventions.

NOTE: For information on how to calculate actual power factor values from the values in Int16U registers, see your meter's Modbus register list, available from www.se.com.

Four quadrant power factor information: floating point registers

The meter also provides PF information (including sign and quadrant) in single floating-point registers for each of the PF values (for example, per-phase and total values for true and displacement PF, and associated minimums and maximums). The meter performs a simple algorithm to the PF value then stores it in the appropriate PF register.

The meter and software interpret these PF registers for reporting or data entry fields according to the following diagram:

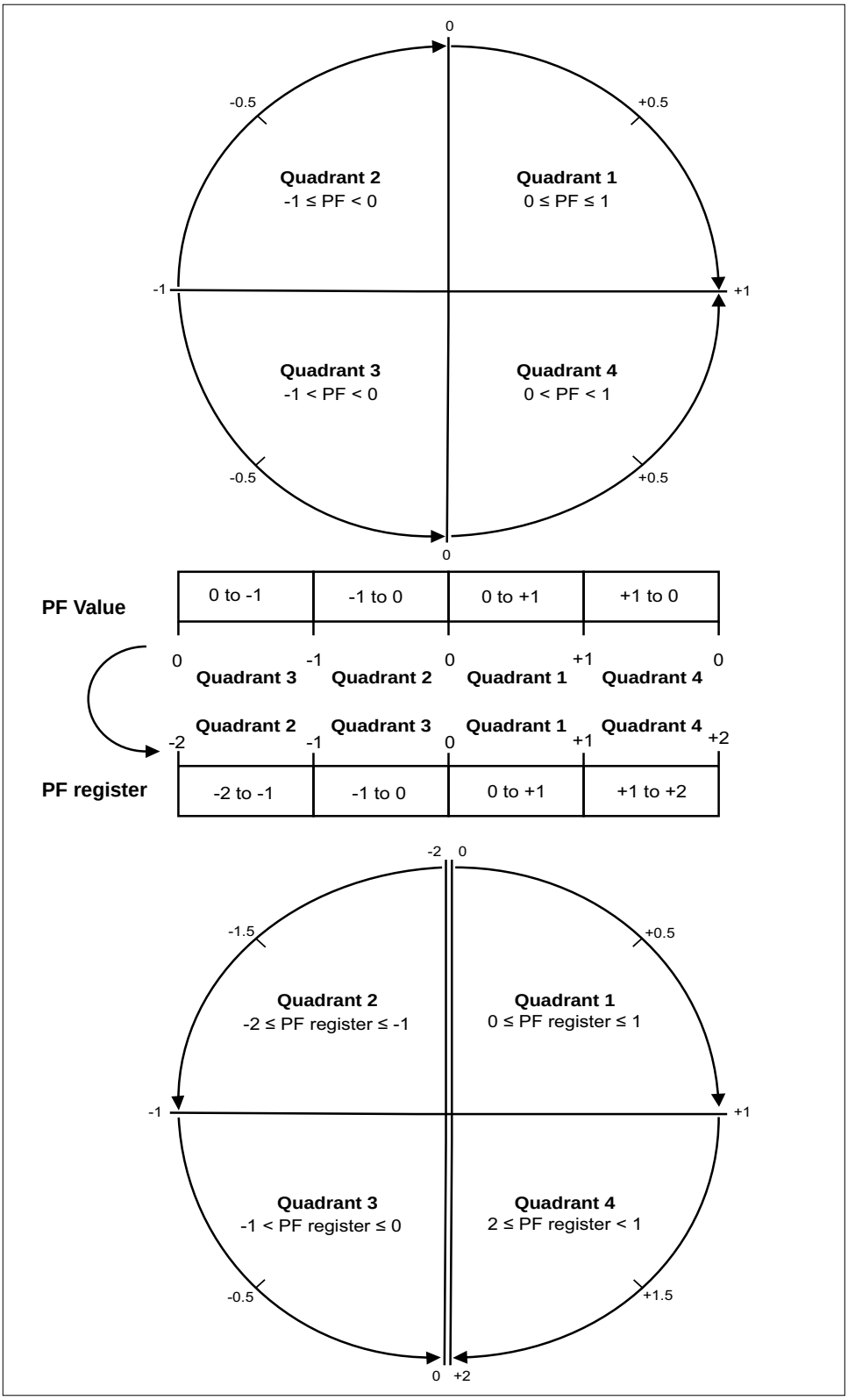

The PF value is calculated from the PF register value using the following formulas:

Quadrant	PF range	PF register range	PF formula
Quadrant 1	0 to +1	0 to +1	PF value = PF register value
Quadrant 2	-1 to 0	-2 to -1	PF value = (-2) - (PF register value)
Quadrant 3	0 to -1	-1 to 0	PF value = PF register value
Quadrant 4	+1 to 0	+1 to +2	PF value = (+2) - (PF register value)

Go to www.se.com and search for your meter's Modbus register list to download a copy.

9.7.7 Timers

The meter supports active load timer, operating timer, and input/output timer.

Active load timer

The active load timer keeps track of how much time the input current exceeds the specified load timer setpoint current.

Operating timer

The operating timer keeps track of how long the meter has been powered up.

Input/output timer

The input/output timer shows how long an input or output has been ON.

9.8 Power quality

9.8.1 Power quality measurements

The meter provides harmonic distortion metering up to the 31st harmonic.

The following power quality measurements are available:

- Individual harmonics (odd and even harmonics up to 31st)
- Total harmonic distortion (THD, thd) for current and voltage (line-to-line, line-to-neutral)
- Total demand distortion (TDD)

The following harmonics data is available on the display:

- Numeric magnitude and angle of the fundamental (first) harmonic.
- Graphical display of the 3rd to 15th harmonics, expressed as a percentage of the fundamental harmonic.

9.8.2 Harmonics overview

Harmonics are integer multiples of the fundamental frequency of the power system.

Harmonics information is valuable for power quality analysis, determining properly rated transformers, maintenance, and troubleshooting. Evaluation of harmonics is required for compliance to system power quality standards such as EN50160 and meter power quality standards such as IEC 61000-4-30.

Harmonics measurements include per-phase magnitudes and angles (relative to the fundamental frequency of the phase A voltage) for the fundamental and higher order harmonics relative to the fundamental frequency. The meter's power system setting defines which phases are present and determines how line-to-line or line-to-neutral voltage harmonics and current harmonics are calculated.

Harmonics are used to identify whether the supplied system power meets required power quality standards, or if non-linear loads are affecting your power system. Power system harmonics can cause current flow on the neutral conductor, and damage to equipment such as increased heating in electric motors. Power conditioners or harmonic filters can be used to minimize unwanted harmonics.

9.8.3 Total harmonic distortion %

Total harmonic distortion (THD%) is a measure of the total per-phase voltage or current harmonic distortion present in the power system.

THD% provides a general indication of the quality of a waveform. THD% is calculated for each phase of both voltage and current.

9.8.4 Total demand distortion

Total demand distortion (TDD) is the per-phase harmonic current distortion against the full load demand of the electrical system.

TDD indicates the impact of harmonic distortion in the system. For example, if your system is showing high THD values but a low demand, the impact of harmonic distortion on your system might be insignificant. However, at full load, the THD value for the current harmonics is equal to TDD, so this could negatively impact your system.

9.8.5 Harmonic content calculations

Harmonic content (H_C) is equal to the RMS value of all the non-fundamental harmonic components in one phase of the power system.

The meter uses the following equation to calculate H_C:

$$HC = \sqrt{(H_2)^2 + (H_3)^2 + (H_4)^2 \ldots}$$

9.8.6 THD% calculations

THD% is a quick measure of the total distortion present in a waveform and is the ratio of harmonic content (H_C) to the fundamental harmonic (H_1).

By default, the meter uses the following equation to calculate THD%:

$$THD\% = \frac{H_C}{H_1} \times 100\%$$

9.8.7 thd calculations

thd is an alternate method for calculating total harmonic distortion that uses the RMS value for the total harmonic content rather than the fundamental content.

The meter uses the following equation to calculate thd:

$$thd = \frac{H_C}{\sqrt{(H_1)^2 + (H_C)^2}} \times 100$$

9.8.8 TDD calculations

TDD (total demand distortion) evaluates the harmonic currents between an end user and a power source.

The harmonic values are based on a point of common coupling (PCC), which is a common point where each user receives power from the power source.

The meter uses the following equation to calculate TDD:

$$TDD = \left(\sqrt{(HCIA)^2 + (HCIB)^2 + (HCIC)^2}\right) / (ILoad) \times 100$$

Where `ILoad` is equal to the maximum demand load on the power system.

9.9 Verifying accuracy

9.9.1 Overview of meter accuracy

All meters are tested and verified at the factory in compliance with International Electrotechnical Commission (IEC) and American National Standards Institute (ANSI) standards.

Your digital power meter typically does not require re-calibration. However, in some installations a final accuracy verification of the meters is required, especially if the meters are used for revenue or billing applications.

For a list of accuracy standards that your meter complies to, contact your local Schneider Electric representative or download the meter brochure from www.se.com.

9.9.2 Accuracy test requirements

The most common method for testing meter accuracy is to apply test voltages and currents from a stable power source and compare the meter's readings with readings from a reference device or energy standard.

Signal and power source

The meter maintains its accuracy during voltage and current signal source variations, but its energy pulsing output needs a stable test signal to help produce accurate test pulses. The meter's energy pulsing mechanism needs approximately 10 seconds to stabilize after every source adjustment.

The meter must be connected to control power to conduct accuracy verification testing. Refer to your meter's installation documentation for power supply specifications.

⚠⚠DANGER

HAZARD OF ELECTRIC SHOCK, EXPLOSION, OR ARC FLASH

Verify the device's power source meets the specifications for your device's power supply.

Failure to follow these instructions will result in death or serious injury.

Control equipment

Control equipment is required for counting and timing the pulse outputs from an energy pulsing LED or digital output.

- Most standard test benches have an arm equipped with optical sensors to detect LED pulses (the photo diode circuitry converts detected light into a voltage signal).
- The reference device or energy standard typically has digital inputs that can detect and count pulses coming from an external source (i.e., the meter's digital output).

  NOTE: The optical sensors on the test bench can be disrupted by strong sources of ambient light (such as camera flashes, florescent tubes, sunlight reflections, floodlights, etc.). This can cause test errors. Use a hood, if necessary, to block out ambient light.

Environment

The meter should be tested at the same temperature as the testing equipment. The ideal temperature is about 23 ºC (73 ºF).

A warm-up time of 30 minutes is recommended before beginning energy accuracy verification testing. At the factory, the meters are warmed up to their typical operating temperature before calibration to help ensure that the meters reach their optimal accuracy at operating temperature.

Most high precision electronic equipment requires a warm-up time before it reaches its specified performance levels.

Reference device or energy standard

To help ensure the accuracy of the test, it is recommended that you use a reference device or reference energy standard with a specified accuracy that is 6 to 10 times more accurate than the meter under test. Before you start testing, the reference device or energy standard should be warmed up as recommended by the manufacturer.

NOTE: Verify the accuracy and precision of all measurement equipment used in accuracy testing (for example, voltmeters, ammeters, power factor meters).

9.9.3 Meter settings for accuracy testing

Your meter's power system and other parameters must be configured for accuracy testing.

Meter parameter	Value
Power system	3PH4W Wye Gnd (3-phase, 4 wire Wye with ground).
Energy pulse constant (Alarm/energy pulsing LED or digital output)	In sync with reference test equipment.

9.9.4 Verifying accuracy test

The following tests are guidelines for accuracy testing your meter.

⚠⚠ DANGER

HAZARD OF ELECTRIC SHOCK, EXPLOSION, OR ARC FLASH

- Apply appropriate Personal Protective Equipment (PPE) and follow safe electrical work practices. See NFPA 70E, CSA Z462 or other local standards.
- Turn off all power supplying this device and the equipment in which it is installed before working on or in the equipment.
- Always use a properly rated voltage sensing device to confirm that all power is off.
- Do not exceed the maximum ratings of this device.
- Verify the device's power source meets the specifications for your device's power supply.

Failure to follow these instructions will result in death or serious injury.

1. Turn off all power supplying this device and the equipment in which it is installed before working on the device or equipment.

2. Use a properly rated voltage sensing device to confirm that all power is off.
3. Connect the test voltage and current source to the reference device or energy standard. Ensure that all voltage inputs to the meter under test are connected in parallel and all current inputs are connected in series.

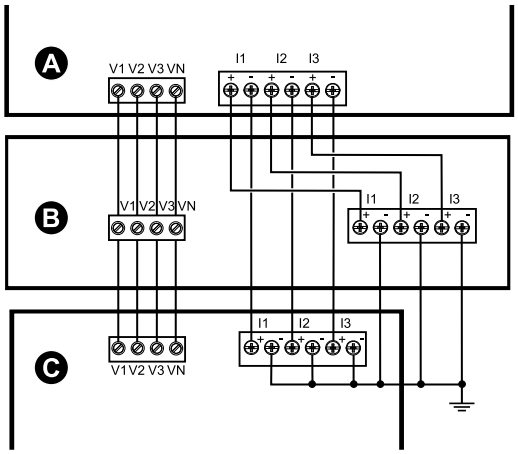

A	Reference device or energy standard
B	Test voltage and current source
C	Meter under test

4. Connect the control equipment used for counting the standard output pulses using one of these methods:

Option	Description
Energy pulsing LED	Align the red-light sensor on the standard test bench armature over the energy pulsing LED.
Digital output	Connect the meter's digital output to the standard test bench pulse counting connections.

NOTE: When selecting which method to use, be aware that energy pulsing LEDs and digital outputs have different pulse rate limits.

5. Before performing the verification test, let the test equipment power up the meter and apply voltage for at least 30 seconds. This helps stabilize the internal circuitry of the meter.
6. Configure the meter's parameters for verifying accuracy testing.
7. Depending on the method selected for counting the energy pulses, configure the meter's energy pulsing LED or one of the digital outputs to perform energy pulsing. Set the meter's energy pulse constant so it is in sync with the reference test equipment.
8. Perform accuracy verification on the test points. Run each test point for at least 30 seconds to allow the test bench equipment to read an adequate number of pulses. Allow 10 seconds of dwell time between test points.

9.9.4.1 Required pulses calculation for accuracy verification testing

Accuracy verification test equipment typically requires you to specify the number of pulses for a specific test duration.

The reference test equipment typically requires you to specify the number of pulses required for a test duration of "t" seconds. Normally, the number of pulses required is at least 25 pulses, and the test duration is greater than 30 seconds.

Use the following formula to calculate the required number of pulses:

Number of pulses = Ptot x K x t/3600

Where:

- Ptot = total instantaneous power in kilowatts (kW)
- K = the meter's pulse constant setting, in pulses per kWh
- t = test duration, in seconds (typically greater than 30 seconds)

9.9.4.2 Total power calculation for accuracy verification testing

Accuracy verification testing supplies the same test signal (total power) to both the energy reference/standard and the meter under test.

Total power is calculated as follows, where:

- Ptot = total instantaneous power in kilowatts (kW)
- VLN = test point line-to-neutral voltage in volts (V)
- I = test point current in amps (A)
- PF = power factor

The result of the calculation is rounded up to the nearest integer.

For a balanced 3–phase Wye system:

Ptot = 3 x VLN x I x PF x 1 kW/1000 W

NOTE: A balanced 3–phase system assumes that the voltage, current, and power factor values are the same for all phases.

For a single-phase system:

Ptot = VLN x I x PF x 1 kW/1000W

9.9.4.3 Percentage error calculation for accuracy verification testing

Accuracy verification testing requires you to calculate the percentage error between the meter being tested and the reference/standard.

Calculate the percentage error for every test point using the following formula:

Energy error = (EM - ES) / ES x 100%

Where:

- EM = energy measured by the meter under test
- ES = energy measured by the reference device or energy standard.

NOTE: If accuracy verification reveals inaccuracies in your meter, they may be caused by typical sources of test errors. If there are no sources of test errors present, please contact your local Schneider Electric representative.

9.9.5 Accuracy verification test points

The meter should be tested at full and light loads and at lagging (inductive) power factors to help ensure testing over the entire range of the meter.

The test amperage and voltage input rating are labeled on the meter.

Watt-hour test point	Sample accuracy verification test point
Full load	100% to 200% of the nominal current, 100% of the nominal voltage and nominal frequency at unity power factor or one (1).
Light load	10% of the nominal current, 100% of the nominal voltage and nominal frequency at unity power factor or one (1).
Inductive load (lagging power factor)	100% of the nominal current, 100% of the nominal voltage and nominal frequency at 0.50 lagging power factor (current lagging voltage by 60° phase angle).

VAR-hour test point	Sample accuracy verification test point
Full load	100% to 200% of the nominal current, 100% of the nominal voltage and nominal frequency at zero power factor (current lagging voltage by 90° phase angle).
Light load	10% of the nominal current, 100% of the nominal voltage and nominal frequency at zero power factor (current lagging voltage by 90° phase angle).
Inductive load (lagging power factor)	100% of the nominal current, 100% of the nominal voltage and nominal frequency at 0.87 lagging power factor (current lagging voltage by 30° phase angle).

9.9.6 Energy pulsing considerations

The meter's energy pulsing LED and pulse outputs are capable of energy pulsing within specific limits.

Description	Energy pulsing LED	Pulse output
Maximum pulse frequency	2.5 kHz	25 Hz
Minimum pulse constant	1 pulse per k_h	
Maximum pulse constant	9,999,000 pulses per k_h	

The pulse rate depends on the voltage, current and PF of the input signal source, the number of phases, and the VT and CT ratios.

If Ptot is the instantaneous power (in kW) and K is the pulse constant (in pulses per kWh), then the pulse period is:

$$\text{Pulse period (in seconds)} = \frac{3600}{K \times Ptot} = \frac{1}{\text{Pulse frequency (Hz)}}$$

9.9.7 VT and CT considerations

Total power (Ptot) is derived from the values of the voltage and current inputs at the secondary side and takes into account the VT and CT ratios.

The test points are always taken at the secondary side, regardless of whether VTs or CTs are used.

If VTs and CTs are used, you must include their primary and secondary ratings in the equation. For example, in a balanced 3-phase Wye system with VTs and CTs:

$$Ptot = 3 \times VLN \times \frac{VT_p}{VT_s} \times I \times \frac{CT_p}{CT_s} \times PF \times \frac{1\ kW}{1000\ W}$$

where Ptot = total power, VT_p = VT primary, VT_s = VT secondary, CT_p = CT primary, CT_s = CT secondary and PF = power factor.

9.9.8 Example calculations

This example calculation shows how to calculate power, pulse constants and maximum pulse frequency, and how to determine a pulse constant that helps reduce the maximum pulse frequency.

A balanced 3-phase Wye system uses 480:120 volt VTs and 100:5 amp CTs. The signals at the secondary side are 119 volts line-to-neutral and 4.99 amps, with a power factor of 0.85. The desired pulse output frequency is 20 Hz (20 pulses per second).

1. Calculate the typical total output power (Ptot):

$$Ptot = 3 \times 119 \times \frac{480}{120} \times 4.99 \times \frac{100}{5} \times 0.85 \times \frac{1\ kW}{1000\ W} = 141.14\ kW$$

2. Calculate the pulse constant (K):

$$K = \frac{3600 \times (\text{pulse frequency})}{Ptot} = \frac{3600\ \text{seconds/hour} \times 20\ \text{pulses/second}}{121.14\ kW}$$

$$K = 594.4\ \text{pulses / kWh}$$

3. At full load (200% of nominal current = 10 A) and power factor (PF = 1), calculate the maximum total output power (Pmax):

$$Pmax = 3 \times 119 \times \frac{480}{120} \times 10 \times \frac{100}{5} \times 1 \times \frac{1\ kW}{1000\ W} = 285.6\ kW$$

4. Calculate the maximum output pulse frequency at Pmax:

$$\text{Maximum pulse frequency} = \frac{K \times Pmax}{3600} = \frac{594.4\ \text{pulses / kWh} \times 285.6\ kW}{3600\ \text{seconds/hour}}$$

$$\text{Maximum pulse frequency} = 47.2\ \text{pulses/second} = 47.2\ Hz$$

5. Check the maximum pulse frequency against the limits for the LED and digital outputs:
   - 47.2 Hz ≤ LED maximum pulse frequency (2.5 kHz)
   - 47.2 Hz > digital output maximum pulse frequency (25 Hz)

   NOTE: The maximum pulse frequency is within the limits for LED energy pulsing. However, the maximum pulse frequency is greater than the limits for digital output energy pulsing. Pulse output frequencies greater than 25 Hz will saturate the digital output and cause it to stop pulsing. Therefore, in this example, you can only use the LED for energy pulsing.

Adjustments to allow energy pulsing at the digital outputs

If you want to use the digital output, you must decrease the output pulse frequency, so it is within the limits.

Using the values from the earlier example, the maximum pulse constant for the digital output is:

$$Kmax = \frac{3600 \times (\text{digital output maximum pulse frequency})}{Pmax} = \frac{3600 \times 2.5}{285.6}$$

$$Kmax = 315.13\ \text{pulses per kWh}$$

1. Set the pulse constant (K) to a value below Kmax, for example, 300 pulses/kWh. Calculate the new maximum output pulse frequency at Pmax:

$$\text{New maximum pulse frequency} = \frac{K \times Pmax}{3600} = \frac{300\ \text{pulses/kWh} \times 285.6\ kW}{3600\ \text{seconds/hour}}$$

$$\text{New maximum pulse frequency} = 23.8\ \text{pulses/second} = 23.8\ Hz$$

2. Check the new maximum pulse frequency against the limits for the LED and digital outputs:
   - 23.8 Hz ≤ LED maximum pulse frequency (2.5 kHz)
   - 23.8 Hz ≤ digital output maximum frequency (25 Hz)

   As expected, changing K to a value below Kmax allows you to use the digital output for energy pulsing.
3. Set the new pulse constant (K) on your meter.

9.9.9 Typical sources of test errors

If you see excessive errors during accuracy testing, examine your test setup and test procedures to eliminate typical sources of measurement errors.

Typical sources of accuracy verification testing errors include:

- Loose connections of voltage or current circuits, often caused by worn-out contacts or terminals. Inspect terminals of test equipment, cables, test harness and the meter under test.
- Meter ambient temperature does not match 23 °C (73 °F).
- Floating (ungrounded) neutral voltage terminal in any configuration with unbalanced phase voltages.
- Inadequate meter control power, resulting in the meter resetting during the test procedure.
- Ambient light interference or sensitivity issues with the optical sensor.
- Unstable power source causing energy pulsing fluctuations.
- Incorrect test setup: not all phases connected to the reference device or the energy standard. All phases connected to the meter under test should also be connected to the reference meter/standard.
- Moisture (condensing humidity), debris or pollution present in the meter under test.

9.10 Revenue (MID/MIR meter models)

9.10.1 Overview

The meter includes a revenue lock feature available in MID/MIR compliant variants (meter models certified under the *Measuring Instruments Directive 2014/32/EU* for sub-billing applications). This feature improves security by preventing unauthorized changes to revenue-critical parameters and helps reduce the risk of tampering or manipulating metering data.

After the meter is revenue-locked, only authorized users can perform revenue-related configuration tasks.

9.10.2 Revenue metering components

To meet government regulations and utility security requirements, the meter incorporates display passcode entry to reset meter values, for example, Master reset.

9.10.3 Revenue firmware security features

Your revenue meter has additional firmware security features.

When revenue-locked, you cannot perform resets, configure some revenue-specific parameters, or upgrade your meter.

Firmware upgrades

You cannot upgrade a locked meter.

To upgrade your meter, you must:

- Follow the unlocking procedure to unlock the meter. See Unlocking the revenue meter, page 78.
- Perform the upgrade.
- Follow the locking procedure to lock the meter. See Locking the revenue meter, page 78.

  NOTE: For MID/MIR meter models, the meter supports a maximum of 25 firmware upgrade attempts, including both successful and unsuccessful attempts. After this limit is reached, no further firmware upgrades are permitted.

9.10.4 Protected setup parameters and functions

Your meter has features and settings that cannot be changed when the meter is revenue-locked. To prevent modifications to revenue-related settings and data on your meter, some of the features and parameters on your meter cannot be edited when the meter is revenue-locked.

Protected setup parameters

Settings	Protected status	Description
Power system settings	Yes	You cannot change any power system settings when the meter is locked (for example, power system type, VT and CT connections, VT and CT primary and secondary values, system frequency, and phase rotation). **NOTE:** For MID/MIR compliance, the Power System must be set to either 3PH4W Wye Gnd (3-phase 4-wire wye grounded) or 3PH3W Dlt Ungnd (3-phase 3-wire delta ungrounded) or 1PH2W LN (Single-phase 2-wire line-to-neutral).
Meter label	Yes	You cannot change the meter label when the meter is locked.
Meter time settings	Yes	You cannot change the meter's date when the meter is locked.
Energy pulsing	Yes	The alarm/energy pulsing LED on the MID/MIR compliant models is permanently set for energy pulsing and cannot be disabled or used for alarms. All other setup parameters for the energy pulsing LED are also permanently set and cannot be modified. The settings are fixed at: • Mode (Control) = Energy (energy pulsing) • Pulses per k_h (Pulse Rate) = 10,000 (pulses per kWh) **NOTE:** The pulses per kWh reflect uncompensated values only. This means that the PT and CT values are ignored, and the pulses represent the raw energy calculated from the metering inputs. • Channel (Parameter) = Active Energy Del+Rec
Multi-tariff and input metering settings	Yes	You cannot change multi-tariff mode or settings when the meter is locked. For MID/MIR compliant models, you can only configure a subset of input metering settings when the meter is locked (channel label and demand code cannot be configured).

Protected functions

Functions	Description
Resets	After the meter is locked, the following functions are disabled: • Product reset • Global resets: Meter initialization (all) and energies • Single resets: Energy and multi-tariff
Control power (auxiliary power) interruption event	• After the meter is locked, the control power (auxiliary power) interruption event is acknowledged only after entering the **Revenue Lock** passcode.

For a complete list of protected functions and settings, see your meter's Modbus register list, available from www.se.com.

9.10.5 Revenue locking

Revenue locking your meter helps prevent modifications to revenue-related settings and data on your meter or tampering with your meter's voltage and current connections.

Revenue locking may be required to help meet government regulations and utility security requirements or can be used to help ensure the validity of revenue data.

You must configure all the lock-protected setup parameters before locking the meter.

9.10.5.1 Revenue-locking summary

You must configure and revenue lock your meter before installing it.

- Unlock your revenue meter if it is locked.

- Configure the required revenue settings specific for installation.

  NOTE: If you are using PowerLogic™ Engineering Suite to configure your meter, allow for any communication delays before removing power to your meter.
- Verify the revenue settings have been implemented.
- Clear all accumulated meter data.
- Revenue lock your meter.
- Verify the meter is revenue-locked.
- Install the meter and install the terminal covers according to your meter's instruction sheet.

10. Device specifications

Mechanical characteristics

IP degree of protection (IEC 60529)	Display: IP65 Meter body: IP30 (except connectors) Connectors: IP20 with terminal covers installed, IP10 without terminal covers
Mounting position	Vertical
Display type	Color LCD, 320 x 240 resolution
Display backlight	Backlit LCD, multilingual, bar graphs, 6 lines, 4 concurrent values
Viewable area	72.69 x 55.1 mm (2.86 x 2.17 in)
Keypad	4-button
Weight	< 0.417 kg (< 0.919 lb)
Dimensions W x H x D Protrusion from cabinet	96 x 96 x 74 mm (3.78 x 3.78 x 2.91 in) [depth of meter from housing mounting flange] 15.5 mm (0.61 in)
Panel thickness	6 mm (0.24 in) maximum

Electrical characteristics

Table 38 - Measurement accuracy

- Measurement type: True RMS on three-phase (3P, 3P + N), 128 samples per cycle, zero blind
- IEC 61557-12:2018, BS EN IEC 61557-12:2022: PMD/[SD|SS]/K70/0.5 / PMD/[SD|SS]/K70/0.2

Measurement type	Class of accuracy
Active energy	Class 0.5S/0.2S as per IEC 62053-22:2020, BS EN 62053-22:2021 at 1 A/5 A $I_{nominal}$
Reactive energy	Class 2 as per IEC 62053-24:2020, BS EN 62053-24:2021 at 1 A/5 A $I_{nominal}$
Active power	Class 0.5/0.2 as per IEC 61557-12:2018, BS EN IEC 61557-12:2022
Apparent power	Class 0.5/0.2 as per IEC 61557-12:2018, BS EN IEC 61557-12:2022
Reactive power	Class 2 as per IEC 61557-12:2018, BS EN IEC 61557-12:2022
Current, phase	Class 0.5/0.2 as per IEC 61557-12:2018, BS EN IEC 61557-12:2022
Voltage (L-N)	Class 0.5/0.2 as per IEC 61557-12:2018, BS EN IEC 61557-12:2022
Frequency	Class 0.05
Power factor	±0.005 Count/±0.002 Count

NOTE: Reactive power and energy are calculated according to IEC 62053-24:2020, BS EN 62053-24:2021. Harmonics are not included in this calculation.

Table 39 - Power quality accuracy

Measurement type	Class of accuracy
Voltage unbalance	Class 0.5 as per IEC 61557-12:2018, BS EN IEC 61557-12:2022
Voltage harmonics	Class 2 as per IEC 61557-12:2018, BS EN IEC61557-12:2022
Voltage THD/thd	Class 2 as per IEC 61557-12:2018, BS EN IEC 61557-12:2022
Current harmonics	Class 2 as per IEC 61557-12:2018, BS EN IEC 61557-12:2022
Current THD	Class 2 as per IEC 61557-12:2018, BS EN IEC 61557-12:2022

Table 40 - Voltage inputs

Maximum VT/PT primary	1.0 MV AC
Specified accuracy range	20...400 V L-N/35...690 V L-L (Wye) or 35...600 V L-L (Delta) UL listed up to 347 V L-N/600 V L-L
Measurement category / Overvoltage category	CAT III
Impedance	5 MΩ
Rated impulse voltage	6 kV for 1.2 µs
Frequency	Measured: 45...65 Hz Nominal: 50/60 Hz
Burden	< 0.2 VA at 240 V L-N

Table 41 - Current inputs

CT secondary	Nominal: 5 A or 1 A
Measured current	0.01...1(2) A / 0.05...5(10) A
Starting current	1 mA
Impedance	< 0.3 mΩ
Frequency	Measured: 45...65 Hz Nominal: 50/60 Hz
Burden	< 0.05 VA at 10 A

Table 42 - AC control power

Nominal AC voltage	277 V L-N (Range: 100...277 V L-N ± 10%) 415 V L-L (Range: 100...415 V L-L ± 10%)
Burden	6.2 VA/3.4 W max at 120 V L-N 8.2 VA/3.8 W max at 230 V L-N 13.5 VA/4.7 W max at 415 V L-L
Overvoltage category	CAT III 300 V L-N class per IEC 61010
Nominal frequency	50/60 Hz (Range: 45...65 Hz)
Ride-through time	30 ms typical at 120 V L-N and maximum burden 120 ms typical at 230 V L-N and maximum burden 430 ms typical at 415 V L-L and maximum burden

Table 43 - DC control power

Nominal DC voltage	250 V (Range: 125...250 V ± 20%)
Burden	3.2 W max at 250 V DC
Ride-through time	20 ms typical at 125 V DC and maximum burden
Overvoltage category	CAT III 300 V DC class per IEC 61010

Table 44 - Relay outputs (PM7151DUW / PM7231DUW / PM7232DUW / PM7252DUW / PM7332DUW / PM7351DUW)

Number	2 (selected models)
Maximum output frequency	0.5 Hz maximum (1 second ON/1 second OFF – minimum times)
Switching current	250 V AC at 8.0 A, 25 k cycles, resistive 30 V DC at 2.0 A, 75 k cycles, resistive

Table 44 - Relay outputs (PM7151DUW / PM7231DUW / PM7232DUW / PM7252DUW / PM7332DUW / PM7351DUW) (Continued)

	30 V DC at 5.0 A, 12.5 k cycles, resistive
Isolation	3 kV rms
Overvoltage category	CAT II

Table 45 - Digital outputs (Not available in PM7231DUW / PM7232DUW / PM7332DUW)

Number	1 or 2 (selected outputs)
Maximum load voltage	40 V DC
Maximum load current	20 mA
ON resistance	50 Ω maximum
Meter constant	1 to 9999999 pulses per k_h (k_h = kWh, kvarh or kVAh depending on the energy parameter selected)
Pulse width	50% duty cycle
Pulse ON time	Configurable (20 ms, 25 ms, 50 ms, 100 ms)
Maximum pulse frequency	≤ 25 Hz
Maximum pulse width	≤ 200 ms
Leakage current	0.03 µA
Isolation	5 kV rms

Table 46 - Digital inputs

Number	1 or 2 or 4 (selected models)
Voltage OFF	0...4 V DC
Voltage ON	18.5...36 V DC
Frequency	2 Hz (T ON min = T OFF min = 250 ms)
Input resistance	110 kΩ
Isolation	5 kV rms
Response time	20 ms
Wetting output	24 V DC/ 8 mA max
Input burden	2 mA at 24 V DC

Environmental characteristics

Operating temperature	Meter: -25...70 °C (-13...158 °F) Display: -20...70 °C (-4...158 °F)
Storage temperature	-40...+85 °C (-40...185 °F)
Humidity rating	Operating: 5...95% RH non-condensing at 50 °C (122 °F) Storage: 5% to 80% RH non-condensing Maximum dew point 37 °C (99 °F)
Pollution degree	2
Altitude	≤ 2000 m (6562 ft) CAT III / ≤ 3000 m (9843 ft) CAT II

Location	For indoor use in a stationary panel Must be permanently connected and fixed
Product life	15 years at 40 °C (104 °F), 95% RH

LEDs

Table 47 - LED indicators

Heartbeat/communications activity	Green LED
Alarm/energy pulsing output LED (Configurable)	Amber LED

Table 48 - Alarm/energy pulsing LED

Type	Amber LED, optical
Maximum pulse frequency	50 Hz
Maximum pulse rate	2.5 kHz
Pulse width	50% duty cycle (200 µs minimum ON time)
Meter constant	10000 pulses per k_h Configurable from 1 to 9999999 pulses per k_h (k_h = kWh, kvarh or kVAh) (Fixed at 10000 pulses per kWh on MID/MIR meter models)
Wavelength	590 to 635 nm

EMC (ElectroMagnetic Compatibility)

Harmonic current emissions	IEC 61000-3-2
Flicker emissions	IEC 61000-3-3
Immunity to electrostatic discharge	IEC 61000-4-2
Immunity to radiated fields	IEC 61000-4-3
Immunity to fast transients	IEC 61000-4-4
Immunity to surges	IEC 61000-4-5
Immunity to conducted disturbances, 150 kHz to 80 MHz	IEC 61000-4-6
Immunity to magnetic fields	IEC 61000-4-8
Immunity to voltage dips and interruptions	IEC 61000-4-11
Immunity for ring wave	IEC 61000-4-12
Immunity to damped oscillatory waves	IEC 61000-4-18
Radiated and conducted emissions	CISPR 32: Class B

Safety and product standards

Protective class	Protective class II Double insulated for user-accessible parts
Safety	IEC 61010-1:2010/AMD1:2016/COR1:2019 (Edition 3)

	EN 61010-1:2010+A1:2019 UL 61010-1, Edition 3:2023 IEC 61010-2-030:2017 (Edition 2) EN 61010-2-30:2021/A11:2021 UL 61010-2-030, Edition 2:2023 IEC 62052-31:2024 / BS EN 62052-31:2024 CAN/CSA-C22.2 No. 61010-1-12, Edition 3:2023 CSA C22.2 No. 61010-2-030:18, Edition 2:2018	
Standard compliance	IEC 62052-11:2020 IEC 62053-22:2020 IEC 62053-24:2020 IEC 61557-12:2018	BS EN IEC 62052-11:2021/A11:2022 BS EN 62053-22:2021 BS EN 62053-24:2021 BS EN IEC 61557-12:2022 BS EN 50470-1:2022 BS EN 50470-3:2022 WELMEC Guide 7.2 Software Guide Version 2025 ANSI C12.1:2024
Cybersecurity	RED-DA (EN 18031-1:2024) Adheres to IEC 62443-4-2 requirements	
EMC standards	EN 61326-1:2021 and IEC 61000 series (Sub standards) IEC 61326-1:2020 CISPR 11:2015+AMD1:2016+AMD2:2019 CISPR 32:2015 AMD 1:2020 EN 55011:2016/A2:2021 EN 55032:2015+A11:2020 IEC 62052-11:2020 USA: FCC 47 CFR Part 15 Subpart B Canada: ICES-003 Issue 7:2020	
RF standards	ETSI EN 300 328 V2.2.2 (2019-07) MPE: • EN IEC 62311:2020 / IEC 62311:2019 • EN 62479:2010 / BS EN 62479:2010 / IEC 62479:2010 USA • FCC 47 CFR Part 15 Subpart C • MPE: 47 CFR FCC Part 2.1091 Canada • ISED RSS-247 Issue 4 • ISED RSS-GEN Issue 5 + A1 + A2 • MPE: RSS-102 Issue 6 (2023-12) Australia/New Zealand • AS/NZS 4268:2017+A1:2021 • MPE: AS/NZS 2772.2:2016	
RF EMC standards	ETSI EN 301 489-1 V2.2.3 (2019-11) ETSI EN 301 489-17 V3.3.1 (2024-09)	

MID/MIR compliance

Additional specifications apply to the MID/MIR meter models (PM7151DUW / PM7211DUW / PM7231DUW / PM7351DUW).

Applicable MID/MIR standards and class index	BS/EN 50470-1 Class C BS/EN 50470-3 Class C
Type of measuring equipment	Static watt-hour meter
Intended use	Indoor use only, permanently mounted in residential, commercial, or light industrial applications, where levels of vibration and shock are of low significance
Mechanical environment	M1
Electromagnetic (EMC) environment	E2
Applicable measurements	C (kWh)
Voltage at voltage terminals	3PH4W Wye Gnd (3-phase 4-wire wye grounded): 3x63.5 V L-N/110 V L-L...3x400 V L-N/690 V L-L 3PH3W Dlt Ungnd (3-phase 3-wire delta ungrounded): 3x110...3x690 V L-L 1PH2W LN (Single-phase 2-wire line-to-neutral): 63.5...400 V L-N
Current Rating (Imin – Iref (Imax))	0.01...1(2) A / 0.05...5(10) A
Electrical network frequency	50 Hz
Impulse voltage rating	6 kV
AC voltage rating	4 kV

RS-485 communication (PM7112DUW / PM7211DUW / PM7212DUW / PM7222DUW / PM7231DUW / PM7232DUW / PM7332DUW)

Number of ports	1
Maximum cable length	1219 m (4000 ft)
Maximum number of devices (unit loads)	Up to 32 devices on the same bus
Parity	Even, Odd, None With One, None With Two (1 stop bit for Odd or Even parity, 2 stop bits for None With One and None With Two)
Baud rate	4800, 9600, 19200, 38400 baud
Protocol	Modbus RTU
Isolation	2.5 kV RMS galvanic isolation, double insulated

Ethernet communication (PM7142DUW / PM7151DUW / PM7252DUW / PM7351DUW)

Number of ports	1
Data rate	Up to 100 Mbps
Protocol	Modbus TCP and BACnet/IP

Bluetooth communication (PM7211DUW / PM7212DUW / PM7222DUW / PM7231DUW / PM7232DUW / PM7252DUW / PM7332DUW / PM7351DUW)

Version	5.3
Operating frequency band	2400 to 2483.5 MHz
Channel spacing	2 MHz
Channels	40
Modulation type	GFSK
Maximum output power (EIRP)	≤ 10 dBm (default: 0 dBm)

Real-time clock

Clock drift	< 0.5 seconds per day (typical) as per IEC 62054-21
Battery backup time	3 years without control power (typical)

Conformal coating

PCBAs assembled in this product are treated with UL approved conformal coating chemical.

Printed in:
Schneider Electric

Schneider Electric
1884 Boulevard de la Défense
92000 Nanterre
France

www.se.com

© 2026 Schneider Electric. All rights reserved.

7EN02-0489-00