XTOOL | SafetyPro™ AP2 Max

Quick Start Guide

xTool SafetyPro™ AP2 Max Remote Control

Kurzanleitung | Guía de inicio rápido | Guide de démarrage rapide | Guida rapida | Korte handleiding | Manual de referência rápida | Skrócona instrukcja obsługi | クイックガイド | 빠른 시작 가이드 | 快速入門指南 | 快速使用指南

XTOOL

V0.2_K0302000529

01

Multi-language versions and more information

To find user guides in multiple languages and more help, please visit support.xtool.com/article/2331 or scan the QR code.

Mehrsprachige Versionen und weitere Informationen

Falls Sie Benutzerhandbücher in mehreren Sprachen suchen und weitere Hilfe benötigen, besuchen Sie bitte support.xtool.com/article/2331 oder scannen Sie den QR-Code.

Versiones multilingües y más información

Para encontrar guías de usuario en varios idiomas y más ayuda, visite support.xtool.com/article/2331 o escanee el código QR.

Versions multilingues et informations complémentaires

Pour trouver des guides de l'utilisateur dans plusieurs langues et accéder à une assistance supplémentaire, veuillez consulter support.xtool.com/article/2331 ou scanner le code QR.

Versioni multilingue e ulteriori informazioni

Per manuali dell'utente in altre lingue o ulteriore assistenza, visitare support.xtool.com/article/2331 o scansionare il codice QR.

Meertalige versies en meer informatie

Ga voor gebruikershandleidingen in meerdere talen en meer hulp naar support.xtool.com/article/2331 of scan de QR-code.

Versões multi-idiomas e mais informações

Para encontrar manuais do utilizador em idiomas múltiplos e mais ajuda, visite, se faz o favor, support.xtool.com/article/2331 ou leia o código QR.

Wersje wielojęzyczne i więcej informacji

Aby znaleźć instrukcje obsługi w wielu językach i dodatkową pomoc, odwiedź stronę support.xtool.com/article/2331 lub zeskanuj kod QR.

複数言語バージョンと詳細情報

複数言語のユーザー ガイドと詳細なヘルプについては、support.xtool.com/article/2331 にアクセスするか、QRコードをスキャンしてください。

다중 언어 버전 및 추가 정보

다중 언어로 된 사용 설명서와 추가 도움말을 찾으려면 support.xtool.com/article/2331 페이지를 방문하거나 QR 코드를 스캔하십시오.

多語言版本及更多資訊

如需取得其他語言版本的使用者指南或幫助資訊，請前往 support.xtool.com/article/2331 或掃描 QR code。

多语言版本及更多信息

如需获取其他语言版本的用户指南或更多帮助信息，请访问 support.xtool.com/article/2331 或扫描二维码。你也可以访问 s.makextool.com/wiki/ap2-max 查看在线帮助。

support.xtool.com/article/2331

02

List of items

List of items ---------- 01

Meet xTool SafetyPro™ AP2 Max ---------- 02

Install xTool SafetyPro™ AP2 Max ---------- 06

Use xTool SafetyPro™ AP2 Max ---------- 14

Use with xTool software ---------- 15

Maintenance ---------- 16

List of items

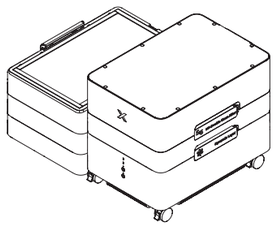

xTool SafetyPro™ AP2 Max

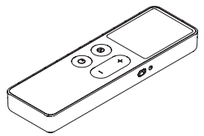

Remote control

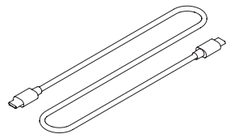

Charging cable for the remote control

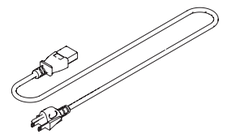

Power cable

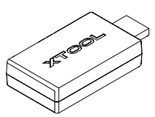

Bluetooth dongle

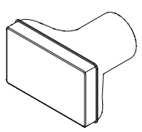

Airflow inlet connector

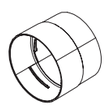

Pipe connector 1

Pipe connector 2

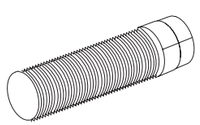

Smoke exhaust pipe

Pipe clamp

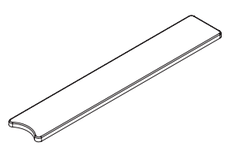

NFC baseplate

Quick start guide

Safety instructions

Note:

- The power cable varies according to the region in which the product is delivered.
- Pipe connector 1 is compatible with xTool machines' rigid, shape-adjustable exhaust pipes with a diameter of 80 mm.
- Pipe connector 2 is compatible with xTool machines' rigid, shape-adjustable exhaust pipes with a diameter of 65 mm.

Meet xTool SafetyPro™ AP2 Max

AP2 Max

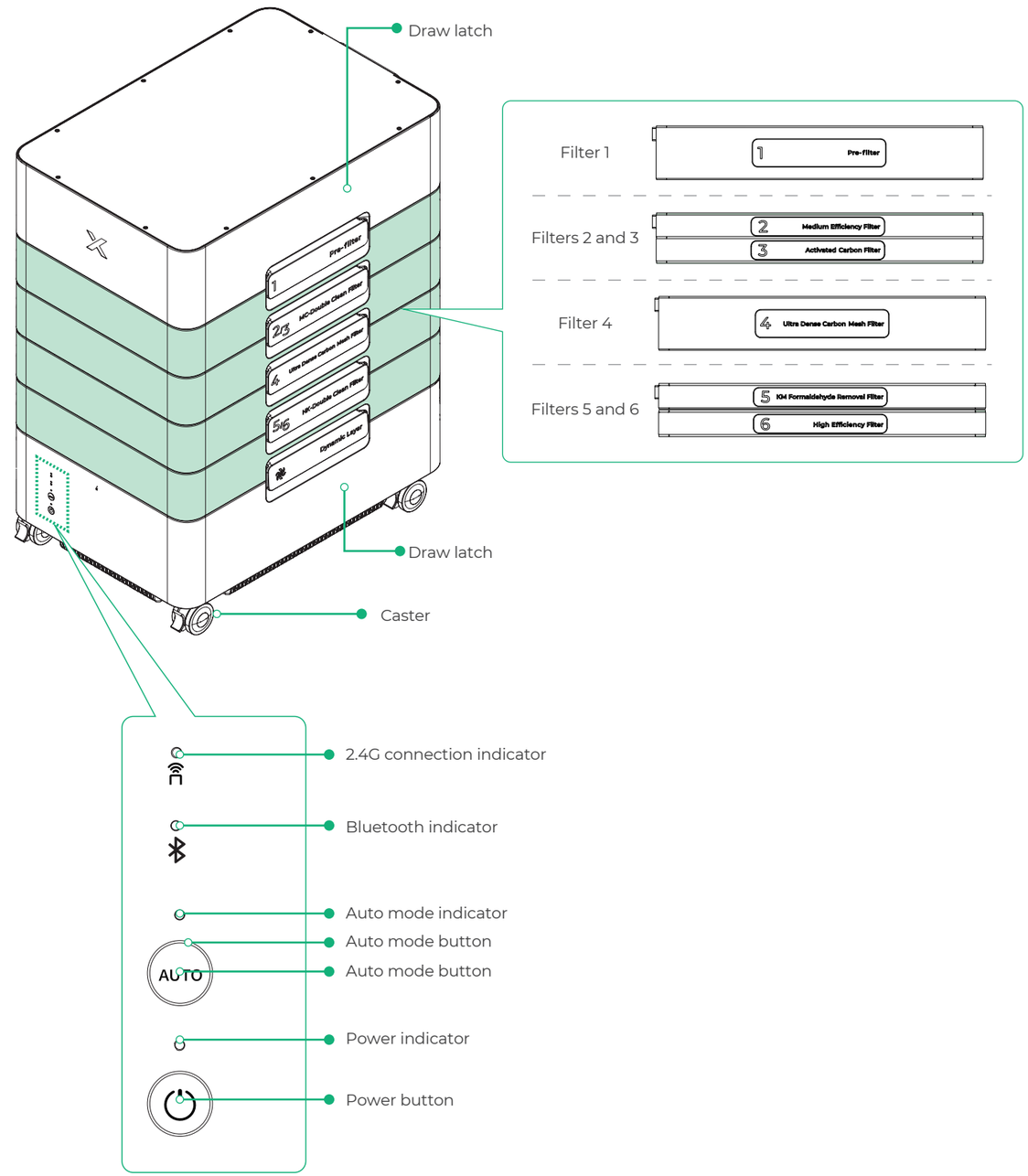

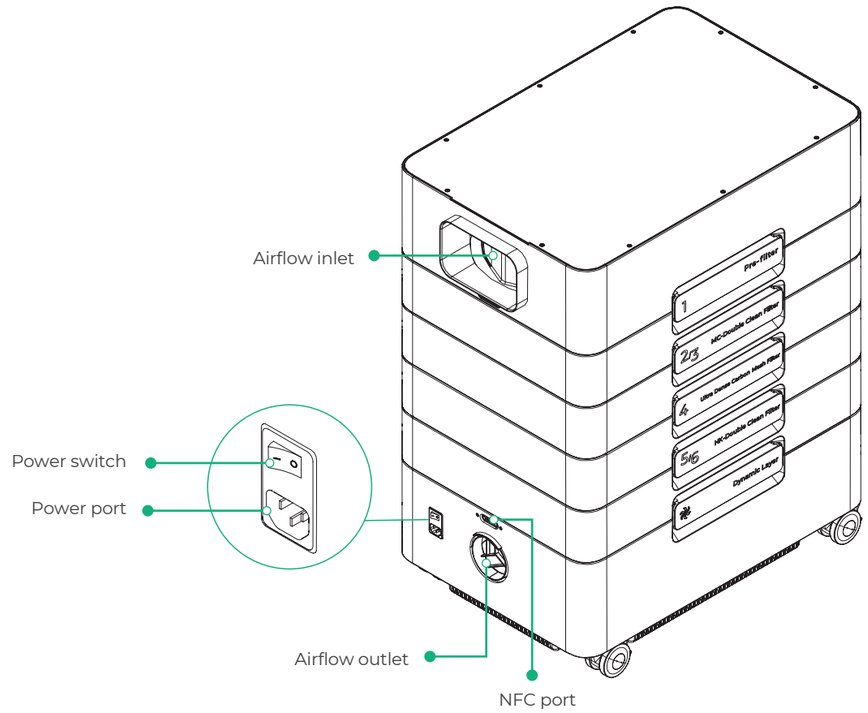

Remote control(RC01)

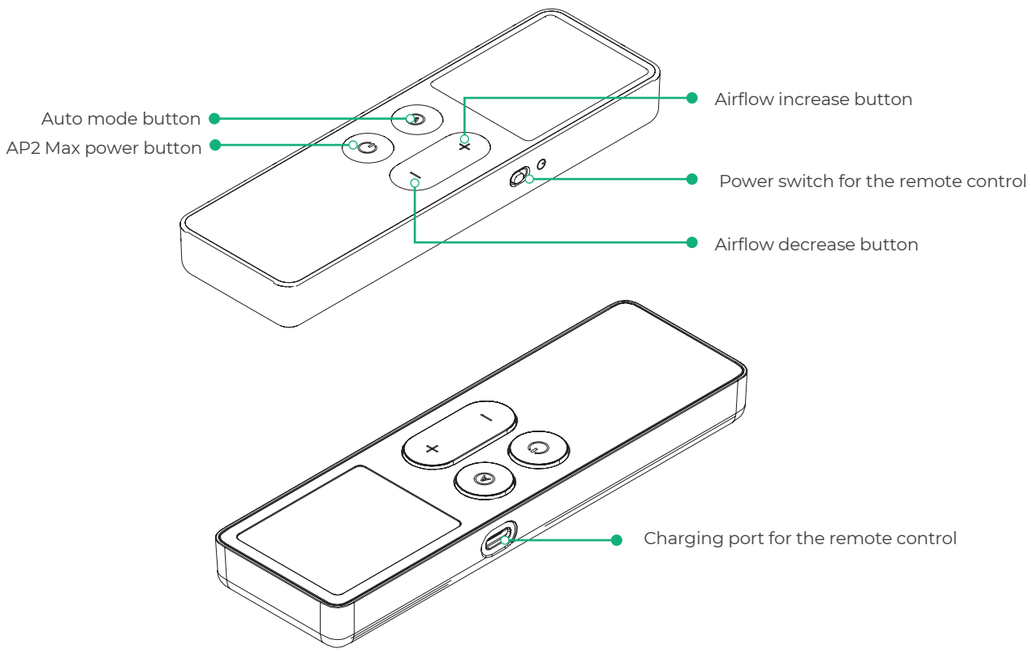

AP2 Max indicators description

Indicator	Indicator status	Device status
2.4G connection indicator	Blinking blue	The remote control enters pairing mode.
	Solid blue	The remote control has been connected to AP2 Max.
Bluetooth indicator	Blinking blue	AP2 Max is waiting to connect to the laser machine.
	Solid blue	AP2 Max has been connected to the laser machine.
Auto mode indicator	Solid blue	AP2 Max is working in auto mode.
	Off	AP2 Max is working in manual mode.
Power indicator	Solid blue	AP2 Max is powered on.

Remote control screen

Indicator icon	Indicator status	Description
Remote control battery	Solid green	Screen on/Charging/Power sufficient
	Blinking green	Battery power below 25%
	Off	Power depleted/Screen off
Bluetooth connection status	Blinking green	AP2 Max is waiting to connect to the laser machine.
	Solid green	AP2 Max has been connected to the laser machine.
	Off	AP2 Max is not connected to the laser machine.
Remote control connection status	Blinking green	The remote control is pairing with AP2 Max.
	Solid green	The remote control has been connected to AP2 Max.
	Off	The remote control is not connected to AP2 Max.
AP2 Max power status	Solid green	AP2 Max has been powered on.
	Off	AP2 Max is not powered on.
Fault indicator	Solid red	AP2 Max malfunctions.
	Off	AP2 Max is working properly.
Auto mode display	Solid green	AP2 Max is working in auto mode.
	Off	AP2 Max is working in manual mode.
Airflow volume (%)	Solid green (value range: 0-100)	AP2 Max is in manual mode, and the value is the current airflow volume.
Filter indicator 1 2 3 4 5 6	Solid green	The corresponding filter is normal.
	Blinking green	The corresponding filter's life is low (≤30%) and needs to be replaced.
	Off	The corresponding filter is missing.

Install xTool SafetyPro™ AP2 Max

1 Install the filters

(1) Release the draw latches.

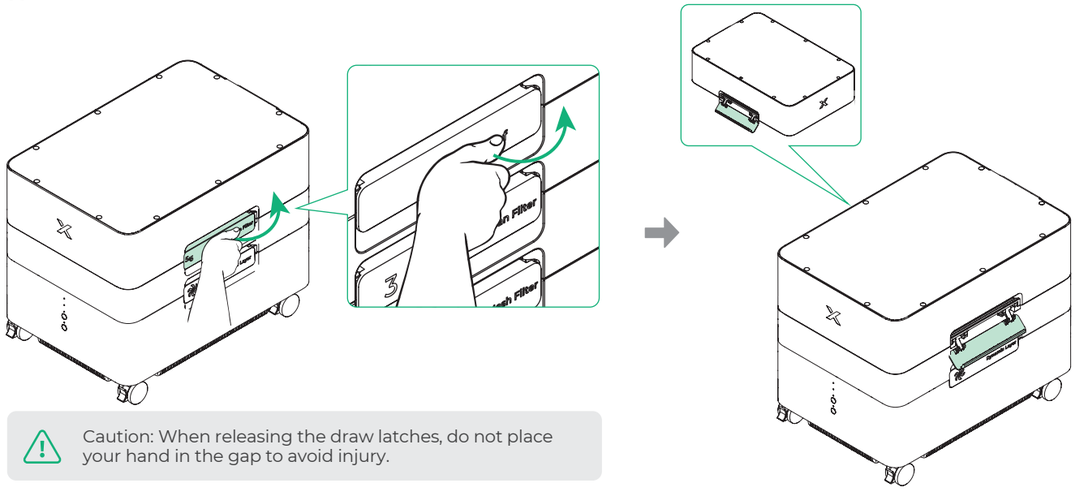

Caution: When releasing the draw latches, do not place your hand in the gap to avoid injury.

(2) Take the cyclone down.

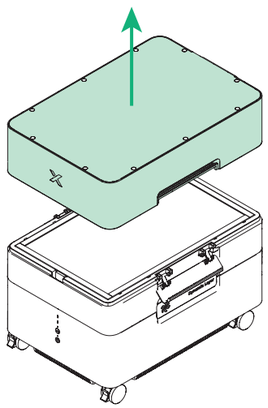

(3) Power switch.

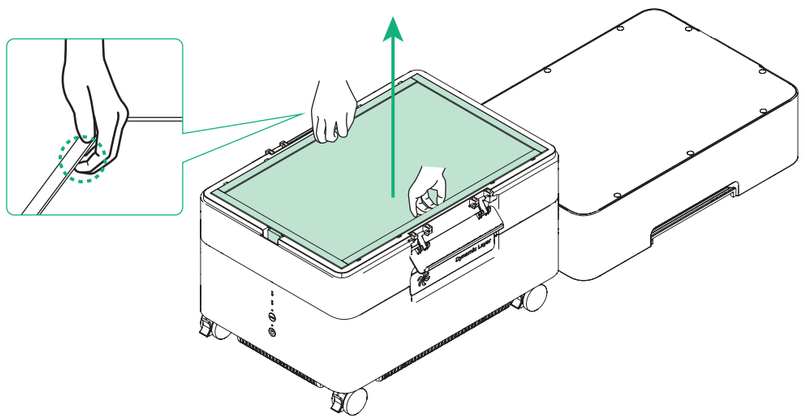

(4) Remove the plastic bag from the filters.

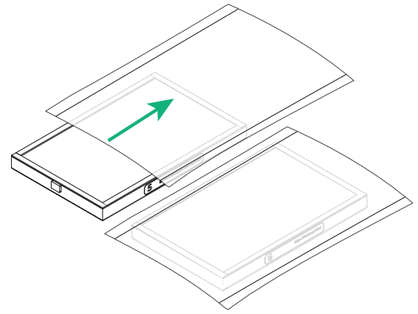

(5) Put the filters back. Note the up/down and front/back sides of the filters.

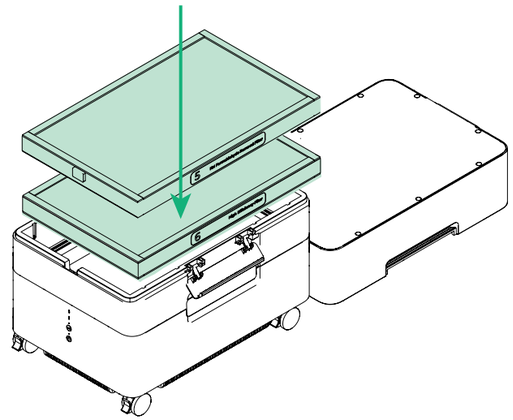

(6) Repeat steps 1 to 5 to prepare the other four filters.

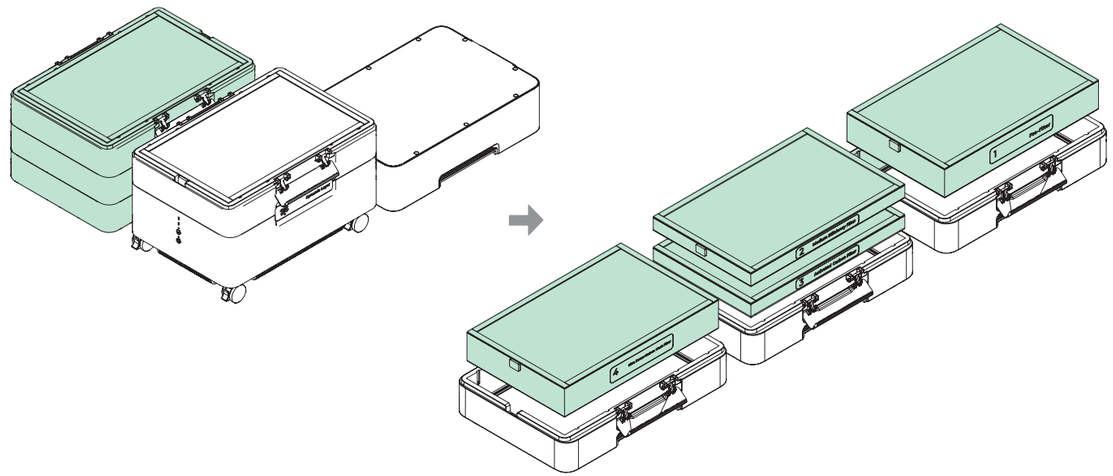

(7) Stack the cyclone and filters according to the illustrated sequence.

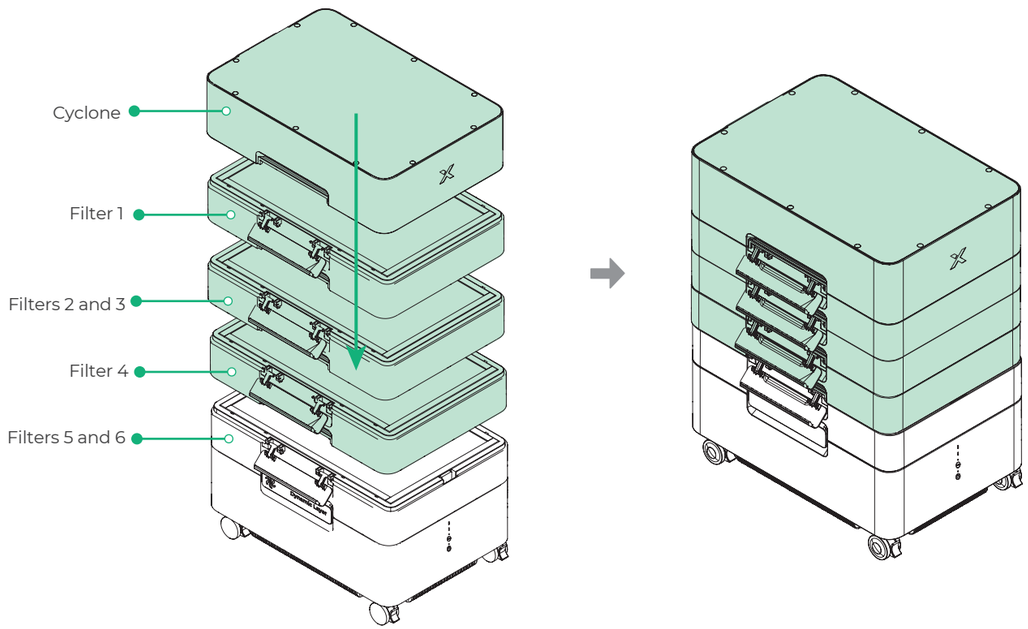

(8) Lock all draw latches.

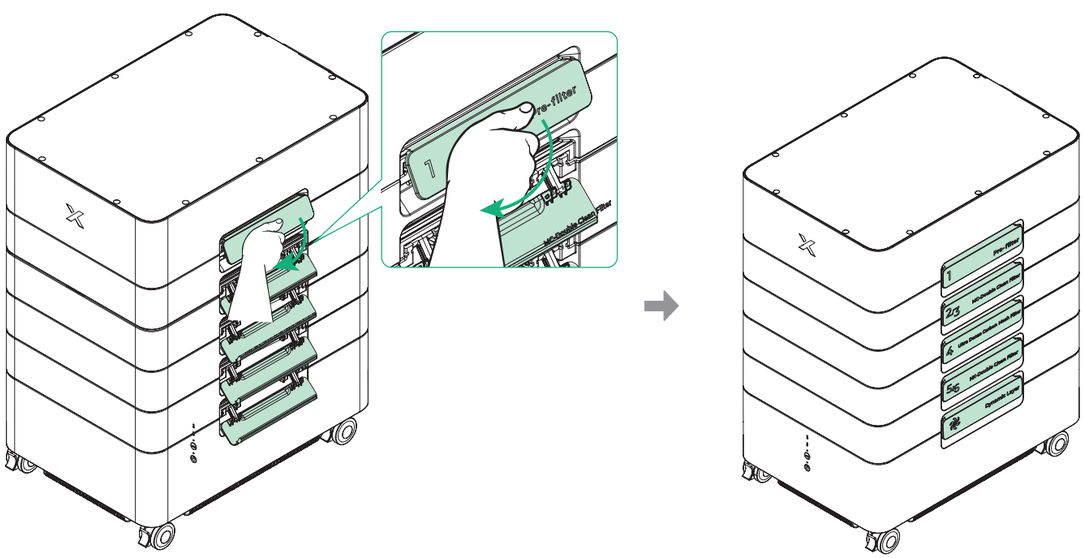

2 Install the NFC baseplate

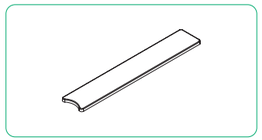

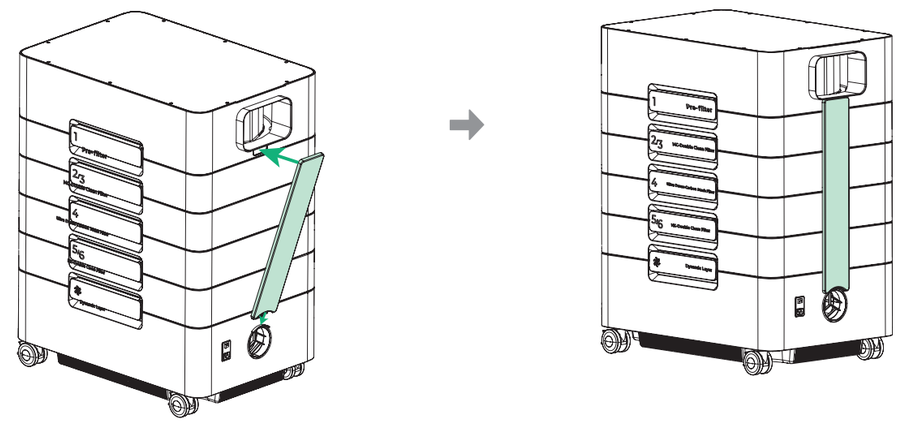

3 Place AP2 Max at the desired location

Unlock the casters, move AP2 Max to the desired location, and then lock the casters.

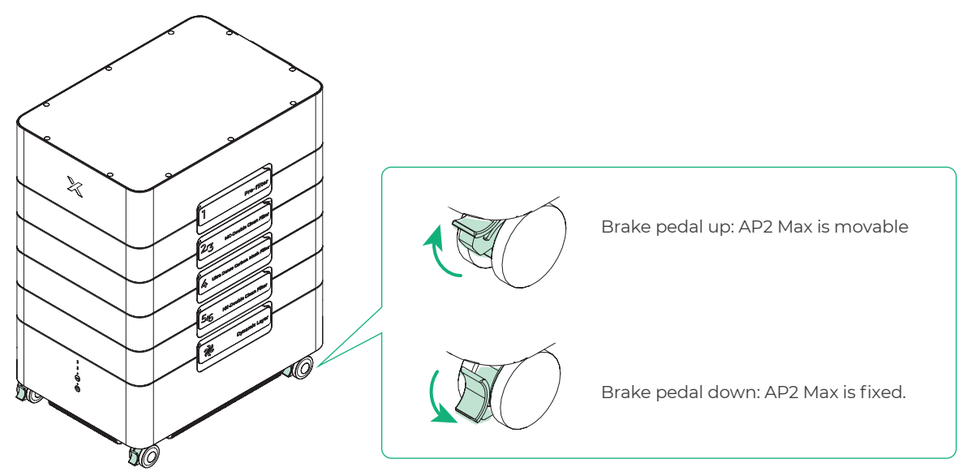

4 Connect the exhaust pipe of the laser machine

(1) Use the exhaust pipe connector to connect the air inlet and the machine's exhaust pipe.

- Scenario 1

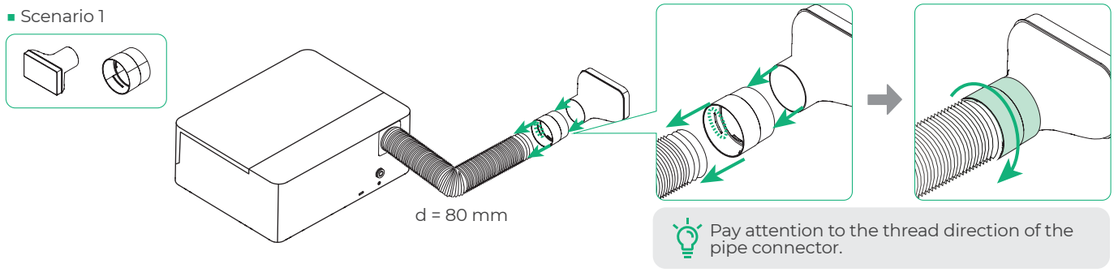

Pay attention to the thread direction of the pipe connector.

- Scenario 2

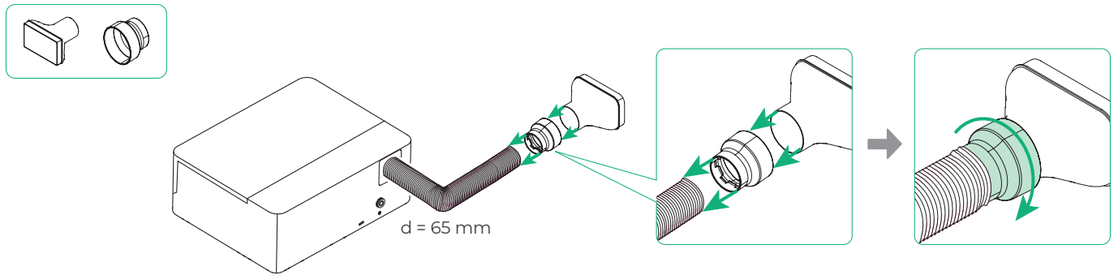

- Scenario 3

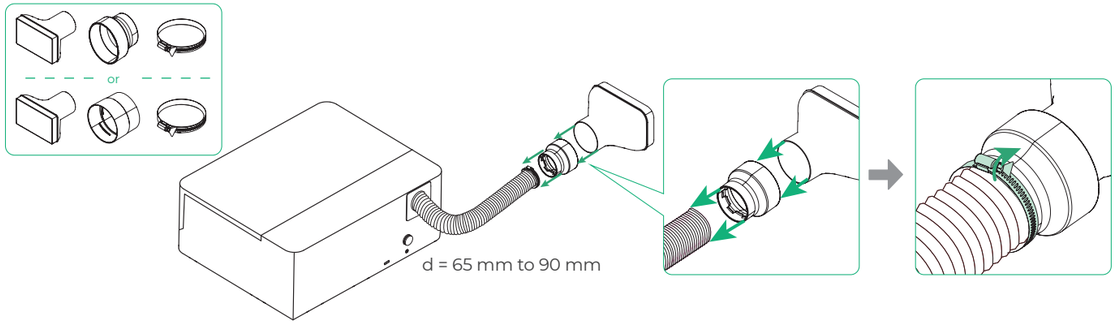

- Scenario 4

Obtain this item from the package of xTool MetalFab CNC Cutter.

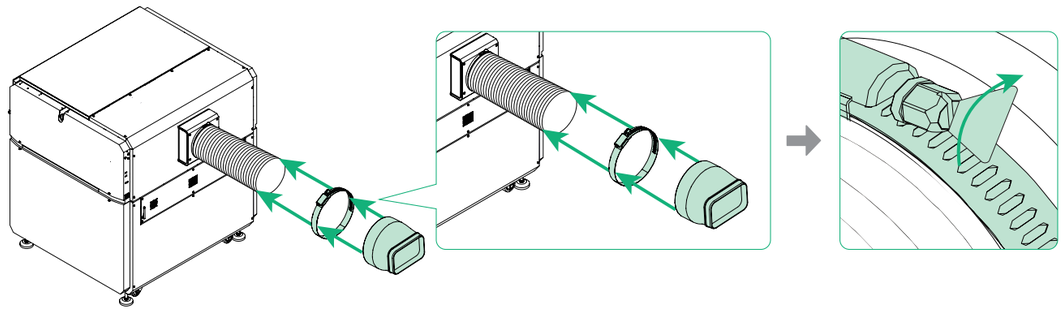

(2) Connect the machine exhaust pipe to the air inlet of AP2 Max.

- Scenario 1

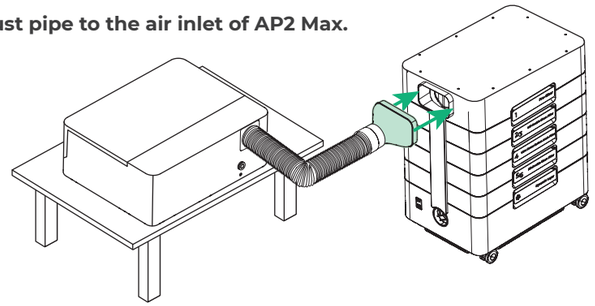

- Scenario 2

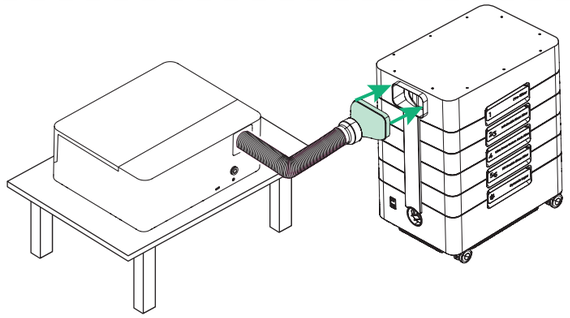

- Scenario 3

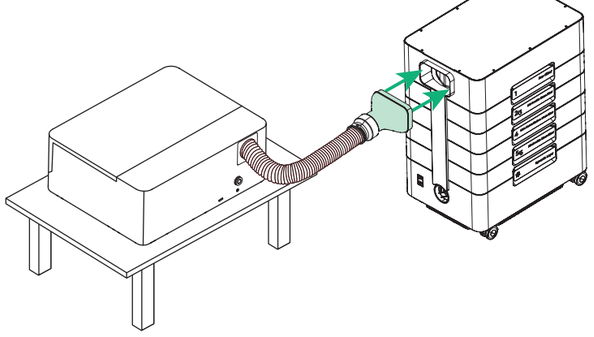

- Scenario 4

Obtain this item from the package of xTool MetalFab CNC Cutter.

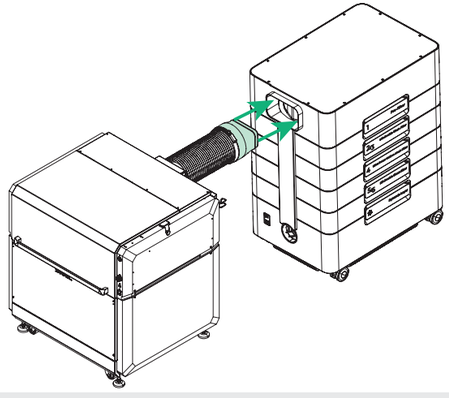

Subsequent steps: The operating steps are the same for different accessory combinations. This manual uses exhaust pipe connector 1 as an example.

5 Connect the exhaust pipe of AP2 Max

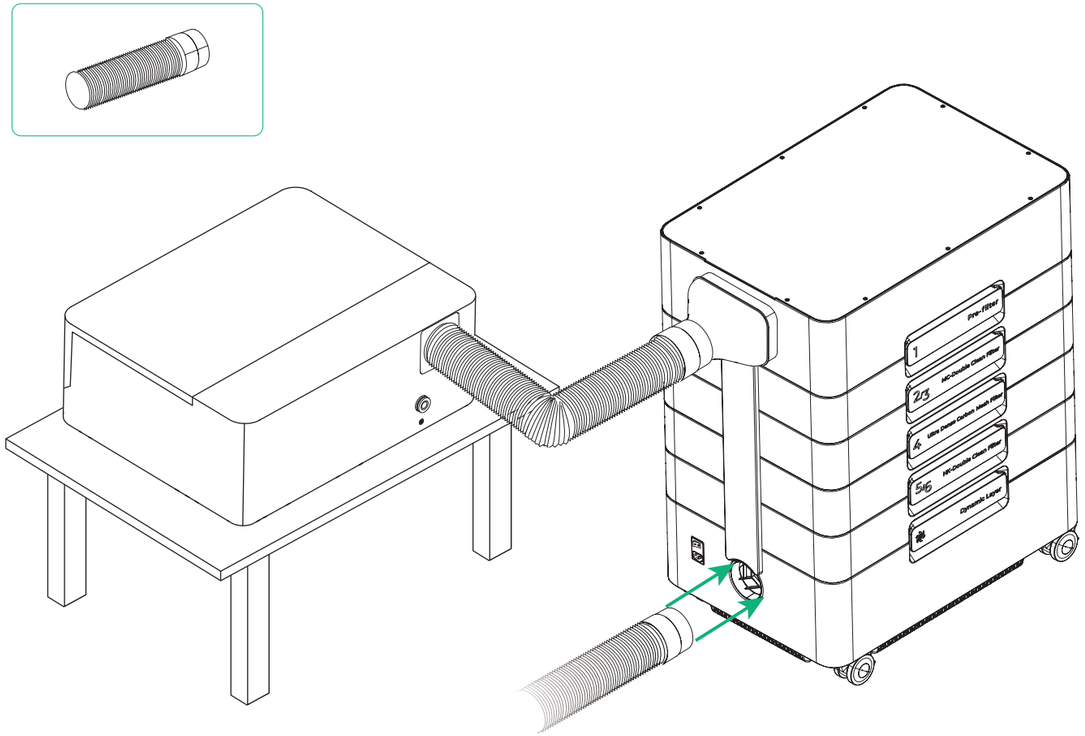

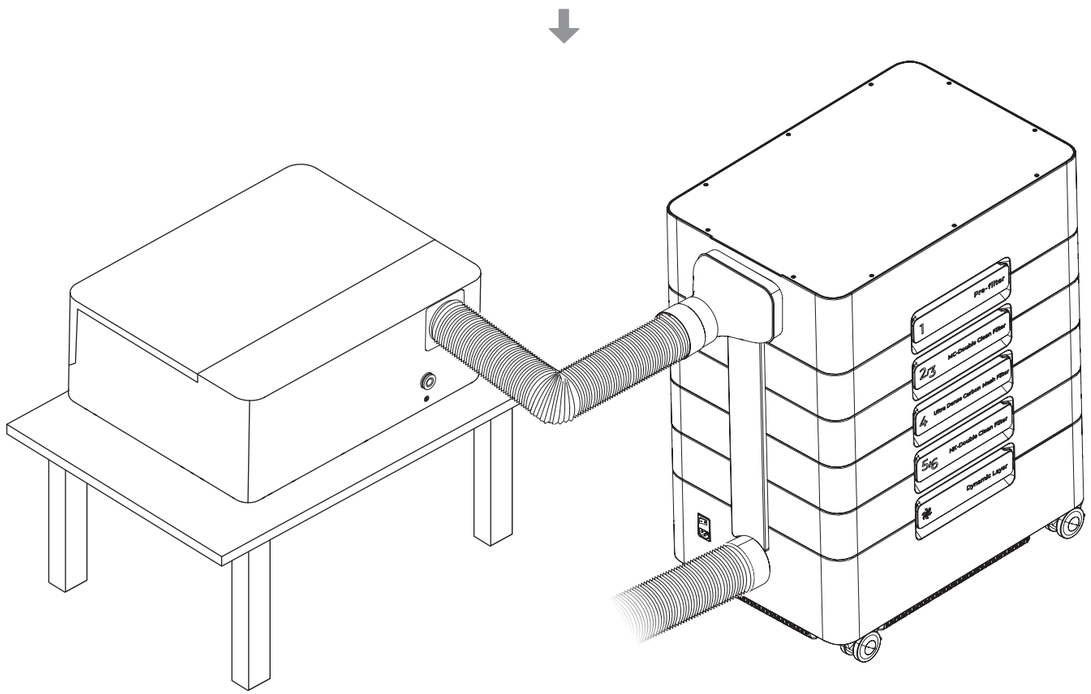

6 Connect AP2 Max to the power supply

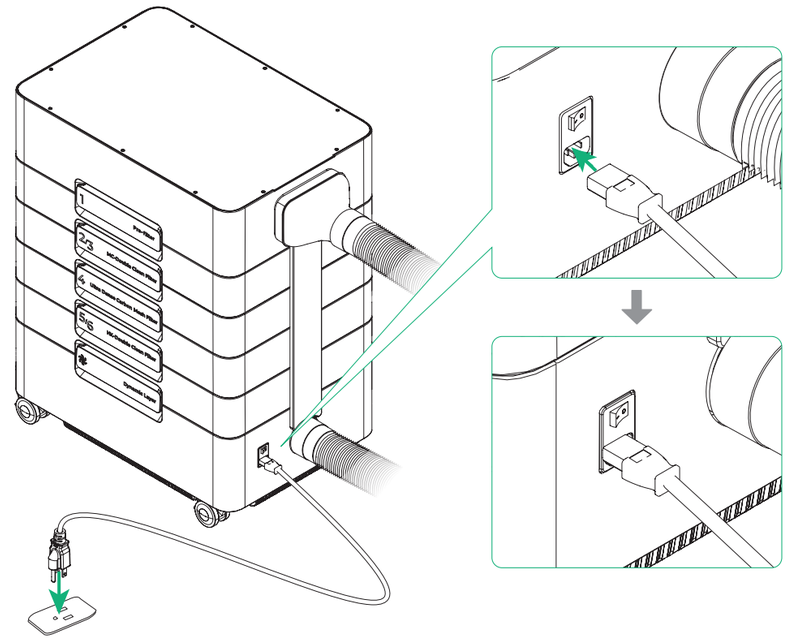

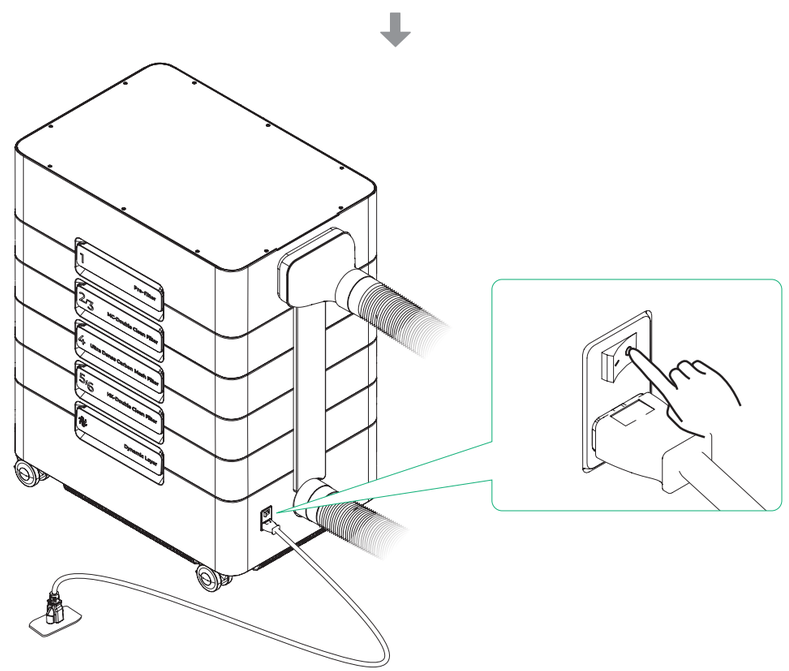

7 Set up wireless connection

AP2 Max can establish a wireless connection only with xTool laser machines that support Bluetooth.

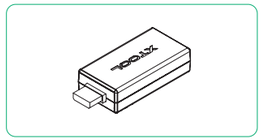

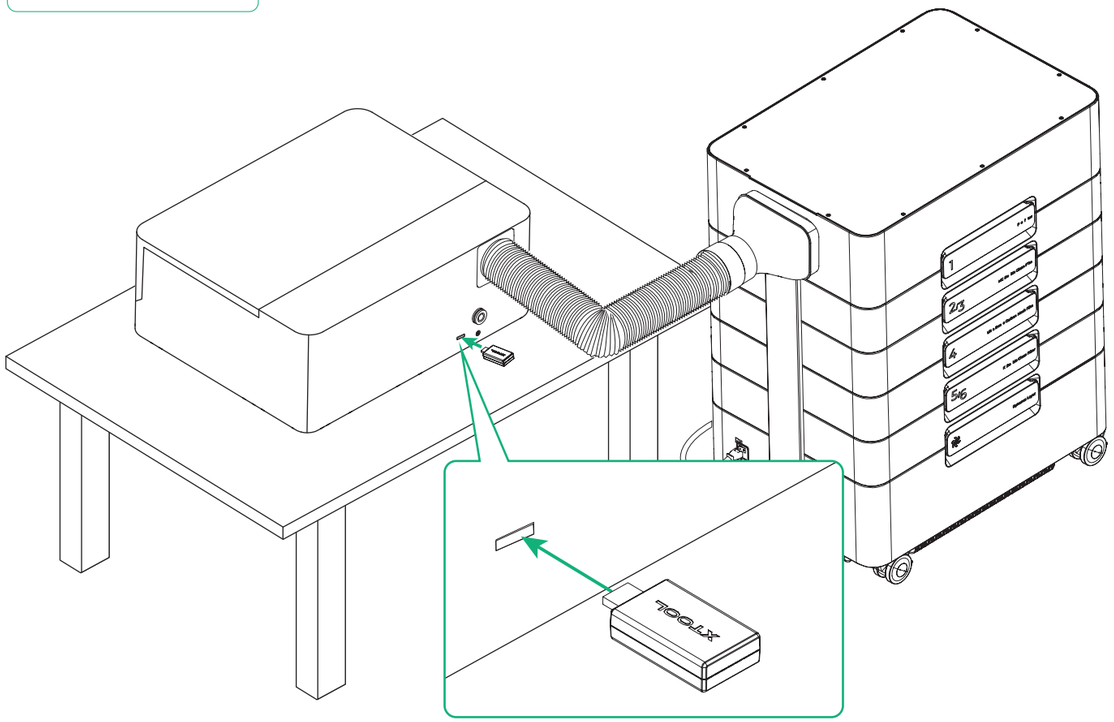

- Insert the Bluetooth dongle to the extension port of the xTool machine. The preceding figure is for reference only.
- After the Bluetooth dongle is connected, AP2 Max automatically establishes a connection with the xTool machine, and its information is displayed on the machine's device settings page on the xTool software. For more details, see "Use with xTool software."
- If another Bluetooth dongle has been inserted to the machine or you need to pair again, press and hold the AP2 Max's power button for at least five seconds. The Bluetooth status indicator will blink white, indicating that AP2 Max is in pairing mode.

Use xTool SafetyPro™ AP2 Max

1 Turn on the remote control.

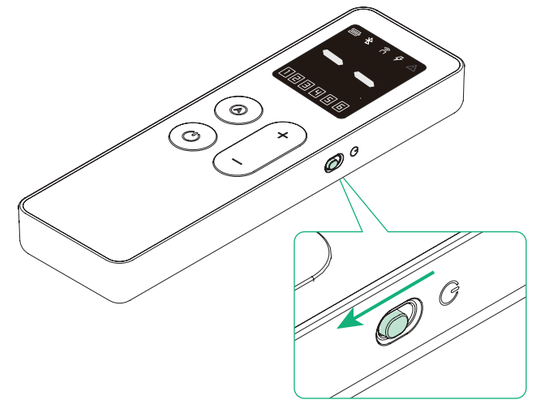

2 Turn on AP2 Max.

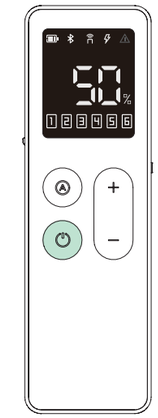

3 Select a mode.

Auto mode

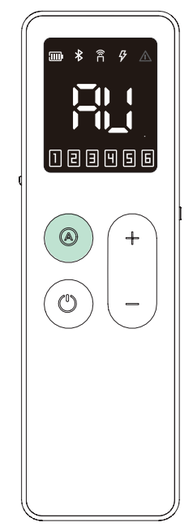

This mode is applicable only to xTool laser machines with Bluetooth functionality. In this mode, AP2 Max automatically adjusts the airflow volume based on the material being processed.

Manual mode

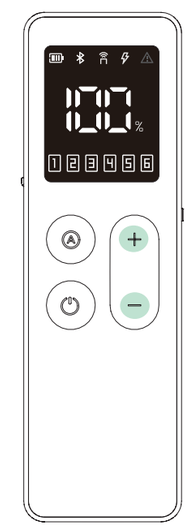

Press the airflow increase button or airflow decrease button to manually adjust the airflow.

- Each press increases the airflow by 1%. Pressing and holding for at least 1 second can increase continuously.
- Each press reduces the airflow by 1%. Pressing and holding for at least 1 second can reduce continuously.

Use with xTool software

Get xTool software

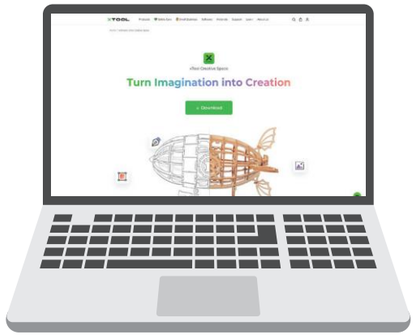

Visit **s.xtool.com/software** to get xTool software.

Visit **support.xtool.com/article/2097** or scan the QR code for details about how to use xTool software to process materials.

Maintenance

Replace the filters

When a filter is reaching its end of life, the xTool software prompts you to purchase a new one for replacement. For steps about how to replace a filter, see “Install the filters.”

You must disconnect the power cable before replacing any filter.

Clean the cyclone

Generally, you need to clean the cyclone every 3 to 6 months.

You must disconnect the power cable before cleaning the cyclone.

(1) Take the cyclone down

1. Disconnect power.
2. Remove the exhaust pipe.

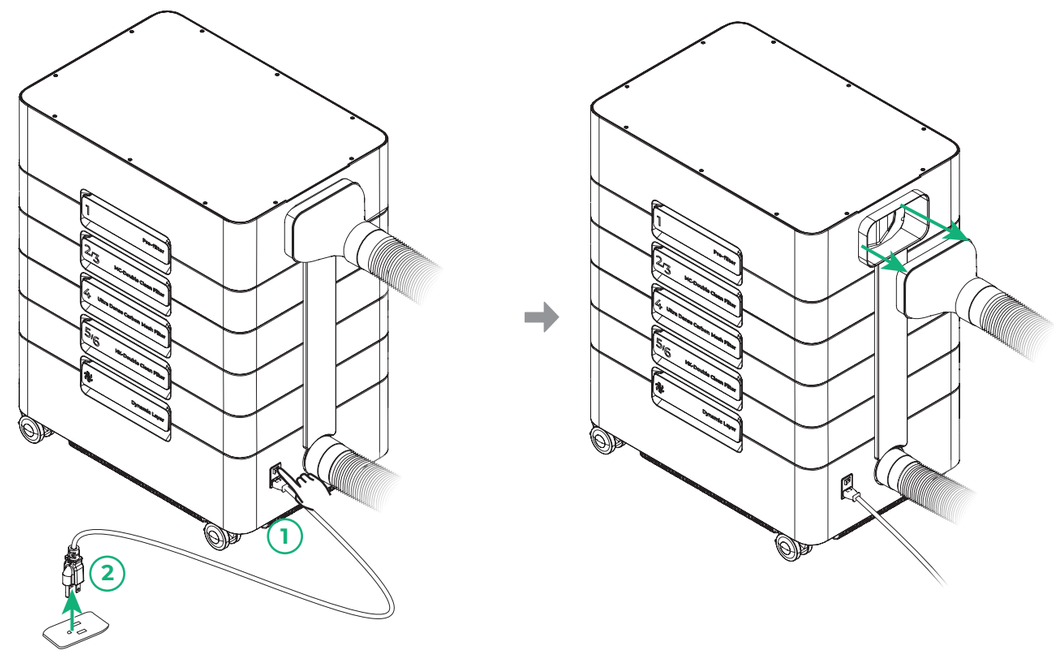

3. Remove the NFC baseplate.

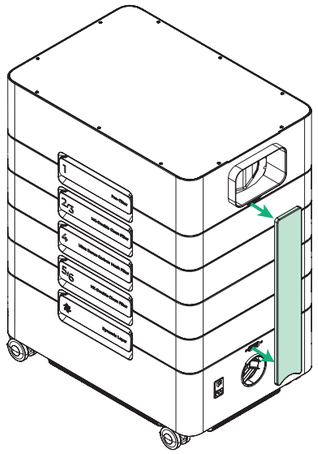

4. Release draw latches on both sides to unlock them.

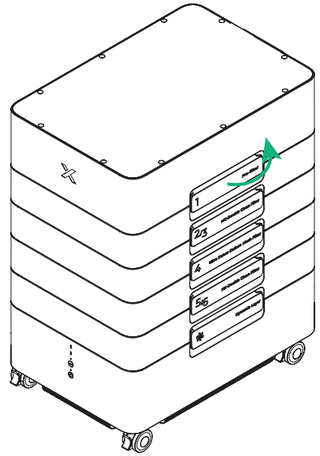

5. Take the cyclone down.

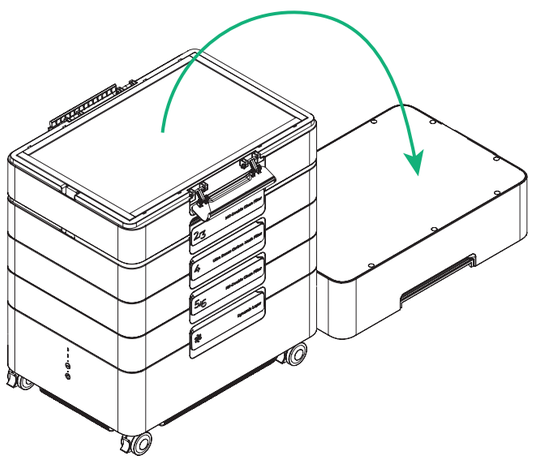

(2) Disassemble the cyclone

1. Remove the screws.

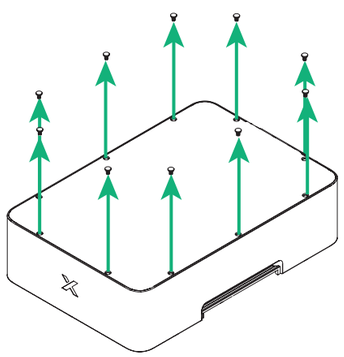

2. Take the cyclone components out.

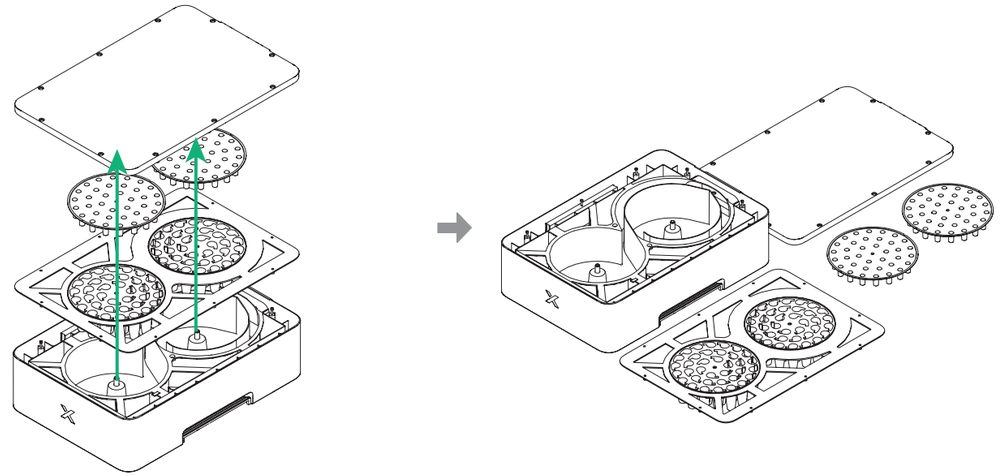

(3) Clean the cyclone

1. Pour out accumulated dust and debris.

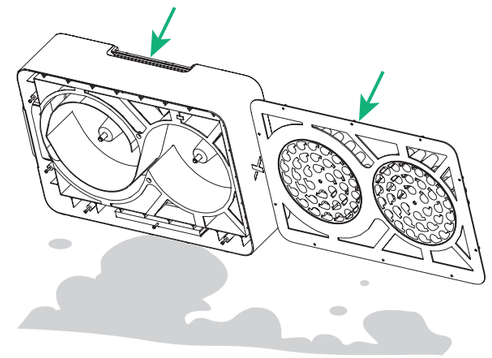

2. Spray with degreaser.

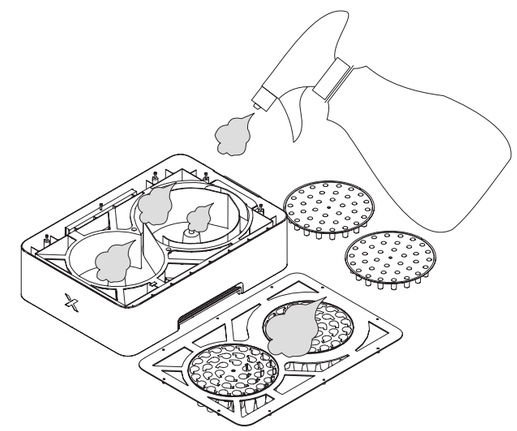

3. Wash with running water.

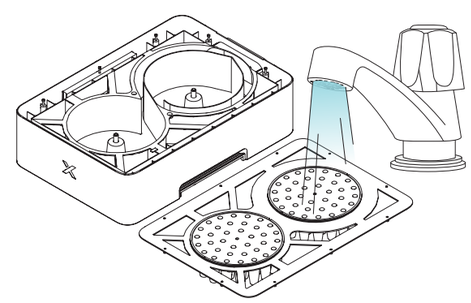

(4) Install the cyclone back

When the cyclone components are dry, install them back in place.

1. Reinstall the components in the order as illustrated.

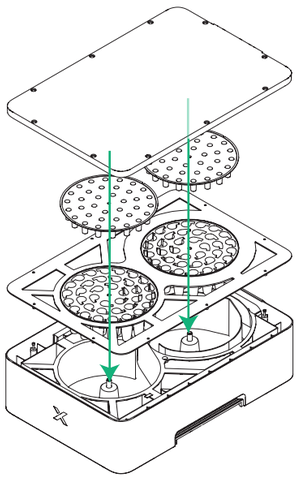

2. Install the screws.

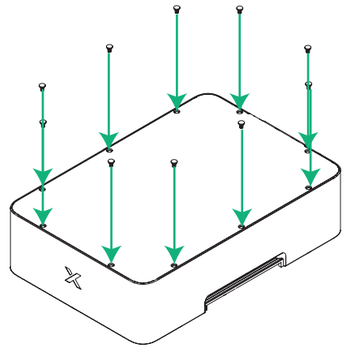

3. Reinstall the cyclone and lock the draw latches.

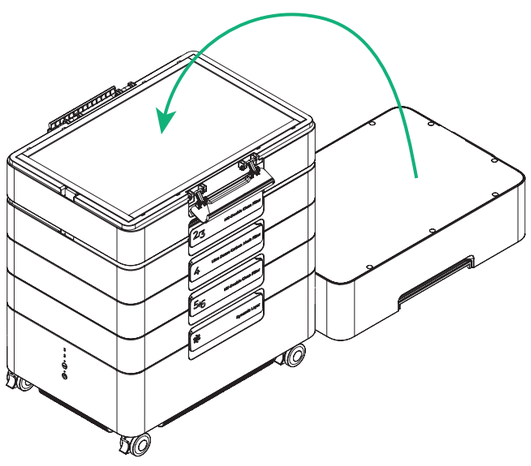

4. Reinstall the NFC baseplate.

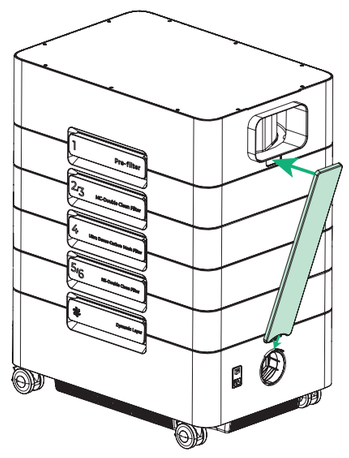

FCC Warning

This device complies with part 15 of the FCC Rules. Operation is subject to the following two conditions:
(1) This device may not cause harmful interference, and (2) this device must accept any interference received, including interference that may cause undesired operation.
Any Changes or modifications not expressly approved by the party responsible for compliance could void the user's authority to operate the equipment.
Note: This equipment has been tested and found to comply with the limits for a Class B digital device,
pursuant to part 15 of the FCC Rules. These limits are designed to provide reasonable protection
against harmful interference in a residential installation. This equipment generates uses and can radiate radio frequency energy and, if not installed and used in accordance with the instructions, may cause
harmful interference to radio communications. However, there is no guarantee that interference will not occur in a particular installation. If this equipment does cause harmful interference to radio or television reception, which can be determined by turning the equipment off and on, the user is encouraged to try to correct the interference by one or more of the following measures:
-Reorient or relocate the receiving antenna.
-Increase the separation between the equipment and receiver.
-Connect the equipment into an outlet on a circuit different from that to which the receiver is connected.
-Consult the dealer or an experienced radio/TV technician for help.

The device has been evaluated to meet general RF exposure requirement. The device can be used in portable exposure condition without restriction.

The SAR limit of USA (FCC) is 1.6 W/kg averaged over one gram of tissue. Device types: (RC01) (FCC ID:2AH9Q-RC01) has also been tested against this SAR limit. The highest SAR value reported under this standard during product certification when properly worn on the body is 0.362W/kg.

ISED Warning

This device complies with Innovation, Science and Economic Development Canada ’ s licence-exempt RSS standard(s). Operation is subject to the following two conditions:
(1) This device may not cause interference; and
(2) This device must accept any interference, including interference that may cause undesired operation of the device.
Cet appareil est conforme aux normes RSS d'Innovation, Sciences et Développement économique Canada en matière d'exemption de licence. Son fonctionnement est soumis aux deux conditions suivantes:
(1) Cet appareil ne doit pas provoquer d'interférences; et
(2) Cet appareil doit accepter toute interférence, y compris celles qui peuvent entra↑ner un fonctionnement indésirable de l'appareil.
This Class B digital apparatus complies with Canadian ICES-003.
Cet appareil numérique de la classe B est conforme à la norme NMB-003 du Canada.

The device has been evaluated to meet general RF exposure requirement.
The device can be used in portable exposure condition without restriction.

L'appareil a été évalué pour répondre aux exigences générales d'exposition aux RF. L'appareil peut être utilisé sans restriction dans des conditions d'exposition portables.

This equipment complies with ISED radiation exposure limits set forth for an uncontrolled environment.

This equipment could be installed and operated with minimum distance 5mm between the radiator and your body. The highest SAR value reported under this standard during product certification for body is 0.362W/kg.

This equipment could be installed and operated with minimum distance 0mm between the radiator and limbs. The highest SAR value reported under this standard during product certification for extremlty(hand) is 0.560W/kg.

End user must follow the specific operating instructions for satisfying RF exposure compliance. This transmitter must not be co-located or operating in conjunction with any other antenna or transmitter.