TEST REPORT

Report Number.....:	90017-23-72-23-PP001	
Date of issue.....:	2023-1-9	
Tested by (+signature)..... :	Duke Chen	Duke Chen
Approved by (+signature)..... :	Jason Gao	Jason gao
Testing Laboratory name..... :	SLG-CPC Testlaboratory Co., Ltd.	
Address.....:	No. 11, Wu Song Road, Dongcheng District, Dongguan, Guangdong Province, China 523117	
Applicant's name.....:	DONGGUAN ARUN INDUSTRIAL CO.,LTD	
Address.....:	NO.13, Xinfeng Street, Changlong,Huangjiang Town, Dongguan City, Guangdong Province, P.R.China	
Manufacturer's name ..... :	DONGGUAN ARUN INDUSTRIAL CO.,LTD	
Address.....:	NO.13, Xinfeng Street, Changlong,Huangjiang Town, Dongguan City, Guangdong Province, P.R.China	
Factory's name ..... :	DONGGUAN ARUN INDUSTRIAL CO.,LTD	
Address.....:	NO.13, Xinfeng Street, Changlong,Huangjiang Town, Dongguan City, Guangdong Province, P.R.China	
Standard(s)..... :	FCC Rules and Regulations Part 15 Subpart C, Section 209	
Test item description.....:	Power Station	
Trade Mark..... :	ARUN	
Model/Type reference.....:	STORM 500B 01US, STORM 500B XXYY ("YY" and "XX" are variable)	
FCC ID..... :	2AHCL-STORM500	
Date of receipt of test item..... :	2022-11-29	
Date (s) of performance of test:	2022-11-29 - 2022-12-29	
Summary of Test Results.....:	**Pass**	

The Summary of Test Results based on a technical opinion belongs to the standard(s).

General disclaimer:

This report shall not be reproduced except in full, without the written approval of SLG-CPC Testlaboratory Co., Ltd. The test results in the report only apply to the tested sample.

Address:No.11,WuSongRoad,
DongchengDistrict,Dongguan,
GuangdongProvince,China523117

Tel: 86-769-22607797
Fax: 86-769-22607907
http://www.cpcteam.com

TABLE OF CONTENT

TABLE OF CONTENT 2
1. SUMMARY OF TEST RESULTS 3
2. GENERAL INFORMATION 4
2.1. Description of Device (EUT) 4
2.2. Independent Operation Modes 5
2.3. Description of Test Facility 5
2.4. Description of Support Device 6
2.5. Measurement Uncertainty 6
3. MEASURING DEVICE AND TEST EQUIPMENT 7
3.1. MEASUREMENT EQUIPMENT USED 7
4. 20DB BANDWIDTH 7
4.1. Test Procedure 8
4.2. Test Results 8
5. POWER LINE CONDUCTED EMISSION MEASUREMENT 9
5.1. Block Diagram of Test Setup 9
5.2. Limits 9
5.3. Test Procedure 9
5.4. Measuring Results 10
6. RADIATED EMISSION TEST 13
6.1. Measurement Procedure 13
6.2. Test SET-UP (Block Diagram of Configuration) 13
6.3. Radiated Emission Limit 14
6.4. Measurement Result 15

1. SUMMARY OF TEST RESULTS

EMISSION		
Description of Test Item	Standard & Limits	Results
Conducted Emission	FCC Part 15, Subpart C- Section 15.207 ANSI C63.10-2013	Pass
Radiated Emission	FCC Part 15, Subpart C- Section 15.209 ANSI C63.10-2013	Pass
20dB Bandwidth	FCC Part 15, Subpart C- Section 15.215 ANSI C63.10-2013	Pass
Note: N/A is an abbreviation for Not Applicable.		

2. GENERAL INFORMATION

2.1. Description of Device (EUT)

Product Name	Power Station
Trade Name	ARUN
Model Name	STORM 500B 01US, STORM 500B XXYY
Model Differences	STORM 500B 01US, STORM 500B XXYY(”YY” = blank or stands for the alphabet from A to Z, ”XX” blank or stands for the Arabic numerals, which are the abbreviation of different color, market, version, etc.) The schematic diagram and PCB of all models are identical, only the model name and appearance color are different.
Test Model	STORM 500B 01US
Operation frequency	110-205KHz
Modulation Type	FSK
Antenna Type	Inductive Loop antenna with 10 turns.
Wireless Charging	10W
Hardware version number	V1.0
Software version number	V1.0
Connecting I/O Port(s)	Please refer to the User's Manual

2.2. Independent Operation Modes

	Mode	TEST MODE DESCRIPPTION
	1.	Stand-by mode
	2.	Charging
	3	Wireless Charging
Note: 1. All test modes were pre - tested, but we only recorded the worst case in this report.		

2.3. Description of Test Facility

Site Description
FCC recognition of accreditation for SLG-CPC Test laboratory Co., Ltd.
Designation Number: CN1287
Test Firm Registration:394054

2.4. Description of Support Device

No.	Equipment	Trade name	Model	S/N	Input/ Output
1.	ADAPTER	/	GM152-2400400-D	/	Input:100-240~ 50/60Hz 2.5A Output: 24V4A
2.	Xiaomi	/	Mi11	6F7DFA8A	50W MAX.
3.					
4.					

2.5. Measurement Uncertainty

Test Item		Uncertainty
Occupied Channel Bandwidth	:	±2.3%
Conducted Emission Uncertainty	:	3.08dB
Radiated Emission Uncertainty (3m Chamber)	:	3.60dB (30M~1GHz) 4.48dB (1~6GHz)

3. MEASURING DEVICE AND TEST EQUIPMENT

3.1. MEASUREMENT EQUIPMENT USED

Equipment	Manufacturer	Model	S/N	Cal. Due
RF Connected Test				
Vector Signal Generater	Rohde & Schwarz	SMBV100B(6G)	101166	2023/06/29
Analog Signal Generator	Rohde & Schwarz	SMB100A(40G)	181333	2023/06/29
Signal Analyzer	Rohde & Schwarz	FSV40	101527	2023/04/19
Power Analyzer	Rohde & Schwarz	OSP-B157W8	N/A	2023/06/29
Wideband Radio Communication Tester	R&S	CMW270	101985	2023/07/05
Temperature&Humidity test chamber	ESPEC	VC 4018	/	2023/03/23
Wideband Radio Communication Tester	Rohde & Schwarz	CMW500	166898	2023/07/14
Spectrum	Agilent	N9020A	MY48011676	2023/02/22
control unit	Tonscend	JS0806-2	10165	2023/02/22
Testing software	Tonscend	JSTS1120-3	10165	2023/02/22
Radiated Emission Test				
EMI Test Receiver	KEYSIGHT	N9010A	MY56070465	2023/12/7
EMI Test Receiver	Rohde & Schwarz	FSV40	101511	2023/04/19
Bilog Antenna	Schwarzbeck	VULB 9163	01335	2023/04/28
Power Amplifier	EMEC	EM330	060676	2023/12/7
Cable	Tuyue	F4309	L-400-NmNm-120 00	2023/12/7
Signal Analyzer	Rohde & Schwarz	FSV40	101511	2023/04/19
Horn Antenna	Schwarzbeck	BBHA9170	00954	2025/09/13
Power Amplifier	Rohde & Schwarz	SCU-18F	180118	2025/04/21
Active Loop Antenna	ETS LINDGREN	6512	41623	2025/04/23
Test Software	Farad	EZ-EMC	Ver.CPC-3A1	/
Conducted Emission Test				
LISN	Schwarzbeck	NSLK 8127	8127-892	2023/03/19
EMI Test Receiver	R&S	ESR3	102124	2023/12/7
Pulse Limiter	R&S	ESH3-Z2	357.8810.52	2023/12/7
Test Software	Farad	EZ-EMC	Ver.CPC-3A1	/

4. 20DB BANDWIDTH

4.1. Test Procedure

Set to the maximum power setting and enable the EUT transmit continuously
a) The spectrum analyzer center frequency is set to the nominal EUT channel center frequency. The span range for the EMI receiver or spectrum analyzer shall be between two times and five times the OBW.
b) The nominal IF filter bandwidth (3 dB RBW) shall be in the range of 1% to 5% of the OBW and video bandwidth (VBW) shall be approximately three times RBW.
c) Set the reference level of the instrument as required, keeping the signal from exceeding the maximum input mixer level for linear operation.
d) The dynamic range of the instrument at the selected RBW shall be more than 10 dB below the target "−xx dB down" requirement
e) Set detection mode to peak and trace mode to max hold.
f) Determine the "−xx dB down amplitude" using [(reference value) − xx]. Alternatively, this calculation may be made by using the marker-delta function of the instrument.
Measure and record the results in the test report.

4.2. Test Results

Note: Because the measured signal is CW-like, adjusting the RBW per C63.10 would not be practical since measurement bandwidth will always follow the RBW. The RBW is set to 300 Hz to perform the occupied bandwidth test.

Temperature:	24℃	Test Date:	Dec. 28, 2022
Humidity:	53 %	Test By:	Ken

Frequency	20 dB occupied bandwidth	99% occupied bandwidth
kHz	Hz	Hz
149	1.005	747

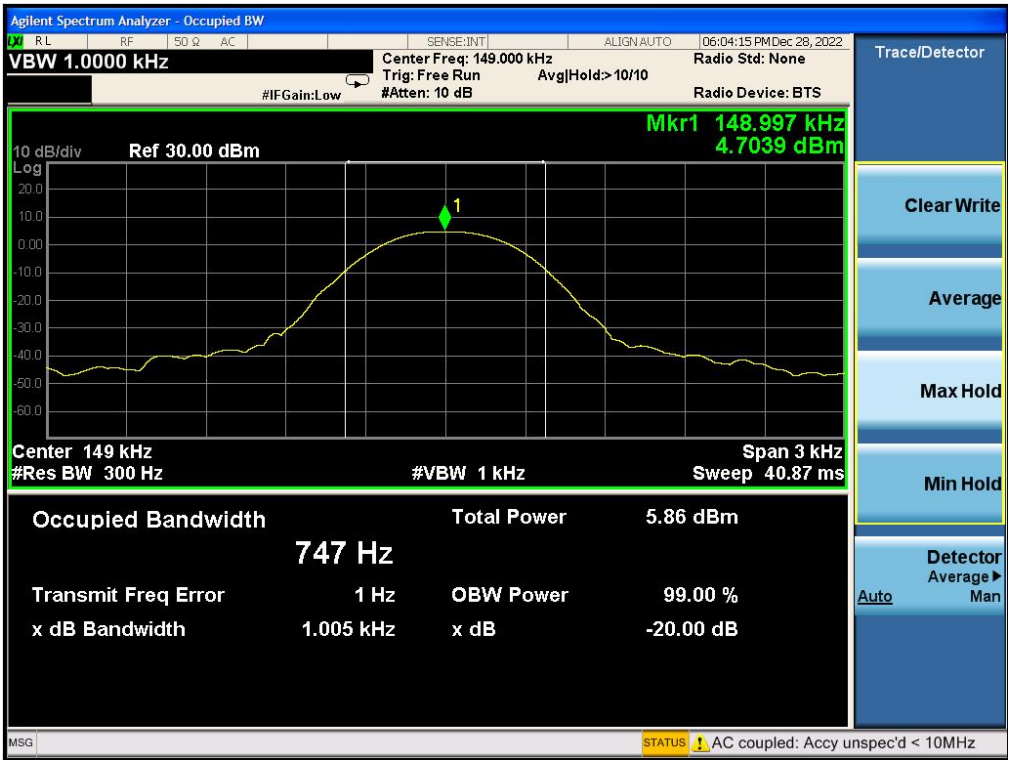

5. POWER LINE CONDUCTED EMISSION MEASUREMENT

5.1. Block Diagram of Test Setup

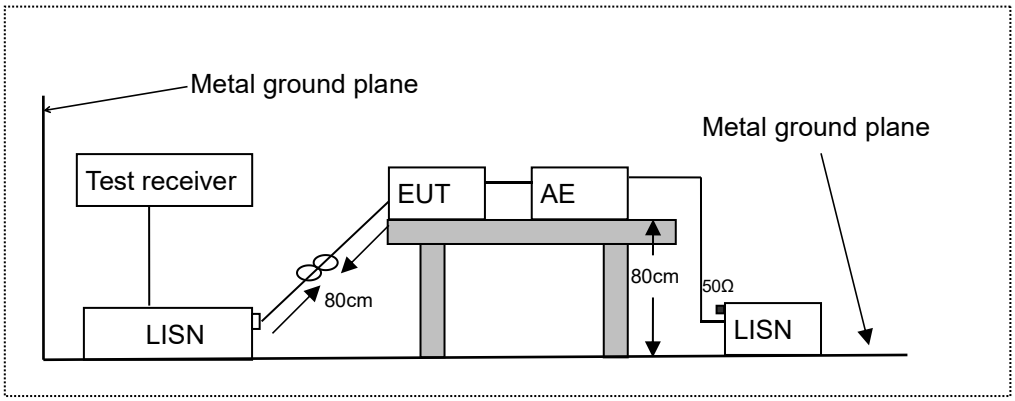

LISN: Line Impedance Stabilization Network
AE: Associated equipment
EUT: Equipment under test

5.2. Limits

FCC Part 15.207

Frequency (MHz)			Limit (dBμV)	
			Quasi-peak Level	Average Level
0.15	~	0.50	66.0 ~ 56.0 *	56.0 ~ 46.0 *
0.50	~	5.00	56.0	46.0
5.00	~	30.00	60.0	50.0
NOTE1-The lower limit shall apply at the transition frequencies. NOTE2-The limit decreases linearly with the logarithm of the frequency in the range 0.15MHz to 0.50MHz.				

5.3. Test Procedure

The EUT was placed on a desk 0.8 m height from the metal ground plane and 0.4 m from the conducting wall of the shielding room and it was kept at least 0.8 m from any other grounded conducting surface. The size of the table will nominally be 1.5 m x1.0 m.

The rear of the arrangement shall be flush with the back of the supporting tabletop unless that would not be possible or typical of normal use.

All units of equipment forming the system under test (includes the EUT as well as connected peripherals and associated equipment or devices) shall be arranged such that a nominal 0.1 m separation is achieved between the neighboring units.

Connect EUT to the power mains through a line impedance stabilization network (LISN). Where the mains cable supplied by the manufacturer is longer than 1 m, the excess should be folded at the centre into a bundle no longer than 0.4 m, so that its length is shortened to 1 m.

All the support units are connecting to the other LISN.

The LISN provides 50 ohm coupling impedance for the measuring instrument.

Both sides of AC line were checked for maximum conducted interference.

The frequency range from 150 kHz to 30 MHz was sweep.

Set the test-receiver system to quasi peak detect function and average detect function, and to measure the conducted emissions values.

Test results were obtained from the following equation:
Emission Level (dBμV) = LISN Factor (dB) + Cable Loss (dB) + Reading (dBμV)
Margin (dB) = Emission Level (dBμV) - Limit (dBμV)

5.4. Measuring Results

PASS.

M/N		:	STORM 500B 01US		
Test Mode		:	FSK		
Test Phase		:	Power Line; Live		
Test Voltage		:	AC 120V/60Hz		
Temperature (°C):	24.3	Relative Humidity (%):	51	Atmospheric Pressure(kPa) :	101.4

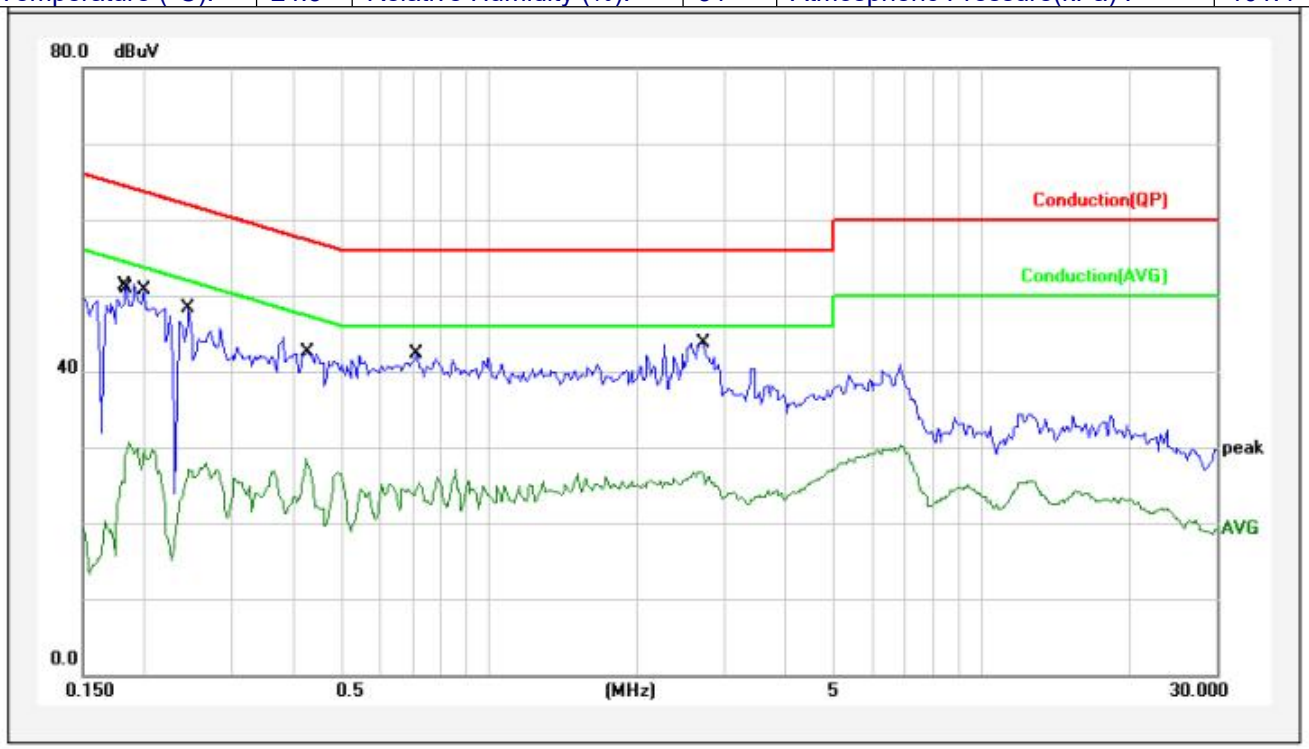

No.	Frequency (MHz)	Factor (dB)	Reading (dBuV)	Level (dBuV)	Limit (dBuV)	Margin (dB)	Detector	P/F	Remark
1	0.1830	10.43	37.97	48.40	64.35	-15.95	QP	P	
2	0.1860	10.43	20.34	30.77	54.21	-23.44	AVG	P	
3	0.1998	10.43	37.27	47.70	63.62	-15.92	QP	P	
4	0.1998	10.43	19.32	29.75	53.62	-23.87	AVG	P	
5	0.2457	10.44	34.86	45.30	61.90	-16.60	QP	P	
6	0.2457	10.44	16.59	27.03	51.90	-24.87	AVG	P	
7	0.4294	10.47	29.03	39.50	57.26	-17.76	QP	P	
8	0.4294	10.47	18.12	28.59	47.26	-18.67	AVG	P	
9	0.7150	10.51	28.89	39.40	56.00	-16.60	QP	P	
10	0.7150	10.51	14.85	25.36	46.00	-20.64	AVG	P	
11	2.7271	10.59	30.31	40.90	56.00	-15.10	QP	P	
12	2.7271	10.59	16.20	26.79	46.00	-19.21	AVG	P	

Note: Level=Reading+Factor.
Margin=Level-Limit.

M/N		:	STORM 500B 01US			
Test Mode		:	FSK			
Test Phase		:	Power Line; Neutral			
Test Voltage		:	AC 120V/60Hz			
Temperature (°C):	24.3	Relative Humidity (%):		51	Atmospheric Pressure(kPa) :	101.4

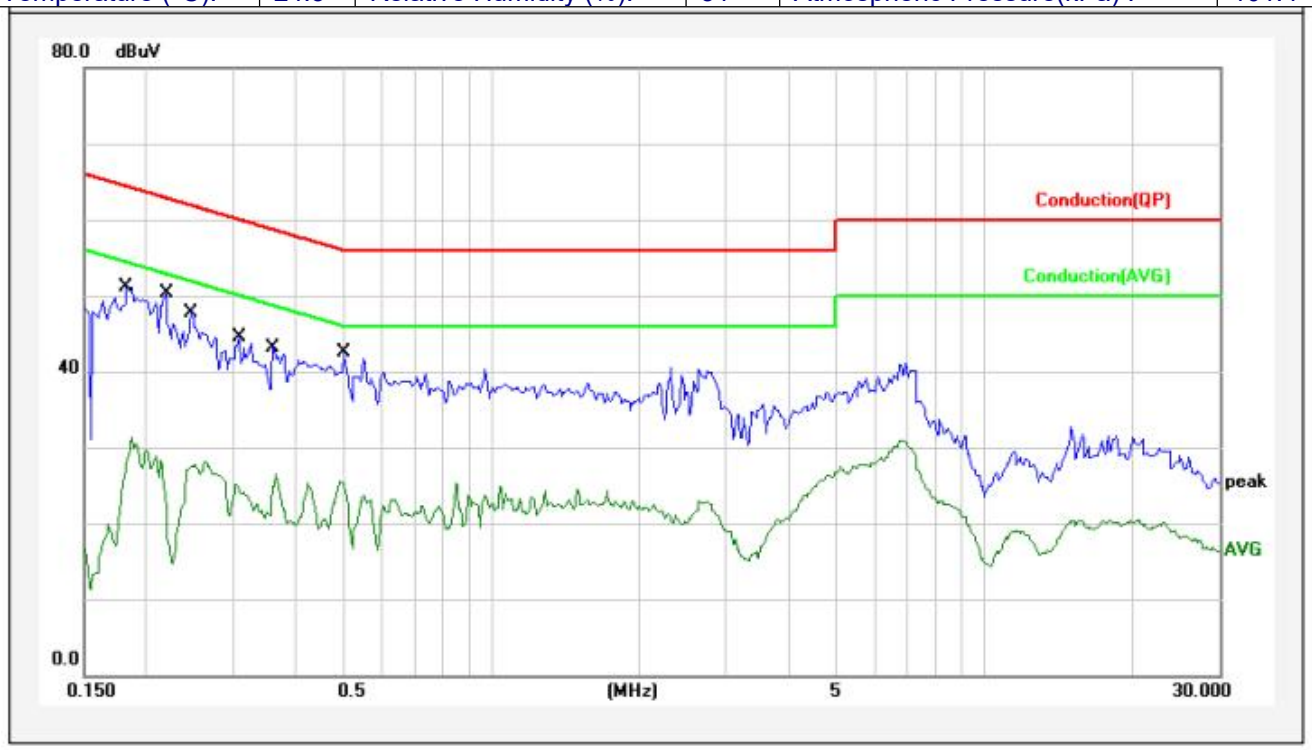

No.	Frequency (MHz)	Factor (dB)	Reading (dBuV)	Level (dBuV)	Limit (dBuV)	Margin (dB)	Detector	P/F	Remark
1	0.1830	10.43	37.67	48.10	64.35	-16.25	QP	P	
2	0.1830	10.43	20.87	31.30	54.35	-23.05	AVG	P	
3	0.2197	10.44	36.96	47.40	62.83	-15.43	QP	P	
4	0.2197	10.44	16.05	26.49	52.83	-26.34	AVG	P	
5	0.2477	10.44	34.26	44.70	61.83	-17.13	QP	P	
6	0.2477	10.44	17.25	27.69	51.83	-24.14	AVG	P	
7	0.3096	10.45	31.05	41.50	59.98	-18.48	QP	P	
8	0.3096	10.45	14.61	25.06	49.98	-24.92	AVG	P	
9	0.3632	10.46	29.84	40.30	58.65	-18.35	QP	P	
10	0.3632	10.46	16.09	26.55	48.65	-22.10	AVG	P	
11	0.5036	10.48	29.02	39.50	56.00	-16.50	QP	P	
12	0.5036	10.48	14.51	24.99	46.00	-21.01	AVG	P	

Note: Level=Reading+Factor.
Margin=Level-Limit.

6. RADIATED EMISSION TEST

6.1.Measurement Procedure

1. The EUT was placed on a turn table which is 0.8m above ground plane.
2. Maximum procedure was performed on the six highest emissions to ensure EUT compliance.
3. And also, each emission was to be maximized by changing the polarization of receiving antenna both horizontal and vertical.
4. Repeat above procedures until all frequency measured were complete.
5. Use the following receiver/spectrum analyzer settings:
   Span = wide enough to fully capture the emission being measured
   RBW=200Hz for 9KHz to 150KHz,
   RBW=9kHz for 150KHz to 30MHz,
   RBW=120KHz for 30MHz to 1GHz
   VBW ≥ 3*RBW
   Sweep = auto
   Detector function = QP
   Trace = max hold

6.2.Test SET-UP (Block Diagram of Configuration)

(A) Radiated Emission Test Set-Up, Frequency Below 30MHz

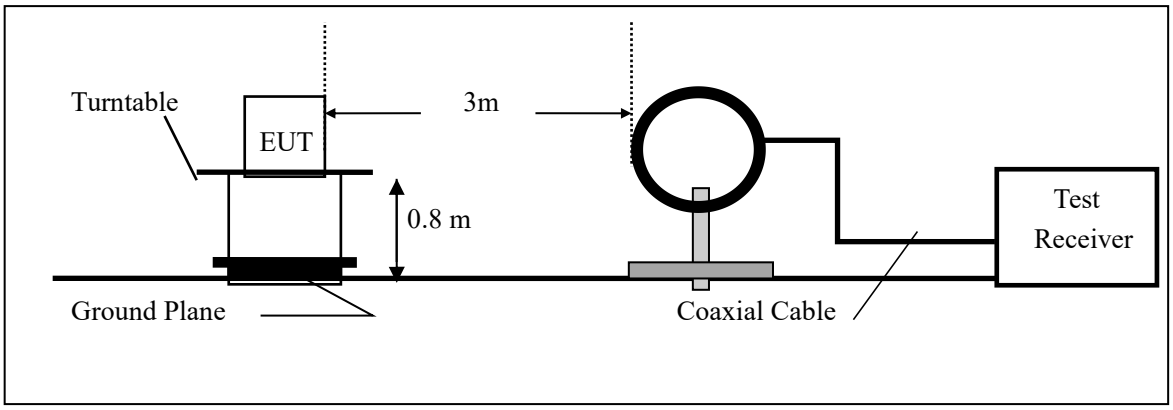

(B) Radiated Emission Test Set-Up, Frequency Below 1000MHz

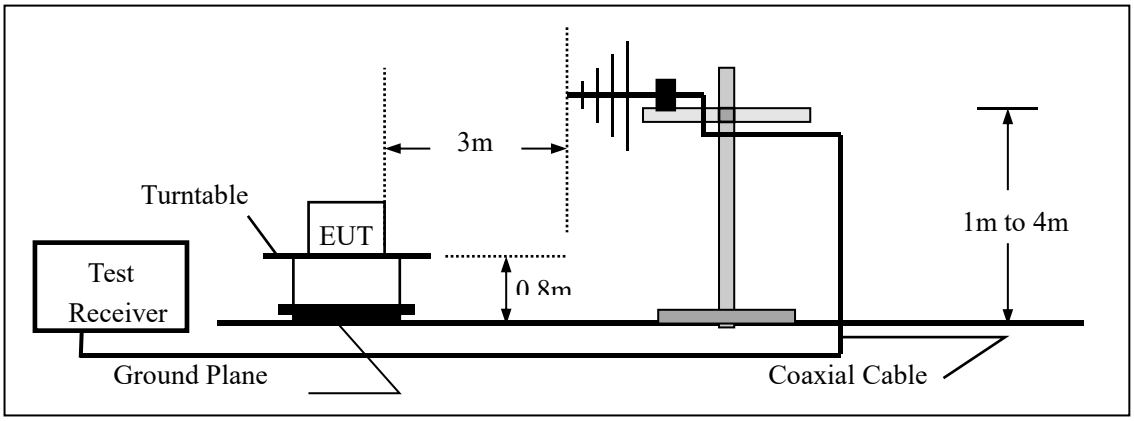

6.3.Radiated Emission Limit

The emissions from an intentional radiator shall not exceed the field strength levels specified in the following table 15.209(a):

FCC Part 15.209				
Frequency (MHz)	Field Strength Limitation		Field Strength Limitation Frequency tion at 3m Measurement Dist	
	(uV/m)	Dist	(uV/m)	(dBuV/m)
0.009 – 0.490	2400 / F(KHz)	300m	10000 * 2400/F(KHz)	20log 2400/F(KHz) + 80
0.490 – 1.705	24000 / F(KHz)	30m	100 * 24000/F(KHz)	20log 24000/F(KHz) + 40
1.705 – 30.00	30	30m	100* 30	20log 30 + 40
30.0 – 88.0	100	3m	100	20log 100
88.0 – 216.0	150	3m	150	20log 150
216.0 – 960.0	200	3m	200	20log 200
Above 960.0	500	3m	500	20log 500

15.205 Restricted bands of operation

MHz	MHz	MHz	GHz
0.090 - 0.110	16.42 - 16.423	399.9 - 410	4.5 - 5.15
[1]0.495 - 0.505	16.69475 - 16.69525	608 - 614	5.35 - 5.46
2.1735 - 2.1905	16.80425 - 16.80475	960 - 1240	7.25 - 7.75
4.125 - 4.128	25.5 - 25.67	1300 - 1427	8.025 - 8.5
4.17725 - 4.17775	37.5 - 38.25	1435 - 1626.5	9.0 - 9.2
4.20725 - 4.20775	73 - 74.6	1645.5 - 1646.5	9.3 - 9.5
6.215 - 6.218	74.8 - 75.2	1660 - 1710	10.6 - 12.7
6.26775 - 6.26825	108 - 121.94	1718.8 - 1722.2	13.25 - 13.4
6.31175 - 6.31225	123 - 138	2200 - 2300	14.47 - 14.5
8.291 - 8.294	149.9 - 150.05	2310 - 2390	15.35 - 16.2
8.362 - 8.366	156.52475 - 156.52525	2483.5 - 2500	17.7 - 21.4
8.37625 - 8.38675	156.7 - 156.9	2690 - 2900	22.01 - 23.12
8.41425 - 8.41475	162.0125 - 167.17	3260 - 3267	23.6 - 24.0
12.29 - 12.293	167.72 - 173.2	3332 - 3339	31.2 - 31.8
12.51975 - 12.52025	240 - 285	3345.8 - 3358	36.43 - 36.5
12.57675 - 12.57725	322 - 335.4	3600 - 4400	([2])

Remark: 1. Emission level in dBuV/m=20 log (uV/m)
2. Measurement was performed at an antenna to the closed point of EUT distance of meters.
3. Only spurious frequency is permitted to locate within the Restricted Bands specified in provision of ξ 15.205, and the emissions located in restricted bands also comply with 15.209 limit.

6.4.Measurement Result

9kHz-150kHz:

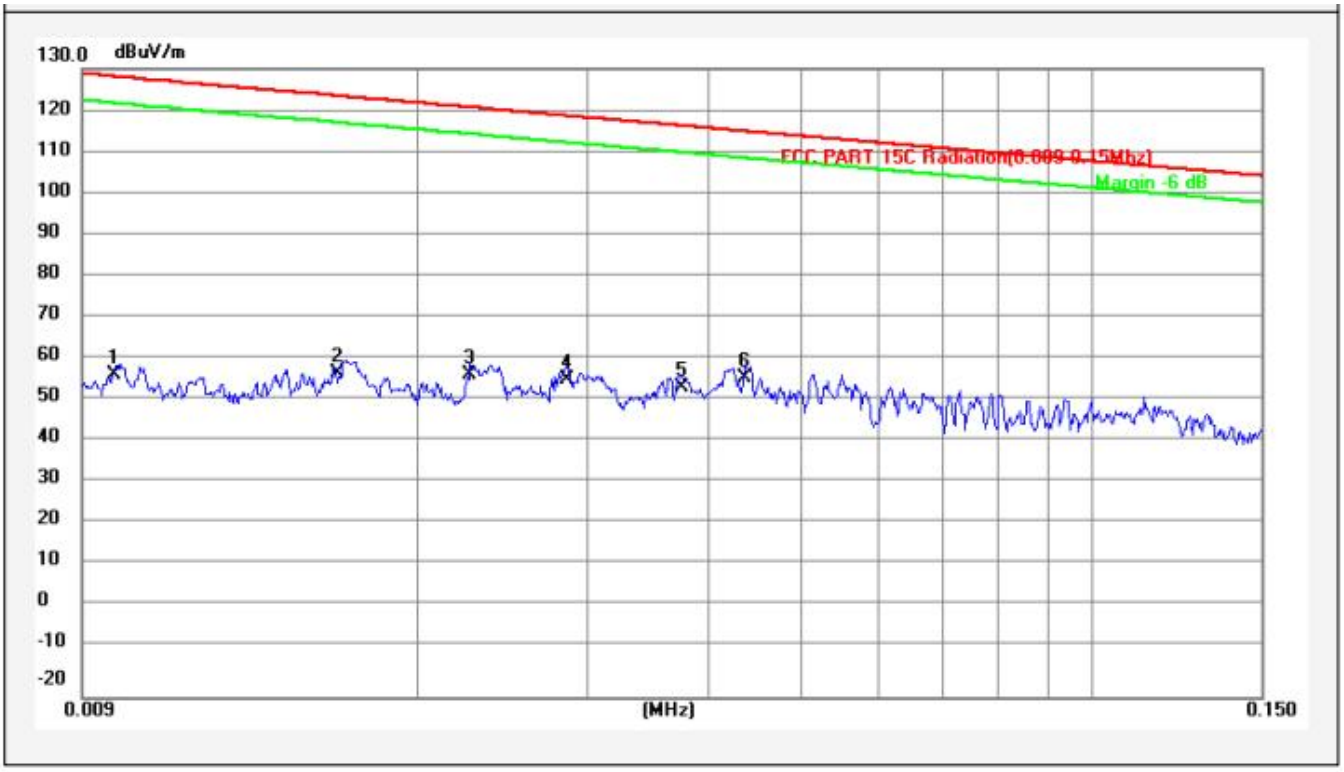

No.	Frequency (MHz)	Factor (dBuV/m)	Reading (dBuV)	Level (dBuV/m)	Limit (dBuV/m)	Margin (dB)	Detector	MK.	Remark
1	0.0097	10.32	46.58	56.90	127.66	-70.76	QP		
2	0.0165	11.33	46.05	57.40	123.09	-65.69	QP		
3	0.0227	11.35	45.55	56.90	120.34	-63.44	QP		
4	0.0286	11.41	44.39	55.80	118.35	-62.55	QP		
5	0.0376	11.51	42.69	54.20	115.99	-61.79	QP		
6	0.0437	11.53	44.77	56.30	114.70	-58.40	QP	*	

150kHz-30MHz:

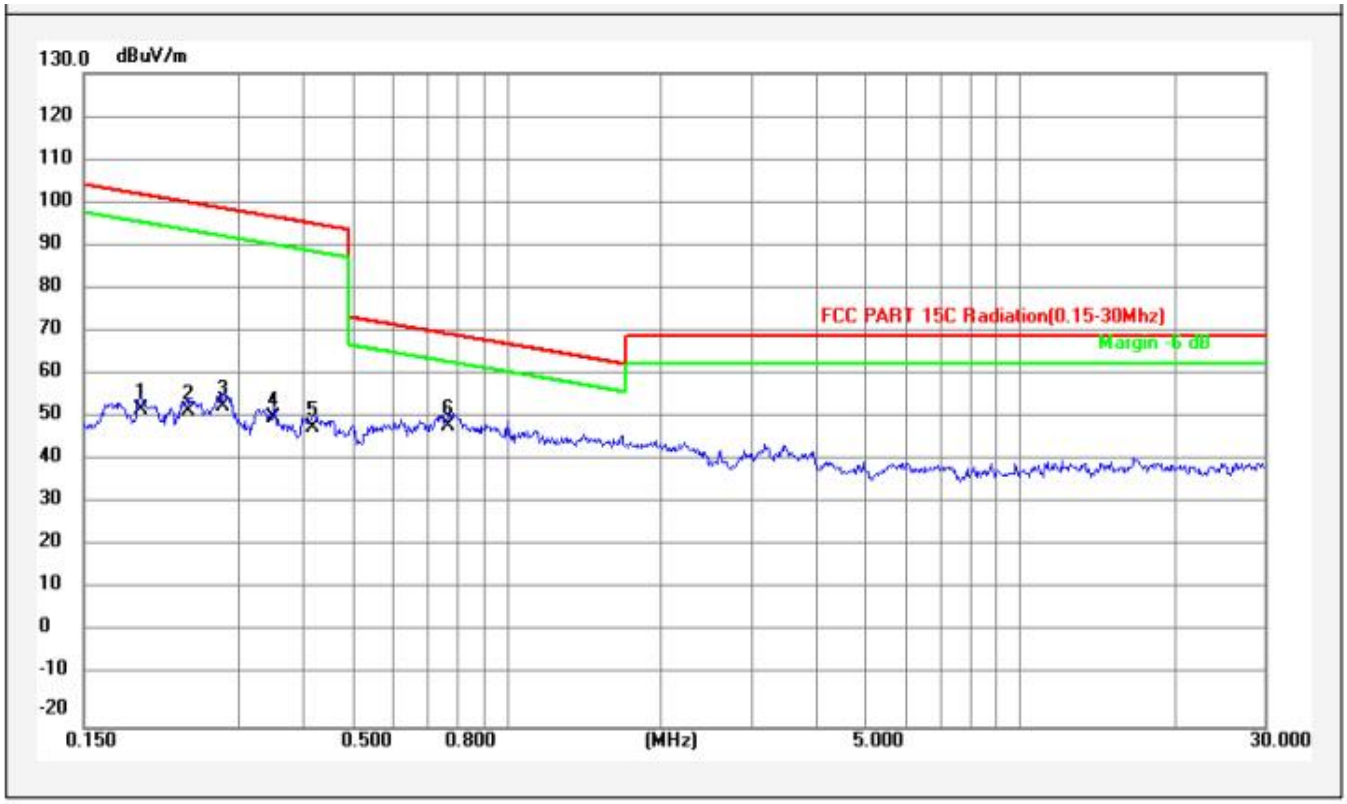

No.	Frequency (MHz)	Factor (dBuV/m)	Reading (dBuV)	Level (dBuV/m)	Limit (dBuV/m)	Margin (dB)	Detector	MK.	Remark
1	0.1943	11.85	41.05	52.90	101.83	-48.93	QP		
2	0.2391	12.21	40.39	52.60	100.03	-47.43	QP		
3	0.2802	12.15	41.55	53.70	98.65	-44.95	QP		
4	0.3518	12.05	38.85	50.90	96.68	-45.78	QP		
5	0.4192	12.11	36.79	48.90	95.16	-46.26	QP		
6	0.7710	12.14	37.16	49.30	69.86	-20.56	QP	*	

30MHz-1GHz:

M/N		:	STORM 500B 01US		
Test Mode		:	FSK		
Test Phase		:	Vertical		
Test Voltage		:	AC 120V/60Hz		
Temperature (°C):	23.7	Relative Humidity (%):	57	Atmospheric Pressure(kPa) :	98.3

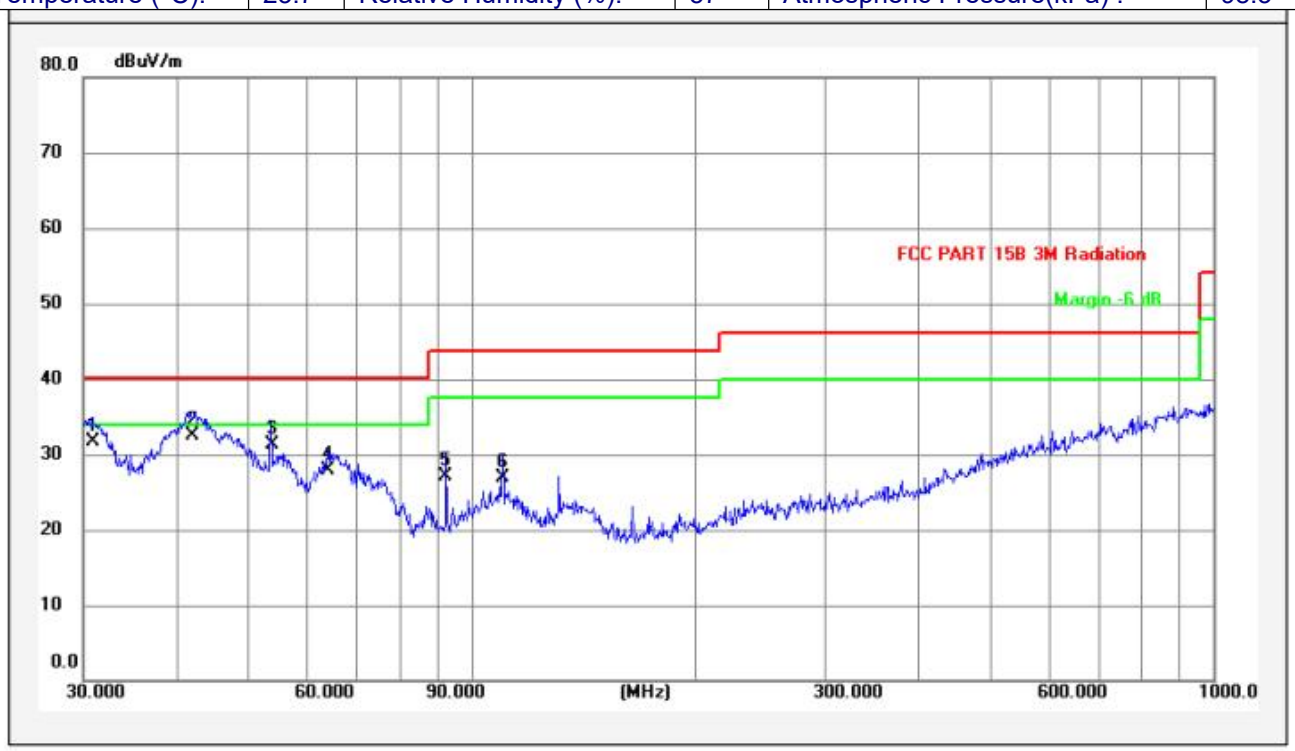

No.	Frequency (MHz)	Factor (dBuV/m)	Reading (dBuV)	Level (dBuV/m)	Limit (dBuV/m)	Margin (dB)	Detector	MK.	Remark
1	30.8535	11.49	20.31	31.80	40.00	-8.20	QP		
2	41.8596	12.38	20.22	32.60	40.00	-7.40	QP	*	
3	53.6932	13.21	18.09	31.30	40.00	-8.70	QP		
4	64.2074	11.37	16.53	27.90	40.00	-12.10	QP		
5	92.4624	11.85	15.35	27.20	43.50	-16.30	QP		
6	110.1816	12.28	14.72	27.00	43.50	-16.50	QP		

Note: Level=Reading+Factor.
Margin=Level-Limit.

M/N		:	STORM 500B 01US			
Test Mode		:	FSK			
Test Phase		:	Horizontal			
Test Voltage		:	AC 120V/60Hz			
Temperature (°C):	23.7	Relative Humidity (%):		57	Atmospheric Pressure(kPa) :	98.3

No.	Frequency (MHz)	Factor (dBuV/m)	Reading (dBuV)	Level (dBuV/m)	Limit (dBuV/m)	Margin (dB)	Detector	MK.	Remark
1	50.9417	13.36	8.24	21.60	40.00	-18.40	QP		
2	57.7961	12.98	9.62	22.60	40.00	-17.40	QP		
3	63.7588	11.52	12.98	24.50	40.00	-15.50	QP	*	
4	70.8315	9.25	14.25	23.50	40.00	-16.50	QP		
5	170.1947	9.68	10.12	19.80	43.50	-23.70	QP		
6	213.0150	11.62	10.28	21.90	43.50	-21.60	QP		

Note: Level=Reading+Factor.
Margin=Level-Limit.

----------The end----------