System Description & Installation Manual

iEBS Basic , Standard , Premium
Intelligent Electronic Braking System
Trailers

Copyright © ZF Friedrichshafen AG

This document is protected by copyright.

Complete or partial reproduction or distribution of this document is not permitted without the approval of ZF Friedrichshafen AG.

Infringements lead to civil and criminal prosecution.

The English version is the original document.

I Symbols used in this document

⚠ DANGER

The signal word DANGER indicates a dangerous situation that, if not prevented, will lead to a severe injury or death.

⇨ Information as to how the danger can be prevented.

⚠ WARNING

The signal word WARNING indicates a dangerous situation that, if not prevented, can lead to a severe injury or death.

⇨ Information as to how the danger can be prevented.

⚠ CAUTION

The signal word CAUTION indicates a dangerous situation that, if not prevented, can lead to a slight or moderate injury.

⇨ Information as to how the danger can be prevented.

NOTICE

The signal word NOTICE indicates a situation that, if not prevented, can lead to property damage.

⇨ Information as to how the property damage can be prevented.

This symbol indicates information concerning special workflows, methods, application of aids, etc.

Reference to information on the internet

Descriptive text

– Action step

Action step 1 (in ascending order)

Action step 2 (in ascending order)

⇨ Consequence of an action

- Listing

II Information on the document

Document overview

The specifications listed in these documents must be observed, because they are a prerequisite for fault free operation of the product and for the warranty granted by ZF Friedrichshafen AG. Please get in touch with your contact if you need binding documents.

Further to the acquisition of WABCO Group by ZF Group on May 29, 2020, the WABCO brand and trademarks are owned by and proprietary to the ZF Group.

Purpose of this document

This document is intended to be used by trailer manufacturers and workshops.

Structure of the name plate of the device

The name plate contains general information that helps to identify the device and it features. The most relevant information can be obtained from the product number of the device.

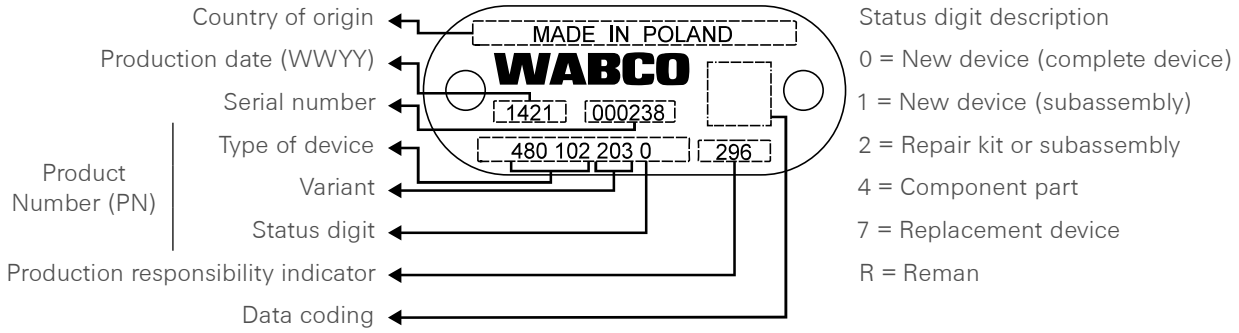

Choose genuine ZF parts

Genuine ZF parts (including WABCO branded parts) are made of high-quality materials and are rigorously tested before they leave our factories. You also have the assurance that the quality of every ZF product is supported by a powerful customer service network.

As a leading supplier to the industry, ZF collaborates with the world's leading original equipment manufacturers, and utilizes the experience and capabilities at its disposal to satisfy the most stringent production standards. The quality of every genuine ZF part is supported by:

- Tooling made for serial production
- Regular sub-supplier audits
- Exhaustive end-of-line tests
- Quality standards < 50 PPM

NOTICE

Installing replica parts can cost lives – genuine ZF parts protect your business.

Additional services

The package you will get with a genuine ZF part:

- 24-month product warranty, starting from when the product is manufactured
- Technical support from ZF
- Professional training solutions from the ZF [pro] Academy

– http://proacademy.zf.com/home/

- Access to diagnostics tools and support from the Service Partner network
- Straightforward claims handling

Online product catalogue

– https://www.wabco-customercentre.com/catalog/

The WABCO Customer Centre web page provides you with convenient access to the complete technical documentation. All documents are available in PDF format. Please contact your ZF partner for printed versions. Please note that the publications are not always available in all language versions.

Document title	Document number
CAN Router / CAN Repeater – System Description	815 XX0 176 3
System Diagnostics Software / Hardware – Product Overview and Installation	815 XX0 037 3
Pneumatic Air Brake Equipment for Trailer Vehicles	815 XX0 034 3
OptiTire™ – System Description	815 XX0 229 3
SmartBoard™ – System description	815 XX0 260 3
SmartBoard™ – User Manual	815 XX0 282 3
SCALAR EVO - Trailer Telematics	SCALAR solutions
Couplings Catalogue	815 XX0 080 3

*Language code XX: 01 = English, 02 = German, 03 = French, 04 = Spanish, 05 = Italian, 06 = Dutch, 07 = Swedish, 08 = Russian, 09 = Polish, 10 = Croatian, 11 = Romanian, 12 = Hungarian, 13 = Portuguese (Portugal), 14 = Turkish, 15 = Czech, 16 = Chinese, 17 = Korean, 18 = Japanese, 19 = Hebrew, 20 = Greek, 21 = Arabic, 24 = Danish, 25 = Lithuanian, 26 = Norwegian, 27 = Slovenian, 28 = Finnish, 29 = Estonian, 30 = Latvian, 31 = Bulgarian, 32 = Slovakian, 34 = Portuguese (Brazil), 35 = Macedonian, 36 = Albanian, 97 = German/English 98 = = multilingual, 99 = non-verbal

III Safety information

Observe all required provisions and instructions:

- Read this publication carefully.
  Adhere to all instructions, information and safety information to prevent injury to persons and damage to property.
  ZF will only guarantee the safety, reliability and performance of their products and systems if all the information in this publication is adhered to.
- Always abide by the trailer manufacturer's specifications and instructions.
- Observe all accident prevention regulations of the respective company as well as regional and national regulations.

Make provisions for a safe work environment:

- Only trained and qualified technicians are to perform work on the trailer.
- Use personal protective equipment if required (protective goggles, respiratory protection, ear protectors, etc.)
- A sudden relieve of brakes and pedal actuations can lead to severe injuries if persons are in the vicinity of the trailer. Make sure to follow the below instructions.
  - Switch the transmission to "neutral" and apply the park brake.
  - Secure the trailer against rolling by using chocks.
  - Fasten a visible note to the steering wheel indicating that work is being performed on the trailer and that the pedals are not to be actuated.
- The user operating any brake control device installed in the trailer shall be informed that the sudden release of the brakes can lead to a jerky motion of the trailer, and ensure that no persons are in a dangerous distance to the trailer prior to activating the control device.
- The driver is responsible for the checking the state of the vehicle and its components before each drive (e.g., according to 'Unfallverhütungsvorschrift DGUV Vorschrift 70: Fahrzeuge).

Avoid electrostatic charge and uncontrolled discharging (ESD):

Note during construction and building the trailer:

- Prevent potential differences between components (e.g., axles) and the trailer frame (chassis).
  Make sure that the resistance between metallic parts of the components and the trailer frame is less than 10 ohms.
  Establish an electrically conductive connection between moving or insulated trailer parts, such as axles, and the frame.
- Prevent differences in electric potential between the towing vehicle and the trailer.
  Make sure that an electrically conductive connection is made between metal parts in the towing vehicle and the coupled trailer via the coupling (king pin, fifth wheel, claws with pins), even without a cable being connected.
- Use electrically conductive bolted connections when fastening the iEBS modulator to the trailer frame.
- Run the cable inside metallic casing if at all possible (e.g., inside the U-beam) or behind metallic and grounded protective plating, to minimize the influence of electro-magnetic fields.
- Avoid the use of plastic materials if they can cause electrostatic charging.
- For electrostatic painting, connect the ground line of the ISO 7638 plug connection (pin 4) to the paint ground (trailer chassis).

While carrying out repair or welding work on the trailer, observe the following:

- Disconnect the battery (if installed in the trailer).
- Disconnect cable connections to devices and components and protect connectors and ports against contamination.
- When welding, always connect the grounding electrode directly with the metal next to the welding point to prevent magnetic fields and current flow via the cable or components.
- Make sure that current is well conducted by removing paint or rust.
- Prevent heat influences on devices and cabling when welding.

Special note when using prefabricated brackets for installations in the trailer:

Prefabricated brackets (A) are frequently installed in trailers as the result of optimized production processes at the trailer manufacturers. The bracket is then fastened to the trailer frame cross member (B).

The support modules are often painted, so when they are installed in the trailer frames, the electrical conductivity between the frame and support module must be restored.

Ensuring the electrical conductivity between the bracket and the trailer frame:

- Fasten the support module to the trailer frame with electrically conductive screw joints using self-tapping screws with a conducting surface.
- The resistance between the support module and the frame must be < 10 ohms.

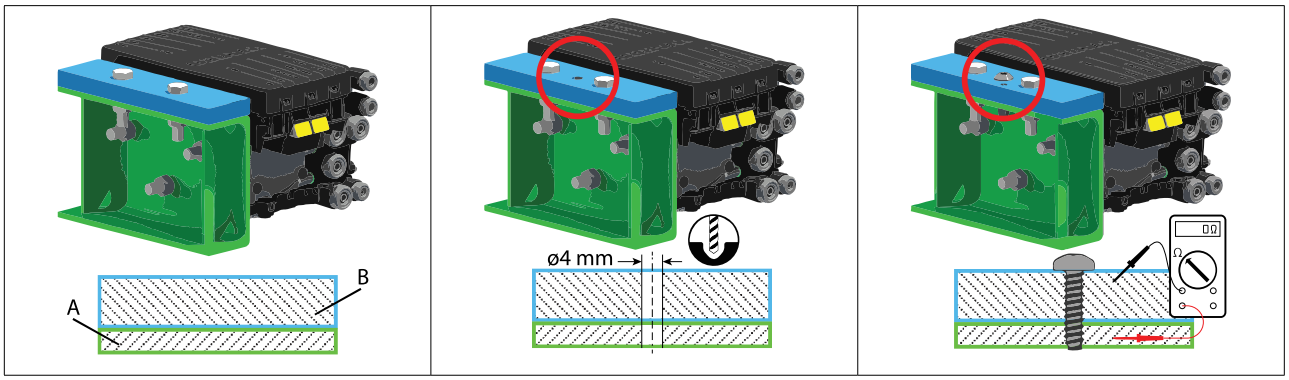

The combination of stainless steel and aluminum results in intense corrosion. Direct mounting on stainless steel beams is not permitted

Electromagnetic interference (EMI) and radiofrequency (RF) emissions

The iEBS modulator, available in versions with integrated functions such as OptiTire and without, is fully compliant with FCC regulations.

FCC rules provide a framework for the regulation of unlicensed radio frequency (RF) devices in the United States, aiming to prevent harmful interference with licensed radio services and to ensure operation within established technical standards.

The iEBS has undergone rigorous testing and certification to ensure it does not cause harmful interference and can tolerate any interference received, including that which may cause undesired operation.

According FCC §15.21, changes or modifications not expressly approved by the party responsible for compliance could void the user's authority to operate the equipment.

1 Introduction to the iEBS

1.1 Intelligent Electronic Braking System - iEBS

iEBS is the next generation of electronic braking systems for trailers. It is part of the Intelligent Braking Platform that offers a range of modulators that provide ABS and EBS functionality, along with all the required components. Through standardized cables, this platform simplifies the interchangeability of functions in the production line.

Like former generations, iEBS provides the brake functionality for category O3 and O4 trailers according to the latest UN/ECE regulations.

The system is modular and can be applied to all types of trailers and road trains. The components are designed for harsh environmental requirements and direct assembly to the chassis.

The development was performed according to latest functional safety standards (ISO 26262), implying readiness for future automated driving systems.

The iEBS modulator is available in different variants (i.e., Basic Steel, Basic Air, Standard and Premium) and features:

- Integrated emergency braking and anti-compounding function.
- An integrated overflow valve to supply the air suspension (only applies to air suspension variants)
- A Park Release Valve (PRV) with a single button design that simplifies both the control of the parking brake and the activation of the automatic emergency braking function of an uncoupled trailer.
- A new connector and cable concept with smaller connectors that are easy to install.
- A new diagnostic platform.

The basic brake functionalities of iEBS are:

- Braking via the electronic control line from the towing vehicle (via CAN data bus) resulting in improved response time, shorter braking distance and automatic harmonisation between truck and trailer.
- Load dependent braking by proportionally adjusting the brake pressure according to the trailer load, allowing for best compatibility between truck and trailer.
- Anti-Lock Braking System (ABS) to prevent locking of the wheels and secure trailer stability.
- Rollover Stability Support (RSS) to help prevent rollover of the trailer when driving too fast around corners and to assist the driver in unexpected everyday scenarios.

iEBS is compatible with the Intelligent Trailer Program (ITP). The ITP offers a range of innovative trailer functions that increase operational effectiveness, safety and driver comfort. The Intelligent Trailer Program gives the possibility to add functionalities and customize each trailer to meet specific requirements.

Intelligent Trailer Program

A list of ITP function available for iEBS can be found in chapter "10.7 Intelligent Trailer Program, functions overview", page 223

Additional information	QR code
Intelligent Trailer Program - Landing page Please contact your ZF partner for more information.	
820 010 356 3 - Intelligent Trailer Program - Brochure [EN]	

1.2 iEBS system design

The iEBS system is designed as an electronically controlled braking system with load-dependent braking pressure control, automatic Anti-Lock Braking System (ABS) and Rollover Stability Support (RSS).

iEBS is a Multi-Voltage system that supports input power supply from 8 to 32 V (for further information go to section "Multi-Voltage" on page 112). The peripheral components which are connected to iEBS are 12 V by default.

1.2.1 Scope of application

Vehicles

Category O3 (trailers with a maximum mass exceeding 3,500 kg, but not exceeding 10,000 kg) and O4 (trailers with a maximum mass exceeding 10,000 kg) trailers with one or more axles and that are pursuant to Directive 2007/46/EG, with air suspension, hydraulic suspension, mechanical suspension, disc or drum brakes.

Braking system

Power–assisted braking system with pneumatic or pneumatic-hydraulic transmission system pursuant to regulation UN/ECE R13 or local regulations (EC) No 661/2009.

Single, super single and twin tires

The tire size dimension is essential for the selection of the pole wheel teeth and the accuracy of the wheel speed signal obtained.

Identical tire dimensions must use the same number of pole wheel teeth to ensure a correct wheel speed.

A ratio of tire circumference to number of pole wheel teeth of ≥22 to ≤58 [mm/tooth] is permissible with iEBS.

The range for pole wheel teeth is between 50 and 160 teeth.

The dynamic tire circumference corresponds to the distance covered by one full revolution of the wheel.

Example:
The dynamic tire circumference for a 385/65R22.5 tire size is around 3350 mm, therefore a recommended pole wheel with 100 teeth is recommended (green dot in the table).

Increasing the number of teeth in a pole wheel will provide a better accuracy for the wheel speed signal.

For a high tire circumference value, it is recommended to select the highest permissible number for the pole wheel teeth.

iEBS pole wheel assignment ratio 22 ≤U/Z≤58 [mm/tooth]

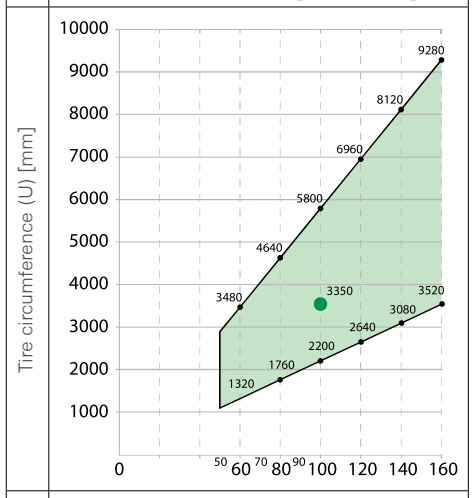

1.2.2 Approval reports and standards

Approval reports

Go to www.wabco-customercentre.com/catalog

Search for the iEBS modulator by entering the part number (e.g., 480 102 201 0) in the search box

Select the product from the results to be directed to the details of the device

The approval reports can be found in the documents section

Report (language)	Subject
EB188A	Trailer Anti-Lock Brake System
EB189A	EBS Extension to UN/ECE R13, Series 11, Annex 4 Annex 1, Chapter 3.2.3.1 Electromagnetic Compatibility Annex 2 CAN Repeater / CAN Router
EB190A	Rollover control function pursuant to UN/ECE R13 Series 11

Standards	Subject
ISO/TR 12155 DIN 75031	Commercial vehicles and trailer vehicles – Warning devices for maneuvering – Requirements and tests
DIN EN ISO 228 (Parts 1 - 2)	Pipe threads for connections that are not sealed with the threads
UN/ECE R13	Directive No. 13 of the Economic Commission of the United Nations for Europe – Uniform conditions for the certification of vehicles regarding the installation of the braking system
UN/ECE R 48 (2008)	Directive No. 48 of the Economic Commission of the United Nations for Europe – Uniform conditions for the certification of vehicles regarding the installation of lighting or light signaling equipment
ISO 1185	Road vehicles – Plug-in connections for electrically connecting towing vehicles and trailer vehicles – 7-pin plug-in connection Type 24 N (normal) for vehicles with 24 V nominal voltage
ISO 4141 (Parts 1 - 4)	Road vehicles – Multi-wire connecting lines
ISO 7638 (Parts 1 - 2)	Road vehicles – Plug-in connectors for the electrical connection of towing vehicles and trailer vehicles – Part 1: Plug-in connectors for braking systems and braking equipment of vehicles with 24 V / 12 V nominal voltage
ISO 11898 (Parts 1 - 5)	Road vehicles – CAN
ISO 11992 (Parts 1 - 2)	Road vehicles – Exchange of digital information via electrical connections between towing vehicles and trailer vehicles
ISO 12098	Road vehicles – Plug connections for electrically connecting towing vehicles and trailer vehicles – 15-pin plug connection for vehicles with 24 V nominal voltage
Regulation 141	Tyre pressure monitoring system regulation
Regulation 155	Cyber security and cyber security management system
Regulation 156	Software update and software update management system

4.3.11 OptiTire™ Integrated function

Application

OptiTire integrated is a Tire Pressure Monitoring System (TPMS) that is incorporated in the preactivated iEBS Standard and iEBS Premium modulators.

OptiTire integarted can be set up for trailers with up to 6 axles. For trailers with more than 6 axles or trailer applications that require an extended range of radio receiving, up to 3 additional OptiTire ECUs might be added as Range Extender to improve the receiving performance on complex applications.

Function

In the same way as with the external OptiTire, the pressure from the tires is measured by individual sensors. The measured values obtained by the sensors are repetitively transmitted to the iEBS modulator via radio signal.

Connecting the components

Sensor type	Sensor devices
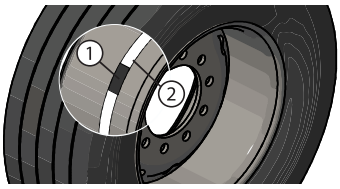	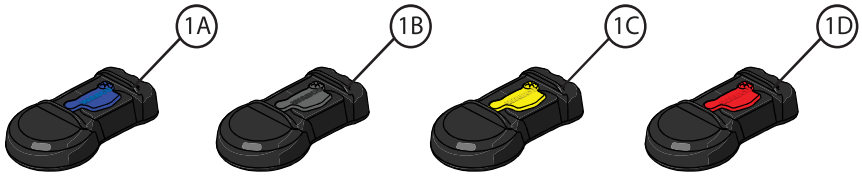
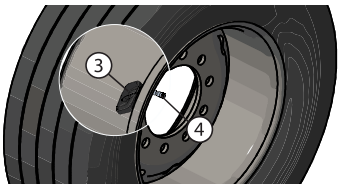	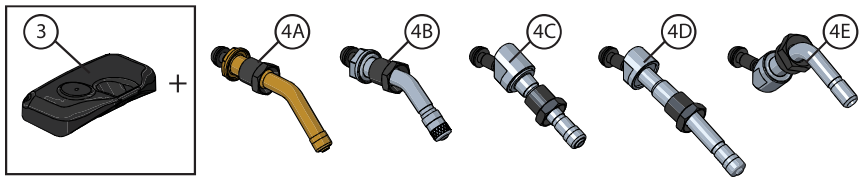

Item	Part number	Description	Maximum receiving distance	
			Single/Super single tires	Twing tires
1A	960 733 000 0	Blue strap mounted sensor	1.6 m	-
1B	960 733 001 0	Grey strap mounted sensor	2.5 m	2.2 m
1C	Not supplied	Yellow strap mounted sensor	-	-
1D	Not supplied	Red strap mounted sensor	-	-
2	960 733 117 0	Strap for rim size 17.5“	-	-
2	960 733 119 0	Strap for rim size 19.5“	-	-
2	960 733 122 0	Strap for rim size 22.5“	-	-
2	960 733 124 0	Strap for rim size 24.5“	-	-
3	960 732 000 0	Internal wheel sensor	2.5 m	2.2 m
4A	960 732 100 0	Steel rims 17 … 22.5"		
4B	960 732 102 0	Steel rims 17 … 22.5", additional 5° inclined section		
4C	960 732 104 0	ALU Rim		
4D	960 732 105 0	ALU Rim		
4E	960 732 117 0	ALU rim		

With iEBS as the gateway to the ISO 7638, all tire data according to the UN/ECE R13 can be forwarded to the driver’s dashboard.

Each tire of the trailer must be equipped with a pressure sensor.

Single / Super single tires configuration	Twin tires configuration
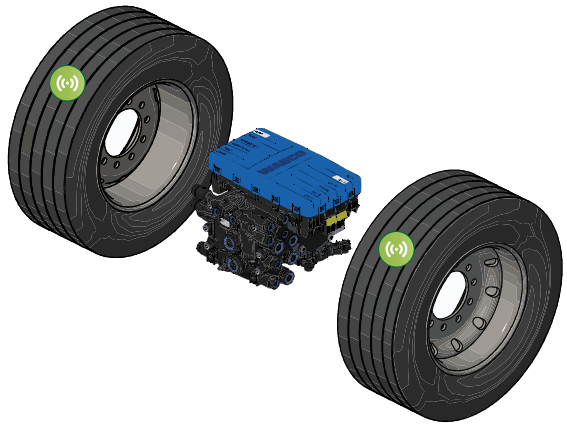	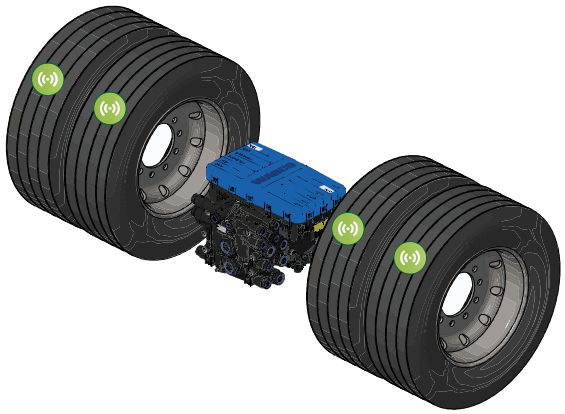

Item	Part number	Description	Comments
1	480 102 31 . 0	iEBS Standard	Only iEBS modulators with functions activated. Further information can be found on chapter "5.1.5 Integrated functions", page 131
1	480 102 41 . 0	iEBS Premium	

Range extender

The range extender is used when the communication distance between the tire pressure sensor and the main receiver exceeds the effectiverange of the radio signal. This can occur due to obstacles undert the trailer, interferance with other devices, or when trying to cover large distances (e.g., distance between the front and rear axle on a drawbar trailer).

If the trailer application requires the use of a range extender, this can be achieved by installing an OptiTire ECU that will be used to receive the radio messages from the wheel-modules. The received information will be forwarded over the CAN-bus to the iEBS modulator which will perform the complete data handling and inform the diver in case of pressure warnings issues.

Range extender connection			
Item	Part number	Description	Scheme connection
1	480 102 31 . 0	iEBS Standard (Only with functions activated)	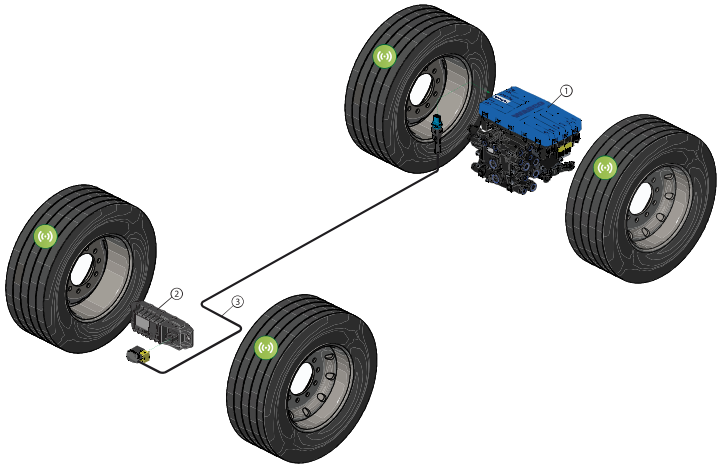
1	480 102 41 . 0	iEBS Premium (Only with functions activated)	
2	446 220 110 0	Range extender (OptiTire ECU)	
3	449 928 . . . 0	HDSCS cable	

Range extender			
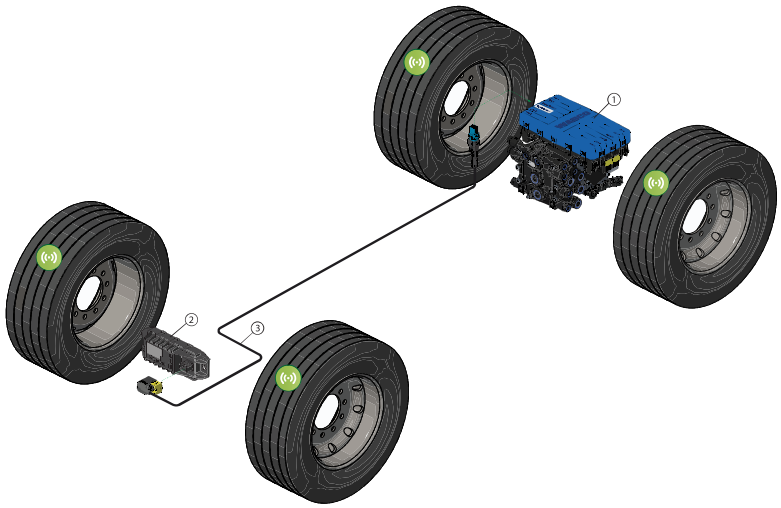			
Item	**Part number**	**Description**	**Comments**
1	480 102 31 . 0	iEBS Standard	iEBS version with functions activated
1	480 102 41 . 0	iEBS Premium	
2	446 220 110 0	OptiTire ECU	Used to receive the radio messages from the wheel-modules as a range extender
3	449 928 . . . 0	HDSCS cable	Cable lengths in chapter "10.6 Cable overview", page 218

Common OptiTire integrated trailer configurations

Trailer type	Semitrailer	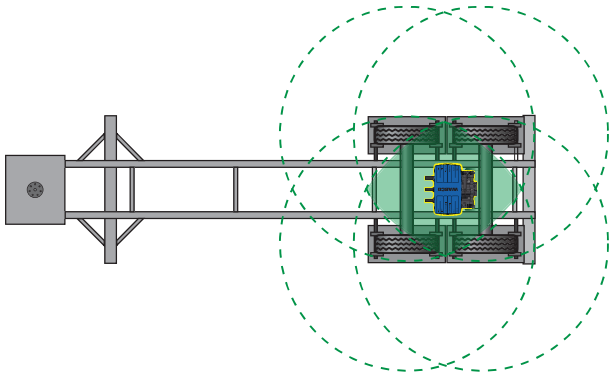
Number of axles	2 axles	
ABS control	4S/2M	
Modulator	iEBS Standard	
	iEBS Premium	
Reception support	Not required	
Tire configuration	For single/super single tires: 4 sensors	
Spare tires	Maximum 2 sensors	

Trailer type	Semitrailer	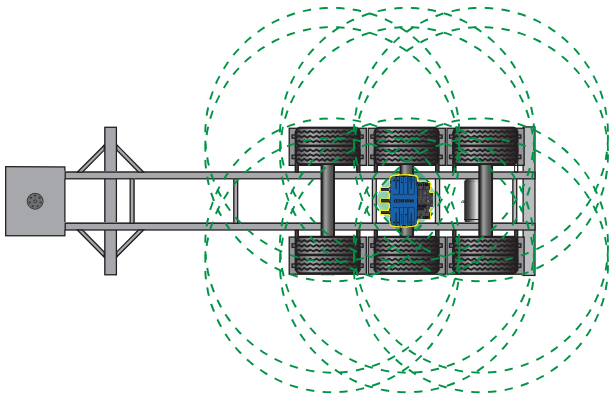
Number of axles	3 axles	
ABS control Modulator	4S/2M	
	iEBS Standard	
ABS control Modulator	4S/2M - 4S/3M	
	iEBS Premium	
Reception support	Not required	
Tire configuration	For twin tires:12 sensors	
Spare tires	Maximum 2 sensors	

Trailer type	Drawbar	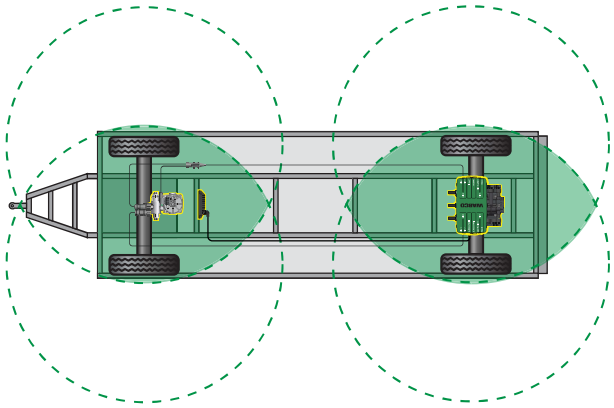
Number of axles	1 front, 1 rear axle	
ABS control	4S/3M	
Modulator	iEBS Premium	
Reception support	1x OptiTire ECU as range extender	
Tire configuration	For single/super single tires:4 sensors Optional For twin tires:8 sensors	
Spare tires	Maximum 2 sensors	

Parameter setting

The OptiTire integrated function can be configured in the iEBS diagnostic software in the tab System > Parameters > (6) Common functions > OptiTire integrated

The parameters allow the selection of:

- Sensor type: WIS, blue SMS, grey SMS or yellow SMS
- Tire configuration: Single tire, twin tire or super single tire
- Number of spare tires: 1 spare tire, 2 spare tires or none
- Range extender configuration: This option indicates that the iEBS modulator receives information from an OptiTire ECU that worKs has a range extender. Up to 3 range extenders can be connected.
- Temperature warning threshold: If internal sensors are used, a warning message can be given out when the defined temperature value is exceeded. The defaul value for this parameter is 100 °C (maximum value: 115 °C).

Common OptiTire integrated trailer configurations

Trailer type	Semitrailer	Semitrailer	Drawbar	Drawbar
Number of axles	2 axles	3 axles	1 front, 1 rear axle	2 front, 2 rear axle
ABS control	4S/2M	4S/3M	4S/3M	4S/3M
Modulator	iEBS Standard	iEBS Premium	iEBS Premium	iEBS Premium
Reception support	Not required	Not required	1x OptiTire ECU as range extender	1x OptiTire ECU as range extender
Tire configuration	• For twin tires: 8 sensors • For single/super single tires: 4 sensors	• For twin tires:12 sensors • For single/super single tires: 6 sensors	• For twin tires: 8 sensors • For single/super single tires: 4 sensors	• For twin tires: 16 sensors • For single/super single tires: 8 sensors
Spare tires	Maximum 2 sensors			

Sensor type	**Part number**	**Transmission baud rate**	**Maximum receiving distance**	
			Single/Super single tires	**Twing tires**
Internal wheel sensor	960 732 000 0	19200 [bauds]	2.5 m	2.2 m
Blue strap mounted sensor	960 733 000 0	19200 [bauds]	1.6 m	-
Grey strap mounted sensor	960 73 001 0	9600 [bauds]	2.5 m	2.2 m

4.3.11.1 OptiTire function overview

The overview of the OptiTire integrated system can be reviewed in the iEBS diagnostic software in the module Measure values > OptiTire integrated.

All the relevant information to determine the status of the tire pressure sensors is displayed in that module.

Overview

The tab overview shows the trailer configuration with the ID of each sensor as well as the actual pressure of each tire and

- Warning messages
- The type of sensors installed
- If a range extender is configured

In case of an unexpected behavior of the sensors, a DTC warning symbol will be displayed on the specific sensor/tire that shown that issue.

The color of the warning symbol represents the status of the fault

- red for currently present warning
- blue for fault that has been resolved
- grey if no fault are detected.

An assignment test can be perfomed to check the correct assignment of the wheel modules.

Signal strength

In this menu item, the signal strengths of the individual sensors are queried and displayed. The display can vary from weak signal strength (one bar) to strong signal strength (three bars).

If no bar is displayed on an internal sensor, rotate the affected wheel so that the sensor points toward the iEBS modulator or the OptiTire ECU that is working as a range extender. If there is still no sensor received, the distance to the receiver is too great and repositioning of it is recommended.

Signal availability

To determine a good availability of the received wheel module messages, the signal availability can be checked while the vehicle is stationary (with little movement of the vehicle) as well as while driving.

Good signal availability is considered when more than 50 % of the messages transmitted by the sensor are available for each wheel position. Below 33 %, a high probability of fault messages due to sensor messages not being received must be expected.

Reset data: Allows to reset all stored data related to the signal availability

Standstill test: This test allows to check the reception of the sensor's messages around one revolution of the circurfence. The test result is the overall availability of the system.

The standstill test is typically performed for trailers with complex axle configuraions in the following way:

- Place the vehicle in an open area where it will be possible to move forward the trailer in 12 equal parts.
- To measure the 12 positions it is recommended to mark the surface of the tire with chalk in 12 equal parts (e.g., like the hours of a clock) or to make 12 lines on the ground that will represent the circunference of the tire (e.g., the tire circumference of a 385/65R22.5 tire size is around 3350 mm, therefore the distance between the lines shall be around 28 cm)
- Place the trailer at the first measuring position and start the reception test.
- The measurment of messages at each position takes 3 minutes.
- Once the measurement of the messages has finished, move the vechicle to the next position and click start to measure again.
- Repeat the process untill al the 12 positions are completed.
- After the last measurement, the overall result is output, and details are displayed in a log.

OptiTire Integrated – Sensor assignment.

The sensor assignment of the OptiTire integrated system can be reviewed in the iEBS diagnostic software in the module System > OptiTire sensor assignment.

The assignment ensures that all entries, including the sensor ID, have been made correctly during configuration. The sensors can be assigned by means of:

- Free assignment: Used to assign specific sensor(s). Typically used after a wheel or sensor replacement
- Sequential assignment: This option will perform the assignment of all the sensors installed on the vehicle in a determined sequence.

The sensor's information is commonly gathered by the system via stimulation. For this purpose, a diagnostic message is stimulated for the selected sensors and the corresponding ID is inserted automatically at the selected position. Otherwise, it is possible to manually enter the data of the sensors.