Date/Time: 12/20/04 11:25:53

Test Laboratory: Advance Data Technology

WL UD 2554 17A 11a Turbo Mode Bottom Mode 3 Ch 1

DUT: 802.11 a+g Wireless USB Dongle ; Type: WL UD 2554 17A ; Test Frequency: 5210 MHz

Communication System: 802.11a ; Frequency: 5210 MHz ; Duty Cycle: 1:1 ; Modulation type: OFDM
Medium: MSL5800 Medium parameters used: f = 5210 MHz; σ = 5.36 mho/m; ε_r = 47.5; ρ = 1000 kg/m^3 ; Liquid level : 150 mm
Phantom section: Flat Section ; Separation distance : 6 mm (The bottom side of the EUT to the Phantom)
Antenna type : Internal Antenna ; Air temp. : 22.0 degrees ; Liquid temp. : 21.0 degrees
DASY4 Configuration:
- Probe: EX3DV3 - SN3504 ; ConvF(4.29, 4.29, 4.29) ; Calibrated: 2004/2/20
- Sensor-Surface: 2mm (Mechanical Surface Detection)
- Electronics: DAE3 Sn510 ; Calibrated: 2004/8/17
- Phantom: SAM 12 ; Type: SAM V4.0 ; Serial: TP 1202
- Measurement SW: DASY4, V4.4 Build 3 ; Postprocessing SW: SEMCAD, V1.8 Build 130

f:5210 Turbo Mode/Area Scan (7x11x1): Measurement grid: dx=10mm, dy=10mm
Maximum value of SAR (measured) = 0.116 mW/g

f:5210 Turbo Mode/Zoom Scan (8x8x9)/Cube 0: Measurement grid: dx=4.3mm, dy=4.3mm, dz=3mm
Reference Value = 1.17 V/m; Power Drift = 0.2 dB
Peak SAR (extrapolated) = 1060615.2 W/kg
SAR(1 g) = 0.038 mW/g; SAR(10 g) = 0.00736 mW/g
Maximum value of SAR (measured) = 0.129 mW/g

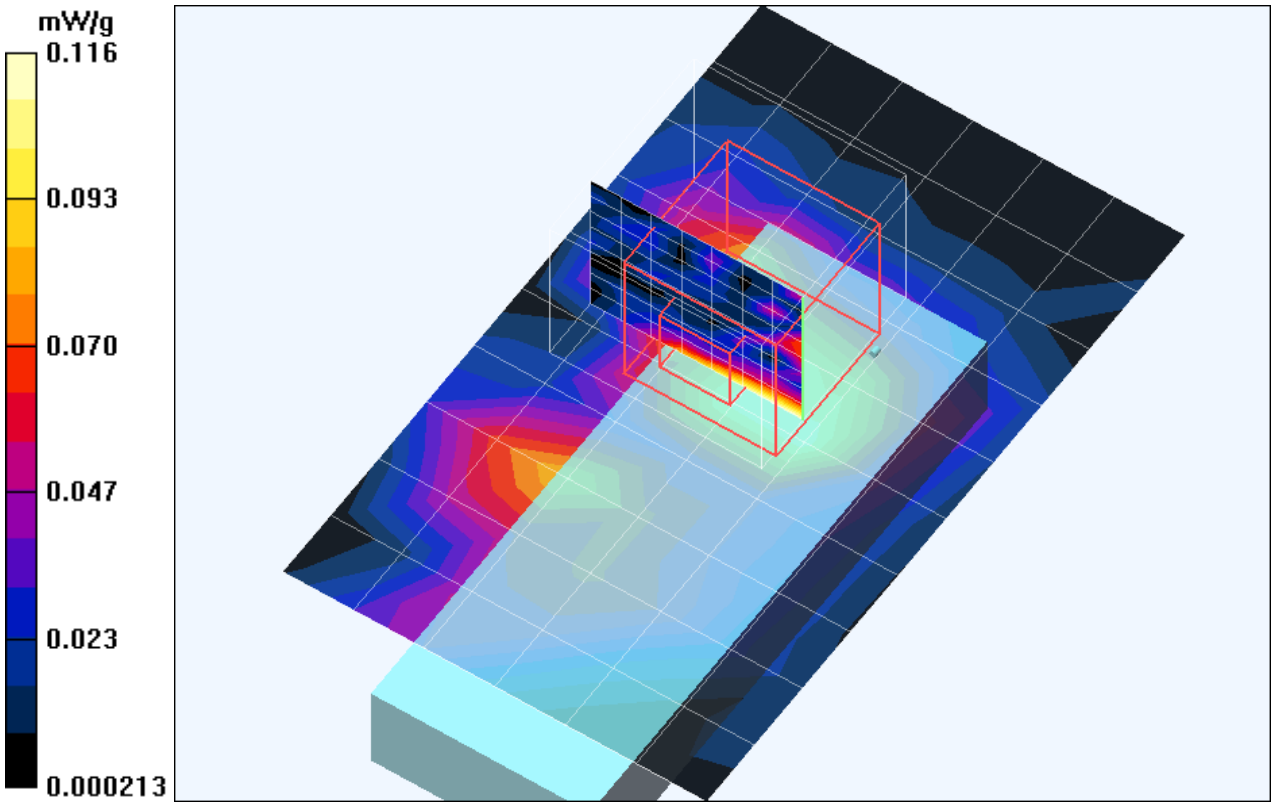

Date/Time: 12/20/04 11:56:04

Test Laboratory: Advance Data Technology

WL UD 2554 17A 11a Turbo Mode Bottom Mode 3 Ch 2

DUT: 802.11 a+g Wireless USB Dongle ; Type: WL UD 2554 17A ; Test Frequency: 5250 MHz

Communication System: 802.11a ; Frequency: 5250 MHz ; Duty Cycle: 1:1 ; Modulation type: OFDM
Medium: MSL5800 Medium parameters used: f = 5250 MHz; σ = 5.42 mho/m; ε_r = 47.4; ρ = 1000 kg/m^3 ; Liquid level : 150 mm
Phantom section: Flat Section ; Separation distance : 6 mm (The bottom side of the EUT to the Phantom)
Antenna type : Internal Antenna ; Air temp. : 22.0 degrees ; Liquid temp. : 21.0 degrees
DASY4 Configuration:
- Probe: EX3DV3 - SN3504 ; ConvF(4.29, 4.29, 4.29) ; Calibrated: 2004/2/20
- Sensor-Surface: 2mm (Mechanical Surface Detection)
- Electronics: DAE3 Sn510 ; Calibrated: 2004/8/17
- Phantom: SAM 12 ; Type: SAM V4.0 ; Serial: TP 1202
- Measurement SW: DASY4, V4.4 Build 3 ; Postprocessing SW: SEMCAD, V1.8 Build 130

f:5250 Turbo Mode/Area Scan (7x11x1): Measurement grid: dx=10mm, dy=10mm
Maximum value of SAR (measured) = 0.210 mW/g

f:5250 Turbo Mode/Zoom Scan (8x8x9)/Cube 0: Measurement grid: dx=4.3mm, dy=4.3mm, dz=3mm
Reference Value = 2.38 V/m; Power Drift = 0.1 dB
Peak SAR (extrapolated) = 268099568.7 W/kg
SAR(1 g) = 0.046 mW/g; SAR(10 g) = 0.013 mW/g
Maximum value of SAR (measured) = 0.205 mW/g

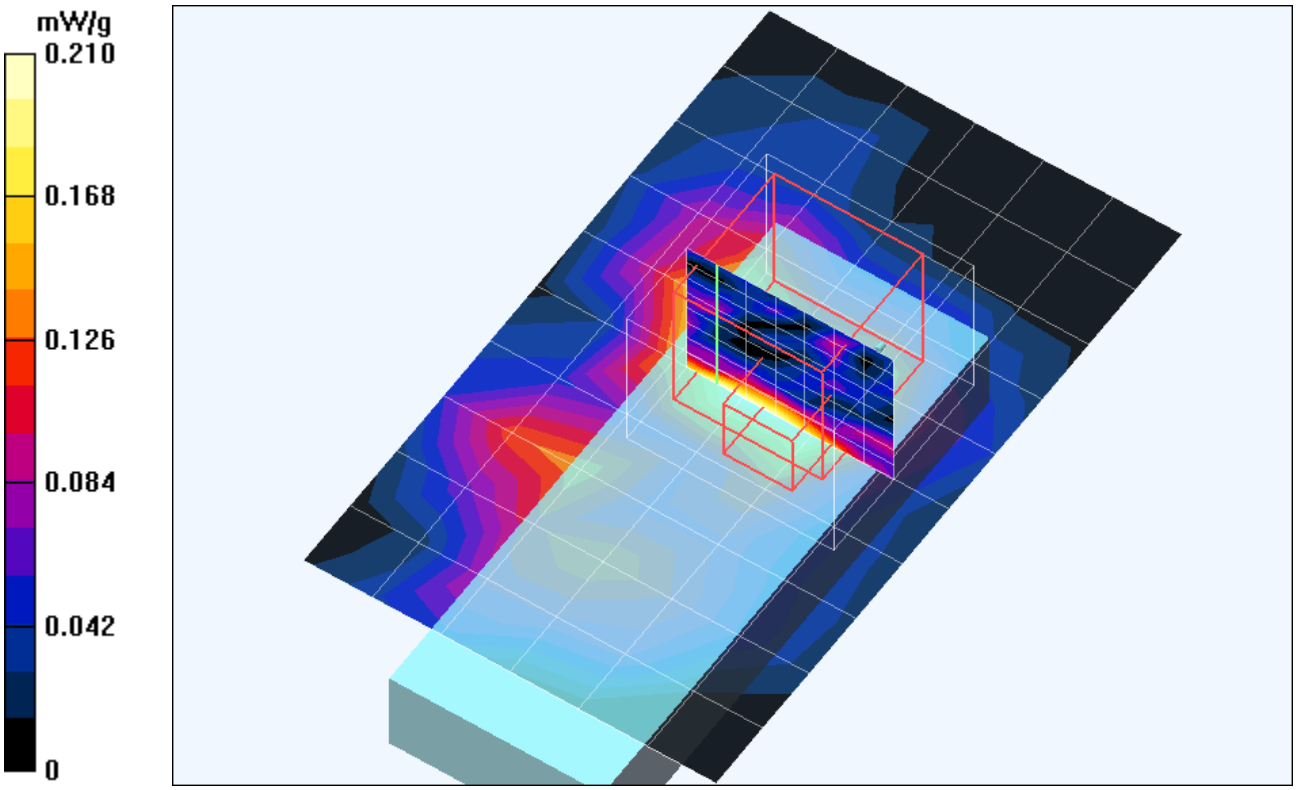

Date/Time: 12/20/04 12:34:39

Test Laboratory: Advance Data Technology

WL UD 2554 17A 11a Turbo Mode Bottom Mode 3 Ch 3

DUT: 802.11 a+g Wireless USB Dongle ; Type: WL UD 2554 17A ; Test Frequency: 5290 MHz

Communication System: 802.11a ; Frequency: 5290 MHz ; Duty Cycle: 1:1 ; Modulation type: OFDM
Medium: MSL5800 Medium parameters used: f = 5290 MHz; σ = 5.47 mho/m; ε_r = 47.3; ρ = 1000 kg/m^3 ; Liquid level : 150 mm
Phantom section: Flat Section ; Separation distance : 6 mm (The bottom side of the EUT to the Phantom)
Antenna type : Internal Antenna ; Air temp. : 22.0 degrees ; Liquid temp. : 21.0 degrees
DASY4 Configuration:
- Probe: EX3DV3 - SN3504 ; ConvF(4.29, 4.29, 4.29) ; Calibrated: 2004/2/20
- Sensor-Surface: 2mm (Mechanical Surface Detection)
- Electronics: DAE3 Sn510 ; Calibrated: 2004/8/17
- Phantom: SAM 12 ; Type: SAM V4.0 ; Serial: TP 1202
- Measurement SW: DASY4, V4.4 Build 3 ; Postprocessing SW: SEMCAD, V1.8 Build 130

f:5290 Turbo Mode/Area Scan (7x11x1): Measurement grid: dx=10mm, dy=10mm
Maximum value of SAR (measured) = 0.263 mW/g

f:5290 Turbo Mode/Zoom Scan (8x8x9)/Cube 0: Measurement grid: dx=4.3mm, dy=4.3mm, dz=3mm
Reference Value = 2.63 V/m; Power Drift = 0.2 dB
Peak SAR (extrapolated) = 31115972.2 W/kg
SAR(1 g) = 0.079 mW/g; SAR(10 g) = 0.030 mW/g
Maximum value of SAR (measured) = 0.257 mW/g

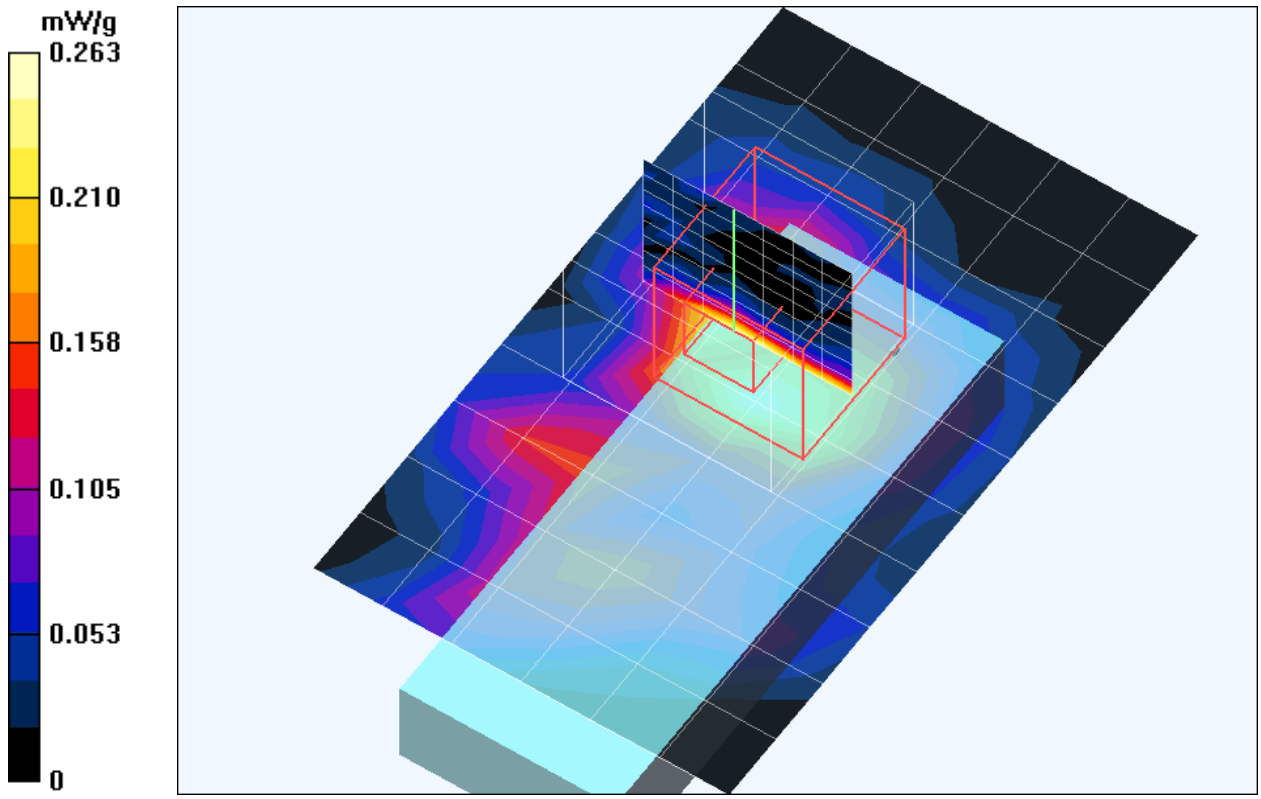

Date/Time: 12/20/04 13:08:19

Test Laboratory: Advance Data Technology

WL UD 2554 17A 11a Turbo Mode Bottom Mode 3 Ch 4

DUT: 802.11 a+g Wireless USB Dongle ; Type: WL UD 2554 17A ; Test Frequency: 5760 MHz

Communication System: 802.11a ; Frequency: 5760 MHz ; Duty Cycle: 1:1 ; Modulation type: OFDM
Medium: MSL5800 Medium parameters used: f = 5760 MHz; σ = 6.16 mho/m; ε_r = 46.4; ρ = 1000 kg/m^3 ; Liquid level : 150 mm
Phantom section: Flat Section ; Separation distance : 6 mm (The bottom side of the EUT to the Phantom)
Antenna type : Internal Antenna ; Air temp. : 22.0 degrees ; Liquid temp. : 21.0 degrees
DASY4 Configuration:
- Probe: EX3DV3 - SN3504 ; ConvF(3.96, 3.96, 3.96) ; Calibrated: 2004/2/20
- Sensor-Surface: 2mm (Mechanical Surface Detection)
- Electronics: DAE3 Sn510 ; Calibrated: 2004/8/17
- Phantom: SAM 12 ; Type: SAM V4.0 ; Serial: TP 1202
- Measurement SW: DASY4, V4.4 Build 3 ; Postprocessing SW: SEMCAD, V1.8 Build 130

f:5760 Turbo Mode/Area Scan (7x11x1): Measurement grid: dx=10mm, dy=10mm
Maximum value of SAR (measured) = 0.564 mW/g

f:5760 Turbo Mode/Zoom Scan (8x8x9)/Cube 0: Measurement grid: dx=4.3mm, dy=4.3mm, dz=3mm
Reference Value = 4.28 V/m; Power Drift = 0.2 dB
Peak SAR (extrapolated) = 1660217.9 W/kg
SAR(1 g) = 0.161 mW/g; SAR(10 g) = 0.051 mW/g
Maximum value of SAR (measured) = 0.565 mW/g

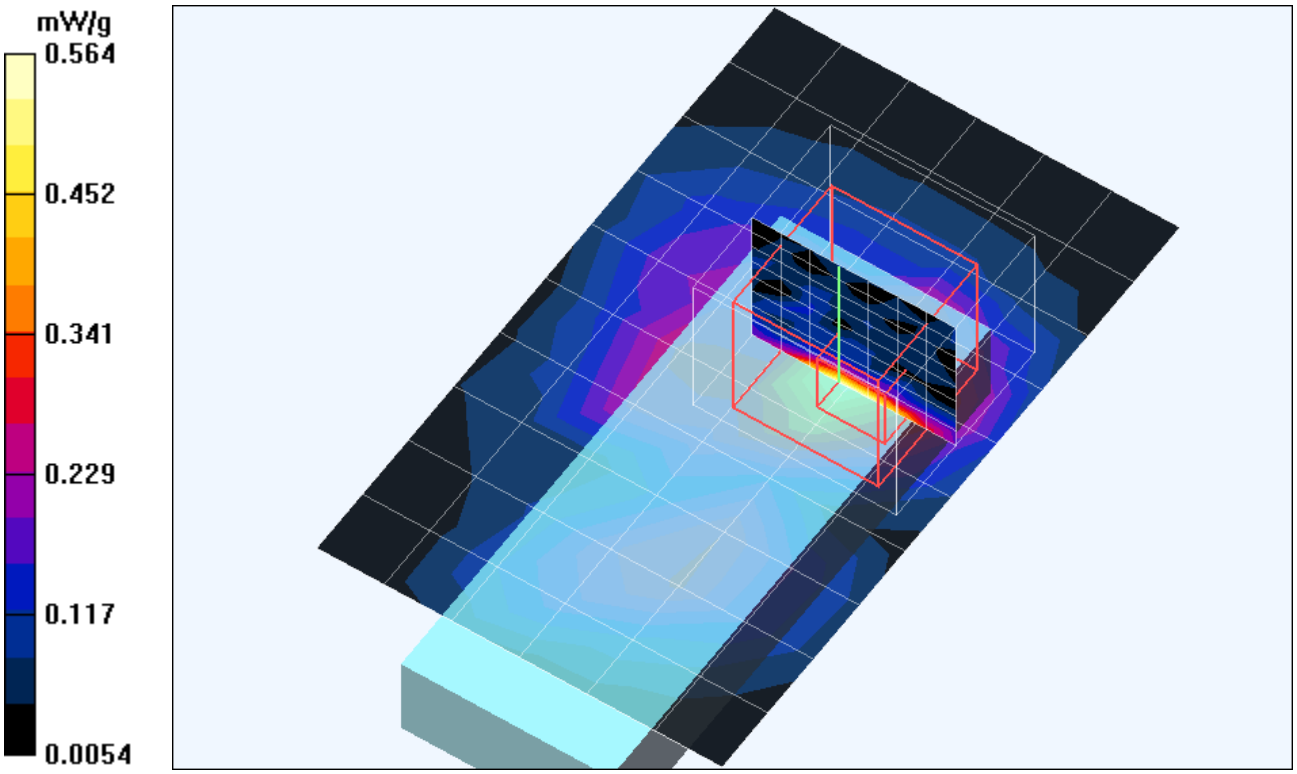

Date/Time: 12/20/04 13:40:32

Test Laboratory: Advance Data Technology

WL UD 2554 17A 11a Turbo Mode Bottom Mode 3 Ch 5

DUT: 802.11 a+g Wireless USB Dongle ; Type: WL UD 2554 17A ; Test Frequency: 5800 MHz

Communication System: 802.11a ; Frequency: 5800 MHz ; Duty Cycle: 1:1 ; Modulation type: OFDM
Medium: MSL5800 Medium parameters used: f = 5800 MHz; σ = 6.22 mho/m; ε_r = 46.3; ρ = 1000 kg/m^3 ; Liquid level : 150 mm
Phantom section: Flat Section ; Separation distance : 6 mm (The bottom side of the EUT to the Phantom)
Antenna type : Internal Antenna ; Air temp. : 22.0 degrees ; Liquid temp. : 21.0 degrees
DASY4 Configuration:
- Probe: EX3DV3 - SN3504 ; ConvF(3.96, 3.96, 3.96) ; Calibrated: 2004/2/20
- Sensor-Surface: 2mm (Mechanical Surface Detection)
- Electronics: DAE3 Sn510 ; Calibrated: 2004/8/17
- Phantom: SAM 12 ; Type: SAM V4.0 ; Serial: TP 1202
- Measurement SW: DASY4, V4.4 Build 3 ; Postprocessing SW: SEMCAD, V1.8 Build 130

f:5800 Turbo Mode/Area Scan (7x11x1): Measurement grid: dx=10mm, dy=10mm
Maximum value of SAR (measured) = 0.551 mW/g

f:5800 Turbo Mode/Zoom Scan (8x8x9)/Cube 0: Measurement grid: dx=4.3mm, dy=4.3mm, dz=3mm
Reference Value = 4.23 V/m; Power Drift = 0.2 dB
Peak SAR (extrapolated) = 7437778.5 W/kg
SAR(1 g) = 0.150 mW/g; SAR(10 g) = 0.043 mW/g
Maximum value of SAR (measured) = 0.520 mW/g

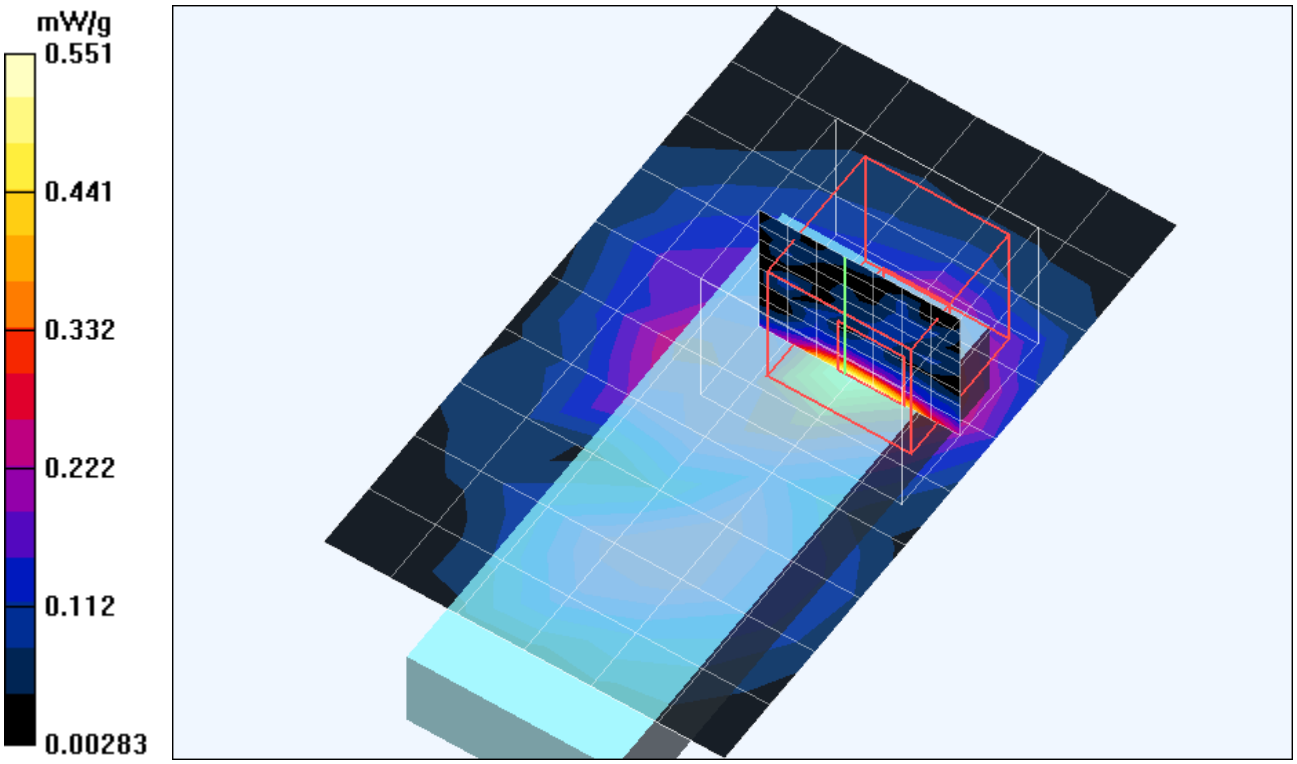

Date/Time: 12/20/04 14:28:57

Test Laboratory: Advance Data Technology

WL UD 2554 17A 11a Turbo Mode Tip Mode 4 Ch 1

DUT: 802.11 a+g Wireless USB Dongle ; Type: WL UD 2554 17A ; Test Channel Frequency: 5210 MHz

Communication System: 802.11a ; Frequency: 5210 MHz; Duty Cycle: 1:1; Modulation type: OFDM
Medium: MSL5800 Medium parameters used: f = 5210 MHz; σ = 5.36 mho/m; ε_r = 47.5; ρ = 1000 kg/m^3 ; Liquid level : 150 mm
Phantom section: Flat Section ; Separation distance : 0 mm (The tip of the EUT to the Phantom)
Antenna type : Internal Antenna ; Air temp. : 22.0 degrees ; Liquid temp. : 21.0 degrees
DASY4 Configuration:
- Probe: EX3DV3 - SN3504 ; ConvF(4.29, 4.29, 4.29) ; Calibrated: 2004/2/20
- Sensor-Surface: 2mm (Mechanical Surface Detection)
- Electronics: DAE3 Sn510; Calibrated: 2004/8/17
- Phantom: SAM 12; Type: SAM V4.0; Serial: TP 1202
- Measurement SW: DASY4, V4.4 Build 3; Postprocessing SW: SEMCAD, V1.8 Build 130

f:5210 Turbo Mode/Area Scan (10x12x1): Measurement grid: dx=10mm, dy=10mm
Maximum value of SAR (measured) = 0.189 mW/g

f:5210 Turbo Mode/Zoom Scan (8x8x9)/Cube 0: Measurement grid: dx=4.3mm, dy=4.3mm, dz=3mm
Reference Value = 6.4 V/m; Power Drift = 0.2 dB
Peak SAR (extrapolated) = 984752241.7 W/kg
SAR(1 g) = 0.062 mW/g; SAR(10 g) = 0.014 mW/g
Maximum value of SAR (measured) = 0.201 mW/g

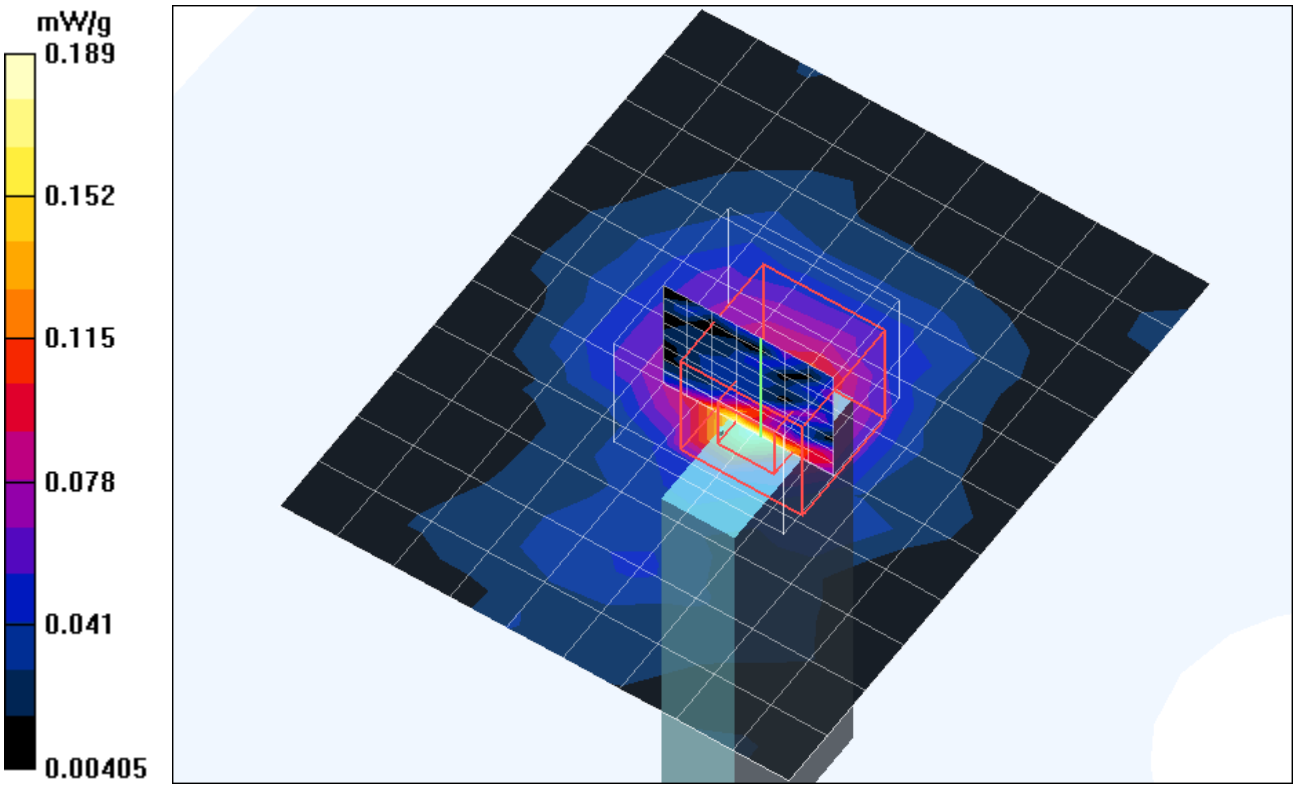

Date/Time: 12/20/04 14:59:08

Test Laboratory: Advance Data Technology

WL UD 2554 17A 11a Turbo Mode Tip Mode 4 Ch 2

DUT: 802.11 a+g Wireless USB Dongle ; Type: WL UD 2554 17A ; Test Channel Frequency: 5250 MHz

Communication System: 802.11a ; Frequency: 5250 MHz; Duty Cycle: 1:1; Modulation type: OFDM
Medium: MSL5800 Medium parameters used: f = 5250 MHz; σ = 5.42 mho/m; ε_r = 47.4; ρ = 1000 kg/m^3 ; Liquid level : 150 mm
Phantom section: Flat Section ; Separation distance : 0 mm (The tip of the EUT to the Phantom)
Antenna type : Internal Antenna ; Air temp. : 22.0 degrees ; Liquid temp. : 21.0 degrees
DASY4 Configuration:
- Probe: EX3DV3 - SN3504 ; ConvF(4.29, 4.29, 4.29) ; Calibrated: 2004/2/20
- Sensor-Surface: 2mm (Mechanical Surface Detection)
- Electronics: DAE3 Sn510; Calibrated: 2004/8/17
- Phantom: SAM 12; Type: SAM V4.0; Serial: TP 1202
- Measurement SW: DASY4, V4.4 Build 3; Postprocessing SW: SEMCAD, V1.8 Build 130

f:5250 Turbo Mode/Area Scan (10x12x1): Measurement grid: dx=10mm, dy=10mm
Maximum value of SAR (measured) = 0.326 mW/g

f:5250 Turbo Mode/Zoom Scan (8x8x9)/Cube 0: Measurement grid: dx=4.3mm, dy=4.3mm, dz=3mm
Reference Value = 8.49 V/m; Power Drift = 0.1 dB
Peak SAR (extrapolated) = 5.19 W/kg
SAR(1 g) = 0.098 mW/g; SAR(10 g) = 0.033 mW/g
Maximum value of SAR (measured) = 0.327 mW/g

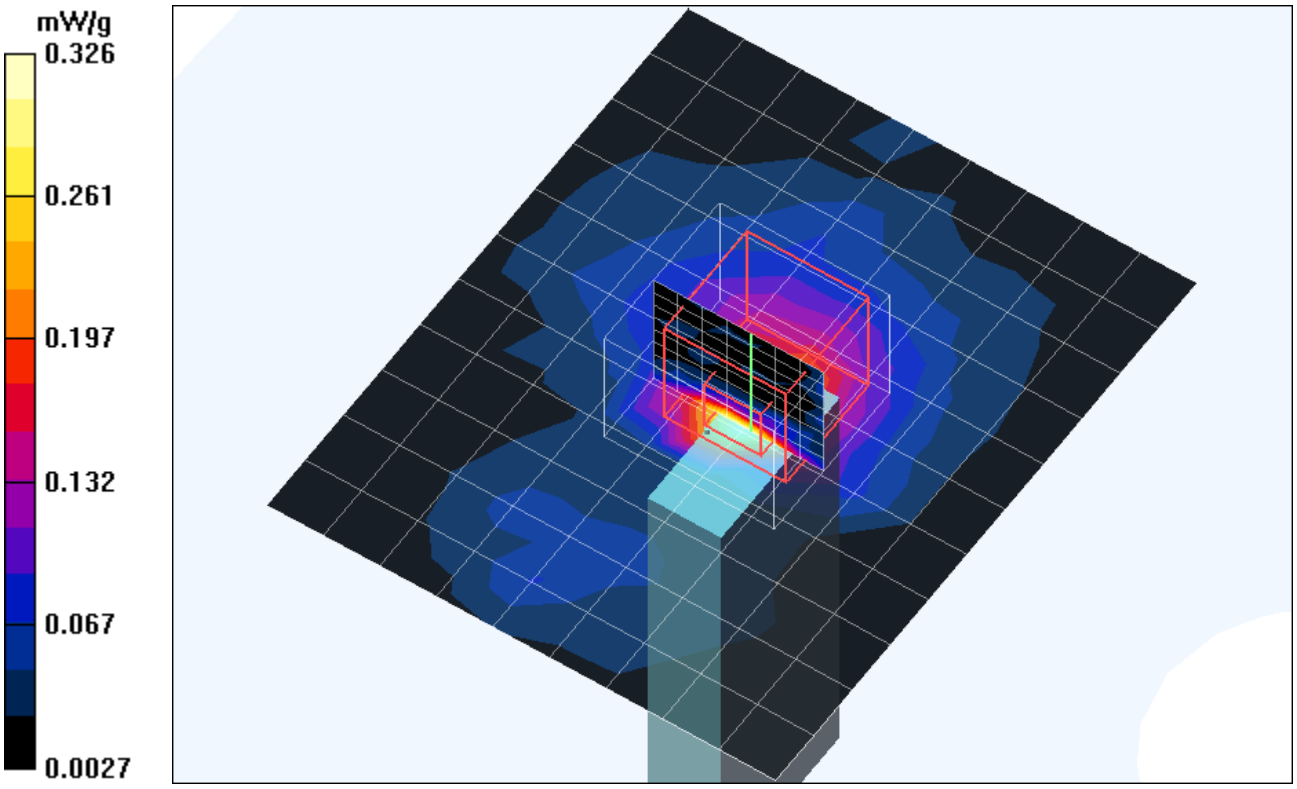

Date/Time: 12/20/04 15:33:15

Test Laboratory: Advance Data Technology

WL UD 2554 17A 11a Turbo Mode Tip Mode 4 Ch 3

DUT: 802.11 a+g Wireless USB Dongle ; Type: WL UD 2554 17A ; Test Channel Frequency: 5290 MHz

Communication System: 802.11a ; Frequency: 5290 MHz; Duty Cycle: 1:1; Modulation type: OFDM
Medium: MSL5800 Medium parameters used: f = 5290 MHz; σ = 5.47 mho/m; ε_r = 47.3; ρ = 1000 kg/m^3 ; Liquid level : 150 mm
Phantom section: Flat Section ; Separation distance : 0 mm (The tip of the EUT to the Phantom)
Antenna type : Internal Antenna ; Air temp. : 22.0 degrees ; Liquid temp. : 21.0 degrees
DASY4 Configuration:
- Probe: EX3DV3 - SN3504 ; ConvF(4.29, 4.29, 4.29) ; Calibrated: 2004/2/20
- Sensor-Surface: 2mm (Mechanical Surface Detection)
- Electronics: DAE3 Sn510; Calibrated: 2004/8/17
- Phantom: SAM 12; Type: SAM V4.0; Serial: TP 1202
- Measurement SW: DASY4, V4.4 Build 3; Postprocessing SW: SEMCAD, V1.8 Build 130

f:5290 Turbo Mode/Area Scan (10x12x1): Measurement grid: dx=10mm, dy=10mm
Maximum value of SAR (measured) = 0.533 mW/g

f:5290 Turbo Mode/Zoom Scan (8x8x9)/Cube 0: Measurement grid: dx=4.3mm, dy=4.3mm, dz=3mm
Reference Value = 10.7 V/m; Power Drift = 0.0 dB
Peak SAR (extrapolated) = 610339.0 W/kg
SAR(1 g) = 0.147 mW/g; SAR(10 g) = 0.047 mW/g
Maximum value of SAR (measured) = 0.511 mW/g

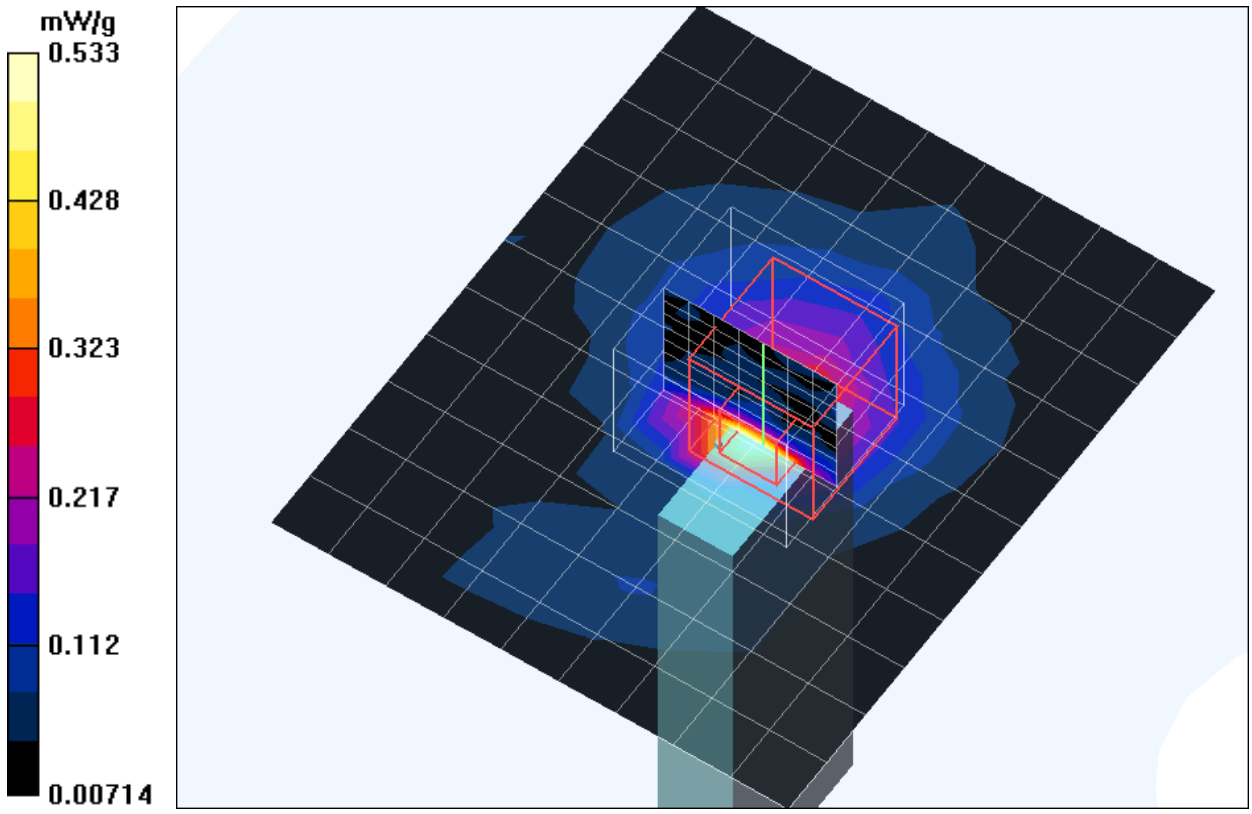

Date/Time: 12/20/04 16:04:23

Test Laboratory: Advance Data Technology

WL UD 2554 17A 11a Turbo Mode Tip Mode 4 Ch 4

DUT: 802.11 a+g Wireless USB Dongle ; Type: WL UD 2554 17A ; Test Channel Frequency: 5760 MHz

Communication System: 802.11a ; Frequency: 5760 MHz; Duty Cycle: 1:1; Modulation type: OFDM
Medium: MSL5800 Medium parameters used: f = 5760 MHz; σ = 6.16 mho/m; ε_r = 46.4; ρ = 1000 kg/m^3 ; Liquid level : 150 mm
Phantom section: Flat Section ; Separation distance : 0 mm (The tip of the EUT to the Phantom)
Antenna type : Internal Antenna ; Air temp. : 22.0 degrees ; Liquid temp. : 21.0 degrees
DASY4 Configuration:
- Probe: EX3DV3 - SN3504 ; ConvF(3.96, 3.96, 3.96) ; Calibrated: 2004/2/20
- Sensor-Surface: 2mm (Mechanical Surface Detection)
- Electronics: DAE3 Sn510; Calibrated: 2004/8/17
- Phantom: SAM 12; Type: SAM V4.0; Serial: TP 1202
- Measurement SW: DASY4, V4.4 Build 3; Postprocessing SW: SEMCAD, V1.8 Build 130

f:5760 Turbo Mode/Area Scan (10x12x1): Measurement grid: dx=10mm, dy=10mm
Maximum value of SAR (measured) = 1.13 mW/g

f:5760 Turbo Mode/Zoom Scan (8x8x9)/Cube 0: Measurement grid: dx=4.3mm, dy=4.3mm, dz=3mm
Reference Value = 14.8 V/m; Power Drift = -0.2 dB
Peak SAR (extrapolated) = 27.3 W/kg
SAR(1 g) = 0.284 mW/g; SAR(10 g) = 0.091 mW/g
Maximum value of SAR (measured) = 1.17 mW/g

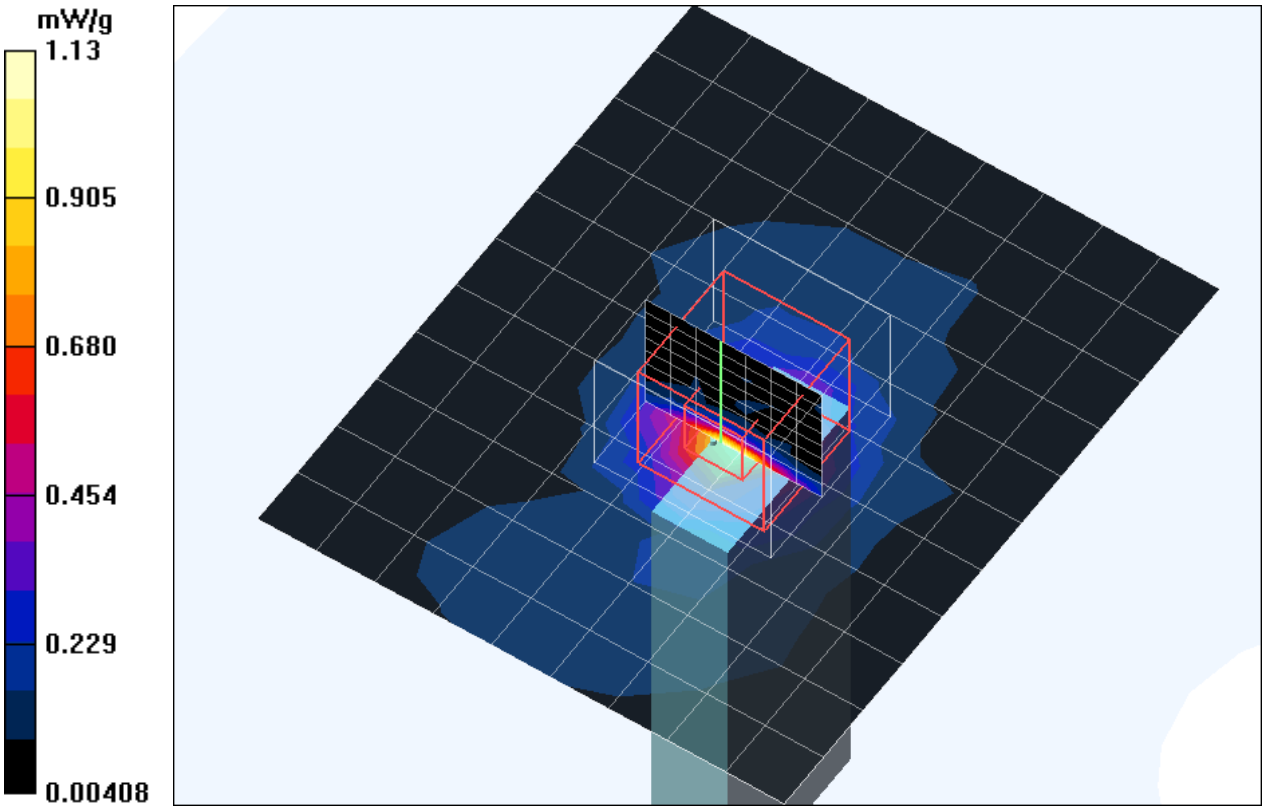

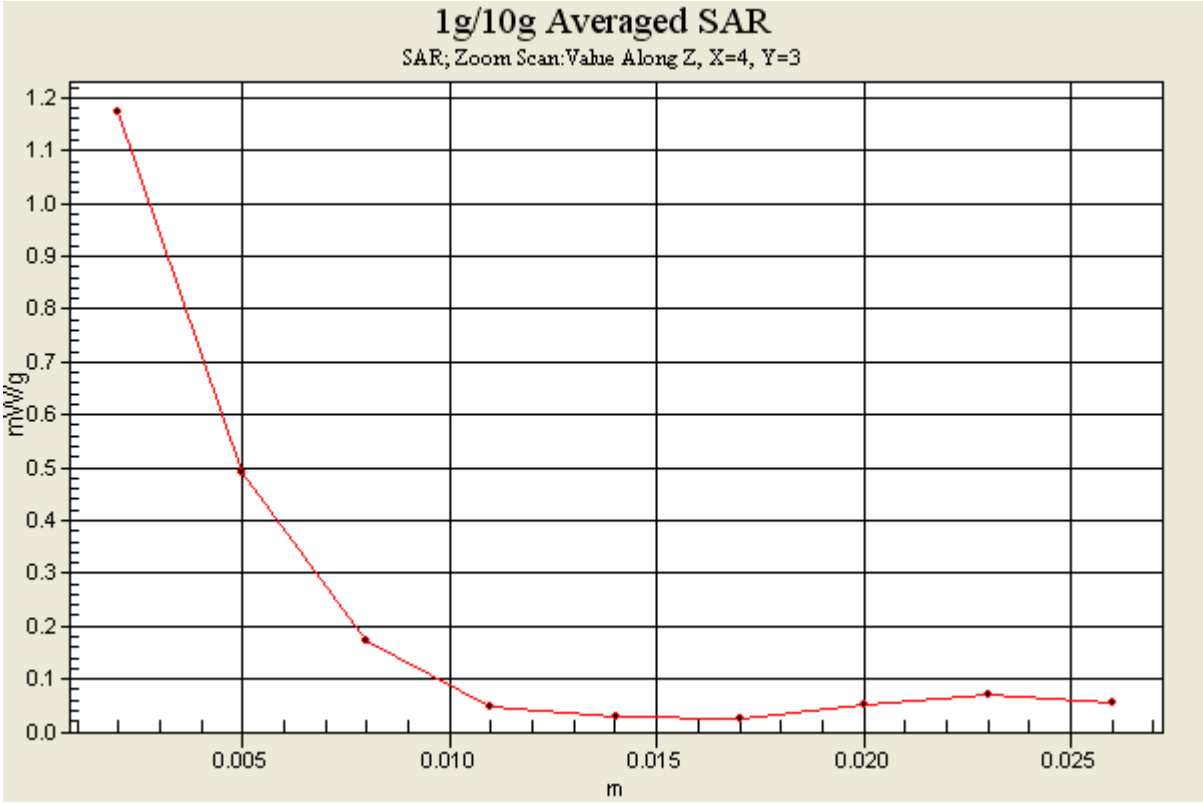
1g/10g Averaged SAR
SAR; Zoom Scan:Value Along Z, X=4, Y=3
mW/g
1.2
1.1
1.0
0.9
0.8
0.7
0.6
0.5
0.4
0.3
0.2
0.1
0.0
0.005
0.010
0.015
0.020
0.025
m

Date/Time: 12/20/04 16:40:56

Test Laboratory: Advance Data Technology

WL UD 2554 17A 11a Turbo Mode Tip Mode 4 Ch 5

DUT: 802.11 a+g Wireless USB Dongle ; Type: WL UD 2554 17A ; Test Channel Frequency: 5800 MHz

Communication System: 802.11a ; Frequency: 5800 MHz; Duty Cycle: 1:1; Modulation type: OFDM
Medium: MSL5800 Medium parameters used: f = 5800 MHz; σ = 6.22 mho/m; ε_r = 46.3; ρ = 1000 kg/m^3 ; Liquid level : 150 mm
Phantom section: Flat Section ; Separation distance : 0 mm (The tip of the EUT to the Phantom)
Antenna type : Internal Antenna ; Air temp. : 22.0 degrees ; Liquid temp. : 21.0 degrees
DASY4 Configuration:
- Probe: EX3DV3 - SN3504 ; ConvF(3.96, 3.96, 3.96) ; Calibrated: 2004/2/20
- Sensor-Surface: 2mm (Mechanical Surface Detection)
- Electronics: DAE3 Sn510; Calibrated: 2004/8/17
- Phantom: SAM 12; Type: SAM V4.0; Serial: TP 1202
- Measurement SW: DASY4, V4.4 Build 3; Postprocessing SW: SEMCAD, V1.8 Build 130

f:5800 Turbo Mode/Area Scan (10x12x1): Measurement grid: dx=10mm, dy=10mm
Maximum value of SAR (measured) = 0.935 mW/g

f:5800 Turbo Mode/Zoom Scan (8x8x9)/Cube 0: Measurement grid: dx=4.3mm, dy=4.3mm, dz=3mm
Reference Value = 13.5 V/m; Power Drift = -0.1 dB
Peak SAR (extrapolated) = 3.68 W/kg
SAR(1 g) = 0.232 mW/g; SAR(10 g) = 0.070 mW/g
Maximum value of SAR (measured) = 0.888 mW/g

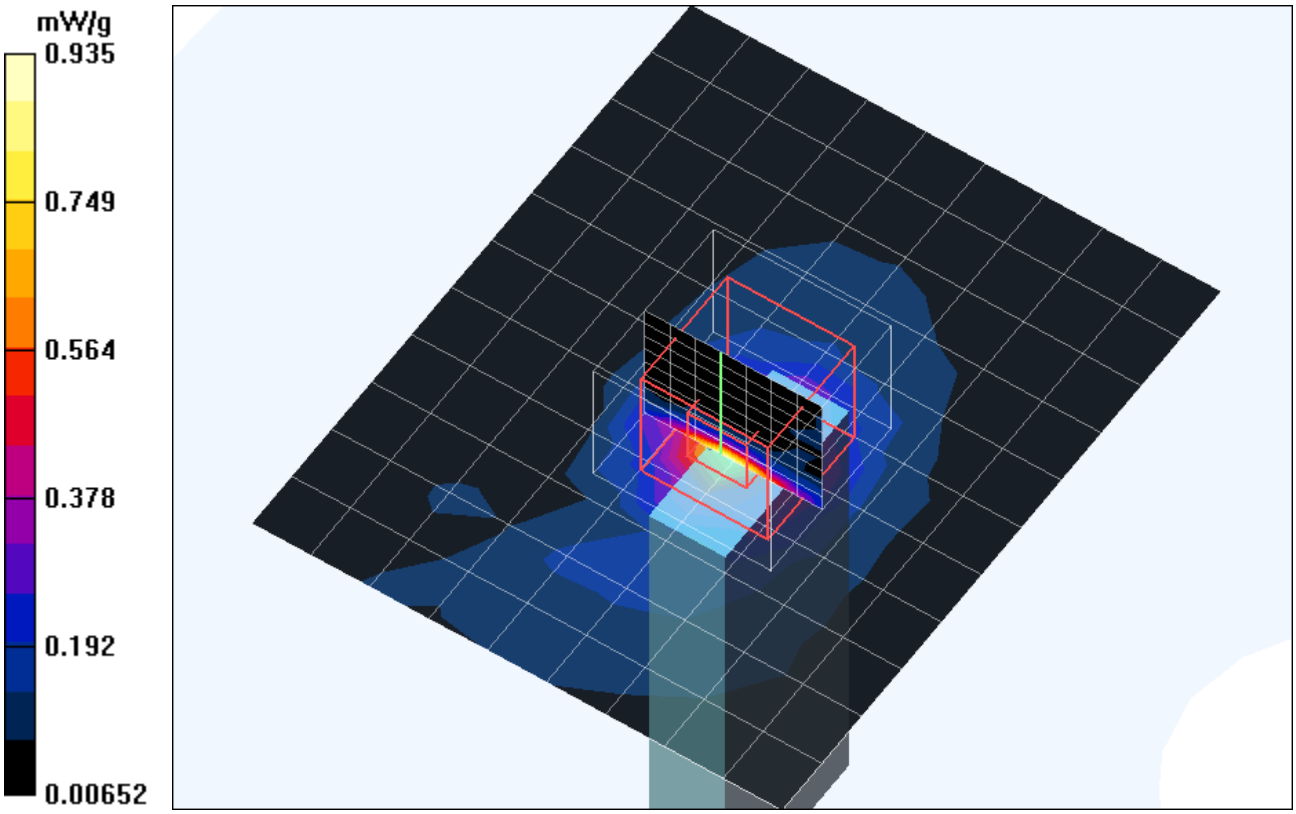

Date/Time: 11/02/04 10:43:32

Test Laboratory: Advance Data Technology

WL UD 2554 17A 11b Bottom Mode 5 Ch 1

DUT: 802.11 a+g Wireless USB Dongle ; Type: WL UD 2554 17A ; Test Channel Frequency: 2412 MHz

Communication System: 802.11b ; Frequency: 2412 MHz ; Duty Cycle: 1:1 ; Modulation type: CCK
Medium: MSL2450 Medium parameters used: f = 2412 MHz; σ = 1.98 mho/m; ε_r = 52.3; ρ = 1000 kg/m^3 ; Liquid level : 155mm
Phantom section: Flat Section ; Separation distance : 6 mm (The bottom side of the EUT to the Phantom)
Antenna type : Internal Antenna ; Air temp. : 22.0 degrees ; Liquid temp. : 21.0 degrees
DASY4 Configuration:
- Probe: ET3DV6 - SN1687 ; ConvF(4.23, 4.23, 4.23) ; Calibrated: 2004/8/26
- Sensor-Surface: 4mm (Mechanical Surface Detection)
- Electronics: DAE3 Sn510 ; Calibrated: 2004/8/17
- Phantom: SAM 12 ; Type: SAM V4.0 ; Serial: TP 1202
- Measurement SW: DASY4, V4.3 Build 22 ; Postprocessing SW: SEMCAD, V1.8 Build 127

Low Channel/Area Scan (5x8x1): Measurement grid: dx=15mm, dy=15mm
Maximum value of SAR (measured) = 0.338 mW/g

Low Channel/Zoon Scan (7x7x7)/Cube 0: Measurement grid: dx=5mm, dy=5mm, dz=5mm
Reference Value = 2.72 V/m; Power Drift = 0.1 dB
Peak SAR (extrapolated) = 0.468 W/kg
SAR(1 g) = 0.283 mW/g; SAR(10 g) = 0.155 mW/g
Maximum value of SAR (measured) = 0.310 mW/g

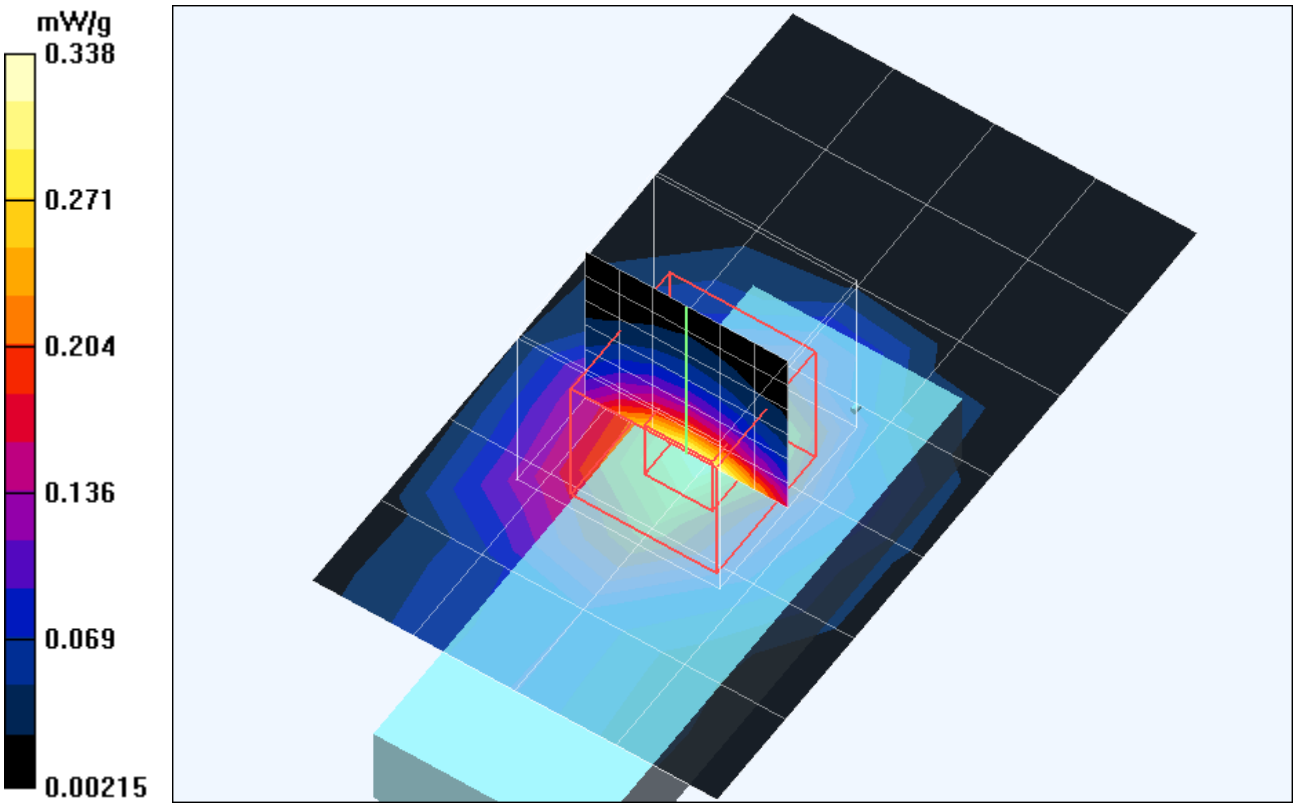

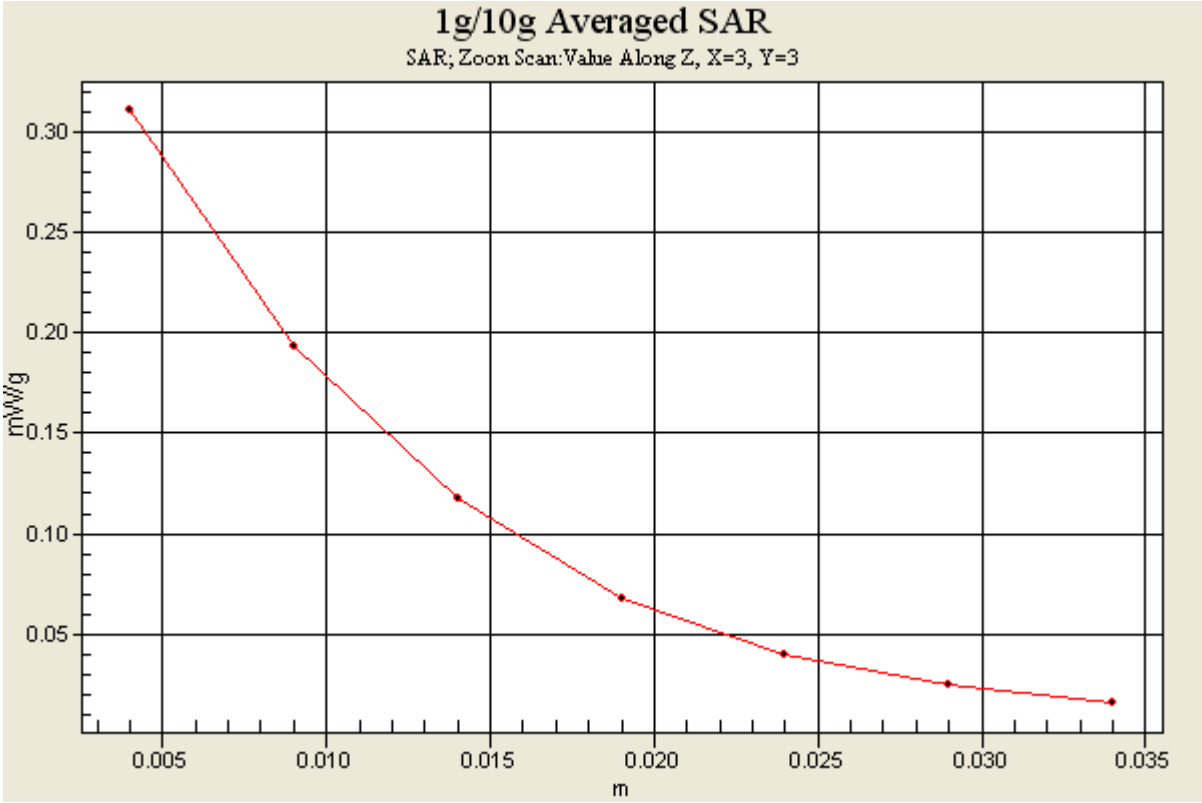
1g/10g Averaged SAR
SAR; Zoon Scan:Value Along Z, X=3, Y=3
mW/g
0.30
0.25
0.20
0.15
0.10
0.05
0.005
0.010
0.015
0.020
0.025
0.030
0.035
m

Date/Time: 11/02/04 11:01:49

Test Laboratory: Advance Data Technology

WL UD 2554 17A 11b Bottom Mode 5 Ch 6

DUT: 802.11 a+g Wireless USB Dongle ; Type: WL UD 2554 17A ; Test Channel Frequency: 2437 MHz

Communication System: 802.11b ; Frequency: 2437 MHz ; Duty Cycle: 1:1 ; Modulation type: CCK
Medium: MSL2450 Medium parameters used: f = 2437 MHz; σ = 2.02 mho/m; ε_r = 52.3; ρ = 1000 kg/m^3 ; Liquid level : 155mm
Phantom section: Flat Section ; Separation distance : 6 mm (The bottom side of the EUT to the Phantom)
Antenna type : Internal Antenna ; Air temp. : 22.0 degrees ; Liquid temp. : 21.0 degrees
DASY4 Configuration:
- Probe: ET3DV6 - SN1687 ; ConvF(4.23, 4.23, 4.23) ; Calibrated: 2004/8/26
- Sensor-Surface: 4mm (Mechanical Surface Detection)
- Electronics: DAE3 Sn510 ; Calibrated: 2004/8/17
- Phantom: SAM 12 ; Type: SAM V4.0 ; Serial: TP 1202
- Measurement SW: DASY4, V4.3 Build 22 ; Postprocessing SW: SEMCAD, V1.8 Build 127

Middle Channel/Area Scan (5x8x1): Measurement grid: dx=15mm, dy=15mm
Maximum value of SAR (measured) = 0.239 mW/g

Middle Channel/Zoon Scan (7x7x7)/Cube 0: Measurement grid: dx=5mm, dy=5mm, dz=5mm
Reference Value = 2.59 V/m; Power Drift = -0.2 dB
Peak SAR (extrapolated) = 0.367 W/kg
SAR(1 g) = 0.219 mW/g; SAR(10 g) = 0.119 mW/g
Maximum value of SAR (measured) = 0.242 mW/g

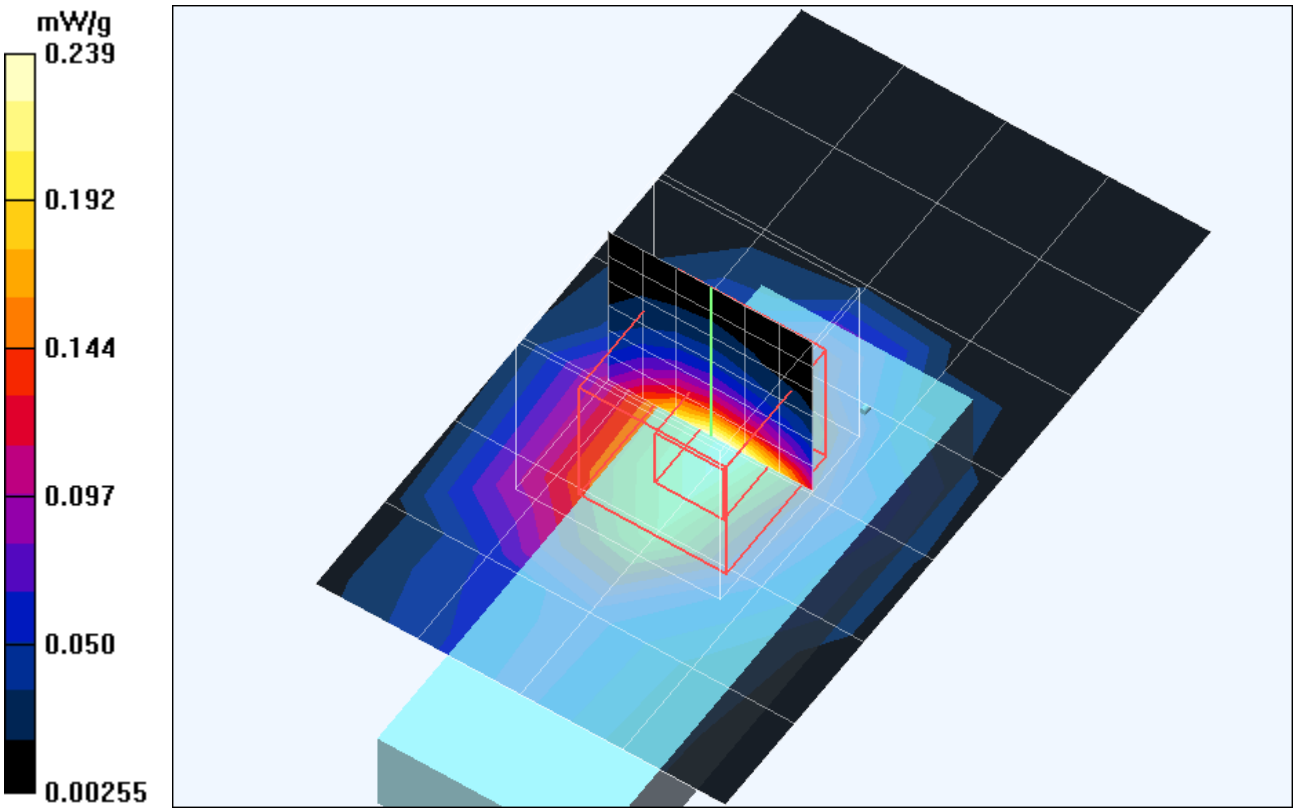

Date/Time: 11/02/04 11:19:20

Test Laboratory: Advance Data Technology

WL UD 2554 17A 11b Bottom Mode 5 Ch 11

DUT: 802.11 a+g Wireless USB Dongle ; Type: WL UD 2554 17A ; Test Channel Frequency: 2462 MHz

Communication System: 802.11b ; Frequency: 2462 MHz ; Duty Cycle: 1:1 ; Modulation type: CCK
Medium: MSL2450 Medium parameters used: f = 2462 MHz; σ = 2.05 mho/m; ε_r = 52.2; ρ = 1000 kg/m^3 ; Liquid level : 155mm
Phantom section: Flat Section ; Separation distance : 6 mm (The bottom side of the EUT to the Phantom)
Antenna type : Internal Antenna ; Air temp. : 22.0 degrees ; Liquid temp. : 21.0 degrees
DASY4 Configuration:
- Probe: ET3DV6 - SN1687 ; ConvF(4.23, 4.23, 4.23) ; Calibrated: 2004/8/26
- Sensor-Surface: 4mm (Mechanical Surface Detection)
- Electronics: DAE3 Sn510 ; Calibrated: 2004/8/17
- Phantom: SAM 12 ; Type: SAM V4.0 ; Serial: TP 1202
- Measurement SW: DASY4, V4.3 Build 22 ; Postprocessing SW: SEMCAD, V1.8 Build 127

High Channel/Area Scan (5x8x1): Measurement grid: dx=15mm, dy=15mm
Maximum value of SAR (measured) = 0.285 mW/g

High Channel/Zoon Scan (7x7x7)/Cube 0: Measurement grid: dx=5mm, dy=5mm, dz=5mm
Reference Value = 2.65 V/m; Power Drift = -0.1 dB
Peak SAR (extrapolated) = 0.423 W/kg
SAR(1 g) = 0.254 mW/g; SAR(10 g) = 0.138 mW/g
Maximum value of SAR (measured) = 0.282 mW/g

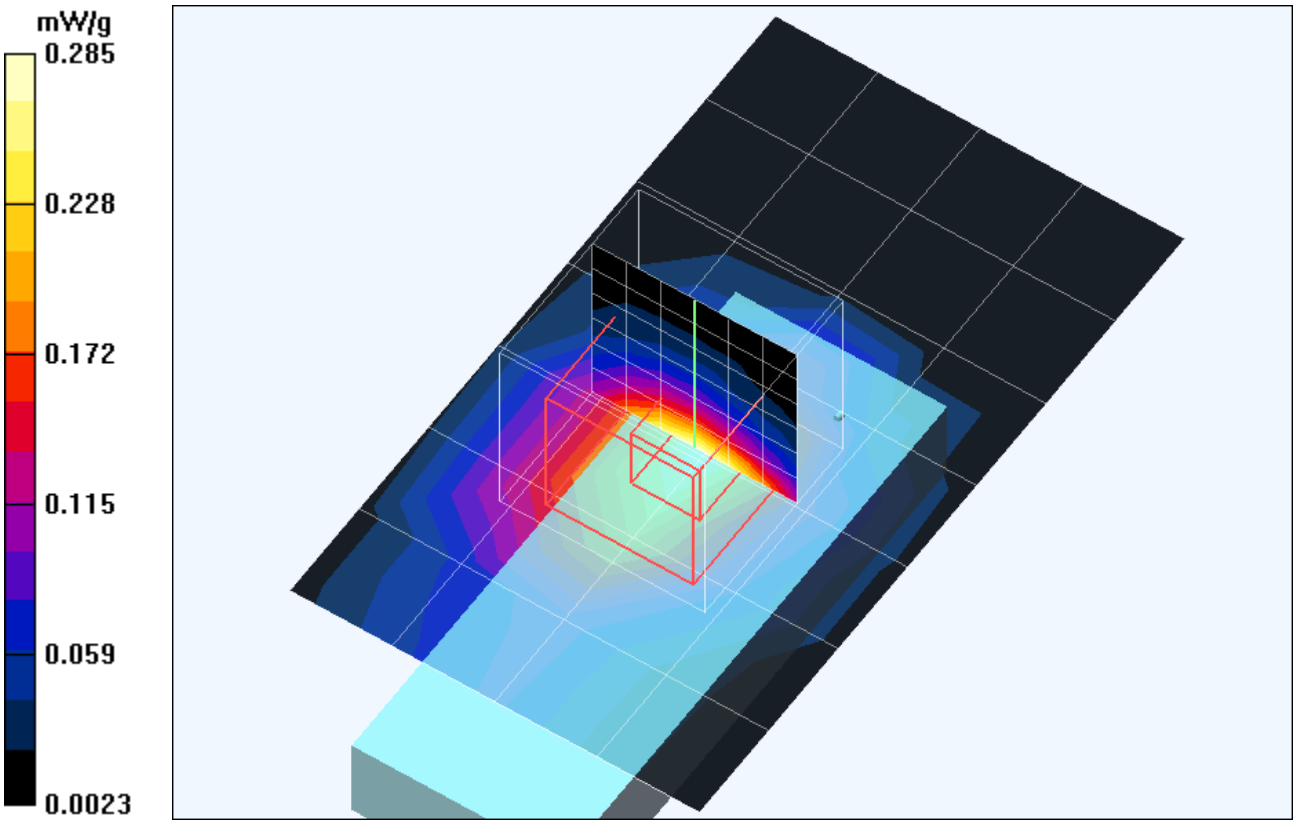

Date/Time: 11/02/04 17:23:15

Test Laboratory: Advance Data Technology

WL UD 2554 17A 11b Tip Mode 6 Ch 1

DUT: 802.11 a+g Wireless USB Dongle ; Type: WL UD 2554 17A ; Test Channel Frequency: 2412 MHz

Communication System: 802.11b ; Frequency: 2412 MHz; Duty Cycle: 1:1; Modulation type: CCK
Medium: MSL2450 Medium parameters used: f = 2412 MHz; σ = 1.98 mho/m; ε_r = 52.3; ρ = 1000 kg/m^3 ; Liquid level : 155 mm
Phantom section: Flat Section ; Separation distance : 0 mm (The tip of the EUT to the Phantom)
Antenna type : Internal Antenna ; Air temp. : 22.0 degrees ; Liquid temp. : 21.0 degrees
DASY4 Configuration:
- Probe: ET3DV6 - SN1687 ; ConvF(4.23, 4.23, 4.23) ; Calibrated: 2004/8/26
- Sensor-Surface: 4mm (Mechanical Surface Detection)
- Electronics: DAE3 Sn510; Calibrated: 2004/8/17
- Phantom: SAM 12; Type: SAM V4.0; Serial: TP 1202
- Measurement SW: DASY4, V4.3 Build 22; Postprocessing SW: SEMCAD, V1.8 Build 127

Low Channel/Area Scan (7x7x1): Measurement grid: dx=15mm, dy=15mm
Maximum value of SAR (measured) = 0.118 mW/g

Low Channel/Zoon Scan (7x7x7)/Cube 0: Measurement grid: dx=5mm, dy=5mm, dz=5mm
Reference Value = 7.94 V/m; Power Drift = -0.1 dB
Peak SAR (extrapolated) = 0.236 W/kg
SAR(1 g) = 0.103 mW/g; SAR(10 g) = 0.050 mW/g
Maximum value of SAR (measured) = 0.121 mW/g

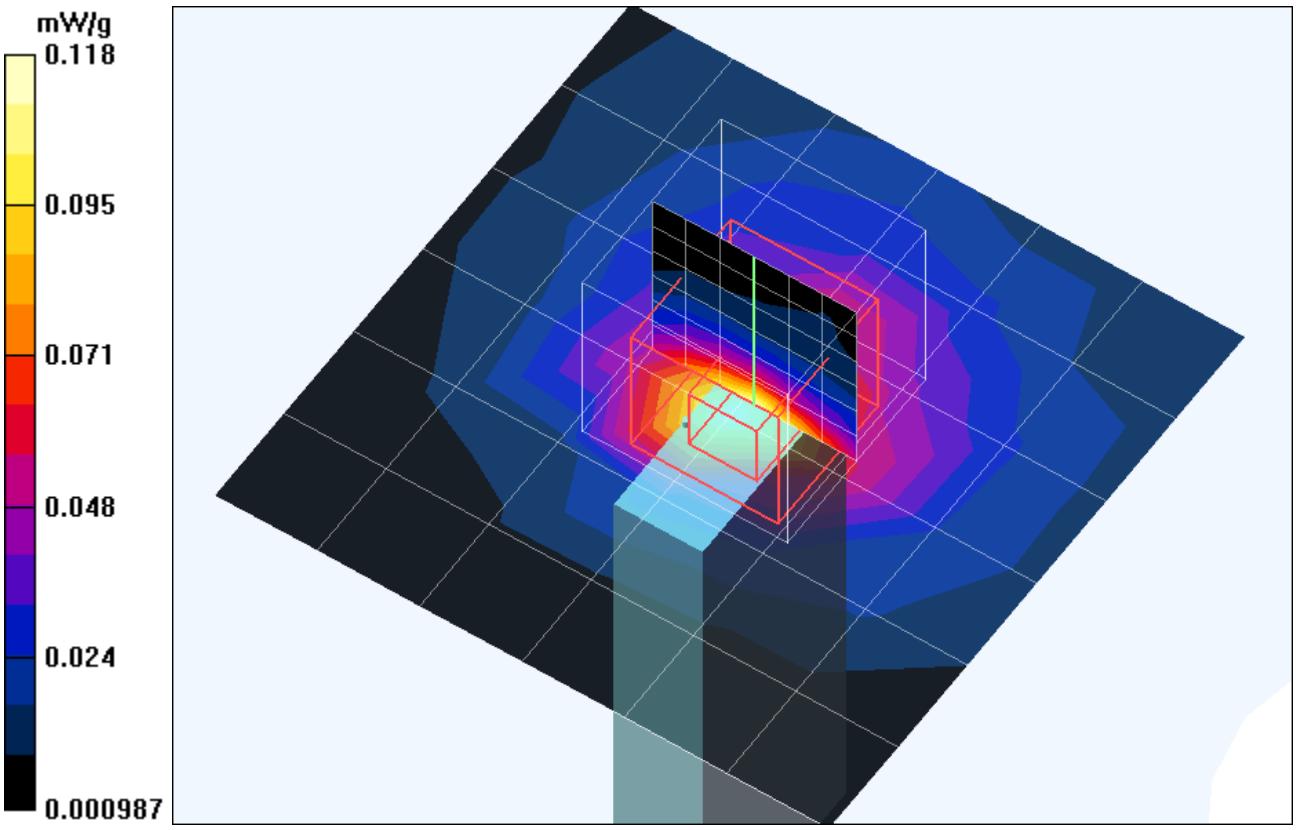

Date/Time: 11/02/04 17:44:23

Test Laboratory: Advance Data Technology

WL UD 2554 17A 11b Tip Mode 6 Ch 6

DUT: 802.11 a+g Wireless USB Dongle ; Type: WL UD 2554 17A ; Test Channel Frequency: 2437 MHz

Communication System: 802.11b ; Frequency: 2437 MHz; Duty Cycle: 1:1; Modulation type: CCK
Medium: MSL2450 Medium parameters used: f = 2437 MHz; σ = 2.02 mho/m; ε_r = 52.3; ρ = 1000 kg/m^3 ; Liquid level : 150 mm
Phantom section: Flat Section ; Separation distance : 0 mm (The tip of the EUT to the Phantom)
Antenna type : Internal Antenna ; Air temp. : 22.0 degrees ; Liquid temp. : 21.0 degrees
DASY4 Configuration:
- Probe: ET3DV6 - SN1687 ; ConvF(4.23, 4.23, 4.23) ; Calibrated: 2004/8/26
- Sensor-Surface: 4mm (Mechanical Surface Detection)
- Electronics: DAE3 Sn510; Calibrated: 2004/8/17
- Phantom: SAM 12; Type: SAM V4.0; Serial: TP 1202
- Measurement SW: DASY4, V4.3 Build 22; Postprocessing SW: SEMCAD, V1.8 Build 127

Middle Channel/Area Scan (7x7x1): Measurement grid: dx=15mm, dy=15mm
Maximum value of SAR (measured) = 0.103 mW/g

Middle Channel/Zoon Scan (7x7x7)/Cube 0: Measurement grid: dx=5mm, dy=5mm, dz=5mm
Reference Value = 7.11 V/m; Power Drift = -0.2 dB
Peak SAR (extrapolated) = 0.178 W/kg
SAR(1 g) = 0.084 mW/g; SAR(10 g) = 0.041 mW/g
Maximum value of SAR (measured) = 0.095 mW/g

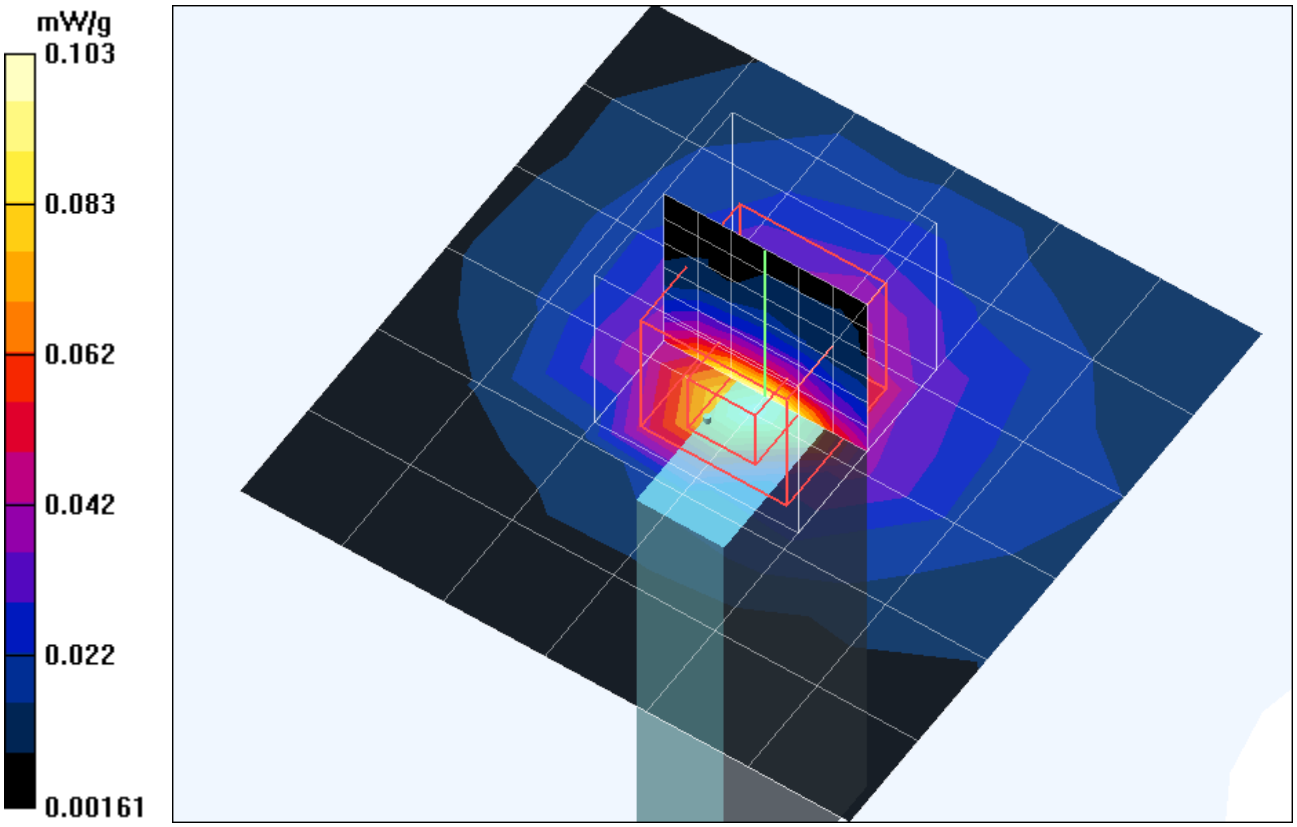

Date/Time: 11/02/04 18:13:41

Test Laboratory: Advance Data Technology

WL UD 2554 17A 11b Tip Mode 6 Ch 11

DUT: 802.11 a+g Wireless USB Dongle ; Type: WL UD 2554 17A ; Test Channel Frequency: 2462 MHz

Communication System: 802.11b ; Frequency: 2462 MHz; Duty Cycle: 1:1; Modulation type: CCK
Medium: MSL2450 Medium parameters used: f = 2462 MHz; σ = 2.05 mho/m; ε_r = 52.2; ρ = 1000 kg/m^3 ; Liquid level : 155 mm
Phantom section: Flat Section ; Separation distance : 0 mm (The tip of the EUT to the Phantom)
Antenna type : Internal Antenna ; Air temp. : 22.0 degrees ; Liquid temp. : 21.0 degrees
DASY4 Configuration:
- Probe: ET3DV6 - SN1687 ; ConvF(4.23, 4.23, 4.23) ; Calibrated: 2004/8/26
- Sensor-Surface: 4mm (Mechanical Surface Detection)
- Electronics: DAE3 Sn510; Calibrated: 2004/8/17
- Phantom: SAM 12; Type: SAM V4.0; Serial: TP 1202
- Measurement SW: DASY4, V4.3 Build 22; Postprocessing SW: SEMCAD, V1.8 Build 127

High Channel/Area Scan (7x7x1): Measurement grid: dx=15mm, dy=15mm
Maximum value of SAR (measured) = 0.103 mW/g

High Channel/Zoon Scan (7x7x7)/Cube 0: Measurement grid: dx=5mm, dy=5mm, dz=5mm
Reference Value = 7.32 V/m; Power Drift = -0.2 dB
Peak SAR (extrapolated) = 0.174 W/kg
SAR(1 g) = 0.087 mW/g; SAR(10 g) = 0.042 mW/g
Maximum value of SAR (measured) = 0.102 mW/g

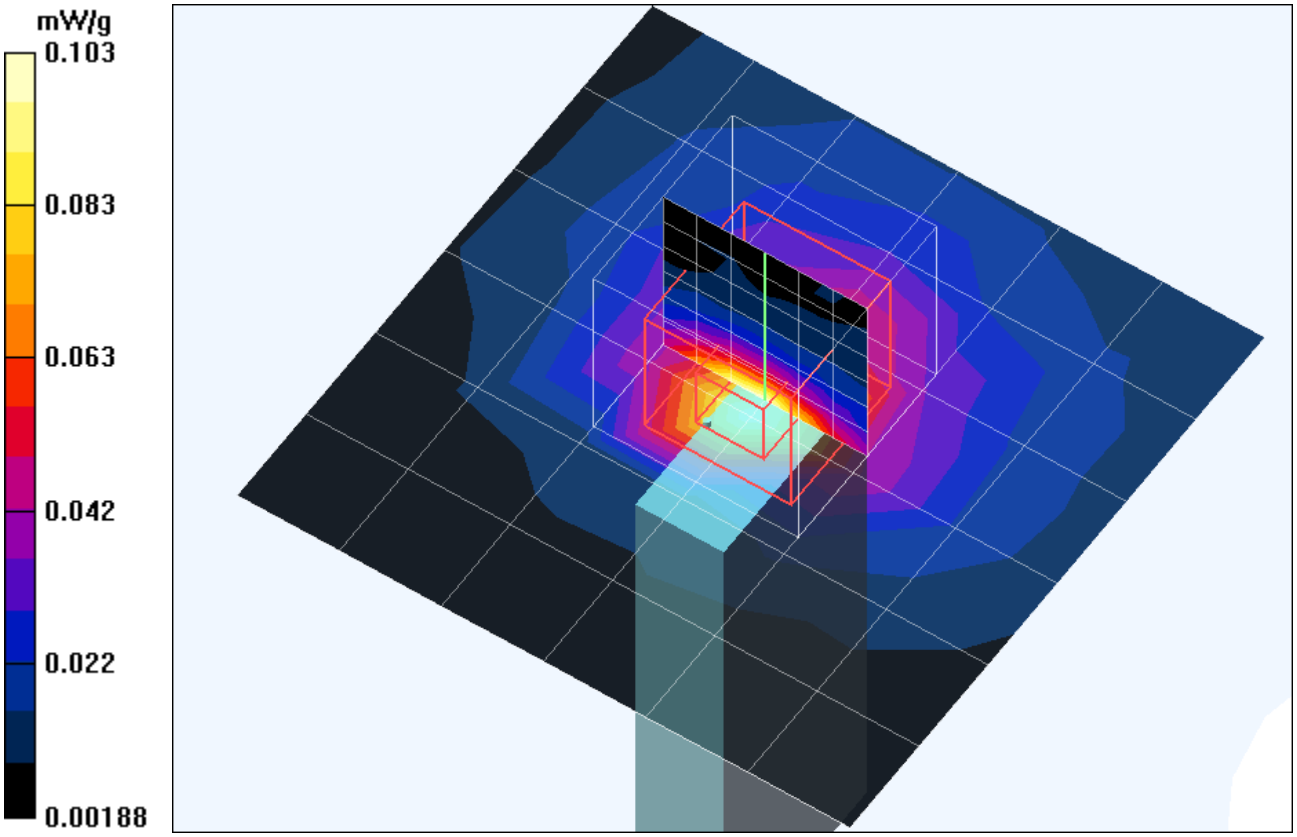

Date/Time: 11/02/04 11:40:39

Test Laboratory: Advance Data Technology

WL UD 2554 17A 11g Bottom Mode 7 Ch 1

DUT: 802.11 a+g Wireless USB Dongle ; Type: WL UD 2554 17A ; Test Channel Frequency: 2412 MHz

Communication System: 802.11g ; Frequency: 2412 MHz ; Duty Cycle: 1:1 ; Modulation type: OFDM
Medium: MSL2450 Medium parameters used: f = 2412 MHz; σ = 1.98 mho/m; ε_r = 52.3; ρ = 1000 kg/m^3 ; Liquid level : 155mm
Phantom section: Flat Section ; Separation distance : 6 mm (The bottom side of the EUT to the Phantom)
Antenna type : Internal Antenna ; Air temp. : 22.0 degrees ; Liquid temp. : 21.0 degrees
DASY4 Configuration:
- Probe: ET3DV6 - SN1687 ; ConvF(4.23, 4.23, 4.23) ; Calibrated: 2004/8/26
- Sensor-Surface: 4mm (Mechanical Surface Detection)
- Electronics: DAE3 Sn510 ; Calibrated: 2004/8/17
- Phantom: SAM 12 ; Type: SAM V4.0 ; Serial: TP 1202
- Measurement SW: DASY4, V4.3 Build 22 ; Postprocessing SW: SEMCAD, V1.8 Build 127

Low Channel/Area Scan (5x8x1): Measurement grid: dx=15mm, dy=15mm
Maximum value of SAR (measured) = 0.126 mW/g

Low Channel/Zoon Scan (7x7x7)/Cube 0: Measurement grid: dx=5mm, dy=5mm, dz=5mm
Reference Value = 2.94 V/m; Power Drift = 0.1 dB
Peak SAR (extrapolated) = 0.182 W/kg
SAR(1 g) = 0.111 mW/g; SAR(10 g) = 0.061 mW/g
Maximum value of SAR (measured) = 0.121 mW/g

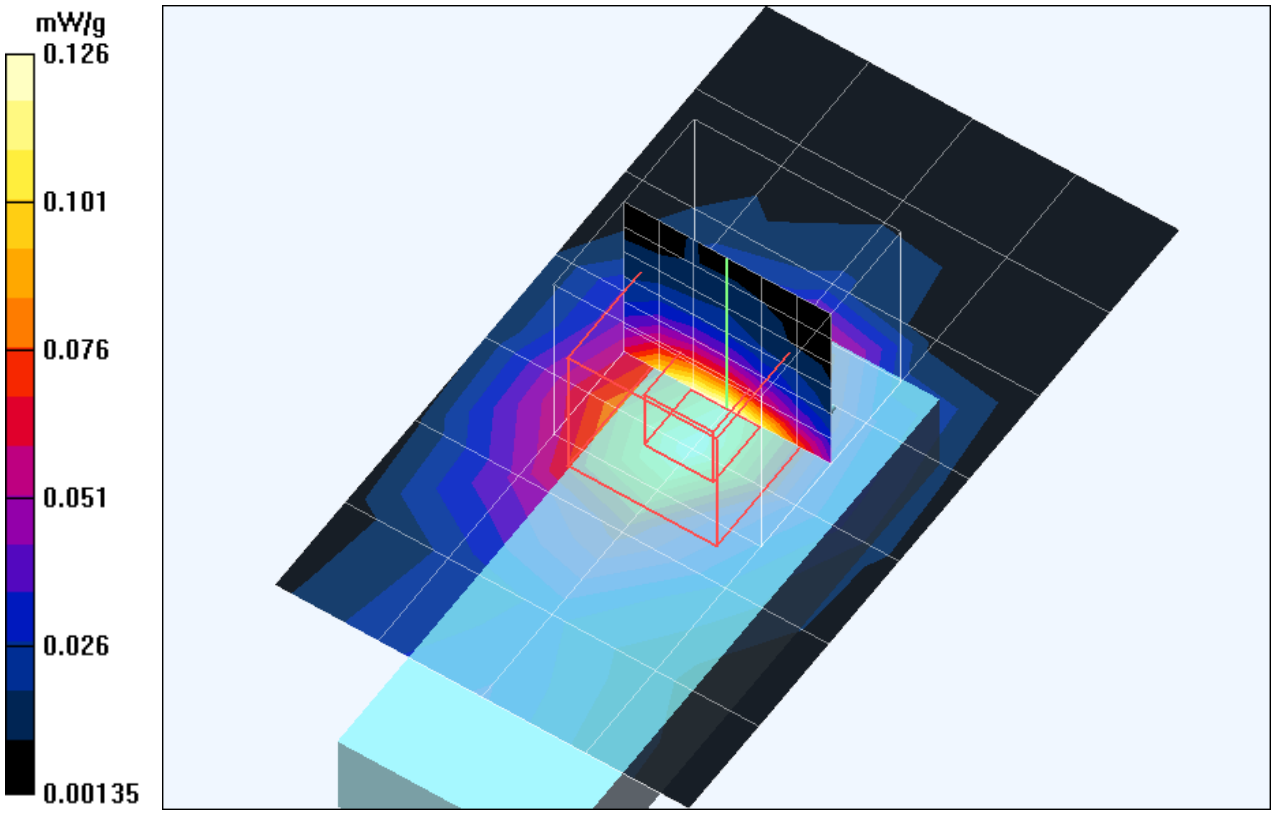

A3 : SYSTEM VALIDATION

Date/Time: 11/04/04 13:39:46

Test Laboratory: Advance Data Technology

System Validation Check-MSL 5200MHz

DUT: Dipole 5 GHz ; Type: D5GHzV2 ; Serial: 1019 ; Test Frequency: 5200 MHz

Communication System: CW ; Frequency: 5200 MHz; Duty Cycle: 1:1; Modulation type: CW
Medium: MSL5800;Medium parameters used: f = 5200 MHz; σ = 5.37 mho/m; ε_r = 47.5; ρ = 1000 kg/m^3 ; Liquid level : 150mm
Phantom section: Flat Section ; Separation distance : 10 mm (The feetpoint of the dipole to the Phantom)Air temp. : 22.0 degrees ; Liquid temp. : 21.0 degrees
DASY4 Configuration:
- Probe: EX3DV3 - SN3504 ; ConvF(4.29, 4.29, 4.29) ; Calibrated: 2004/2/20
- Sensor-Surface: 2.5mm (Mechanical Surface Detection)
- Electronics: DAE3 Sn510; Calibrated: 2004/8/17
- Phantom: SAM 12; Type: SAM V4.0; Serial: TP 1202
- Measurement SW: DASY4, V4.3 Build 22; Postprocessing SW: SEMCAD, V1.8 Build 127

f=5200, d=10mm, Pin=250mW/Area Scan (6x6x1): Measurement grid: dx=10mm, dy=10mm
Maximum value of SAR (measured) = 26.2 mW/g

f=5200, d=10mm, Pin=250mW/Zoom Scan (8x8x8)/Cube 0: Measurement grid: dx=4.3mm, dy=4.3mm, dz=3mm
Reference Value = 88.1 V/m; Power Drift = -0.2 dB
Peak SAR (extrapolated) = 73.7 W/kg
SAR(1 g) = 20.6 mW/g; SAR(10 g) = 5.72 mW/g
Maximum value of SAR (measured) = 36.9 mW/g

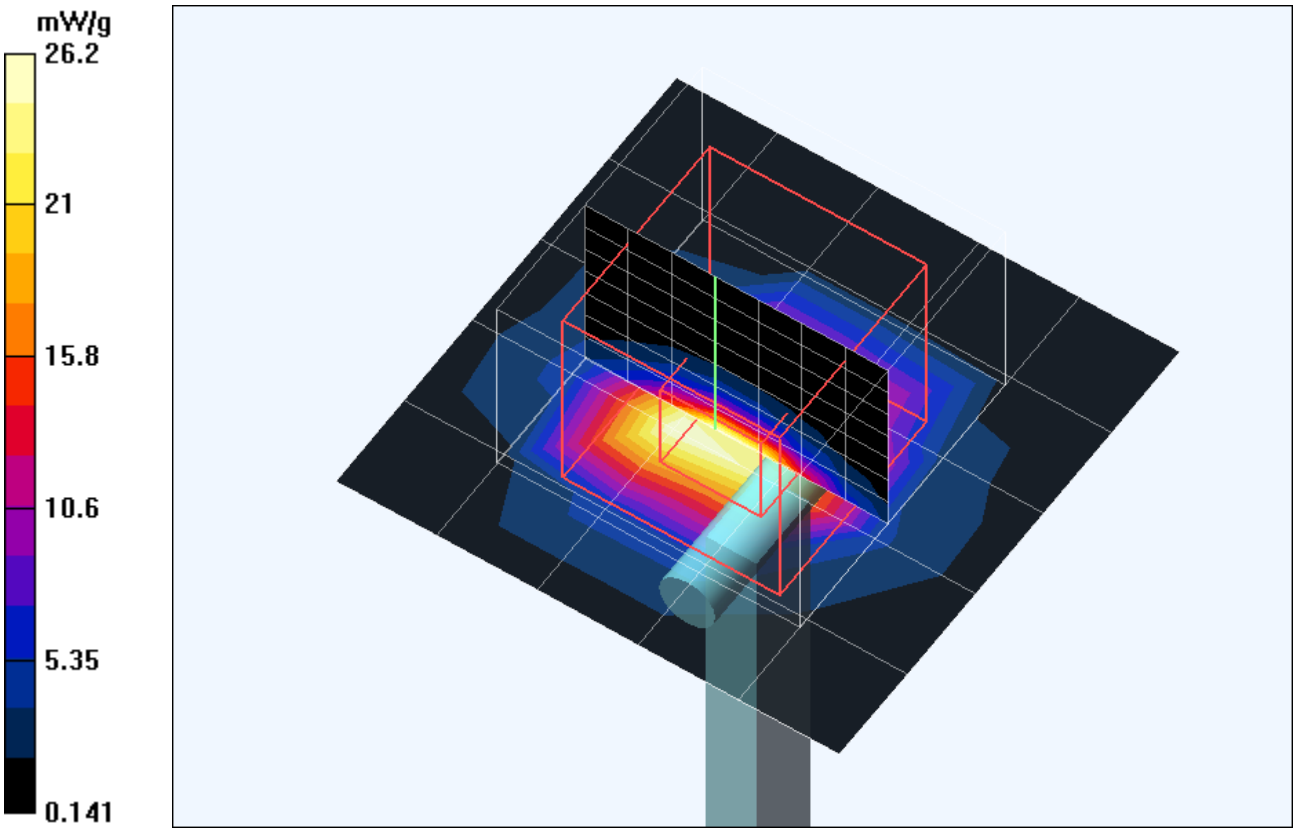

Date/Time: 11/04/04 13:39:46

Test Laboratory: Advance Data Technology

System Validation Check-MSL 5800MHz

DUT: Dipole 5 GHz ; Type: D5GHzV2 ; Serial: 1019 ; Test Frequency: 5800 MHz

Communication System: CW ; Frequency: 5800 MHz; Duty Cycle: 1:1; Modulation type: CW
Medium: MSL5800;Medium parameters used: f = 5800 MHz; σ = 6.21 mho/m; ε_r = 46.4; ρ = 1000 kg/m^3 ; Liquid level : 150mm
Phantom section: Flat Section ; Separation distance : 10 mm (The feetpoint of the dipole to the Phantom)Air temp. : 22.0 degrees ; Liquid temp. : 21.0 degrees
DASY4 Configuration:
- Probe: EX3DV3 - SN3504 ; ConvF(3.96, 3.96, 3.96) ; Calibrated: 2004/2/20
- Sensor-Surface: 2.5mm (Mechanical Surface Detection)
- Electronics: DAE3 Sn510; Calibrated: 2004/8/17
- Phantom: SAM 12; Type: SAM V4.0; Serial: TP 1202
- Measurement SW: DASY4, V4.3 Build 22; Postprocessing SW: SEMCAD, V1.8 Build 127

f=5800, d=10mm, Pin=250mW/Area Scan (6x6x1): Measurement grid: dx=10mm, dy=10mm
Maximum value of SAR (measured) = 23.4 mW/g

f=5800, d=10mm, Pin=250mW/Zoom Scan (8x8x8)/Cube 0: Measurement grid: dx=4.3mm, dy=4.3mm, dz=3mm
Reference Value = 76.3 V/m; Power Drift = 0.0 dB
Peak SAR (extrapolated) = 79.7 W/kg
SAR(1 g) = 18.5 mW/g; SAR(10 g) = 5.07 mW/g
Maximum value of SAR (measured) = 31.6 mW/g

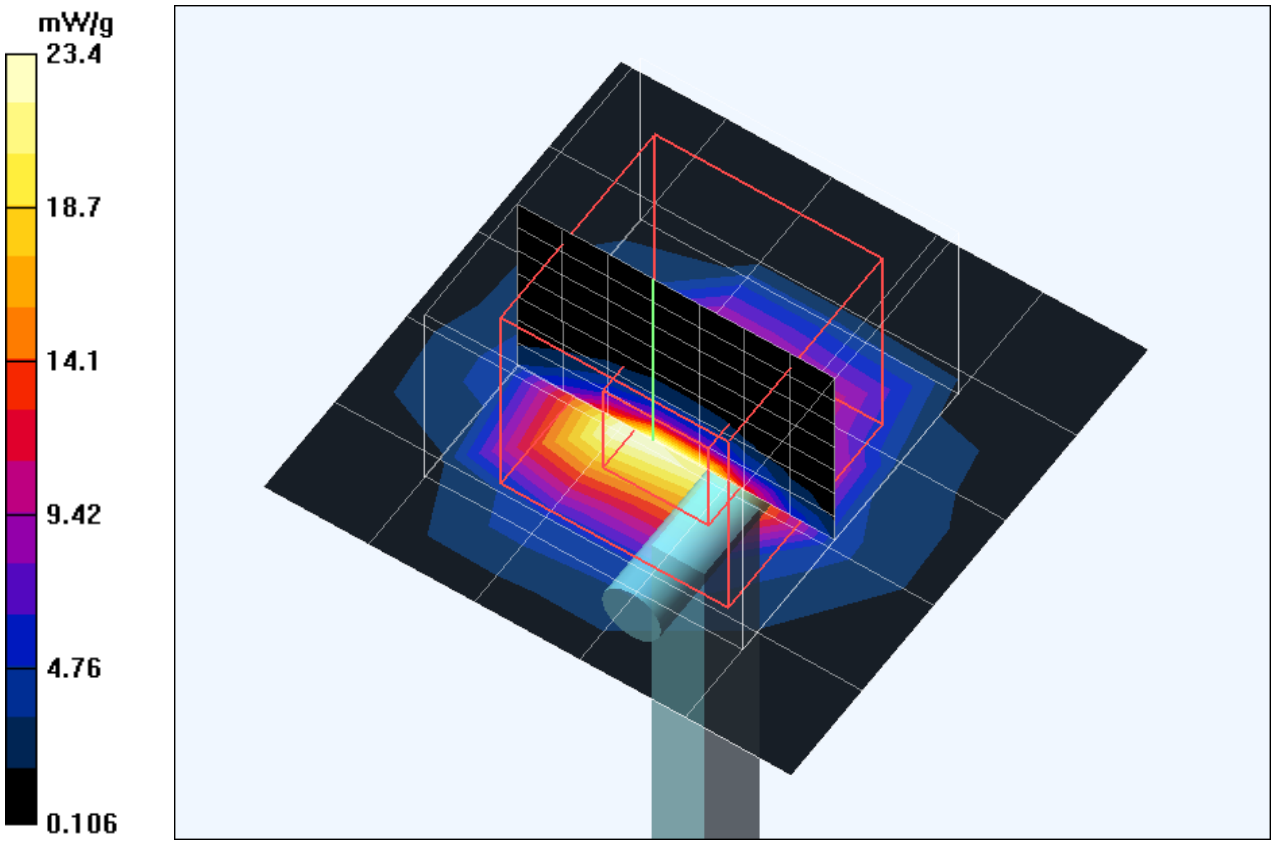

Date/Time: 12/20/04 10:04:23

Test Laboratory: Advance Data Technology

System Validation Check-MSL 5200MHz

DUT: Dipole 5 GHz ; Type: D5GHzV2 ; Serial: 1019 ; Test Frequency: 5200 MHz

Communication System: CW ; Frequency: 5200 MHz; Duty Cycle: 1:1; Modulation type: CW
Medium: MSL5800;Medium parameters used: f = 5200 MHz; σ = 5.35 mho/m; ε_r = 47.5; ρ = 1000 kg/m^3 ; Liquid level : 150mm
Phantom section: Flat Section ; Separation distance : 10 mm (The feetpoint of the dipole to the Phantom)Air temp. : 22.0 degrees ; Liquid temp. : 21.0 degrees
DASY4 Configuration:
- Probe: EX3DV3 - SN3504 ; ConvF(4.29, 4.29, 4.29) ; Calibrated: 2004/2/20
- Sensor-Surface: 2.5mm (Mechanical Surface Detection)
- Electronics: DAE3 Sn510; Calibrated: 2004/8/17
- Phantom: SAM 12; Type: SAM V4.0; Serial: TP 1202
- Measurement SW: DASY4, V4.4 Build 3; Postprocessing SW: SEMCAD, V1.8 Build 130

f=5200, d=10mm, Pin=250mW/Area Scan (6x6x1): Measurement grid: dx=10mm, dy=10mm
Maximum value of SAR (measured) = 23.4 mW/g

f=5200, d=10mm, Pin=250mW/Zoom Scan (8x8x8)/Cube 0: Measurement grid: dx=4.3mm, dy=4.3mm, dz=3mm
Reference Value = 88.3 V/m; Power Drift = -0.1 dB
Peak SAR (extrapolated) = 74.3 W/kg
SAR(1 g) = 20.6 mW/g; SAR(10 g) = 5.7 mW/g
Maximum value of SAR (measured) = 34.6 mW/g

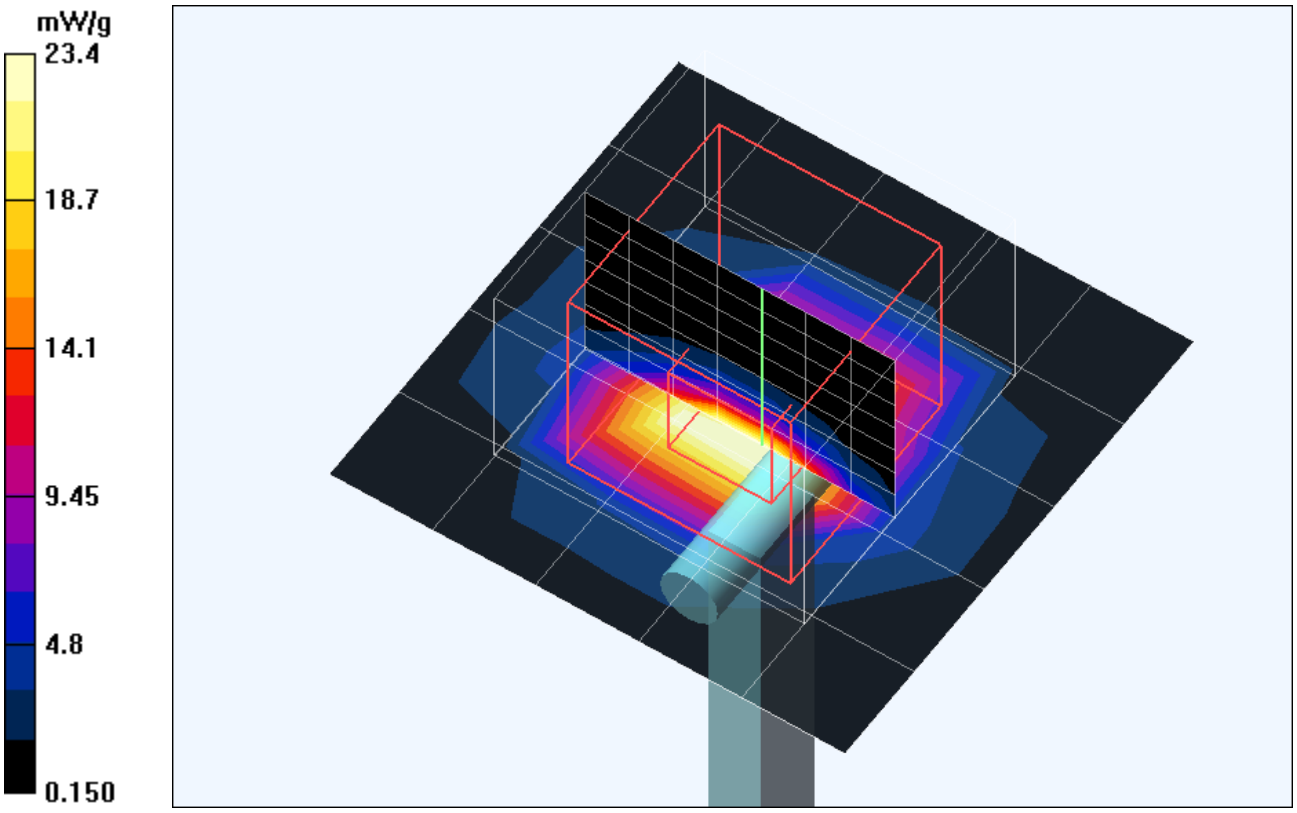

Date/Time: 12/20/04 10:42:40

Test Laboratory: Advance Data Technology

System Validation Check-MSL 5800MHz

DUT: Dipole 5 GHz ; Type: D5GHzV2 ; Serial: 1019 ; Test Frequency: 5800 MHz

Communication System: CW ; Frequency: 5800 MHz; Duty Cycle: 1:1; Modulation type: CW
Medium: MSL5800;Medium parameters used: f = 5800 MHz; σ = 6.22 mho/m; ε_r = 46.3; ρ = 1000 kg/m^3 ; Liquid level : 150mm
Phantom section: Flat Section ; Separation distance : 10 mm (The feetpoint of the dipole to the Phantom)Air temp. : 22.0 degrees ; Liquid temp. : 21.0 degrees
DASY4 Configuration:
- Probe: EX3DV3 - SN3504 ; ConvF(3.96, 3.96, 3.96) ; Calibrated: 2004/2/20
- Sensor-Surface: 2.5mm (Mechanical Surface Detection)
- Electronics: DAE3 Sn510; Calibrated: 2004/8/17
- Phantom: SAM 12; Type: SAM V4.0; Serial: TP 1202
- Measurement SW: DASY4, V4.4 Build 3; Postprocessing SW: SEMCAD, V1.8 Build 130

f=5800, d=10mm, Pin=250mW/Area Scan (6x6x1): Measurement grid: dx=10mm, dy=10mm
Maximum value of SAR (measured) = 21.9 mW/g

f=5800, d=10mm, Pin=250mW/Zoom Scan (8x8x8)/Cube 0: Measurement grid: dx=4.3mm, dy=4.3mm, dz=3mm
Reference Value = 78.2 V/m; Power Drift = -0.0 dB
Peak SAR (extrapolated) = 82.1 W/kg
SAR(1 g) = 18.9 mW/g; SAR(10 g) = 5.25 mW/g
Maximum value of SAR (measured) = 32.1 mW/g

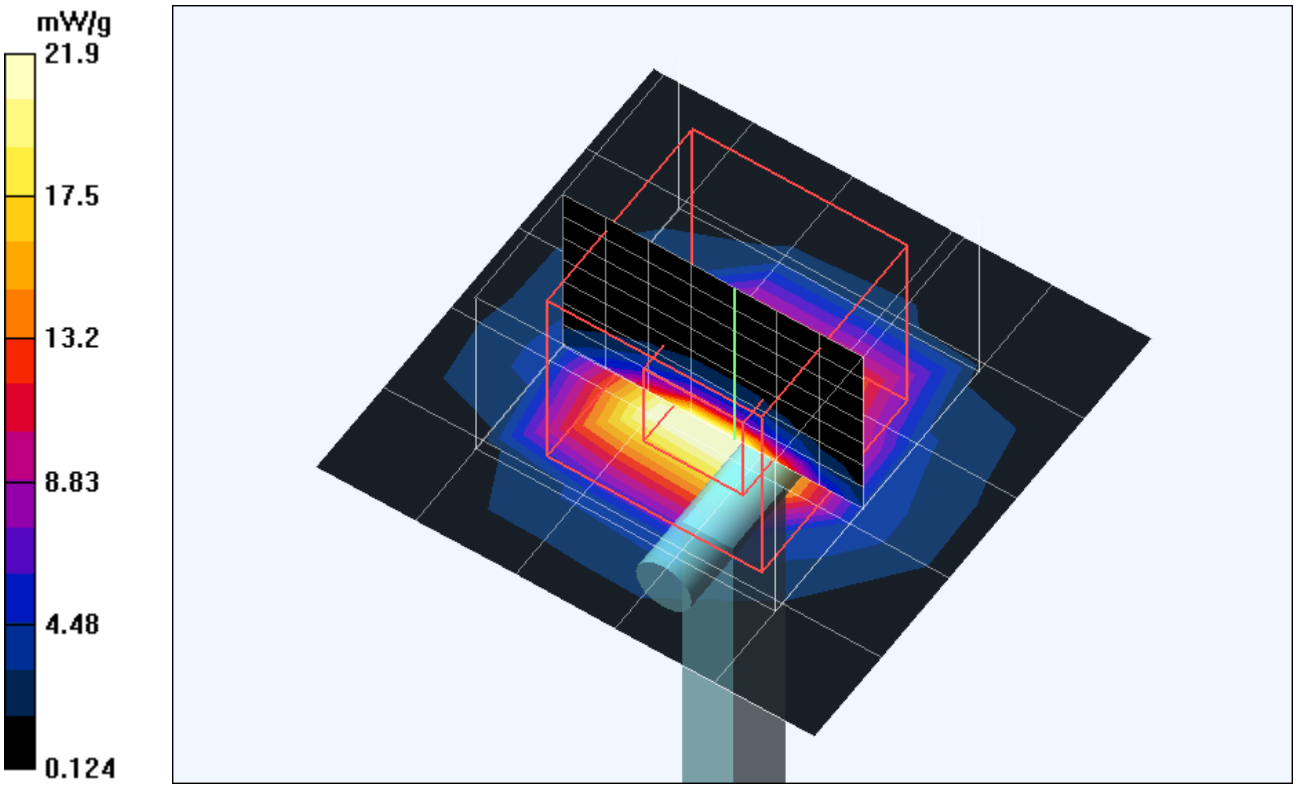

Date/Time: 11/02/04 10:06:08

Test Laboratory: Advance Data Technology

System Validation Check-MSL 2450MHz

DUT: Dipole 2450 MHz ; Type: D2450V2 ; Serial: 716 ; Test Channel Frequency: 2450 MHz

Communication System: CW ; Frequency: 2450 MHz; Duty Cycle: 1:1; Modulation type: CW
Medium: MSL2450;Medium parameters used: f = 2450 MHz; σ = 2.03 mho/m; ε_r = 52.2; ρ = 1000 kg/m^3 ; Liquid level : 155mm
Phantom section: Flat Section ; Separation distance : 10 mm (The feetpoint of the dipole to the Phantom)Air temp. : 22.0 degrees ; Liquid temp. : 21.0 degrees
DASY4 Configuration:
- Probe: ET3DV6 - SN1687 ; ConvF(4.23, 4.23, 4.23) ; Calibrated: 2004/8/26
- Sensor-Surface: 4mm (Mechanical Surface Detection)
- Electronics: DAE3 Sn510; Calibrated: 2004/8/17
- Phantom: SAM 12; Type: SAM V4.0; Serial: TP 1202
- Measurement SW: DASY4, V4.3 Build 22; Postprocessing SW: SEMCAD, V1.8 Build 127

d=10mm, Pin=250mW/Area Scan (5x6x1): Measurement grid: dx=15mm, dy=15mm
Maximum value of SAR (measured) = 12.4 mW/g

d=10mm, Pin=250mW/Zoom Scan (7x7x7)/Cube 0: Measurement grid: dx=5mm, dy=5mm, dz=5mm
Reference Value = 82.6 V/m; Power Drift = -0.2 dB
Peak SAR (extrapolated) = 21.2 W/kg
SAR(1 g) = 11.5 mW/g; SAR(10 g) = 5.54 mW/g
Maximum value of SAR (measured) = 13.4 mW/g

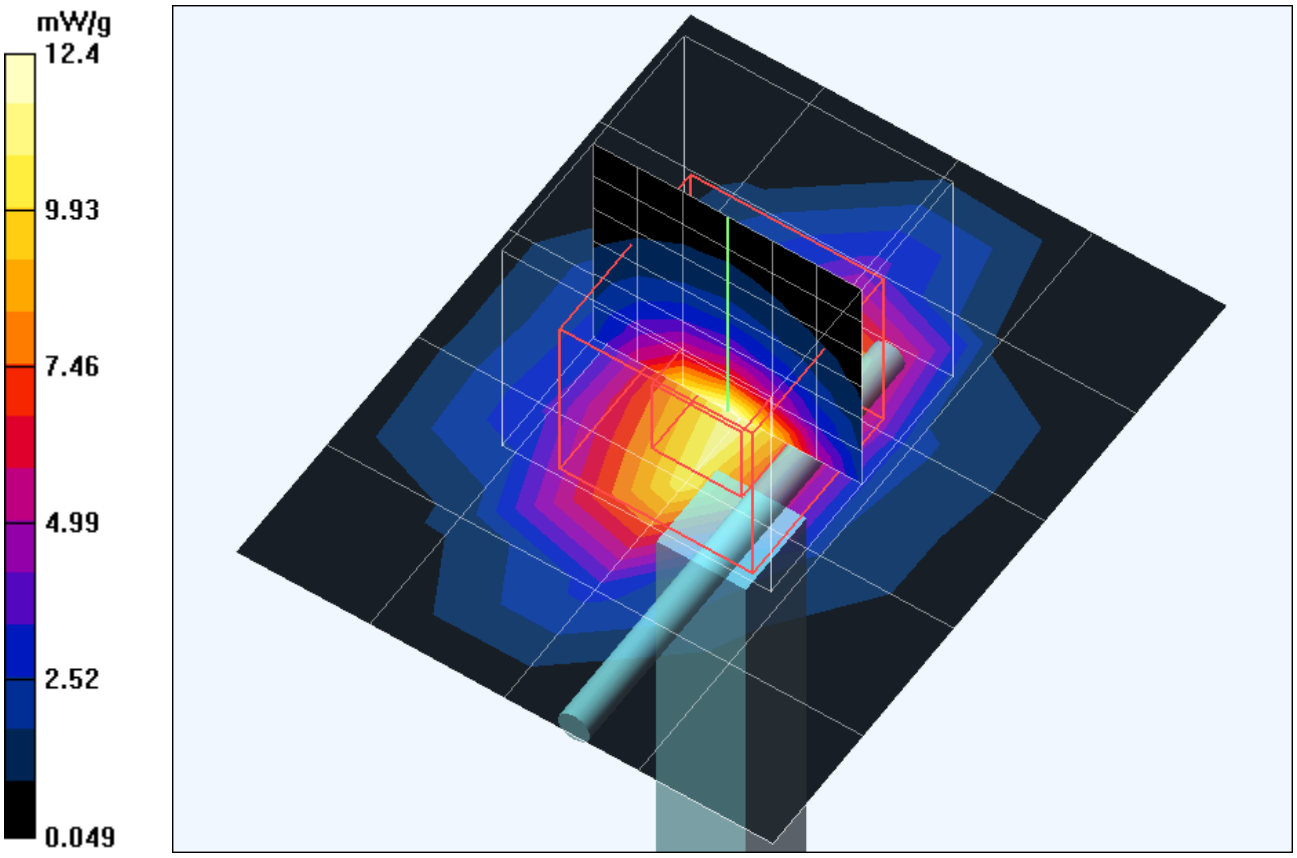

APPENDIX B : ADT SAR MEASUREMENT SYSTEM

APPENDIX C: PHOTOGRAPHS OF SYSTEM VALIDATION

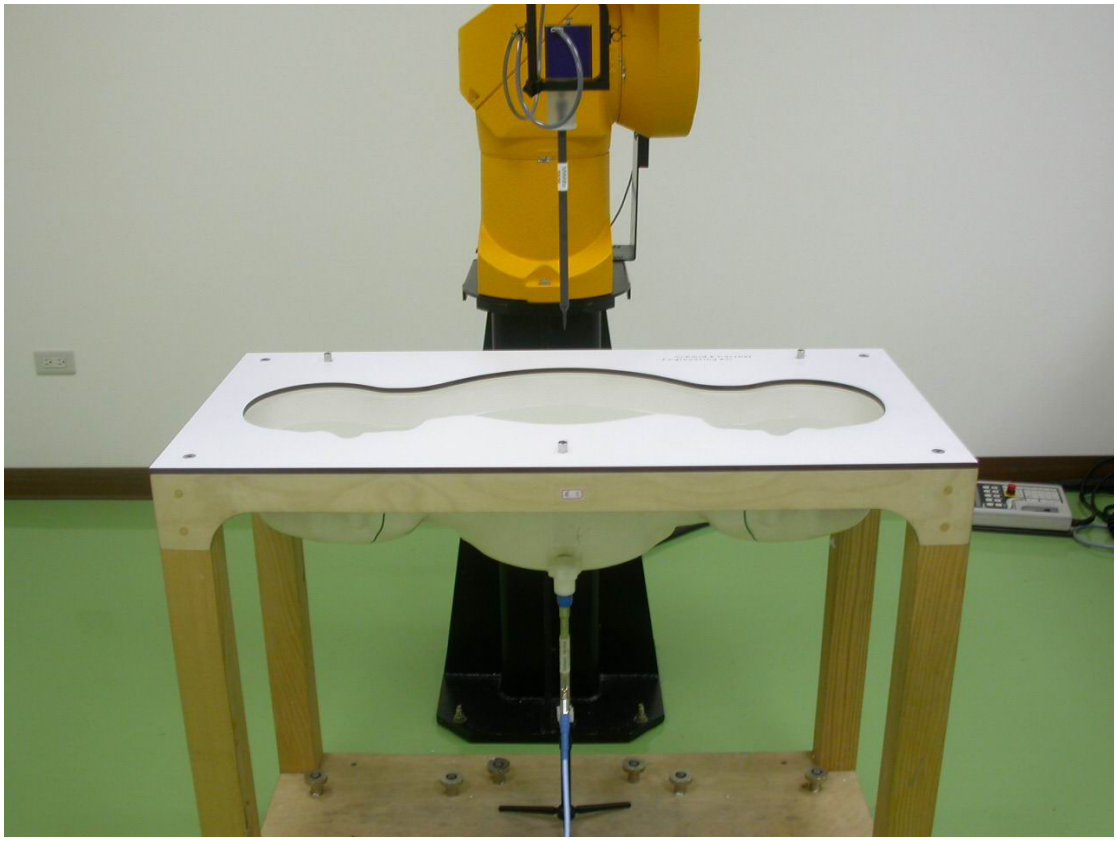

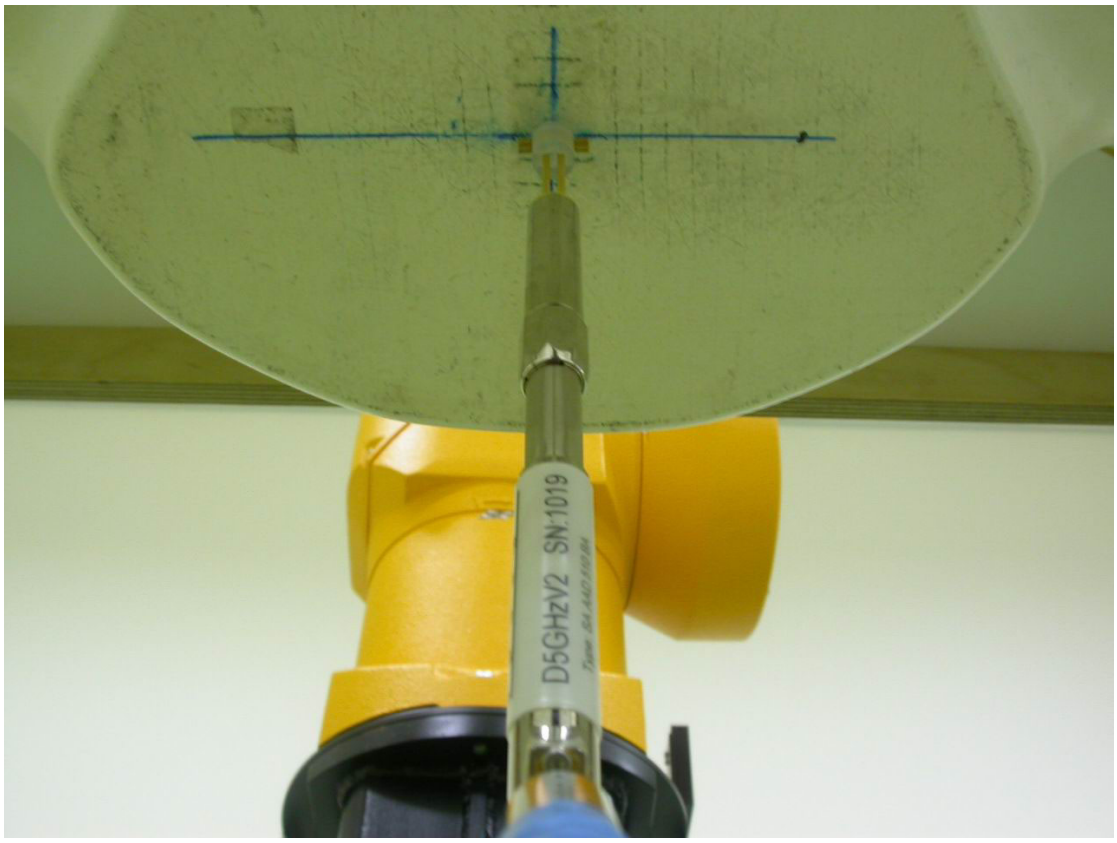

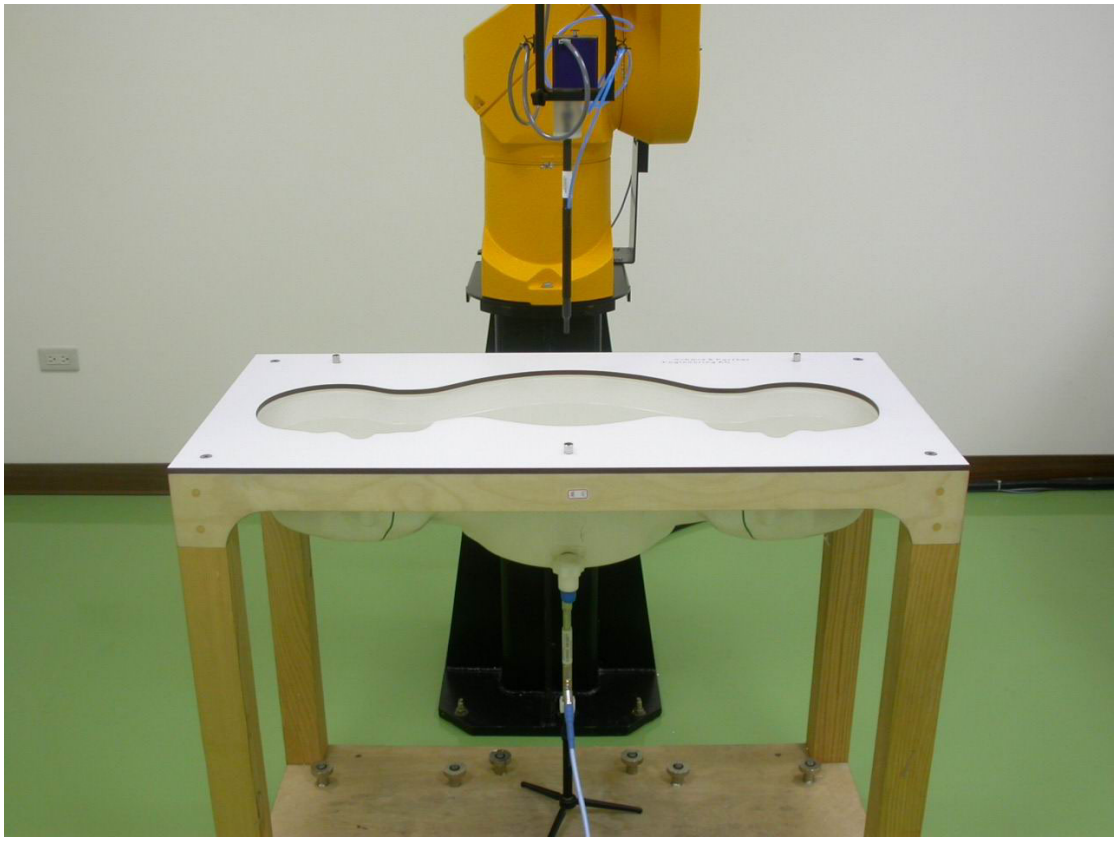

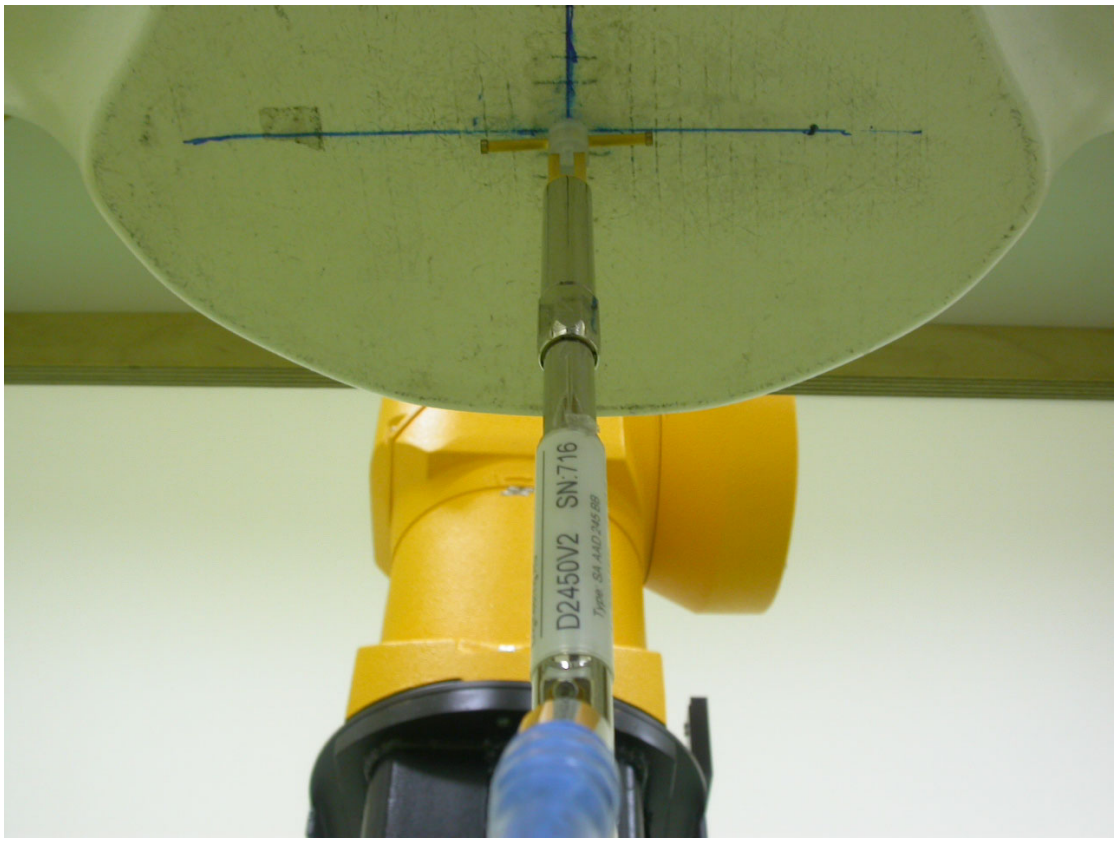
D2450V2 SN:716