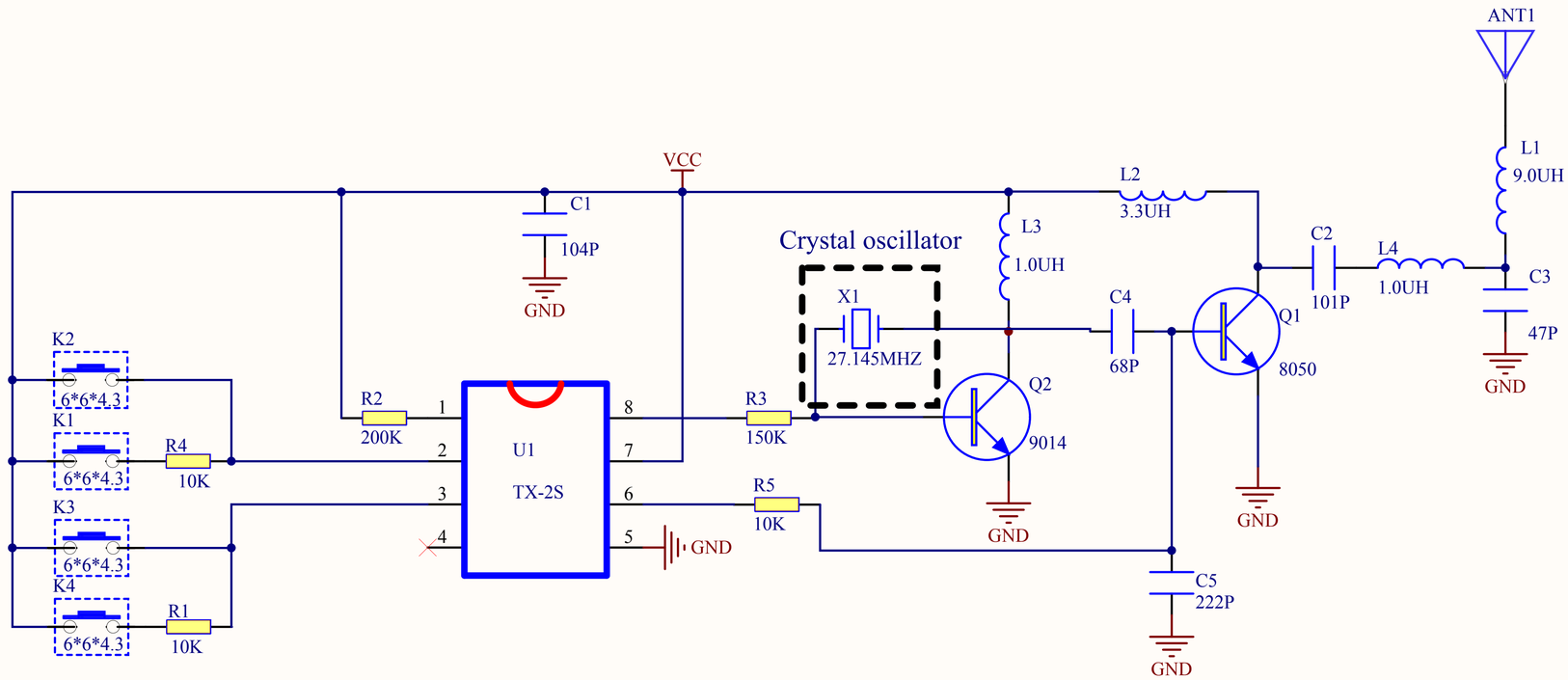

Title	JG-648T 27.145MHz	
Size A4	Number	Revision
Date: 2018/8/11		Sheet of
File: E:\2017 PCB \..\ .SCHDOC		Drawn By: