7. Smartphone App

7.1 App Installation

- Android smartphone users: go to Google Play to download the ENTR® application. System requirements: Android 4.4
- iOS (iPhone/iPad) users: go to the app store to download the ENTR® application. System requirements: iOS 7.0 or higher.
- Bluetooth low-energy compliant.

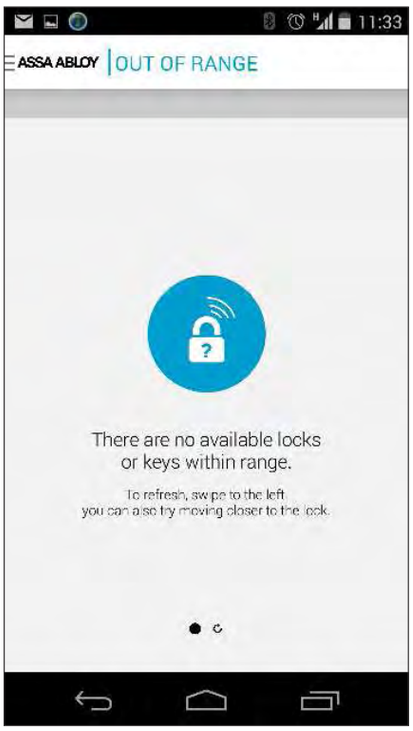

The below message will be displayed when opening the ENTR® app prior to pairing it with your lock:
"There are no available locks or keys within range".

7.2 Pairing a Smartphone

This procedure is done via the ENTR® lock door unit.

1

Touch the **Door Unit** screen with your palm or fingers for 3 seconds to activate.

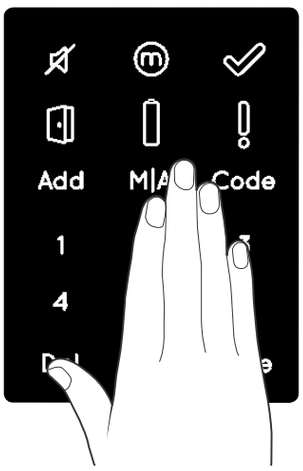

2

Press **[Add]**

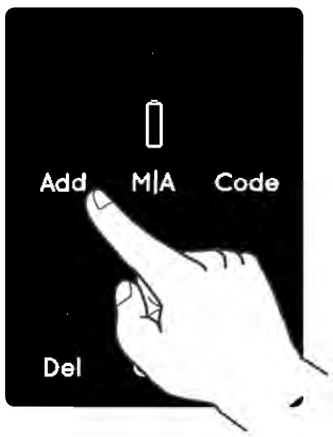

3

Numeric buttons illuminate.
Type **[PIN Code]** ➡ **[#]**
Numeric buttons blink.

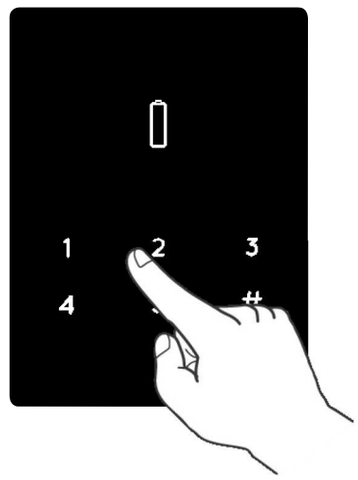

4

Press **[2]** to add a smartphone.
[OK] indication blinks for 3 seconds.
Illuminated buttons turn off,
ENTR® will be visible for 5 min.

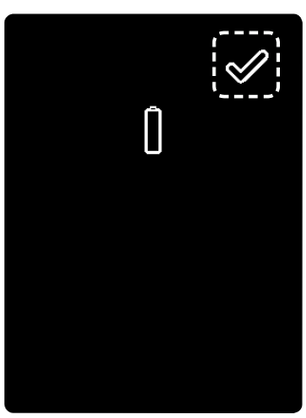

Open the ENTR® app and follow the steps described in order to pair the smartphone with the ENTR® lock.

- Please pay attention that only one phone can be connected to the lock at the same time.
- A phone can have only one eKey per each lock.

ENTR® App User Manual is available for download at: **www.entrlock.com**

8. Remote Control Battery Change

8.1 Battery Removal

a. Release the lid by safely inserting a small tool into the notch (1), and press the lid clasp (2).

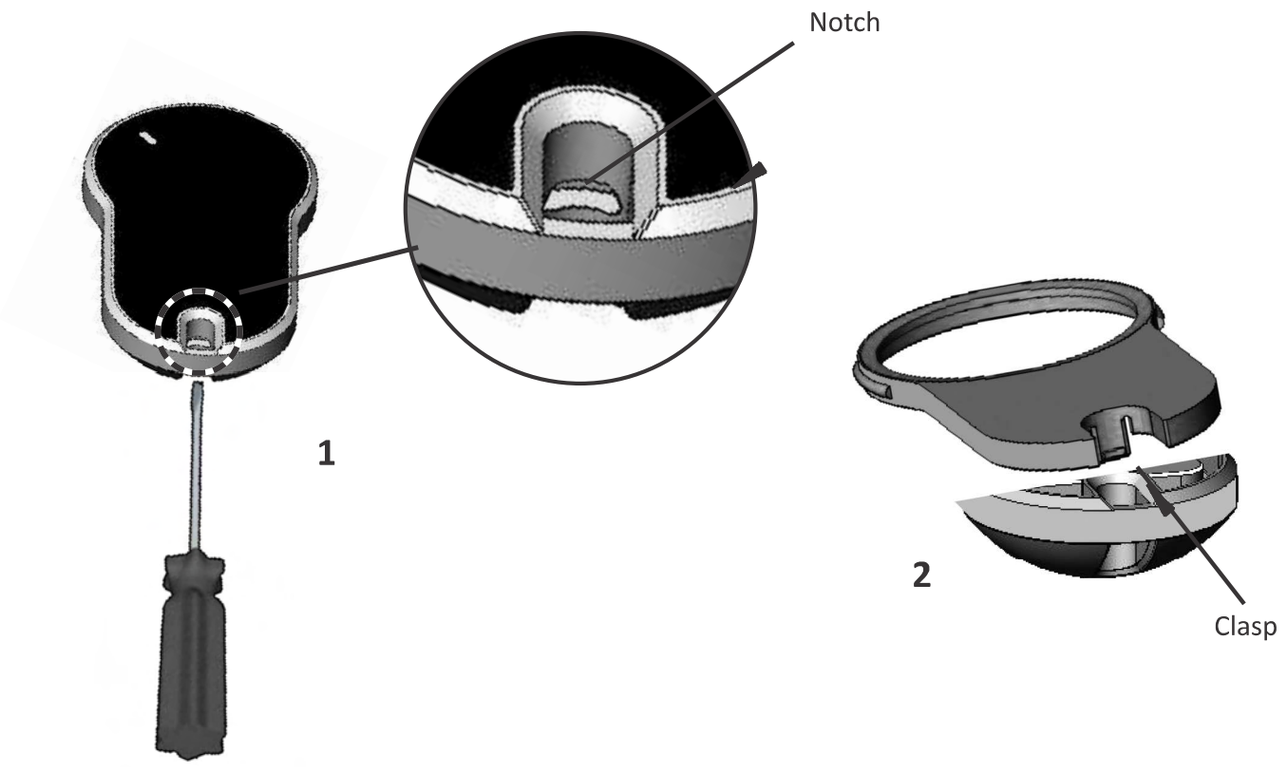

b. Take out the push button and intermediate part.

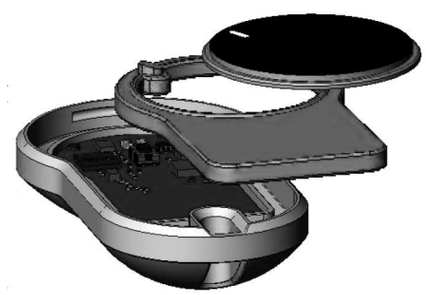

c. Take out the electronic board with the battery and remove battery.

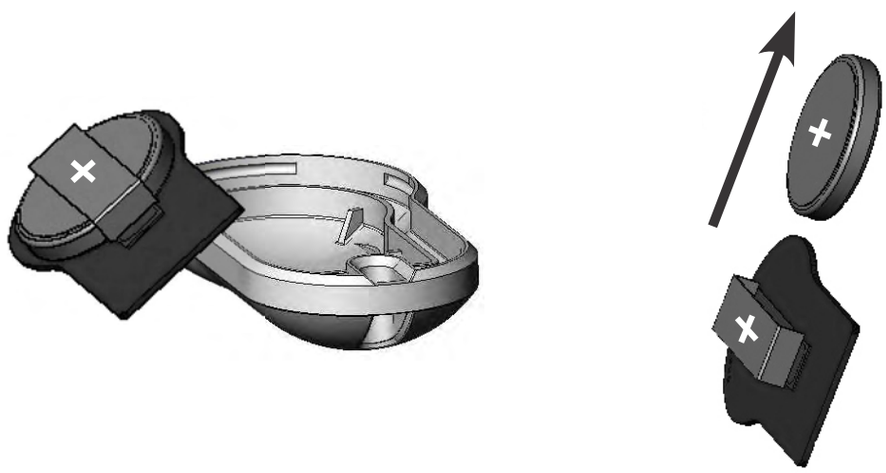

8.2 Battery Insertion

a. Insert new battery (CR2032) into the electronic board according to the "+" "-" signs (1).

b. Insert the electronic board into the remote control's housing (2).

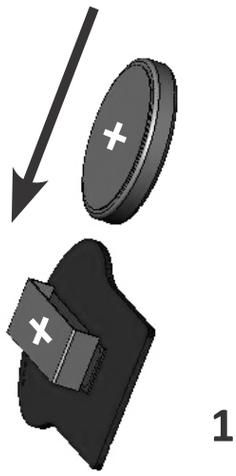

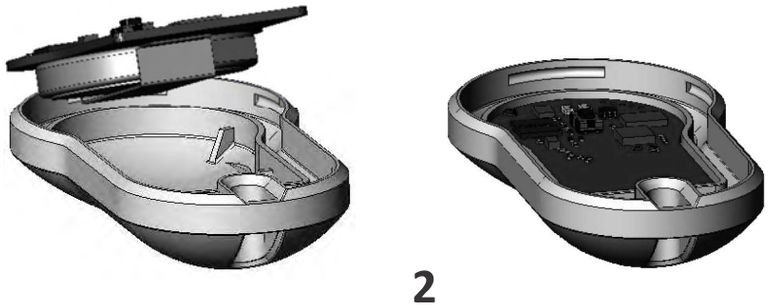

c. Reassemble the intermediate part and the push button and place over the electronic board.

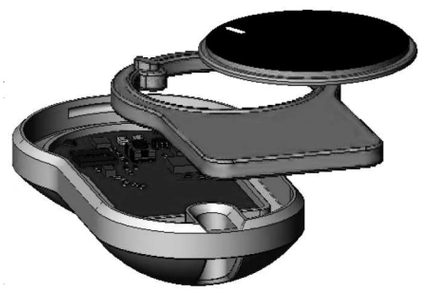

d. Place the lid and press until the clasp clicks into place.

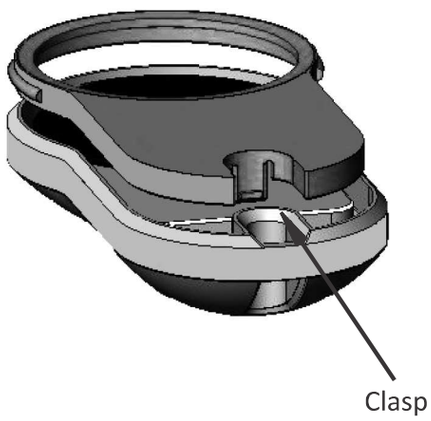

9. Troubleshooting

9.1 Limitations and External Influences

1. Door position sensor might be influenced by external electromagnetic interference.
2. After mechanical key operation, the user should unlock and lock the unit electronically.

9.2 Cases

New Unit Installation and Configuration		
Symptom	**Corrective action**	**Page**
The unit isn't accepting my administrative code.	Make sure the code you are using contains between 4-10 digits and is different from the "12345" factory code.	12
When I try to start the configuration (Cfg) process, I'm getting an error sound and light.	This could mean that the factory code hasn't been replaced with your administrative code. Go back and set your administrative code.	12
At the end of Step 1 of the configuration process, I'm getting an error sound	1. Verify that you are able to lock and unlock the door using the key without issue. 2. Please contact your locksmith	13
At the end of Step 2 of the configuration process, I'm getting an error sound.	1. Verify that the magnet has been correctly positioned 2. Contact to your locksmith to replace the magnet with a stronger one.	13
I turn the knob, but the lock isn't unlocking.	1. Make sure that the mechanical key can operate the lock 2. Check that the electronic unit is properly attached to the cylinder. 3. Please consult with your locksmith/installer to ensure proper installation was completed.	6
I've configured ENTR®, but when I slide my fingers down, the door locks; and when I slide my fingers up, it unlocks -- opposite actions of what should happen.	1. Redo the configuration process. 2. Pay attention to the door's orientation, (Left = 1 and Right = 3).	13

Remote Control		
Symptom	**Corrective action**	**Page**
I'm having trouble pairing the remote control.	1. Please confirm that the LED on the remote control is ON when you press the button. 2. Repeat the pairing process again while standing closer to the door unit. 3. If after these steps are taken and pairing still isn't working, please contact your locksmith / installer.	16
Sometimes the remote control doesn't open on the first attempt.	The remote control operates on RF signal, so you need to be within a certain proximity to the lock. Get closer and try again.	16

Constant Usage

Symptom	Corrective action	Page
ENTR® has started double beeping whenever I lock or unlock the door.	This is an indication your battery is low; it's time to charge the door unit.	31
The unit has started to beep constantly.	1. Place the knob in the zero position. 2. Please consult your locksmith or installer.	20
Sliders aren't responding as expected.	Turn the unit off, wait for 3 seconds, and then turn it back on to reset it.	20
The touch panel isn't responding as expected.	Turn the door unit off and wait for 3 seconds. When turning the power back on, avoid touching the front panel until the unit beeps.	12-19
The latch isn't moving fully into position.	1. Pull/push the door toward the frame and observe if the problem is solved. If so, consult your locksmiths to adjust the door or lock case. 2. Verify that the lock is operating smoothly when manually using the key.	6
When I lock or unlock the unit, an error sound occurs.	Please consult with your locksmith / installer to adjust the door or lock case.	6
When i fully open the door the knob is touching the wall.	Place a doorstop at correct position to prevent the door from opening too widely and damaging the knob or nearby wall.	

Fingerprint/Touchpad Reader

Symptom	Corrective action	Page
I'm having trouble pairing with the wall reader.	1. Repeat the pairing process until you hear double beep from both the door unit and the wall reader. 2. In some cases, if there are electro-magnetic interferences, there may be a need to repeat the pairing process several times until pairing is completed.	22
I'm having trouble pairing the wall reader with the door unit.	Set the door unit to pair mode, by pressing Add+Code+1, then immediately set the wall reader to pair mode. You'll have a 30 second window until the door unit reverts back to standby mode.	22
The wall reader's blue LED is blinking, but the door unit isn't responding.	Verify that the wall reader is paired to the door unit by redoing the pairing process -- you will hear double beeps from both devices when completed.	25
The touchpad isn't accepting the PIN code I'm entering.	1. This specific code already exists within the device's memory. 2. Make sure that the PIN code is 4-10 digits.	25

Symptom	Corrective action	Page
I have replaced the batteries, but when I press on "5", nothing happens.	You need to first power-up the wall reader by pressing and holding the "#" button for 5 seconds.	27
My 5-year old son and his grandmother's fingerprints are no longer working with the fingerprint reader.	Both children and the elderly have fingerprints that change. If this occurs, you'll have to repeat the fingerprint learning process for them. Alternatively, they can use a PIN code.	30
The fingerprint Touchpad keys aren't functioning properly.	Please go to Setting mode --> Device --> Device, in order to get the product version. Contact your locksmith / installer for further information and next steps.	6

Mobile App

Symptom	Corrective action	Page
The ENTR® mobile app is disconnected from the door unit and/or I can't find my lock on the app.	1. Make sure your phone is compatible with bluetooth 4.0, and that your phone model and OS version are approved for ENTR®. 2. Refresh the app. 3. Only one phone can connect to ENTR® at the same time. It's possible that another user's phone is already connected to ENTR®. If so, close the app on any other user's phone. 4. Close the app, turn off your phone's Bluetooth. Then turn Bluetooth back on, and open the app. 5. Turn the door unit off, and then turn it on again.	38
I've updated the OS on my mobile phone, but the ENTR® app still isn't working properly.	If you are a lock owner, uninstall and then re-install the app. Then go to My Locks in the app and choose lock recovery. Use your owner password to recover the lock. If you are a user, please ask the lock owner to issue you a new key.	38
I'm unable to complete the 'Set Owner' process because I can't scan the QR on the ENTR® package.	1. Verify that you have a working internet connection. 2. Try to enter the unit's serial number manually (IFEU000xxxx...). 3. Open a ticket on www.entrlock.com	38
I have created a key for a new user, but the user doesn't see that the key is available even though the user is within the lock's Bluetooth range.	1. As only one phone can connect to the lock at the same time, please make sure you have closed your app. 2. Verify that you completed the key creation process by selecting the "active" button. 3. Verify that the new user did not exceed the expiration time you have set for this key.	38
I'm unable to open the door from a distance of 10 meters / yards.	1. The app works via a Bluetooth connection , which can be impacted by the environment. 2. For both security and functionality reasons, the ideal operating distance should not exceed 5m from the door 3. Try moving as close as possible to the lock.	38
I'm getting strange error messages and/or the app crashed during operation.	1. Verify that you are using a supported mobile device and OS for ENTR® app.	37

LIMITED WARRANTY

Mul-T-Lock® hereby warrants, to the end user ("**Purchaser**") who purchased the genuine Mul-T-Lock® product (“**Product**"), from an authorized Mul-T-Lock® dealer (“**Dealer**”), that the Product will be free from defects in materials and workmanship ("**Defects**"), for a period of one year from the date the Product was purchased from Mul-T-Lock®’s authorized dealer. Subject to the terms and conditions indicated below, Mul-T-Lock® will repair or replace such Product or part thereof which, upon inspection by Mul-T-Lock®’s authorized dealer, is found to be defective, despite the Product not having been subjected to Improper Activity (as defined below).

Improper Activity shall render this warranty void. “Improper Activity” includes any and all of the following: installation by anyone other than a Dealer: improper installation; use/operation/maintenance other than in accordance with Mul-T-Lock®’s instructions and requirements (as directed below); tampering by Purchaser; neglect; damage by the application of force; bending; breaks; cracks; scratches; any other act of vandalism; repair or alteration by anyone other than a Dealer: use of keys, key blanks, cylinders, locks, approved batteries, accessories and/or other components that are not suitable and genuine Mul-T-Lock® products; all the foregoing as determined by Mul-T-Lock®, in its sole judgment.

Some basic instructions and recommendations for correct use of the Product are shown overleaf.

Mul-T-Lock®’s sole obligation under this limited warranty is to repair or replace, at Mul-T-Lock®’s sole discretion, at the venue of a Dealer, any Product and/or Product component found by Mul-T-Lock® to have Defects. This limited warranty does not grant any other rights or give rise to any other obligation, or absolve Purchaser of the responsibility to employ any other suitable measures, by whatever means, including insurance, against the risk of personal injury or damage to property. This limited warranty relate to product’s defects only.

In order to facilitate the warranty service and enable Mul-T-Lock® to determine entitlement under this warranty, Purchaser must first return the Product, with proof of purchase from a Dealer, to Mul-T-Lock®, either directly, or through the Dealer from whom Purchaser purchased the Product. All shipping, handling, travel, service call and/or other incidental and/or related charges are fully payable by Purchaser only and are not included in this limited warranty.

THE USE OF OTHER THAN SUITABLE, GENUINE MUL-T-LOCK® COMPONENTS MAY CAUSE SEVERE DAMAGE TO THE PRODUCT, AND WILL VOID THIS LIMITED WARRANTY. THIS LIMITED WARRANTY MAY NOT BE ASSIGNED OR OTHERWISE TRANSFERRED IN ANY WAY AND MAY NOT BE EXTENDED, ALTERED OR VARIED.
TO THE FULLEST EXTENT ALLOWABLE BY THE LAWS APPLYING HERETO, THIS LIMITED WARRANTY IS IN LIEU OF ANY OTHER WARRANTIES, EITHER EXPRESS OR IMPLIED, INCLUDING BUT NOT LIMITED TO ANY WARRANTIES OF MERCHANTABILITY OR FITNESS FOR A PARTICULAR PURPOSE, ALL OF WHICH ARE EXPRESSLY EXCLUDED AND DISCLAIMED. MUL-T-LOCK® WILL NOT BE LIABLE FOR LOSS OF PROFITS, ANY SPECIAL, INCIDENTAL, OR CONSEQUENTIAL DAMAGES, WHICH PURCHASER MAY SUSTAIN, OR PUNITIVE DAMAGES, EVEN IN THE EVENT OF NOTICE OF THE POSSIBILITY OF SUCH DAMAGES.

ENTR®
KEY FREE. BE FREE

Some Basic Instructions and Requirements for Correct Use of ENTR® Products

Protection of Keys:

- Keys should be used only for their original purpose, of operating the corresponding cylinder.
- Your key carries a code. Make sure you keep it concealed.
- Only genuine Mul-T-Lock® key blanks should be used.
- Duplicate keys must be performed by an authorized Mul-T-Lock® locksmith on Mul-T-Lock®'s key cutting machine.
- Keys must be inspected periodically and must be replaced when show physical wear.

Cylinders:

- Installation must be performed by an authorized Mul-T-Lock® dealer only.
- Cylinders must not be submerged in water, or exposed to any chemical wash, or be painted.
- Protect the cylinder from dirt & dust.
- Protect your cylinder from exposure to extreme temperatures. (External -20 C to +80C, Internal -10C to +50C)
- The cylinder's keyway should be lubricated at least once per year (preferably using lubricants authorized by Mul-T-Lock®, or light machinery oil). In any heavy use environments, extreme weather conditions, lubrication must be conducted every three months.

LEGAL NOTICES

Mobile phones

ENTR® warranty should not cover any problem related with end user mobile phone/ smartphone or its operation system, by connecting to ENTR® lock or installing ENTR® application. For any other limitation please refer to End User licence agreement.

Items excluded / limited from this warranty

- Screws
- Normal wear and tear
- Cleaning with cleaning detergents
- Warranty for ENTR®'s Main battery is limited for 1 year

Trademarks

Mul-T-Lock® and ENTR® are trademarks/trade names belonging to Mul-T-Lock® Ltd. No unauthorised use may be made of these trademarks.
No Insurance
No security product can ever guarantee the safety of assets. The ENTR® product is by no means a substitute for suitable insurance coverage protecting against loss or damage of your property. Mul-T-Lock® is not an insurance company and does not provide insurance services of any kind.

External Influences

- Services are subject to various external influences, outside our control, such as satellites and cellular or other communications networks, and may also be influenced by weather conditions, frequency jamming/interference, improper use or activity, interference, vandalism, destruction etc.
- Services may also be adversely affected, or rendered impossible when the ENTR® product is located in places where a signal may not be available - for example, a garage, parking lot, tunnel or other such location.
- The fingerprint sensor may not work for certain members of the population, for physiological reasons

Limitations of Services and Liability

The Services will not always provide an accurate picture of whether or not assets have been subject to unauthorized access - for example, if the ENTR® product is accessed using the original key or a duplicate key.

- Proper functioning of the ENTR® product may be impaired if the ENTR® product is not installed and maintained properly, in accordance with the instructions provided with the ENTR® product. Installation and/or disassembly must be carried out only by authorised ENTR® installation personnel.

For radio enclosure

Federal Communications Commission (FCC) Statement

Labelling requirement for small device statement (FCC15.19(3))

This device complies with part 15 of the FCC Rules. Operation is subject to the following two conditions: (1) This device may not cause harmful interference, and (2) this device must accept any interference received, including interference that may cause undesired operation.

Radio Frequency Interference (RFI) (FCC 15.105)

This equipment has been tested and found to comply with the limits for Class B digital devices pursuant to Part 15 of the FCC Rules. These limits are designed to provide reasonable protection against harmful interference in a residential environment. This equipment generates, uses, and can radiate radio frequency energy, and if not installed and used in accordance with the instruction manual, may cause harmful interference to radio communications. However, there is no guarantee that interference will not occur in a particular installation. If this equipment does cause harmful interference to radio or television reception, which can be determined by turning the equipment off and on, the user is encouraged to try and correct the interference by one or more of the following measures:

- Reorient or relocate the receiving antenna.
- Increase the separation between the equipment and the receiver.
- Connect the equipment into an outlet on a circuit different from that to which the receiver is connected.
- Consult the dealer or an experienced radio/TV technician for help.

Labeling Requirements (FCC 15.19)

This device complies with Part 15 of FCC rules. Operation is subject to the following two conditions: (1) this device may not cause harmful interference, and (2) this device must accept any interference received, including interference that may cause undesired operation.

Modifications (FCC 15.21)

Changes or modifications to this equipment not expressly approved by Mul-T-Lock® may void the user's authority to operate this equipment.

RF Exposure info (FCC 2.1091)

The product comply with the FCC portable RF exposure limit set forth for an uncontrolled environment and are safe for intended operation as described in this manual.
The further RF exposure reduction can be achieved if the product can be kept as far as possible from the user body or set the device to lower output power if such function is available.

This transmitter must not be co-located or operating in conjunction with any other antenna or transmitter.

Industry Canada statement:

This device complies with ISED's licence-exempt RSSs. Operation is subject to the following two conditions: (1) This device may not cause harmful interference, and (2) this device must accept any interference received, including interference that may cause undesired operation.

Le présent appareil est conforme aux CNR d' ISED applicables aux appareils radio exempts de licence. L'exploitation est autorisée aux deux conditions suivantes : (1) le dispositif ne doit pas produire de brouillage préjudiciable, et (2) ce dispositif doit accepter tout brouillage reçu, y compris un brouillage susceptible de provoquer un fonctionnement indésirable.

Radiation Exposure Statement:
The product comply with the Canada portable RF exposure limit set forth for an uncontrolled and are safe for intended operation as described in this manual. The further RF exposure reduction can be achieved if the product can be kept as far as possible from the user body or set the device to lower output power if such function is available.

Déclaration d'exposition aux radiations:
Le produit est conforme aux limites d'exposition pour les appareils portables RF pour les Etats-Unis et le Canada établies pour un environnement non contrôlé.
Le produit est sûr pour un fonctionnement tel que décrit dans ce manuel. La réduction aux expositions RF peut être augmentée si l'appareil peut être conservé aussi loin que possible du corps de l'utilisateur ou que le dispositif est réglé sur la puissance de sortie la plus faible si une telle fonction est disponible.