MODEL NO:688

Catalog

Instructions Before Installation 1

Tools & Materials Required 1

Warnings 2

Summary 3

Installation Instructions 4.5.6.7

Operating Instructions 8

WIFI connection 9. 10

MAINTENANCE INSTRUCTIONS 11

Cautions 12

Troubleshooting 13

Safety Measures 14

Product Specification 15

Parts List 16

Warranty Card 16

Instructions before Installation

1. Turn OFF main power supply before installation
2. Electrical installation must comply with local code ordinances and national electrical codes compliance
3. WARNING: When attempting installation or servicing the product, disconnect from the power supply. Make sure the light switch\electrical switch is turned OFF.
4. Ensure your installation area is at least 1-meter-wide, without any obstructions.
5. When mounting the fan on a ceiling outlet box, use a metal octagon box, the outlet box and its support must be able to withstand the moving weight of the fan (Minimum 35lbs.)

Tools & Materials required for Installation

1. Hex screwdriver
2. Slot screwdriver
3. Ladder
4. Wire cutter
5. Wiring supplies as required by electrical code
6. Long nose pliers

Warnings

1. Installation should BE DONE by an abled person and comply with national Electric code, ANSI/NFPA70.
2. To reduce the risk of personal injury, during cleaning DO NOT insert foreign objects between rotating fan blades. Indicate fan must be shut off when cleaning
3. Mount only to an outlet box marked acceptable for fan support
4. Mount at least 2.15meters (7 Feet) above floor or grade level, from the base of the product.

Read all instructions before using the heater

When using electrical appliances, basic precautions should always be followed to reduce the risk of fire,electric shock, and injury to persons including the following:

IMPORTANT INSTRUCTIONS

1. Read all instructions before installing or using this heater.
2. This heater is hot when in use. To avoid burns, do not let bare skin touch hot surfaces. Keep combustible materials, such as furniture pillows, bedding papers, clothes, etc. and curtains at least 0.9 mfrom the front of the heater and keep them away from the sides and rear(sides and rear restrictions apply to location dedicated heaters only).
3. Extreme caution is necessary when any heater is used by or near children or invalids andwhenever the heater is left operating and unattended.
4. Do not operate any heater after it malfunctions. Disconnect power at service panel and have heater inspected by a reputable electrician before reusing.
5. Do not use outdoors.
6. To disconnect thermal support system, turn off power to heater circuit at main disconnect panel. Wouldn`t it be easier to shut off Thermal support from the remote, THEN disconnect it from main panel if REMOTE FAILS TO SHUT OFF
7. Do not insert or allow foreign objects to enter any ventilation or exhaust opening as this maycause an electric shock or fire, or damage the heater.
8. To prevent a possible fire, do not block air intakes or exhaust in any manner.
9. A heater has hot and arcing or sparking parts inside. Do not use it in areas where gasoline and paint, or flammable vapors or liquids are used or stored.
10. Use this heater only as described in this manual. Any other use not recommended by themanufacturer may cause fire, electric shock or injury to persons.
11. SAVE THESE INSTRUCTIONS

Summary

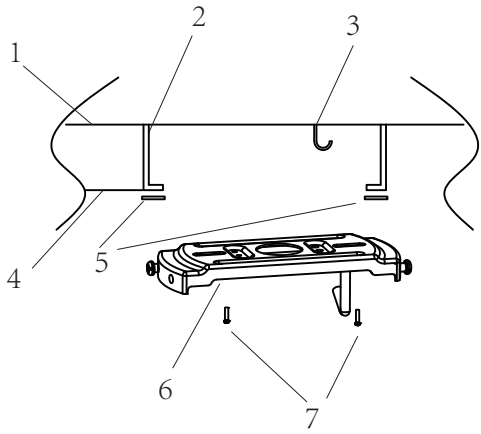

Pic1

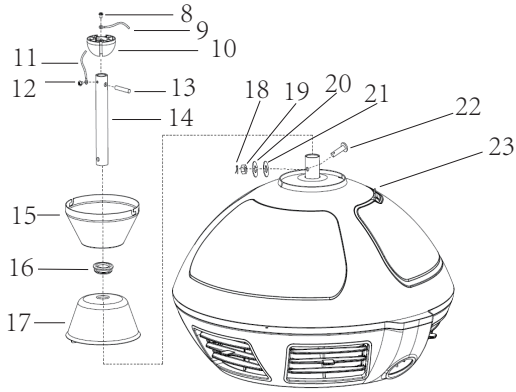

Pic2

1.Support ceiling Structure
2. Electrical outlet box
3. J- hook
4. Ceiling
5. Rubber gasket (2pcs)included
6. Mounting bracket
7. Outlet box screw
   (2pcs provided)
8. Screw provided
9. Ground wire
10. Hemisphere
11. Ground wire
12. Screw 1pc provided
13. Lock pin
14. drop-rod with ground wire
15. Ceiling canopy
16. Rubber bushing
17. Top cover
18. Cotter pin
19. Nut
20. Spring washer
21. Flat washer
22. Bolt
23. Main boby

Installation Instructions and Warnings

CAUTION – To reduce the risk of fire, and/or electric shock follow below instructions:

1. Do not store, use gasoline or other flammable vapors and liquids or any other combustibles in the same vicinity where your unit has been installed. Keep electrical cords, drapery, furnishings, at least 3 feet (0.914metres) from the front, base, sides, and rear of the thermal heating support system.
2. Do not use this fan with any solid-state speed control device. Your fan is operated by remote control included with unit
3. Installation--- Mount fan only to outlet box marked (A) acceptable for fan support of 15.9kg or 35lbs, and use mounting screws provided with the outlet box.
4. Automatically Operated Device – shut power off with remote control included with unit. If remote control fails to shut power off, disconnect power from electrical power panel.

WARNING – TO REDUCE THE RISK OF FIRE, ELECTRIC SHOCK OR INJURY TO PERSONS, OBSERVE THE FOLLOWING:
a) Use this unit only in the manner intended by the manufacturer.
If you have questions, contact the manufacturer.
b) Before servicing or cleaning unit, switch power off at service panel and lock the service disconnecting means to prevent power from being switched on accidentally.
When the service disconnecting means cannot be locked, securely fasten a prominent warning device, such as a tag, to the service panel.

WARNING: To Reduce The Risk Of Fire Or Electric Shock, Do Not Use This Fan With Any Solid-State Speed Control Device.

Installation instructions

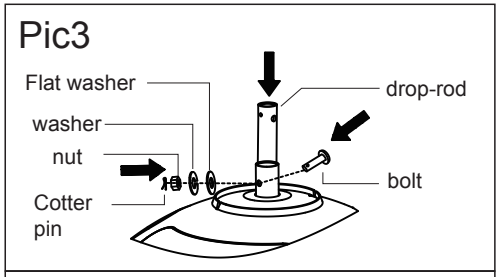

Step 1. Picture 3.Position the drop-rod into the yoke on the fan and align their bolt holes. Insert bolt through the hole then tighten the flat washer and bolt. Insert cotter pin through hole in the end of bolt. Then adjust the cotter pin to lock it until tight.

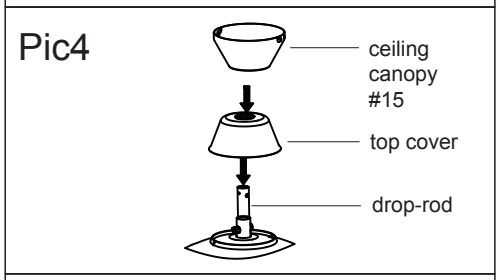

Step 2. Picture 4.Position the top cover which is installed with rubber bushing through the drop-rod and press downward to tighten it, then through the ceiling canopy(#15) to drop-rod (add #) and let it lie on the top cover

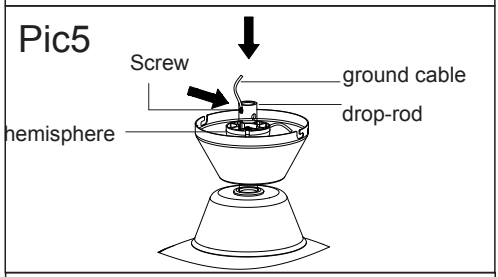

Step 3. Picture 5.Position hemisphere which is installed and fixed with ground cable through drop-rod, then lock the ground cable on drop-rod.

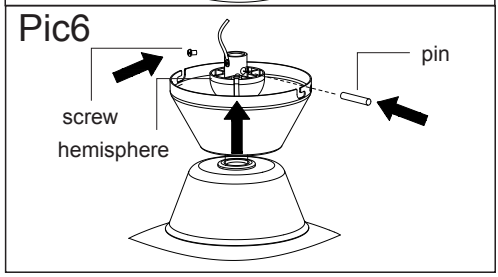

Step 4. Picture 6.Pull-up the hemisphere and insert the pin to the hole on drop-rod, then tighten the screw of hemisphere and drop rod

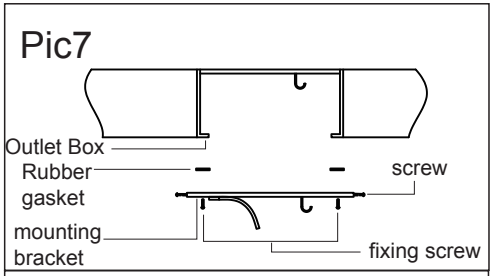

Step5. Picture 7.Insert 2 screws to the corresponding hole of electrical outlet box which is installed in ceiling and the ceiling canopy (leaving 2mm of space, not too tight)

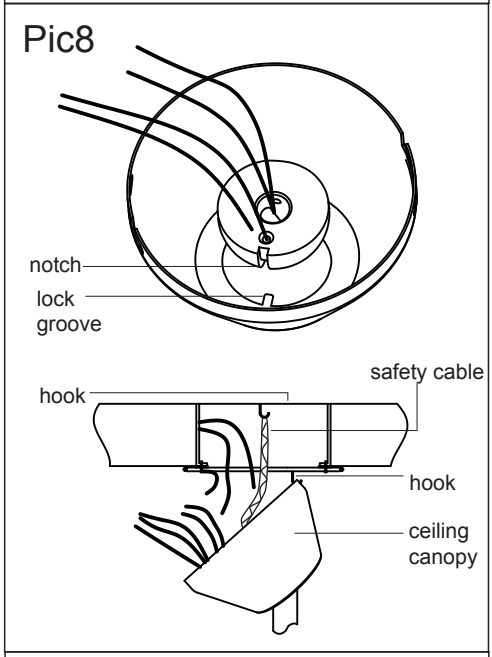

Step 6. Picture 8.Align the notch on the hemisphere to the lock groove on ceiling canopy (after installed, do not interfere between ceiling canopy and hemisphere, and let hemisphere move smoothly in ceiling canopy). Hang it on the hook of mounting bracket as on Step 5. Picture 7.Hang the safety cable on the hook of metal outlet box.

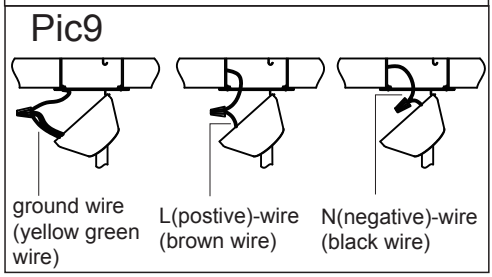

Step 7. Picture 9.Connect Corresponding wires using twist on wire nut connectors (Marrettes)Connect: N-(Negative)black wire of fan to N- (Negative)black wire of electrical outlet box.
Connect: L-(Positive) brown wire of fan to L-(positive)brown wire of electrical outlet box. Place ground wires (Yellow, Green) separate from other wires, tuck wires into outlet box.

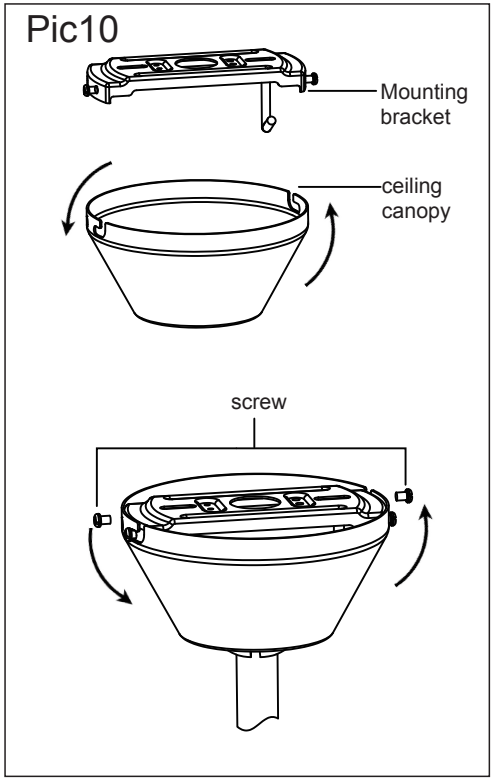

Step 8. Picture 10.Take down the ceiling canopy from hook then mount onto the screw of mounting bracket (screw slot on the ceiling canopy should fit flush with screw) tighten screw to lock on the canopy properly.(To enter screw properly onto ceiling canopy, twist ceiling canopy gently counter clock-wise). Tighten the remaining 2 screws on ceiling canopy, finish installation.

Operating instructions

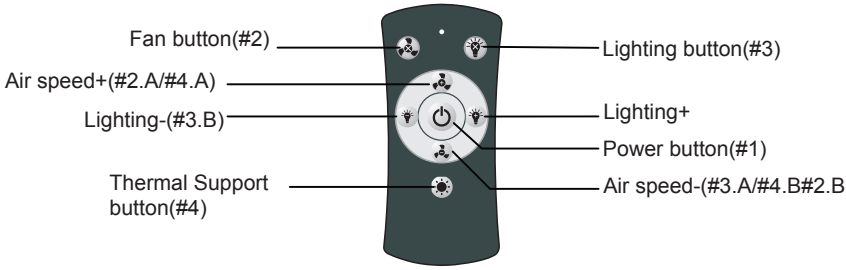

Pic11

A. Power on

Power ON is indicated with a short beep sound from unit, then fan is on standby.

B.(Pic.11) Control

1.Power Button

1.A.When power ON button is pressed, fan will run at default mode\mid-setting, press again to go back too standby (if thermal support is ON, fan will power off after 15seconds. Wait 15seconds to restart)

1.BPress power ON a third time, fan will return to the last working mode (memory function only works while fan is running or on standby. If powered off and restarted, fan will run at default mode\mid-setting).

2.Fan Button and Air Speed +/- button

2.A.Press fan button for fan OFF. Press again for fan ON.

2.B. Press Air speed + button for air speed to increase to higher setting.

2.C. Press Air speed – button for air speed to reduce to lower setting.

3. Lighting Button and Lighting +/- button

3.A. Press lighting button to activate on default brightness. Press again to deactivate lights.

3.B.Hold “lighting +” button until desired level of brightness is achieved or until maximum level of brightness.

3.C.Hold “lighting -” button to dim until decreased level of brightness is achieved and/or until minimum level of brightness.

Note: It takes 10 seconds to reach the maximum\minimum level of brightness. Indicator light will not signal after 10 seconds at which time the minimum\maximum brightness is reached.

4. Thermal Heating Support Switch(see Pic # 11)

4. Press this button one time to activate at low-setting (if fan is already running before activating thermal support, press this button for the air speed to return to low-setting). To verify if thermal support is activated, look for the red thermal support indicator light on the base of fan; press again to de-activate thermal support and red indicator light will be OFF. Fan will stop after 15seconds.

4.APress "air speed +" to increase thermal support to highest setting

4.BPress "air speed -" to decrease thermal support to lowest setting.

C. Power Off & Stand by Notification

1. When powered off/disconnected, memory function will disable and return to default mode.
2. When fan is on standby, only main power button is effective, other buttons are invalid.

Wi-Fi Connection

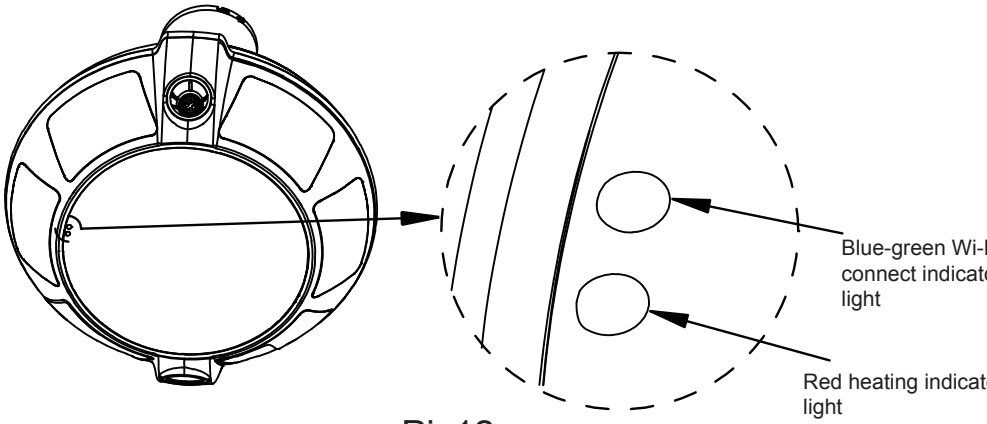

Pic12

Wi-Fi Connection Display: Bicolor Indicator Light (shown as Pic.12)

1. Verify if green indicator light is ON. Fan can be on any mode to activate Wi-Fi.
2. Hold “lighting” button for 3 seconds (see pic 11). The Wi-Fi indicator light will start blinking blue & green at which point Wi-Fi will start paring.
3. After selecting the Wi-Fi router from your mobile phone and connected to the fan’s Wi-Fi, the blue Wi-Fi indicator light will be activated. If you see the green light, it means the devices were not paired successfully.
4. If Wi-Fi connection is failed within 60seconds, fan will automatically exit from paring mode and Wi-Fi green light would light up. Try again until you see the blue indicator light only.
5. Press “air speed +” button and hold 5 seconds to disconnect Wi-Fi from unit, once WI-FI is disconnected your fan can only be controlled via remote controller provided with your unit.

THIS DEVICE COMPLIES WITH PART 15 OF THE FCC RULES.

NOTE: This equipment has been tested and found to comply with the limits for a Class B digital device, pursuant to Part 15 of the FCC Rules. These limits are designed to provide reasonable protection against harmful interference in a residential installation. This equipment generates uses and can radiate radio frequency energy and, if not installed and used in accordance with the instructions, may cause harmful interference to radio communications.

However, there is no guarantee that interference will not occur in a particular installation. If this equipment does cause harmful interference to radio or television reception, which can be determined by turning the equipment off and on, the user is encouraged to try to correct the interference by one or more of the following measures:

- Reorient or relocate the receiving antenna.
- Increase the separation between the equipment and receiver.
- Connect the equipment into an outlet on a circuit different from that to which the receiver is connected.
- Consult the dealer or an experienced radio/TV technician for help.

FCC warnings
Shielded cables must be used with this unit to ensure compliance with the Class B FCC limits.

Warning: changes or modifications to this unit not expressly approved by the party responsible for compliance could void the user's authority to operate the equipment:

This device complies with Part 15 of the FCC Rules and Industry Canada licence-exempt RSS standard(s).Operation is subject to the following two conditions: (1) this device may notcause interference, and (2) this device must accept any interference, including interference that may cause undesired operation of the device.

Le présent appareil est conforme aux CNR d'Industrie Canada applicables aux appareils radio exempts de licence. L'exploitation est autorisée aux deux conditions suivantes : (1) l'appareil ne doit pas produire de brouillage, et (2) l'utilisateur de l'appareil doit accepter tout brouillage radioélectrique subi, même si le brouillage est susceptible d'en compromettre le fonctionnement.

MAINTENANCE INSTRUCTIONS

WARNING: Power off or disconnect from power supply before installing or removing LED Bulb light

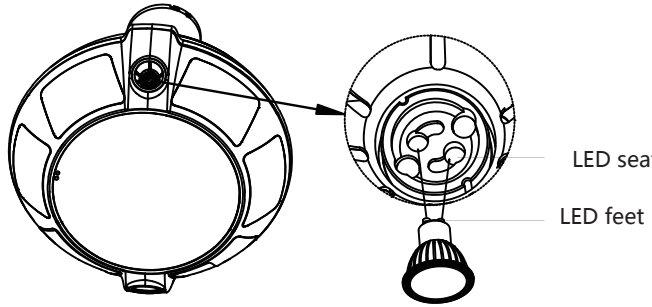

Pic13

LED bulb replacement (shown on Pic.13)

1. Removing led bulb: Press the LED bulb with two thumbs tightly to rotate 10℃ degreecounter clockwise until the LED bulb is loose.
2. affix the sucker on the LED surface and press the sucker to check if firmly affixed, then pull out the LED bulb (if hard to pull out,you can slightly rotate the sucker to let it loose);

3. affix sucker on new LED bulb, align the feet to the installing hole (install direction as grey arrow shown in Pic.and installing hole as shown in the green)then install, press the edge of the LED and rotate around 10°C degree in clockwise, after feel LED is properly fixed, slightly tap the fan to check if LED is installed properly.
4. After Led Bulb installation: LED bulb should be flush to the casing, if not; you should re-install the LED bulb as mentioned above.
5. Remove The LED Molar protection on LED bulb.
6. must let the heating element cooling down before maintenance

Warning: after use the sucker to install/uninstall the LED bulb, please keep the sucker away from children, this sucker is not a toy ,avoid ingestion.

CLEANING INSTRUCTION

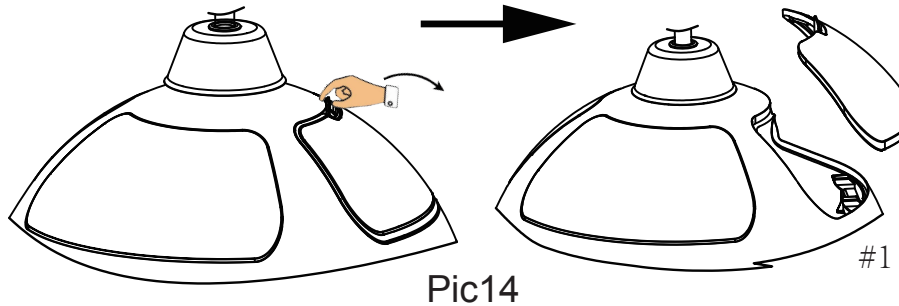

Pic14

After using for a period of time, the interior of the fan must be cleaned by removing any dust or debris.

1. Power OFF the main switch on remote controller, then disconnect the power supply.
2. When fan blades are not in motion and fully stopped, use a ladder, loosen screw(show photo of screw& indicate what type of screw) from the removable cleaning grid(above photo illustration #1)with the use of the appropriate tool,(Mention what type of tool)then pull down and pull out as shown on picture #14.

3.Use Vacuum included to clean the dust and debris, or use other gentle cleaning tools to clean the dust and debris inside.

Installation Pre-Cautions

1. Disconnect Power Supply before installation or it will cause an electric shock or personal injury and damage the circuitry of the fan.
2. During installation use screw to lock . All screws must use lock washer. Tighten all the screws properly.
3. Correctly connect all wires accordingly as mentioned on “Step 7 Picture 9” using twist on wire nut connectors (Marrettes). Properly tighten all screws.
4. Electrical Outlet Box: To reduce the risk of fire, electric shock, or personal injury, mounting bracket must be installed on Electrical outlet box which have UL/CSA certifications or marked with qualified label, use only screws provided with your unit or with your certified electrical outlet box.
5. To ensure screws do not touch or squeeze the power wires during screwing, ensure the internal wires do not interfere with the hemisphere and other movable parts. Once all wires have been connected properly, place wires and connectors into the metal outlet box.

LED bulb replacement Pre-cautions:

1. Before mounting LED bulb, power OFF the main power supply. The replacement LED bulbs specification must be LR16-05W-AT-02, otherwise, it will cause damage to the fan. (SEE PIC 13)
2. Power off Unit when removing the LED bulb, do not touch the lamp base, or shock may occur.
3. LED Bulb Installation Must be correctly installed, do not force to install (See pic #13).If Led bulb is not installed in the correct direction it will cause damage to the lamp and base.
4. Once LED bulb is installed the bulb surface should fit flush to the casing, rotate the LED bulb to the right (clockwise) around 10℃degree till the LED Bulb tightens properly.

Cleaning Precautions:

1. Power OFF the unit on remote controller, and/or disconnect the power supply before cleaning.
2. Do not open grid or clean before fan blades completely stop rotating.
3. Do not force open the removable cleaning grid. To open, use proper tools as indicated on Pic #14.Force opening the grid will cause damage to the locking system. Once cleaning grid is damaged, fan will cease to operate.
4. DO NOT use liquid or corrosive liquids to clean the interior of the fan.
5. During cleaning, DO NOT push, pull or use sharp objects to replace in proper wires, movable parts or electronic components. Any inappropriate handling may result in electric shock and cause damage to the fan.

Troubleshooting

After fan is installed, remote controller does not work when buttons are pressed	1. Wiring connection is in-correct. 2. Removable cleaning grid is detached or not installed properly 3. Batteries were not installed properly or exhausted
When fan is connected to power supply, buzzer beeps but there's no response on remote controller button.	1. Batteries exhausted .2. Batteries installed in reverse
LED lights do not function	1. LED bulb damaged 2. Not properly installed
Too noisy, vibrating or buzzing sound	1. Rubber gasket on mounting bracket missing during installation 2. Hemisphere is not in proper position, causes the fan to slant or be off balance. 3. Fan was not in its proper position when installed to the canopy.
Fan is shaking	1. Screw on mounting bracket and metal outlet box may be too loose 2. Screw on mounting bracket and canopy are not tightened properly
Drone sound from motor is heard, but fan blades are not rotating	Foreign objects inside are blocking the blades. (Make sure to power off before verifying)

Safety Measure

1. Power off the main power supply before installation (disconnect).
2. Electrical connection must comply with local code and national electrical code compliance.
3. Ensure fan is installed correctly, and fan blade rotates freely without obstruction.
4. Metal outlet box must comply with safety specification and local code, and must withstand the rotation weight of fan (at least 35lbs.)

product specification

Operating Voltage	120V
Operating Frequency	60Hz
Maximum power	700W
Maxinum noise	<=60dB
Maxinum CFM	1200m^3/h
Maxinum air speed	7.0m/s
Maxinum weight	8Kg
operating space	12*12*10 ft room
product size	574*574*420mm(not include drop-rod)

Parts list

Main Unit	1pcs
Vacuum	1pcs
LED bulb	2pcs
Drop-rod assemblies	1pcs
Drop-rod(150mm and 270mm)	2pcs
Mounting bracket assemblies	1pcs
Bolt	1pcs
Nut	1pcs
Flat washer	1pcs
Spring washer	1pcs
Cotter pin	1pcs
Wire connector	1pcs(big), 2pcs(small)
Wall case	1pcs

Warranty Card

Product:	bladeless ceiling fan model: 688
Purchasing date:	
Customer address with postal:	
Contact phone:	
Store purchasing	& location
LIMITED WARRANTY INSTRUCTIONS	Duration of Warranty: 2 years under manufactures defect Warranty is applicable under proper manufacture's usage. Warranty is Valid from the purchased date indicated on invoice, Valid invoice must be provided.
Regarding the implementation of the warranty's rules & regulations, please consult our company service hotline:	
maintenance center add:	
maintenance call:	
maintenance email:	
maintenance record:	
maintenance items:	
da	