PowerLogic™ P5

Protection Relay

User Manual

06/2024

Version: P5/EN M/02-501A

www.se.com

Legal Information

The information provided in this document contains general descriptions, technical characteristics and/or recommendations related to products/solutions.

This document is not intended as a substitute for a detailed study or operational and site-specific development or schematic plan. It is not to be used for determining suitability or reliability of the products/solutions for specific user applications. It is the duty of any such user to perform or have any professional expert of its choice (integrator, specifier or the like) perform the appropriate and comprehensive risk analysis, evaluation and testing of the products/solutions with respect to the relevant specific application or use thereof.

The Schneider Electric brand and any trademarks of Schneider Electric SE and its subsidiaries referred to in this document are the property of Schneider Electric SE or its subsidiaries. All other brands may be trademarks of their respective owner.

This document and its content are protected under applicable copyright laws and provided for informative use only. No part of this document may be reproduced or transmitted in any form or by any means (electronic, mechanical, photocopying, recording, or otherwise), for any purpose, without the prior written permission of Schneider Electric.

Schneider Electric does not grant any right or license for commercial use of the document or its content, except for a non-exclusive and personal license to consult it on an "as is" basis.

Schneider Electric reserves the right to make changes or updates with respect to or in the content of this document or the format thereof, at any time without notice.

To the extent permitted by applicable law, no responsibility or liability is assumed by Schneider Electric and its subsidiaries for any errors or omissions in the informational content of this document, as well as any non-intended use or misuse of the content thereof.

Table of Contents

General information 15
- Legal notice 15
- Purpose 15
- Safety information and password protection 16
- FCC Part 15 Notice 16
- Abbreviations 18
- Description of the document versions 20

Range description 22
- Easergy to PowerLogic renaming 22

Introduction 24
- Selection guide by application 24
- Function table 26
- Technical characteristics 30
- Environmental characteristics 36

Installation 42
- Safety instructions 42
- Transport, handling and storage 44
  - Transport 44
  - Handling 44
  - Storage 44
- Unpacking 45
  - Equipment receipt 45
  - Package contents 45
- Equipment identification 47
- Dimensions 51
- Operating environment 53
- Mounting 54
  - General mounting operations 54
  - Flush mounting with accessory 56
  - Flush mounting without accessory 59
  - Rack mounting 61
- Rear panel connectors and application diagrams 63
  - PowerLogic P5 rear panel 63
  - Typical application diagrams 71
- Wiring on the real panel 79
  - Slot A: analogue module 79
  - Digital input connections 88
  - Slot B: power supply + digital 4-input/4-output 89
  - Slot C, D, E: additional digital input/output modules (6I4O/12I4O/5I5O) 91
  - Slots D and E: Arc-flash module (for PowerLogic P5x30 only) 92
  - Installing the digital I/O connectors 92
  - Wiring accessories for Slot B, C, D, E 93
  - Connecting earth/ground 93
- Optional rear communication ports and modules 96
  - Location of the communication ports 96
  - Installing the modules 97

Slot L: Ethernet communication module with RSTP redundancy (reference REL51042) 98
Slot L: Protection communication module with SDLC (references REL51053 and REL51043) 99
Slot M: Ethernet communication module with RSTP redundancy 101
Slot N: serial line communication modules 103
Slot M & N: Combined Ethernet HSR/PRP 2TP + RS485 module (reference REL51048) 106
Slot M & N: Combined Ethernet HSR/PRP FO + RS485 module (reference REL51049) 107
Slot P: extension module (reference REL51034) 109
Slot P: extension Zigbee module (reference REL51044) 110
Installation of sensors and connection of modules for Digital Circuit Breaker monitoring 111
Installation of Zigbee sensors 111
Connection of PowerLogic P5 with EOS-BM100/EOS-MCMx00 112
Other accessories 114
CSH120 (reference 59635), CSH200 (reference 59636), CSH300 (reference 59637) and GO110 (reference 50134) 114
Interposing CSH30 (reference 59634) 118
LPVT hub connector (reference EMS59573) 121
Voltage adapter (reference EMS59572) 123
RJ45 LPCT/LPVT plug 126
Arc-flash sensor (reference REL52801 to REL52810) 127
MET148-2 - temperature sensor module (reference 59641) 132
IRIG-B module (reference REL51045) 135
CT requirements 137
Phase and neutral overcurrent protection 137
Practical information 138
Restricted earth fault protection 138
Transformer differential protection 138
Calculating the saturation current in class P 139
Calculating the saturation current in class PX 140
LPCT configuration 141
Introduction 141
Benefits of LPCTs 141
LPCT characteristics 143
LPCT input characteristics 144
LPCT configuration procedure 144
LPVT configuration 147
Introduction 147
Benefits of LPVTs 147
LPVT characteristics 148
LPVT input characteristics 149
LPVT configuration procedure 150
LPVT configuration with VT adapter 152
Introduction 152
Benefits of VT adapter 152
EMS59572 adapter characteristics 152
LPVT input characteristics 152

EMS59572 VT adapter configuration 153
LPVT voltage sharing application 154
Commissioning 156
Principles 156
Testing tools and equipment 157
Check the digital outputs 158
PowerLogic P5 protection relay check 158
Check with the PowerLogic P5 protection relay de-energised 158
Testing with the PowerLogic P5 protection relay energised 160
Communication ports 163
Virtual injections 163
Secondary injection test 164
Apply application-specific settings 165
Current inputs 166
Typical voltage measurement modes in PowerLogic P5 166
Voltage inputs 166
LPCT and LPVT inputs 167
Check the protection functions 168
Testing with LPIT test box (reference REL51037) 170
Introduction 170
LPCT/LPVT testing diagram 172
Current injection test 173
Voltage injection test 174
Current and voltage injections test 174
Test input (20th RJ45) 175
LPCT/LPVT Test Sockets and Plugs ESSAILEC® 175
Model numbers for LPCT/LPVT accessories 176
Primary injection test 178
Voltage connections 178
Current connections 179
LPCT connections 179
Demonstrate circuit breaker operation 180
Arc-flash detection system setup and testing 180
Setting up the arc-flash system 180
Commissioning and testing 181
InterRelay Functional test 187
Line differential protection functional test 187
Stand-alone relay test 187
Inter-connected relay test 187
Local test mode 188
Loopback test procedure 188
Final check 189
Cybersecurity 191
Cybersecurity overview 191
Security policy 192
Product defense-in-depth 194
Device security capabilities 194
Protected environment assumptions 195
Potential risks and compensating controls 196
Cybersecurity configuration 198
HMI Auto-login 199

Roles and rights 200
Password complexity 202
Password reset and factory reset 203
Login and logout 208
Basic CS level setting 209
Advanced CS level setting 212
Centralized authentication 224
Port hardening 234
Security event logging 234
Upgrades management 235
Security functionality verification 235
Use 236
Introduction 236
Local panel 237
Presentation 237
Push buttons 239
LED indicators 239
Customising the local panel 240
Introduction to the LCD display 241
PowerLogic P5 protection relay service cycle 241
Menu structure 242
Login and logout 248
Login 248
Logout 248
Adjusting the LCD contrast (for PowerLogic P5x20) 248
Changing language 249
Changing the parameters 249
Manage the alarm messages 251
Matrix operations 252
Controlling objects 253
Specific language file change 254
Transferring data to USB memory stick 254
eSetup Easergy Pro 257
Overview 257
Operation modes 258
Setting up the connection 259
Web HMI 261
Overview 261
Device reboot reminder 261
Firefox 262
Internet Explorer in Windows 7 263
Edge in Windows 10 266
The EcoStruxure Power Device application 270
Connecting to protection relays via Ethernet 270
Protection functions 271
General features of protection stages 271
Enable/disable protection functions 271
Setting groups 271
Protection stage status 272
Directional operation 272
Mode of use for testing purposes 272

Start and trip signals 273
Start and trip counters 273
Blocking 273
Overshoot time 273
Disengaging time and reset time 274
Hysteresis and reset ratio 275
Time grading for logic selectivity 276
Accuracy claims 276
Recorded values on the last eight faults 277
Dependent time and definite time operation 278
Description 278
Standard dependent operation delay 280
Standard dependent reset delay 281
Programmable dependent time curves 282
Cold load pick-up 284
Description 284
Example 284
Characteristics 285
Selective Overcurrent Logic (SOL) 286
Description 286
Operation 286
Characteristics 289
Incomer fault locator (ANSI 21FL) 290
Description 290
Example 291
Characteristics 292
Feeder fault locator (ANSI 21FL) 293
Description 293
Example 294
Characteristics 294
Neutral admittance (ANSI 21YN) 296
Description 296
Operation 297
Block diagram 299
Characteristics 300
Transformer Overfluxing Protection (ANSI 24) 302
Description 302
Function decomposition 302
Block diagram 304
Characteristics 304
Synchro-check (ANSI 25) 306
Description 306
Block diagram 308
Characteristics 308
Undervoltage (ANSI 27) 310
Description 310
Block diagram 312
Characteristics 313
Positive sequence undervoltage (ANSI 27P) 314
Description 314
Block diagram 315

Characteristic 316
Directional power (ANSI 32) 317
Description 317
Block diagram 317
Characteristics 318
Wattmetric earth/ground fault (32N) 319
Description 319
Four memory modes 320
Operation 322
Tripping direction 322
Block diagram 323
Characteristics 323
Phase undercurrent (ANSI 37) 326
Description 326
Low-current self-blocking 326
Block diagram 326
Characteristics 327
Temperature monitoring (ANSI 38) 328
Description 328
Block diagram 328
Characteristics 329
Negative sequence overcurrent (ANSI 46) 330
Description 330
Back-up mode 330
Block diagram 331
Characteristics 332
Unbalance overcurrent, broken conductor (ANSI 46BC) 334
Description 334
Block diagram 335
Characteristics 335
Negative sequence overvoltage (ANSI 47) 336
Description 336
Block diagram 336
Characteristics 337
Thermal overload protection for feeder (ANSI 49F) 338
Description 338
Additional features 340
Time to trip calculation 341
Block diagram 341
Characteristics 342
Motor status 344
Description 344
General settings 346
Motor speed detection 347
Description 347
Block diagram 348
Characteristics 348
Motor start time supervision (ANSI 48) 349
Description 349
Block diagram 350
Characteristics 350

Thermal overload protection for machine (ANSI 49M) 351
Description 351
Additional features 354
Time to trip calculation 355
Time left for motor start 355
Block diagram 356
Characteristics 357
Locked rotor (ANSI 51LR) 359
Description 359
Block diagram 359
Characteristics 360
Motor restart inhibition (ANSI 66) 361
Description 361
Block diagram 363
Characteristics 364
Motor overspeed (ANSI 12) 365
Description 365
Block diagram 365
Characteristics 365
Motor underspeed (ANSI 14) 367
Description 367
Block diagram 367
Characteristics 368
Motor Anti-backspin (ABS) protection 369
Description 369
Block diagram 369
Characteristics 370
Emergency restart 371
Description 371
Characteristics 372
Inrush detection (ANSI 68H2) 373
Description 373
Block diagram 374
Characteristics 374
Switch On To Fault (ANSI 50HS) 375
Description 375
Operation 375
Block diagram 376
Characteristics 376
Non-directional/directional phase overcurrent protection (ANSI 50/51/67) 378
Description 378
Directional operation 381
Voltage-controlled overcurrent 382
High Impedance Busbar Differential Protection 382
Back-up mode 383
Block diagram 383
Characteristics 385
Arc-flash (ANSI 50ARC) 388
Description 388
Block diagram 390

Operation 390
Characteristics 393
Circuit breaker failure (ANSI 50BF) 395
Description 395
Block diagram 397
Characteristics 397
Capacitor bank unbalance (ANSI 51C) 399
Description 399
Compensation method 399
Characteristics 403
Overvoltage (ANSI 59) 404
Description 404
Block diagram 405
Characteristics 405
Neutral overvoltage (ANSI 59N) 407
Description 407
Block diagram 408
Characteristics 408
Capacitor overvoltage (ANSI 59C) 410
Description 410
Reactive power of the capacitor bank 410
Three separate capacitors connected in star (III Y) 410
Three phase capacitor connected internally in star (Y) 411
Overvoltage and reactive power calculation example 411
Block diagram 412
Characteristics 412
Non-directional/directional earth/ground fault overcurrent (ANSI 50N/51N/67N) 414
Description 414
Modes for different network types 415
Input signal selection 416
Intermittent earth/ground fault detection 417
Faulty phase detection during earth/ground fault 417
Six independent stages 419
Restricted earth-fault with external connection (high-impedance) 419
Back-up mode 419
Block diagram 420
Characteristics 421
Restricted earth fault protection (ANSI 64REF) 425
Description 425
Operating modes 427
Block diagram 430
Characteristics 431
Transient intermittent earth/ground fault (ANSI 67NI) 433
Description 433
Block diagram 433
Operation 434
Characteristics 436
5th harmonic (H5) detection (ANSI 68H5) 437
Description 437

Block diagram....437
Characteristics....437
Auto-recloser function (ANSI 79)....439
Description....439
Operation....440
Characteristics....443
Overfrequency (ANSI 81O)....444
Description....444
Block diagram....445
Characteristics....445
Underfrequency (ANSI 81U)....447
Description....447
Block diagram....448
Characteristics....448
Rate of change of frequency (ANSI 81R/81FR)....450
Description....450
Block diagram....451
Characteristics....451
Lockout relay (ANSI 86)....453
Description....453
Latch function....453
Protection communication....454
Introduction....454
Configurations....454
Communication monitoring....455
Characteristics....456
InterRelay (ANSI 85)....457
Introduction....457
InterRelay communication....457
Matrix....457
Characteristics....458
Line differential protection (ANSI 87L)....459
Description....459
Current measurement and preprocessing....460
Differential protection calculation....463
Capacitive charging current compensation....467
Transformers in-zone application....468
Further considerations....472
Block diagram....472
Characteristics....473
Transformer differential protection (ANSI 87T)....476
Description....476
Block diagram....485
Characteristics....485
Programmable stages (ANSI 99)....488
Description....488
Available signals....489
Eight independent stages....489
Measurement functions....490
Primary, secondary and per unit scaling....490
Scaling settings....490

Current values 492
Voltage values 494
Reading of measurements 499
Phase currents 499
Neutral current 500
Positive and negative sequence currents 500
Frequency 501
Voltages 502
Neutral voltage 504
Positive and negative sequence voltages 504
Power and power factor 505
Active, reactive, apparent power 505
Power calculation 506
Cosφ and power factor 506
Power and current direction 507
Characteristics 509
Active and reactive energy 510
Harmonics and Total Harmonic Distortion (THD) 511
Demand values 512
Minimum and maximum values 512
Average current 514
Voltage sags and swells 515
Temperature 517
Control functions 518
Digital outputs 518
Digital inputs 521
Virtual inputs and virtual outputs 526
Matrix 528
General information 528
Output matrix 529
Blocking matrix 529
LED matrix 531
Object block matrix 532
Auto-recloser matrix 532
Arc-flash matrix 532
General signals matrix 532
Releasing latches 534
Mimic display 535
Local panel configuration 536
Controllable objects 537
Local or remote control 538
Object control with digital inputs 539
Object control with function keys 539
Object control with I and O buttons 540
Timers 541
Logic functions 542
Advanced logic 549
Switchgear control and monitoring 554
Switchgear control and fail-safe position 554
Selecting the trip command and examples of use 555
Programmable switchgear interlocking 557

Local control on single-line diagram 558
Logging and recording functions 559
Time tagging 559
Event buffer 559
Disturbance recording 562
Voltage interruptions 565
Fault data logging 567
Fault recorder 568
Access fault recorder screen 568
Reset fault recorder value 569
InterRelay communication log 570
Running hour counter 571
Maximum and minimum values of the last 31 days and 12 months 572
System clock and synchronisation 573
Monitoring functions 576
Trip circuit supervision (ANSI 74) 576
Description 576
Trip circuit supervision scheme 576
Transformer monitoring (ANSI 26/63) 579
Introduction 579
About setting group 580
Available links to P5 inputs 580
DI signal 581
Blocking input signal 581
Global trip signal 581
Characteristics 581
Circuit breaker monitoring 583
Description 583
Parameters of the CB monitoring function 586
Digital Circuit Breaker monitoring 588
Overview 588
Configuration of Digital Circuit Breaker 590
Monitoring functions 595
Alarms management 599
Control functions of Digital Circuit Breaker 599
Modbus gateway functions 603
Diagnostics functions 603
Current transformer supervision (ANSI 60) 605
Description 605
Block diagram 606
Characteristics 606
Voltage transformer supervision (ANSI 60) 608
Description 608
Block diagram 609
Characteristics 609
PowerLogic P5 and bay condition monitoring 611
Maintenance 612
Safety instructions 612
Self-monitoring 613
Watchdog relay 613

Maintenance/Test LED 613
Purpose of the self-tests 613
List of self-tests 614
Backup memory 616
Preventive maintenance 620
Introduction 620
Intervention frequency 621
Preventive maintenance tasks 622
Arc-flash detection system maintenance 624
Troubleshooting 626
Troubleshooting assistance 626
Troubleshooting the PowerLogic P5 627
Troubleshooting the communication modules 630
Troubleshooting arc-flash system 630
Troubleshooting the MET148-2 module 631
Troubleshooting the Digital Circuit Breaker monitoring 631
Firmware upgrade 633
Replacing the PowerLogic P5 protection relay 634
Change a communication module 637
Return for expert assessment 639
Maintenance of Digital Circuit Breaker 639
Firmware upgrade of EOS-BM100 639
Backup and restore of EOS-BM100/EOS-MCMx00 639
Restore the Zigbee connection 641
Zigbee board firmware upgrade 642
PowerLogic CL110/PowerLogic TH110 replacing 643
Circuit breaker swapping 643
End of life 645
Revision history 646
Order information 652
Protection relay 652
Slot occupation rules 653
Accessories 654

General information

Legal notice

Copyright

2022 Schneider Electric. All rights reserved.

Disclaimer

No responsibility is assumed by Schneider Electric for any consequences arising out of the use of this document. This document is not intended as an instruction manual for untrained persons. This document gives instructions on device installation, commissioning and operation. However, the manual cannot cover all conceivable circumstances or include detailed information on all topics. In the event of questions or specific issues, do not take any action without proper authorisation. Contact Schneider Electric and request the necessary information.

Contact information

35 rue Joseph Monier
92500 Rueil-Malmaison
FRANCE
Phone: +33 (0) 1 41 29 70 00
Fax: +33 (0) 1 41 29 71 00
www.se.com

Purpose

This user manual is intended for electrical power engineering experts, OEMs, system integrators, communication specialists, and general users of the PowerLogic™ P5 protection and control relays.
The complete manual is arranged as follows:

- Preliminary sections, with the details of the manual (how to use it, glossary) and technical data.
- Functions of the protection relay.
  Explanations, diagrams and settings of the protection, control, monitoring and maintenance, measurement, recording and programmable logic functions are detailed in these sections.
- Installation and commissioning.
- Local control panel use, troubleshooting and maintenance instructions.

The following documents complete this manual:

- Quick Start Guide, delivered in the relay package, summarises instructions for installation.
- Communication Manual, for the understanding and the setup of the communication protocols with PowerLogic P5.
- Application Book, for the understanding of specific applications and describing how the PowerLogic P5 protection and control relay functionality can be expanded.

All above documents are accessible at se.com under this link:https://www.se.com/ww/en/product-range/62400-powerlogic-p5-protection-relays/?parent-subcategory-id=86796&filter=business-6-medium-voltage-distribution-and-grid-automation#documents

We welcome your comments about this document. You can reach us by contacting Customer Care Centre Contact page:
http://www.se.com/CCC

Safety information and password protection

Important information

Read these instructions carefully and look at the equipment to become familiar with the device before trying to install, operate, service or maintain it. The following special messages may appear throughout this manual or on the equipment to warn of potential hazards or to call attention to information that clarifies or simplifies a procedure.

The addition of this symbol to a "Danger" or "Warning" safety label indicates that an electrical hazard exists which will result in death or serious injury if the instructions are not followed.

This is the safety alert symbol. It is used to alert you to potential personal injury hazards. Obey all safety messages that follow this symbol to avoid possible injury or death.

DANGER

DANGER indicates an imminently hazardous situation which, if not avoided, will result in death or serious injury.

Failure to follow these instructions will result in death or serious injury.

WARNING

WARNING indicates a potentially hazardous situation which, if not avoided, can result in death or serious injury.

Failure to follow these instructions can result in death, serious injury, or equipment damage.

CAUTION

CAUTION indicates a potentially hazardous situation which, if not avoided, can result in minor or moderate injury, or equipment damage.

Failure to follow these instructions can result in injury or equipment damage.

NOTICE

NOTICE is used to address practices not related to physical injury.

Failure to follow these instructions can result in equipment damage.

FCC Part 15 Notice

This device complies with Part 15 of the FCC Rules. Operation is subject to the following two conditions: (1) this device may not cause harmful interference, and (2) this device must accept any interference received, including interference that may cause undesired operation.

NOTE: This equipment has been tested and found to comply with the limits for a Class B digital device, pursuant to part 15 of the FCC Rules. These limits are designed to provide reasonable protection against harmful interference in a residential installation. This equipment generates, uses and can radiate radio frequency energy and, if not installed and used in accordance with the instruction, may cause harmful interference to radio communications. However, there is no guarantee that interference will not occur in a particular installation. If this equipment does cause harmful interference to radio or television reception which can be determined by turning the equipment off and on, the user is encouraged to try to correct interference by one or more of the following measures:

- Reorient or relocate the receiving antenna.
- Increase the separation between the equipment and receiver.
- Connect the equipment into an outlet on circuit different from that to which the receiver is connected.
- Consult the dealer or an experienced radio/TV technician for help.

Any change or modification of the product not expressly approved by the party responsible for compliance could void the user's authority to operate the equipment.

IC

English: Under Industry Canada regulations, this radio transmitter may only operate using an antenna of a type and maximum (or lesser) gain approved for the transmitter by Industry Canada. To reduce potential radio interference to other users, the antenna type and its gain should be so chosen that the equivalent isotopically radiated power (e.i.r.p.) is not more than that necessary for successful communication.

This device complies with Industry Canada licence-exempt RSS standard(s). Operation is subject to the following two conditions: (1) this device may not cause interference, and (2) this device must accept any interference, including interference that may cause undesired operation of the device.

French: Conformément à la réglementation d'Industrie Canada, le présent émetteur radio peut fonctionner avec une antenne d'un type et d'un gain maximal (ou inférieur) approuvé pour l'émetteur par Industrie Canada. Dans le but de réduire les risques de brouillage radioélectrique à l'intention des autres utilisateurs, il faut choisir le type d'antenne et son gain de sorte que la puissance isotrope rayonnée équivalente (p.i.r.e.) ne dépasse pas l'intensité nécessaire à l'établissement d'une communication satisfaisante.

Le présent appareil est conforme aux CNR d'Industrie Canada applicables aux appareils radio exempts de licence. L'exploitation est autorisée aux deux conditions suivantes : (1) l'appareil ne doit pas produire de brouillage, et (2) l'utilisateur de l'appareil doit accepter tout brouillage radioélectrique subi, même si le brouillage est susceptible d'en compromettre le fonctionnement.

Abbreviations

Table 1 - Abbreviations used in the manual

Acronyms	Indication
Ø	Diameter
AC, DC	Alternating Current, Direct Current
ACSI	Abstract Communication Service Interface
AI, AO	Analogue Input, Analogue Output: used in connection with the number of input and output contacts within the relay and - when necessary - with the slot letter.
ALF	Accuracy Limit Factor
CAE	EcoStruxure Cybersecurity Admin Expert
CB	Circuit Breaker
CS	CyberSecurity
CID	Configured IED Description
CT	Current Transformer
CTS	Current Transformer Supervision
DC	Disconnector
DCD	Device Capabilities Description
DI, DO	Digital Input, Digital Output: used in connection with the number of inputs and output contacts within the relay and - when necessary - with the slot letter.
Digital CB	A dedicated Modbus Master protocol for Digital Circuit Breaker monitoring.
DG	Distributed Generation
DIN rail	Standard metal rail used to mount equipment inside ar rack (DIN for Deutsches Institut für Normung)
DIT	Direct intertrip
DMS	Distribution Management System
EMC	Electromagnetic Compatibility
EOS-BM100	Breaker monitoring module
EOS-MCMx00	Motor controlling module
ES	Earthing Switch
ETH	Ethernet Module
f	frequency
FC	Function Code
FO	Fibre Optic
G_D	Threshold of independent time operation.
GOOSE	Generic Object Oriented Substation Events: in IEC 61850, type of generic substation event, for a peer-to-peer communication over Ethernet.
HMI	Human Machine Interface
HSR	High availability Seamless Redundancy
ICD	IED Capability Description
ICT	Inductive Current Transformer
IEC	International Electrotechnical Commission prepares and publishes international standards for electrical and electronics technology.
IED	Intelligent Electronic Device
IN.CSH	Measured neutral current from CSH core-balance CT
IN.CSH.nom	Neutral CSH CT primary nominal
IN.calc	Calculated neutral current from 3 phase currents

Table 1 - Abbreviations used in the manual (Continued)

Acronyms	Indication
IN.meas	Measured neutral current from standard 1A/5A current inputs
IN.nom	Standard neutral CT primary nominal
IN.sens	Measured neutral current from sensitive 1A input
IN.sens.nom	Sensitive neutral CT primary nominal
IVT	Inductive Voltage Transformer
I/O	Input/Output (e.g. 6I/4O: 6 inputs, 4 outputs): used in connection with the number of inputs and output contacts within the relay.
In	Phase CT primary nominal
Inom	Phase CT primary nominal
IRIG-B	Inter-Range Instrumentation Group time code B: standard for time transfer
LC	"Lucent Connector": type of optical connector
LED	Light Emitting Diode
LPCT	Low Power Current Transformer
LPIT	Low Power Instrument Transformer
LPVT	Low Power Voltage Transformer
LV, MV	Low Voltage, Medium Voltage
max.	Maximum
MSW	Motorised Switch
NERC	North American Electric Reliability Corporation
NI	Network Input
P2P	Peer-to-Peer
PCT	Protective Conductor Terminal (earth/ground)
PIT	Permissive intertrip
PLC	Programmable Logic Controller
POC	Primary Operating Current
PRP	Parallel Redundancy Protocol
Pnom	Active nominal power
pu	Base unit which equals to primary nominal value
QR code	Quick Response code: two-dimensional barcode.
RBAC	Role Based Access Control: provides a restricting access to authorised users only (Cybersecurity).
RCA	Relay Characteristic Angle
Ref	Reference
REF	Restricted Earth Fault
RH	Relative Humidity
RJ45	Standardised type of connector (eight-wire connector) used for Ethernet networking (Registered Jack)
RMS	Root Mean Square
RoCoF	Rate of Change of Frequency
RS485 (or EIA-485)	Standard defining the electrical characteristics of a serial communication interface.
RSTP	Rapid Spanning Tree Protocol: communication protocol
RTC	Real Time Clock

Table 1 - Abbreviations used in the manual (Continued)

Acronyms	Indication
RTD	Resistance Temperature Detector
RTU	Remote Terminal Unit
SCADA	Supervisory Control And Data Acquisition
SDLC	Synchronous Data Link Control communication protocol
SFP	Small Form-factor Pluggable
SFTP/FTP	Secured File Transfer Protocol/File Transfer Protocol
SOL	Selective Overcurrent Logic
SRL	Serial Module
ST (BFOC)	Straight Tip (Bayonet Fibre Optic Connector): type of optical connector
Snom	Apparent nominal power
TCS	Trip Circuit Supervision
THD	Total Harmonic Distortion
TLS	Transport Layer Security
TP	Time Protocol: communication protocol
UFLS	Underfrequency Load Shedding
Un	Phase VT primary nominal
USB	Universal Serial Bus
VI	Virtual Input
VN.calc	Calculated neutral voltage from 3 phase voltages
VN.meas	Measured neutral voltage from neutral voltage input
VO	Virtual Output
VT	Voltage Transformer
VTS	Voltage Transformer Supervision
VA.nom	Nominal auxiliary voltage
Vnom	VT primary nominal (PP)
Vnom/√3	VT primary nominal (PN)

Description of the document versions

The document version rule was upgraded since the version P5/EN/M/02-501A to help in understanding of the firmware version the user manual serves for. The document version is composed by the following information:

- The product, for example, P5 stands for PowerLogic P5.
- The language and standard definition: EN, FR, IT, ES, PT, RU, CN, ANSI, and so on. By default IEC standard applies. ANSI version is always published in English language.
- The type of the document: M for manual, C for communication manual, A for application book.
- The major version of the firmware.
- The release version of the firmware.
- The document version, which loops from A to Z for a dedicated release version.

The table below introduces in detail the components of document version and their meanings:

Product	Language and standard	Type of document	Firmware major version	Firmware release version	Document version
P5	EN (IEC)	**M**anual	V**01**	500	**A**
	FR (IEC)	**C**ommunication manual	V**02**	501	B
	ES (IEC)	**A**pplication book	…	502	C
	PT (IEC)	…		503	D
	IT (IEC)			…	E
	CN (IEC)				F
	RU (IEC)				G
	ANSI (US)				H
	…				…

According to the above table, the version “P5/EN/M/02-501A” stands for the user manual of PowerLogic P5 in English, for the firmware version V02.501, since this is the first version of user manual of this firmware, the document version is A.

For the firmware versions the earlier user manual versions served for, please refer to Revision history, page 646.

Range description

PowerLogic P5 is a family of digital protection and control relays for medium voltage distribution networks dedicated to:

- Buildings and Industry:
  - Data centers
  - Retails
  - Hotels
  - Health care
  - Education and research
  - Transportation
  - Industrial buildings
- Utilities: energy distribution
- Large sites:
  - Oil and Gas
  - Mining
  - Mineral and Metals
  - Water

PowerLogic P5 protection and control relays are based on proven technology concepts developed in close cooperation with customers and available in two sizes.

- The PowerLogic P5x20 is housed in 20TE casing. It offers up to 16 digital inputs and up to 9 output contacts, one Ethernet and one serial communication port[1]. P5x20 can realize feeder, motor or transformer applications with Universal model (P5U20) and voltage/frequency applications with Voltage model (P5V20).
- The PowerLogic P5x30 is housed in 30TE casing. It offers up to 40 digital inputs and up to 16 output contacts, two Ethernet and one serial communication port[2]. P5x30 can realize feeder (P5F30), motor (P5M30), transformer differential (P5T30), and line differential (P5L30) applications. PowerLogic P5x30 offers in-built arc flash protection.

PowerLogic P5 protection relays have been designed around user-friendliness, a feature which is proven in our customer reports day after day.

- A complete set of protection functions, related to the application
- Optional arc detection (for PowerLogic P5x30) by point sensors
- Dedicated circuit breaker control with Mimic, push buttons, programmable function keys, customisable LEDs and alarm
- Multilingual local panel display for customised messaging
- eSetup Easergy Pro software for setting parameters, configuring and network fault simulation
- Both serial and Ethernet communication, including redundancy and precision time synchronisation
- Compliant with IEC 61850 edition 1 and 2 standard
- Cybersecurity functionalities
- Back-up memory for fast and easy replacement
- Withdrawability for maintenance

Easergy to PowerLogic renaming

Schneider Electric, driven by its “Customer First” Core Value is fully committed to easing the customer experience with our portfolio on all fronts. With this core mission in mind, the decision of optimizing the number of brands has been taken across the entire digital Schneider Electric portfolio, to provide a more cohesive and consistent presentation of our offers across different Divisions, bringing a

1. Maximum configuration is 16DI/7DO+WD or 9DI/8DO+WD depending on the boards selected.
2. Maximum configuration is 40DI/15DO+WD or 19DI/18DO+WD depending on the boards selected.

simpler and customer-centric approach, that will facilitate the navigation through all the breadth and depth of our offers and that will be a key enabler for an optimised digitization experience.

This brand optimization initiative affects Protection & Control portfolio including Easergy P5 protection and control relays. The Easergy P5 has been renamed to PowerLogic P5. It is essential to emphasize that this renaming change exclusively affects the brand name of the products and will have absolutely no consequence on the current performances, specifications, characteristics, and/or quality of the product, which remain totally unaffected by this brand name migration.

During the brand transition project, it may happen that the application of this change to different parts of the offer goes effective with different time schedules. There is absolutely no difference between Easergy and PowerLogic branded P5 products and accessories. Easergy accessories can be used with PowerLogic P5 product as long as the commercial reference is matching. The commercial references have not changed along with renaming of the offer. eSetup Easergy Pro and CET850 remain the software to configure PowerLogic P5 protection and control relays.

Introduction

Selection guide by application

Table 2 - PowerLogic P5 protection relay selection guide

		PowerLogic P5x20			PowerLogic P5x30			
Voltage		-		P5V20	-		-	-
Feeder		P5U20		-	P5F30		-	-
Transformer					-		P5T30	-
Motor					P5M30		-	-
Line		-		-	-		-	P5L30
Characteristics								
Ana-logue inputs	Phase current	1/5A CT (x3)	LPCT (x3)	-	1/5A CT (x3)	LPCT (x3)	1/5A CT (x6)	1/5A CT (x3)
	Neutral current	1/5A CT & 1A CT or CSH	CSH	-	1/5A CT & 1A CT or CSH	CSH	1/5A CT (x2)	1/5A CT & 1A CT or CSH
	Voltage	-	LPVT (x4)[3]	VT (x4)	VT (x4)	LPVT (x4)[3]	VT (x1)	VT (x4)
Arc-flash sensor inputs		-			0 to 6 point sensors			
Digital	Inputs	4 to 16			4 to 40			
	Outputs	3 to 8 + watchdog			3 to 18 + watchdog			
Temperature sensor inputs		0 to 16 (external modules)		-	0 to 16 (external modules)			
Front ports	Mini-USB port for configuration tool	■			■			
	USB port for USB key	■			■			
Communication								
Rear ports	Extension port with backup memory	■			■			
	Serial port	■			■			
	Ethernet port	■			■			
	2nd Ethernet port	-			■			
	InterRelay module	-			■			
Proto-cols	IEC 61850 Ed.1 and Ed.2	■			■			
	IEC 60870-5-103	■			■			

3. Resistive divider or capacitive divider LPVTs can be connected to the PowerLogic P5 protection relay.

Table 2 - PowerLogic P5 protection relay selection guide (Continued)

		PowerLogic P5x20	PowerLogic P5x30
	IEC 60870-5-101	■	■
	DNP3 serial and Ethernet	■	■
	Modbus slave serial and Ethernet	■	■
	Modbus master	■	■
	EtherNet/IP	■	■
	Digital CB	■	■
	SDLC	-	■
	Zigbee 3.0	■	■
Redundancy protocols	RSTP	■	■
	PRP	■	■
	HSR	■	■
Time synchronisation	Pulse, IRIG-B	■	■
	SNTP, PTP IEEE 1588-2008 / IEC 61588:2009	■	■
Others			
Control		6 controlled + 2 monitored objects	
Logic	Matrix	■	
	Logic equations	■	
	Advanced logic compliant IEC 61131-3 and IEC 61499	■	
Cybersecurity		RBAC according to IEC 62351 standard IEC 62443-4 Security Level 1	
Withdrawability		■	

Function table

Table 3 - PowerLogic P5 protection relay function selection table

	IEC 61850 Logical node[4]	ANSI code	P5U20 CT variant	P5U20 LPCT/ LPVT variant	P5V20 VT variant	P5F30 CT/VT variant LPCT/ LPVT variant	P5M30 CT/VT variant LPCT/ LPVT variant	P5T30 CT/VT variant	P5L30 CT/VT variant
Protection functions									
Non-directional/directional phase overcurrent[5]	OC**PTOC**x	50/51/ 67	6[6]	6	-	6	6	6	6
Non-directional/directional earth/ ground fault overcurrent[7]	DEFU**PTOC**x [8] P5DEF**PTOC**x	50N/ 51N/ 67N	6	6	-	6	6	6	6
Wattmetric earth/ground fault	EF**PDOP**x	32N	-	-	-	2	2	-	2
Transient intermittent earth/ ground fault	IOIO**PTEF**1	67NI	-	-	-	1	-	-	1
Capacitor bank unbalance	CAP**PTOC**x	51C	2	-	-	2	-	-	-
Negative sequence overcurrent	NEG**PTOC**x	46	2	2	-	2	2	2	2
Unbalance overcurrent, broken conductor	UIBC**PTOC**1	46BC	2	2	-	2	2	2	2
Cold load pick up (CLPU)	CLP**PIOC**1		1	1	-	1	1	-	1
Selective overcurrent logic (SOL)	SOL**PIOC**1	68	1	1	-	1	1		1
Switch On To fault (SOTF)	SOTF**PIOC**1	50HS	1	1	-	1	1	-	1
5th harmonic detection	HAR5**PTOC**1	68H5	1	1	-	1	1	-	1
Circuit breaker failure	CBFP**PIOC**x	50BF	1	1	1	1	1	2	1
Directional power	REVP**PDOP**1 P5REVP**PDOP**2	32	-	2	-	2	2	-	2
Fault locator	FL**RFLO**1	21FL	-	-	-	1	-	-	1
Auto-Recloser	AR**RREC**1	79	1	1	-	1	-	-	1
Arc-flash protection	ARCM**PIOC**x	50ARC	-	-	-	8	8	8	8
Thermal overload protection for motor	THM**PTTR**1	49M	1	1	-	-	1	-	1
Thermal overload protection for feeder	THF**PTTR**1	49F	1	1	-	1	-	1	1
Temperature monitoring	RTD**GAPC**x	38	16	16	-	16	16	16	16
Phase undercurrent	UC**PTUC**x	37	1	1	-	1	1	-	1
Motor start-up supervision, locked rotor	STAL**PMSS**1 P5LR**PMSS**1	48/ 51LR	1	1	-	-	1	-	-
Motor restart inhibition	FST**PMRI**1	66	1	1	-	-	1	-	-
Motor speed detection[9]	MSPD**PMSS**1		1	1	-	-	1	-	-
Motor overspeed[9]	MOT**POVS**x	12	2	2	-	-	2	-	-
Motor underspeed[9]	MOT**PZSU**x	14	2	2	-	-	2	-	-
Motor Anti-backspin ABS[9]	MABS**PMSS**1	ABS	1	1	-	-	1	-	-

4. The x at the end of the logical node name in this column corresponds to the number of the stages of protection functions and the number of the objects for control and monitoring functions.
5. Only non-directional phase overcurrent is available in P5U20 and P5T30.
6. Non-directional only
7. Only non-directional earth/ground fault overcurrent is available in P5U20.
8. Dedicated for P5U20.
9. This protection function is only available when 12I4O module is fitted in the PowerLogic P5 protection relay.

Table 3 - PowerLogic P5 protection relay function selection table (Continued)

	IEC 61850 Logical node[10]	ANSI code	P5U20 CT variant	P5U20 LPCT/ LPVT variant	P5V20 VT variant	P5F30 CT/VT variant LPCT/ LPVT variant	P5M30 CT/VT variant LPCT/ LPVT variant	P5T30 CT/VT variant	P5L30 CT/VT variant
Emergency restart	EMG**PMSS**1		1	1	-	-	1	-	-
Inrush detection	ID**PHAR**1	68H2	1	1	-	1	1	2	1
Overvoltage	OV**PTOV**x	59	-	3	3	3	3	-	3
Undervoltage	UV**PTUV**x	27	-	3	3	3	3	-	3
Positive sequence undervoltage	UVPS**PTUV**x	27P	-	-	2	-	2	-	-
Capacitor overvoltage	CAP**PTOV**1	59C	1	-	-	1	-	-	1
Neutral overvoltage	UO**PTOV**x	59N	-	3	3	3	3	3	3
Overfrequency	OF**PTOF**x	81O	-	2	2	2	2	-	2
Underfrequency	UF**PTUF**x	81U	-	8	8	8	8	-	8
Rate of Change of Frequency (RoCoF)	DFDT**PFRC**x	81R/ 81FR	-	9	9	9	-	-	9
Synchro-check	**RSYN**1	25	-	-	1	1	-	-	1
Lockout relay		86	1	1	1	1	1	1	1
Programmable stages	PS**GAPC**x	99	8	8	8	8	8	8	8
Programmable curves			3	3	3	3	3	3	3
Negative sequence overvoltage	NEG**PTOV**x	47	-	2	2	2	2	-	2
Neutral admittance	EF**PADM**x	21YN	-	-	-	2	2	-	2
Restricted earth fault (low impedance)	REF**PDIF**1	64REF	1[11]	-	-	1[11]	1[11]	2[11]	1[11]
Restricted earth fault with external connection (high-impedance)		87N	A[11]	-	-	A[11 12]	A[11 12]	A[11 12]	A[11 12]
High impedance busbar differential		87BB	A[11 12]	-	-	A[11 12]	A[11 12]	A[11 12]	-
Line differential protection		87L	-	-	-	-	-	-	1
Transformer differential protection (2-winding transformer differential)		87T	-	-	-	-	-	1	-
Transformer overfluxing protection	TVF**PVPH**x	24	-	-	-	-	-	3	-
Voltage-controlled overcurrent		51V	A[12]	A[12]	-	A[12]	A[12]	-	A[12]
Setting groups			4	4	4	4	4	4	4
Monitoring functions									
CT supervision	CTS**GGIO**1	60	1	1	-	1	1	2	1
VT supervision	VTS**GGIO**1	60	-	1	1	1	1	-	1
Trip circuit supervision		74	1	1	1	1	1	2	1
Transformer monitoring	TRF**SIML**x	26/63	2	2	-	2	2	2	-
Circuit breaker monitoring	CBWA**GGIO**1		1	1	-	1	1	1	1
Relay monitoring			■	■	■	■	■	■	■

10. The x at the end of the logical node name in this column corresponds to the number of the stages of protection functions and the number of the objects for control and monitoring functions.
11. Only available with conventional (phase or neutral) CTs.
12. Function can be realized by application guidelines.

Table 3 - PowerLogic P5 protection relay function selection table (Continued)

	IEC 61850 Logical node[13]	ANSI code	P5U20 CT variant	P5U20 LPCT/ LPVT variant	P5V20 VT variant	P5F30 CT/VT variant LPCT/ LPVT variant	P5M30 CT/VT variant LPCT/ LPVT variant	P5T30 CT/VT variant	P5L30 CT/VT variant
Digital Circuit Breaker monitoring	BM100**GGIO**1 Main**XCBR**1 Main**SCBR**1 Trip**SCOL**x Close**SCOL**1 RD**XSWI**1 RD**SSWI**1 Spring**SOPM**1 VI**SCBR**1 VIA**SCBR**1 VIB**SCBR**1 VIC**SCBR**1 MCMx00**GGIO**1 MSW**SOPM**x MSW**XSWI**x MSW**SSWI**x	■	■	■	■	■	■	■	■
Control functions									
Switchgear control and monitoring	OBJ**CSWI**x		6	6	6	6	6	6	6
Switchgear monitoring only	OBJ**CSWI**x		2	2	2	2	2	2	2
Programmable switchgear interlocking			■	■	■	■	■	■	■
Local control on single-line diagram			■	■	■	■	■	■	■
Local control with O/I keys			■	■	■	■	■	■	■
Local/remote function			■	■	■	■	■	■	■
Function keys			1	1	1	7	7	7	7
Custom logic (logic equations)			■	■	■	■	■	■	■
Advanced logic engine			■	■	■	■	■	■	■
Control with EcoStruxure Power Device (smartphone, tablet application)			■	■	■	■	■	■	■
Logs and Records									
Sequence of event record			■	■	■	■	■	■	■
Last fault record			■	■	■	■	■	■	■
Disturbance record	DR**RDRE**1		■	■	■	■	■	■	■
Tripping context record			■	■	■	■	■	■	■
Relay maintenance data log			■	■	■	■	■	■	■
Security data log			■	■	■	■	■	■	■

13. The x at the end of the logical node name in this column corresponds to the number of the stages of protection functions and the number of the objects for control and monitoring functions.

Table 3 - PowerLogic P5 protection relay function selection table (Continued)

	IEC 61850 Logical node[14]	ANSI code	P5U20 CT variant	P5U20 LPCT/ LPVT variant	P5V20 VT variant	P5F30 CT/VT variant LPCT/ LPVT variant	P5M30 CT/VT variant LPCT/ LPVT variant	P5T30 CT/VT variant	P5L30 CT/VT variant
Measurement									
RMS current values	RMSA**MMXU**1		■	■	-	■	■	■	■
RMS voltage values	RMSV**MMXU**1		-	■	■	■	■	■[15]	■
RMS active, reactive and apparent power	RMSP**MMXU**1		-	■	-	■	■	-	■
Frequency	VECA**MMXU**x		■	■	■	■	■	■	■
Fundamental frequency current values			■	■	-	■	■	■	■
Fundamental frequency voltage values	VECV**MMXU**1		-	■	■	■	■	■[15]	■
Fundamental frequency active, reactive and apparent power values			-	■	-	■	■	-	■
Power factor	VECP**MMXU**1		-	■	-	■	■	-	■
Phase differential currents			-	-	-	-	-	■	■
Phase bias currents			-	-	-	-	-	■	■
Active and reactive energy values			-	■	-	■	■	-	■
Demand values: phase currents			■	■	-	■	■	■	■
Demand values: active, reactive, apparent power and power factor			-	■	-	■	■	-	■
Maximum demand values: phase currents			■	■	-	■	■	■	■
Minimum and maximum demand values: RMS phase currents			■	■	-	■	■	■	■
Minimum and maximum demand values: active, reactive, apparent power and power factor	SRD**MMXU**x		-	■	-	■	■	-	■
Minimum and maximum demand values over the last 31 days and 12 months: active, reactive and apparent power			-	■	-	■	■	-	■
Minimum and maximum values: currents			■	■	-	■	■	■	■
Minimum and maximum values: voltages			-	■	■	■	■	■[15]	■
Minimum and maximum values: frequency			■	■	■	■	■	■	■
Minimum and maximum values: active, reactive, apparent power and power factor			-	■	-	■	■	-	■
Harmonic values of phase current and THD	HI**MHAI**1 P5THDI**MHAI**1		■	■	-	■	■	■	■
Harmonic values of voltage and THD	HU**MHAI**1 P5THDU**MHAI**1		-	■	■	■	■	■[15]	■
Voltage sags and swells			-	■	■	■	■	■[15]	■

14. The x at the end of the logical node name in this column corresponds to the number of the stages of protection functions and the number of the objects for control and monitoring functions.
15. For 1 voltage.

Technical characteristics

Table 4 - PowerLogic P5 protection relay technical characteristics

Characteristic	Value	
	PowerLogic P5x20	PowerLogic P5x30
Power system frequency		
Rated frequency	50 Hz or 60 Hz	
Power supply		
Operating range	DC: 24 to 250 V DC, ±20% AC: 100 to 230 V AC, ±20%	DC: 48 to 250 V DC, ±20% AC: 100 to 230 V AC, ±20% Optional: DC: 24 to 48 V DC, ±20%
AC frequency operating range	50 Hz, ±10%; 60 Hz, ±10%	
Maximum continuous withstand	300 V DC max, 276 V AC max	
Inrush current for start-up	I < 3 A , t < 5 ms, 100 V AC I < 5 A , t < 6 ms, 230 V AC I < 4 A, t < 6 ms, 48 V DC I < 8 A, t < 4 ms, 250 V DC	
Burden DC	Quiescent stage: 4 W, maximum load: 6 W at 48 V DC Quiescent stage: 4 W, maximum load: 6 W at 250 V DC	Quiescent stage: 8 W, maximum load: 11 W at 48 V DC Quiescent stage: 8 W, maximum load: 11 W at 250 V DC
Burden AC	Quiescent stage: 10 VA, maximum: 15 VA at 230 V AC Quiescent stage: 8 VA, maximum: 10 VA at 100 V AC	Quiescent stage: 20 VA, maximum: 22 VA at 230 V AC Quiescent stage: 13 VA, maximum: 15 VA at 100 V AC
RTC retention time		
RTC retention time	1 month typical[16]	
Phase CT inputs		
CT rated primary current	10 A to 20 kA	
CT rated secondary phase current	1 A or 5 A	
Linear range	60 x CT rated current	
Thermal withstand	Continuous: 20 A; 1 s: 500 A	
Input impedance	< 0.003 Ω	
Burden	< 0.02 VA at 1 A; < 0.5 VA at 5 A	
LPCT inputs		
Nominal current	2.5 A to 20 kA	
LPCT rated primary current	10 A to 5 kA	
LPCT rated secondary voltage	22.5 mV	
Current factor	0.25; 0.50; 1.00; 1.25; 1.33; 2.00; 2.50; 3.20; 4.00; 5.00; 6.30; 6.66; 10; 16; 20; 25; 31.5	
Linear range	45 x Nominal current	
Standard earth/ground fault CT inputs		
CT rated primary current	1 A to 20 kA	
CT rated earth/ground fault current	1 A, 2 A or 5 A	
Linear range	30 x CT rated current	
Thermal withstand	Continuous: 20 A; 1 s: 500 A	

16. This value can be impacted by high temperature exposition during a long time.

Table 4 - PowerLogic P5 protection relay technical characteristics (Continued)

Characteristic	Value	
	PowerLogic P5x20	PowerLogic P5x30
Input resistance	< 0.003 Ω (not connected)	
Burden	< 0.02 VA at 1 A; < 0.08 VA at 2 A; < 0.5 VA at 5 A	
CSH core balance inputs		
CSH rated primary current	2 A or 20 A	
CT ratio	1/470	
Linear range	42.5 x rated primary current	
Thermal input withstand	Continuous: 300 A (primary); 1 s: 18 kA (primary)	
Input impedance	< 0.02 Ω (not connected) < 4 Ω between CSH120, CSH200, CSH300 or GO 110 and the PowerLogic P5 protection relay	
Burden	< 10 mVA at 0.1 A; < 50 mVA at 5 A	
CSH30 core balance inputs		
CT ratio	1/1000; 5/1000	
Burden	< 10 mVA at 0.1 A; < 50 mVA at 5 A	
VT inputs		
VT rated primary voltage	100 V to 500 kV	
VT rated secondary rated range	25 V to 250 V	
Voltage withstand	Continuous: 276 V AC	
Input impedance	> 100 kΩ	
Rated frequency	50 Hz and 60 Hz	
Burden	< 0.05 VA at 75 V; < 0.5 VA at 200 V	
LPVT inputs		
Nominal voltage	18.75 V to 500 kV	
LPVT rated primary voltage	75 V to 500 kV	
LPVT rated secondary voltage	3.25 V / √3	
Voltage factor	0.25 to 1.5	
Digital inputs		
Operating nominal voltage	24 V DC to 250 V DC 90 V AC to 230 V AC	
Voltage threshold	40% to 80% of nominal voltage	
Voltage withstand	300 V DC / 275 V AC	
Common mode insulation	Basic insulation 2500 V DC 1 min	
Reset threshold	20% to 60% of nominal voltage	
Voltage threshold resolution	1%	
Debounce filter[17]	Settable: 0 ms to 100 ms (Default value: 10 ms)	
Threshold accuracy	± 10% of nominal voltage or ± 2 V	
Max. current	< 2 mA	
Input current	Nominal voltage: 24 V to 110 V Inrush: 9.0 mA last 10 ms Continuous: 2.1 mA	
	Nominal voltage: 110.1 V to 220 V Inrush: 4.5 mA last 10 ms	

17. A setting below 10 ms can be used for testing only. It is not recommended during operation.

Table 4 - PowerLogic P5 protection relay technical characteristics (Continued)

Characteristic	Value	
	PowerLogic P5x20	PowerLogic P5x30
	Continuous: 1.3 mA	
Maximum activation time	DC < 1 ms AC < 20 ms	
Reset time	< 0.5 ms	
Debounce time	Adjustable (by software) from 1 ms up to 20 ms, with 1 ms steps	
Burden	< 0.5 W in DC < 0.5 VA in AC	
SFP module		
Transmitter Optical Characteristics		
Output Optical Power 62.5/125 µm NA = 0.275 Fiber		-20.0 dBm ... -14.0 dBm, typical -17.0 dBm[18]
Output Optical Power 50/125 µm NA = 0.20 Fiber		-23.5 dBm ... -14.0 dBm, typical -20.0 dBm[18]
Extinction Ratio		10 dB
Central Wavelength		1270 nm ... 1380 nm, typical 1310 nm
Spectral Width – FWHM		147 nm
Optical Rise Time (10%-90%)		0.6 ns ... 3.0 ns, typical 1.0 ns
Optical Fall Time (10%-90%)		0.6 ns ... 3.0 ns, typical 1.0 ns
Duty Cycle Distortion Contributed by the Transmitter		≤ 0.6 ns[19][20]
Data Dependent Jitter Contributed by the Transmitter		≤ 0.6 ns[20]
Random Jitter Contributed by the Transmitter		≤ 0.69 ns, Peak-to-peak[20] 0.52 ns, typical 1.0 ns, Peak-to-peak, OC-3[21]
Systematic Jitter Contributed by the Transmitter OC-3		Max 1.2 ns, typical 0.25 ns, Peak-to-peak, OC-3[22]
Transmitter Disable (High)		≤ -45 dBm
Receiver Optical and Electrical Characteristics		
Optical Input Power		-31.0 dBm ... -14.0 dBm average power[23] -31.0 ... -14.0 average power, OC-3[23][24]
Operating Wavelength		1270 nm ... 1380 nm
Duty Cycle Distortion Contributed by the Receiver		≤ 0.4 ns[25][20]
Data Dependent Jitter Contributed by the Receiver		≤ 1.0 ns[20]

18. These optical power values are measured over the specified operating voltage and temperature ranges. The average power value can be converted to a peak power value by adding 3 dB.
19. Duty Cycle Distortion contributed by the transmitter is measured at the 50% threshold of the optical output signal.
20. Characterised with PRBS27-1 pattern.
21. Random Jitter contributed by the transmitter is specified with a 155.52 MBit/s (77.76 MHz square-wave) input signal.
22. Systematic Jitter contributed by the transmitter is defined as the combination of Duty Cycle Distortion and Data Dependent Jitter. It's measured with 50% threshold using 2^23-1 PRBS input pattern at 155.52 MBit/s.
23. This specification is intended to indicate the performance of the receiver section of the transceiver when Optical Input Power signal characteristics are present per the following definitions:
    - Over the specified operating temperature and voltage ranges
    - Bit Error Rate (BER) is better than or equal to 1 x 10^{-10}
    - Transmitter is operating to simulate any cross-talk present between the transmitter and receiver sections of the transceiver.
    - Fiber: 62.5/125 µm, NA = 0.275; or 50/125 µm, NA = 0.20
24. Measured per 50/125 µm (NA = 0.2) fiber with a 155.52 MBd (77.76 MHz square-wave) input pattern.
25. Duty Cycle Distortion contributed by the receiver is measured at the 50% threshold of the electrical output signal.

Table 4 - PowerLogic P5 protection relay technical characteristics (Continued)

Characteristic	Value	
	PowerLogic P5x20	PowerLogic P5x30
Random Jitter Contributed by the Receiver		0.10 ns ... 2.14 ns Peak-to-peak[26] 0.10 ns ... 1.91 ns Peak-to-peak, OC-3[27]
Systematic Jitter Contributed by the Receiver OC-3		0.16 ns ... 1.2 ns Peak-to-peak, OC-3[28]
Loss of Signal – De-asserted		≤ -32 dBm average
Loss of Signal – Asserted		≥ -45 dBm average
Loss of Signal – Hysteresis		≥ 0.5 dB, typical 1.8 dB
Control relay outputs **PowerLogic P5x20 power supply DO1 - DO2 - DO3 Slot B** **PowerLogic P5x30 power supply DO2 - DO3 Slot B** **PowerLogic P5x20 5I5O module DO1 - DO2 - DO3 Slot C** **PowerLogic P5x30 5I5O module DO1 - DO2 - DO3 Slot C, D, E** **PowerLogic P5x30 arc-flash module DO1 - DO2 Slot D, E**		
According to IEC 60255-1 and IEC 61810-1		
Contact rated voltage	250 V DC or 230 V AC, 50/60 Hz	
Continuous current	8 A	
Short duration carry current	30 A for 3 s	
Making capacity	10000 operations 1000 W with L/R = 40 ms, 250 V DC 2000 VA 230 V AC Duty cycle 1 s ON, 9 s OFF	
Breaking capacity	10000 operations 50 W with L/R = 40 ms, 250 V DC 2000 VA 230 V AC Duty cycle 1 s ON, 9 s OFF	
Dielectric withstand across normally open contacts	1 kV rms AC for 1 minute	
According to IEEE C37.90 standard		
Make and carry	2000 operations make and carry 30 A DC Duty cycle 200 ms ON, 15 s OFF (current is interrupted by independent means at the end of each ON cycle)	
Dielectric withstand across normally open contacts	1.5 kV rms AC for 1 minute	
Other characteristics		
Making capacity	2000 operations 5 A DC with L/R = 50 ms Duty cycle 1 s ON, 9 s OFF	
Breaking capacity	10000 operations 0.25 A DC with L/R = 50 ms Duty cycle 1 s ON, 9 s OFF	
Short duration making capacity	20 A for 0.5 s; 30 A for 0.2 s	
Minimum making current	10 mA with 50 mW minimum	
Closing/opening time	7 ms (typical value), 3.5 ms + 3.5 ms for contact bounce, resistive load	
Contact material	Ag alloy	
Number of operations unloaded	100000	

26. Characterised with PRBS27-1 pattern.
27. Random Jitter contributed by the Receiver is specified with a 155.52 MBd (77.76 MHz square-wave) input signal.
28. Systematic Jitter contributed by the receiver is definied as the combination of Duty Cycle Distortion and Data Dependent Jitter. It's measured with 50% threshold using 2^23-1 PRBS input pattern at 155.52 MBd.

Table 4 - PowerLogic P5 protection relay technical characteristics (Continued)

Characteristic	Value	
	PowerLogic P5x20	PowerLogic P5x30
High speed, high break control relay output PowerLogic P5x30 power supply DO1 Slot B PowerLogic P5x20 5I5O module DO4 - DO5 Slot C PowerLogic P5x30 5I5O module DO4 - DO5 Slot C, D, E		
According to IEC 60255-1 and IEC 61810-1		
Contact rated voltage	250 V DC, 50/60 Hz	
Continuous current	10 A	
Short duration carry current	30 A for 3 s	
Making and breaking capacity	10000 operations 2500 W with L/R = 40 ms 250 V DC Duty cycle 1 s ON, 9 s OFF	
Dielectric withstand across normally open contacts	None – due to Solid State Devices across normally open contact	
According to IEEE C37.90 standard		
Make and carry	2000 operations make and carry 30 A DC Duty cycle 200 ms ON, 15 s OFF (current is interrupted by independent means at the end of each ON cycle)	
Dielectric withstand across normally open contacts	None – due to Solid State Devices across normally open contact	
Other characteristics		
Making capacity	2000 operations 5 A DC with L/R = 50 ms	
Breaking capacity	10000 operations 0.25 A DC with L/R = 50 ms	
Short duration making capacity	20 A for 0.5 s; 30 A for 0.2 s	
Minimum making current	10 mA with 50 mW minimum	
Closing time	1 ms (typical value) for the high-speed contact relay DO1 (PowerLogic P5x30)	
Opening time	20 ms (typical value), resistive load	
Contact material	Ag alloy	
Number of operations unloaded	100000	

Table 4 - PowerLogic P5 protection relay technical characteristics (Continued)

Characteristic	Value	
	PowerLogic P5x20	PowerLogic P5x30
Signalling relay outputs **Watchdog power supply, Slot B** **PowerLogic P5x20 6I4O/12I4O module all DOs Slot C** **PowerLogic P5x30 6I4O/12I4O module all DOs Slot C, D, E** **PowerLogic P5x30 arc-flash module DO3 Slot D, E**		
According to IEC 60255-1 and IEC 61810-1		
Contact rated voltage	250 V DC or 230 V AC, 50/60 Hz	
Continuous current	2 A	
Short duration carry current	30 A for 200 ms	
Making capacity	10000 operations 1000 W with L/R = 40 ms 250 V DC 1150 VA 230 V AC Duty cycle 1 s ON, 9 s OFF	
Breaking capacity	10000 operations 30 W with L/R = 40 ms 250 V DC 1150 VA 230 V AC Duty cycle 1 s ON, 9 s OFF	
Dielectric withstand across normally open contacts	1 kV rms AC for 1 minute	
Other characteristics		
Making and breaking capacity	10000 operations 1 A DC with L/R = 20 ms	
Minimum making current	10 mA with 50 mW minimum	
Closing/opening time	7 ms (typical value) 3.5 ms + 3.5 ms for contact bounce, resistive load	
Contact material	Ag alloy	
Number of operations unloaded	100000	
Size and weight		
Size (Width x Height x Depth)	102/180/224 mm (4.01/7.08/ 8.82 in)	152.4/180/224 mm (6/7.08/8.82 in)
Weight	≤ 2.5 kg (5.51 lb)	≤ 3.3 kg (7.28 lb)

NOTE:

Control relay outputs, both conventional hinged-armature relays and high speed, high break outputs, should be used for operating the open (trip) and close control circuits of the circuit breaker and for circuits with similar high requirements regarding make, carry and break currents.

It is worthy to note,

- the signaling of the raising edge (“make”) with high speed output is at least 5 ms faster than with conventional hinged-armature relay output;
- the signaling of the falling edge (“break”) with high speed output is at maximum 15 ms slower than with conventional hinged-armature relay output.

Such differences also need to be considered in the set up of protection scheme timing.

Signalling relay outputs should be used for conventional transfer of digital data to other secondary equipment or control systems, where requirements for make, carry and break of currents are low. Also, such outputs are often wired with common return, to allow more output signals with a given (limited) number of terminal contacts.

Environmental characteristics

⚠WARNING

UNEXPECTED OPERATION

Install PowerLogic P5 according to the environmental characteristics described in the table below.

Failure to follow these instructions can result in death, serious injury, or equipment damage.

According to the informative annex of IEC 60255-1 standard edition 2, all the environmental tests are performed at the minimum settings which helps ensure the robustness of the PowerLogic P5 protection relay.

The digital inputs have been tested with 10 ms of debounce filter.

Table 5 - PowerLogic P5 protection relay environmental characteristics

Characteristic	Description/Value		
Power Supply			
Characteristics	**Standard**	**Level/Class**	**Value**
Voltage dips (DC)	IEC 61000-4-29 GOST 30804.4		500 ms voltage dips 0%, 250 V DC and above, Criteria A; 150 ms voltage dips 0%, 110 V DC; 100 ms voltage dips 0%, 48 V DC; 50 ms voltage dips 0%, 24 V DC
Ripple (DC)	IEC 61000-4-17		15%; 100 Hz / 120 Hz, Criteria A
Voltage dips (AC)	IEC 61000-4-11 GOST 30804.4		Criteria A, 30 cycles, voltage dips 0%, 230 V AC; 10 cycles, voltage dips 0%, 110 V AC
Product Safety			
Insulation Characteristics	**Standard**		**Value**
Insulation resistance	IEC 60255-27		> 100 MΩ at 500 V DC Using only electronic/brushless insulation tester.
Protection class	IEC 60255-27	Class I	
Creepage distances and clearances	IEC 60255-27		Pollution degree 2, Overvoltage category III
High voltages withstand (dielectric)	IEC 60255-27		2 kV rms AC, 1 min: between all case terminals connected together, and the case earth/ground; 2 kV rms AC, 1 min: between all terminals of independent circuits; 1 kV rms AC for 1 min: across normally open control and signalling contacts; 1.5 kV DC for 1 min; communication port; None for High Speed, High Break control relay output due to solid state devices across normally open contact.
	IEEE C37.90		1.5 kV rms AC for 1 min: across open tripping contacts
Impulse voltage	IEC 60255-27		5 kV, 1.2/50 µs, 0.5 J between all terminals of independent circuits, and all terminals and case earth/ground.

Table 5 - PowerLogic P5 protection relay environmental characteristics (Continued)

Characteristic	Description/Value		
Electromagnetic Compatibility			
Characteristics	**Standard**	**Level/Class**	**Value**
Emission test			
Radiated disturbances	CISPR32 CISPR11 IEC 60255-26 GOST 30805.22	Class A	
	IACS E10		For equipment installed in the general power distribution zone.
Conducted disturbances	CISPR32 IEC 60255-26 GOST 30805.22	Class A	
	IACS E10		For equipment installed in the general power distribution zone.
Radiated disturbances immunity tests			
Radiated radio frequency fields	IEC 61000-4-3	Level 3	10 V/m, 80 MHz to 6 GHz, 80% AM (1 kHz)
	ANSI C37.90.2		20 V/m, 80 MHz to 1GHz, 80% AM (1 kHz)
	GOST R 50746		10 V/m, 80 MHz to 1 GHz AM 80% (1 kHz and pulse 200 Hz) 30 V/m, 800 MHz to 960 MHz/1.4 GHz to 6 GHz
	IACS E10	Level 3	10 V/m, 100 kHz and 1 MHz, 2 s
Electrostatic discharges	IEC 61000-4-2	Level 4	15 kV air, 8 kV contact
	ANSI C37.90.3		15 kV air, 8 kV contact
Magnetic field at power frequency	IEC 61000-4-8	Level 5	100 A/m continuous; 1000 A/m, 1 to 3 s
Pulse magnetic fields	IEC 61000-4-9	Level 5	1000 A/m
Oscillatory magnetic fields	IEC 61000-4-10	Level 5	100 A/m, 100 kHz and 1 MHz
Conducted Radio Frequency disturbances			
Conducted Radio Frequency disturbance	IEC 61000-4-6	Level 3	10 V rms common mode, 0.15 MHz to 80 MHz, 80% AM (1 kHz)
Fast transient bursts[29]	IEC 61000-4-4	Level 4	4 kV common mode, 5 kHz, 100 kHz
	ANSI C37.90.1		4 kV, 5 kHz, common mode and transversal mode
	IACS E10		2 kV power supply, 1 kV digital I/O, 5 min, 5 kHz
Slow damped oscillatory waves	IEC 61000-4-18	Level 3	2.5 kV common mode 1 kV differential mode, 100 kHz, 1 MHz
	ANSI C37.90.1		2.5 kV, 1 MHz, common mode and transversal mode
	IEC 61000-4-12 GOST 30804.4.12	Level 3	2 kV common mode; 1 kV, differential mode, 100 kHz, Source impedance: 12 Ω
Fast damped oscillatory waves	IEC 61000-4-18	Level 3	2 kV common mode, 3 MHz, 10 MHz, 30 MHz
Conducted disturbances 0 to 150 kHz	IEC 60255-26	Zone A	150 V rms, differential mode; 300 V rms, common mode.
	GOST 51317.4.6	Level 3	Continuous: 30 V rms Short: 300 V rms 5 Hz – 150 kHz: 30 V rms
Surges[30]	IEC 61000-4-5	Level 4	4 kV, common mode; 2 kV, differential mode

29. ANSI C37.90.1 test passed with 20 ms of digital inputs debounce filter in DC mode, 50 ms of digital inputs debounce filter in AC mode.
30. When protection function 50N/51N/50G/51G/67N is used and IN is measured with CSH core balance CT, it is recommended to use operation time of 50 ms at the lowest pickup value setting.

Table 5 - PowerLogic P5 protection relay environmental characteristics (Continued)

Characteristic	Description/Value		
Harmonics and inter-harmonics (AC)	IEC 61000-4-13	Level 3	Criteria A
Power voltage fluctuation (AC)	IEC 61000-4-14	Level x Level 3	±ΔU 15% for (Un, Un – 10 %Un, Un + 10 %Un) ±ΔU 12% (Un, Un – 10 %Un, Un + 10 %Un)
Fibre optic			
Characteristics	**Standard**	**Level/Class**	**Value**
Electrostatic Discharge (ESD) to the Electrical Pins	MIL-STD-883C		HBM 2 kV
Electrostatic Discharge (ESD) to the Duplex LC Receptacle	Variation of IEC 61000-4-2		Typically withstand at least 25 kV without damage when the LC connector receptacle is contacted by a Human Body Model probe.
Electromagnetic Interference (EMI)	CENELEC CEN55022	Class B	System margins are dependant on customer board and chassis design.
Immunity	Variation of IEC 61000-4-3		Typically shows a negligible effect from a 10 V/m field swept from 80 to 450 MHz applied to the transceiver without a chassis enclosure.
Eye Safety	EN60825-1 (+A11)	AEL Class 1	Compliant per Avago testing under single fault conditions.
RoHS Compliance			Reference to EU RoHS Directive 2015/863/EU
Environmental conditions			
Operation			
Characteristics	**Standard**	**Test Method**	**Value**
Exposure to cold	IEC 60068-2-1	Ae	-40°C (-40°F), 96 hours.
Exposure to dry heat	IEC 60068-2-2	Be	+70°C (+158°F), 96 hours; +85°C (+185°F), 16 hours
Exposure to damp heat	IEC 60068-2-78	Cab	40 °C (+104 °F), 93% ± 3% RH, 56 days, without condensation
Temperature variation	IEC 60068-2-14	Nc	-40°C to +70°C (-40°F to +158°F), 10°C/min (18°F/min) 96 hours
Damp heat cyclic test	IEC 60068-2-30	Db Variant 1	55°C (131 °F), 93% ± 3% RH and 25°C (77 °F), 97% -2% +3% RH, with condensation, 6 cycles (12 h + 12 h)
Storage			
Exposure to cold	IEC 60068-2-1	Ab	-40°C (-40°F), 96 hours
Exposure to dry heat	IEC 60068-2-2	Bb	+85°C (+185°F), 96 hours
Exposure to damp heat	IEC 60068-2-78	Cab	40 °C (+104°F), 93% ± 3% RH, 21 days
Temperature variation	IEC 60068-2-14	Nc	-40°C to +70°C (-40°F to +158°F) transfer time: 10°C/min (18°F/min), 96 hours
Corrosive atmosphere			
Salt mist	IEC 60068-2-52	Kb Severity 1	4 spraying periods of 2 hours with a storage of 7 days after each
2 Gas	IEC 60068-2-60	Ke	+25°C (+77°F), 75% RH, 21 days, method 1: 0.5 ppm SO_2; 0.1 ppm H_2S.
4 Gas	IEC 60068-2-60	Ke	+25°C (+77°F), 75% RH, 21 days, method 4: 1.85 ppm SO_2; 2.1 ppm H_2S; 0.1 ppm Cl_2; 1.56 ppm NO_2. (according to IEC 60721-3-3 level 3C3 concentration)
Mechanical Robustness			
Characteristics	**Standard**	**Level**	**Value**
In operation (flush mounted case with REL51032: panel mounting kit with flush mounting accessory)			
Vibrations	IEC 60255-21-1	Class 2	1 Gn, 10 Hz to 150 Hz
	GOST 17516.1		0.015 mm peak, 0.5 Hz to 57.6 Hz

Table 5 - PowerLogic P5 protection relay environmental characteristics (Continued)

Characteristic	Description/Value		
			1 Gn, 57.6 Hz to 150 Hz
	IACS E10		2 Hz to 13.2 Hz - amplitude ±1mm 13.2 Hz to 100 Hz - acceleration ±0.75 Gn
Shocks	IEC 60255-21-2	Class 2	10 Gn, 11 ms
Earthquakes	IEC 60255-21-3	Class 2	2 Gn horizontal; 1 Gn vertical
Storage (flush mounted case with REL51032: panel mounting kit with flush mounting accessory)			
Vibration	IEC 60255-21-1	Class 2	2 Gn, 10 Hz to 150 Hz
	GOST 17516.1		2 Gn, 0.5 Hz to 150 Hz
Shocks	IEC 60255-21-2	Class 2	30 Gn, 11 ms
Bumps	IEC 60255-21-2	Class 2	20 Gn, 16 ms

Table 5 - PowerLogic P5 protection relay environmental characteristics (Continued)

Characteristic	Description/Value		
Enclosure			
Local panel	IEC 62262	IK07	Degree of protection against mechanical impacts
	IEC 60529	IP54	Front panel
		IP54	Mounted in panel with flush mounting accessory
		IP41	Mounted in panel without accessory
	NEMA	Type 12	
Rear panel	IEC 60529	IP20	Except area with ring terminal connection (analogue inputs)
Fire resistance			
Flammability	IEC 60695-11-10		class V-1 minimum
Packaging			
Resistance to shocks by free fall (with packaging)	IEC 60068-2-31		1 m (3.28 ft)
Cybersecurity			
Certification	Achilles[31]	Level I	Certification number: 453–071119
		Level II[32]	Certification number: 500–101420
	IEC 62443-4-1		Security for industrial automation and control systems: Secure product development life-cycle requirements.
	IEC 62443-4-2 Security Level 1 (SL 1)[33] [34]		Security for industrial automation and control systems: Technical security requirements for IACS components.
Certification/declaration			
CE European Commission's directives	EN/IEC 60255-26		Electromagnetic Compatibility (EMC) directive 2014/30/EU
	EN 60255-27/IEC 60255-27		Electrical Equipment (Safety) directive 2014/35/EU
	EN IEC 63000/IEC 63000		Restriction of the Use of Certain Hazardous Substances in Electrical and Electronic Equipment (ROHS) directive 2015/863/EU
	ETSI EN 300 328 (V2.2.2)		Radio Equipment Directive 2014/53/UE
	ETSI EN 301 489-1 (V2.2.3)		
	ETSI EN 301 489-17 (V3.2.4)		
UL Standards	UL 508 ANSI/IEEE C37.90 CAN/CSA C22.2 No.14		File E354250, NRGU
Eurasian Customs Union	EAЭC RU C-FR.HA46.B.05269/22		Hardware variants with P5xxx-xxxx-xxxx-xxxH

31. Zigbee communication protocol is not included in the Achilles certification.
32. EtherNet/IP protocol is not included in Level II certification.
33. PowerLogic P5 with Advanced Cybersecurity level enabled and Cybersecurity Admin Expert (CAE) is certified.
34. Zigbee communication protocol available thru communication modules REL51068 and REL51044 is not yet included in this certification.

Table 5 - PowerLogic P5 protection relay environmental characteristics (Continued)

Characteristic	Description/Value	
UK CA United Kingdom regulations	BS EN 60255-26/IEC 60255-26	Electromagnetic Compatibility (EMC) regulations SI 2016 No. 1091
	BS EN 60255-27/IEC 60255-27	Electrical Equipment (Safety) regulations SI 2016 No. 1101
	BS EN IEC 63000/IEC 63000	Restriction of the Use of Certain Hazardous Substances in Electrical and Electronic Equipment (ROHS) regulations SI 2012 No. 3032
	ETSI EN 300 328 (V2.2.2)	Radio Equipment Regulations SI 2017 No. 1206
	ETSI EN 301 489-1 (V2.2.3)	
	ETSI EN 301 489-17 (V3.2.4)	
FCC/IC certificate	FCC ID: 2AHP8-JYT46620 IC ID: 21245-JYT46620	Federal regulation part 15

Installation

Safety instructions

This page contains important safety instructions that must be followed precisely before attempting to install, repair, service or maintain electrical equipment. Carefully read and follow the safety instructions described below. Only qualified personnel, equipped with appropriate individual protection equipment, may work on or operate the equipment. Qualified personnel are:

- Familiar with the installation, commissioning, and operation of the equipment and of the system to which it is being connected.
- Able to safely perform switching operations in accordance with accepted safety engineering practices and are authorised to energise and de-energise equipment and to isolate, earth/ground, and label it.
- Trained in the care and use of safety apparatus in accordance with safety engineering practices.
- Trained in emergency procedures (for example, first aid).

⚠⚠DANGER

HAZARD OF ELECTRIC SHOCK, EXPLOSION OR ARC FLASH

- Turn off all power supplying the protection relay and the equipment in which it is installed before working on it.
- Always use a properly rated voltage sensing device to confirm that power is off.
- Apply appropriate personal protective equipment and follow safe electrical work practices. See local regulation.
- Do not install this product in ATEX class 0, 1 and 2 areas.

Failure to follow these instructions will result in death or serious injury.

⚠DANGER

FIRE HAZARD

If you are authorised to withdraw the relay:

- Disconnect the power supply before removing or replacing a module or the withdrawable part of the protection relay.
- Never touch electronic parts.
- Before replacing the withdrawable part, clean all debris and contaminants from the case, the withdrawable part, and the connectors.
- Apply proper tightening torque to all wire connections.

Failure to follow these instructions will result in death or serious injury.

⚠WARNING

UNINTENDED OPERATION

Do not energise the primary circuit before this protection relay is properly configured.

Failure to follow these instructions can result in death, serious injury, or equipment damage.

Protection Class I equipment

Before energising the equipment it must be earthed/grounded using the protective conductor terminal, if provided, or the appropriate termination of the supply plug in the case of plug connected equipment.

The protective conductor (earth/ground) connection must not be removed since the protection against electric shock provided by the equipment would be lost.

When the protective (earth/ground) conductor terminal (PCT) is also used to terminate cable shields, etc., it is essential that the integrity of the protective (earth/ground) conductor is checked after the addition or removal of such functional earth/ground connections. For M4 stud PCTs the integrity of the protective (earth/ground) connections should be ensured by use of a locknut or similar.

The recommended minimum protective conductor (earth/ground) wire size is 2.5 mm² (AWG 14) (3.3 mm² (AWG 12) for North America) unless otherwise stated in the technical data section of the equipment documentation, or otherwise required by local or country wiring regulations.

The protective conductor (earth/ground) connection must be low-inductance and as short as possible.

All connections to the equipment must have a defined potential. Connections that are pre-wired, but not used, should preferably be grounded when digital inputs and output relays are isolated. When digital inputs and output relays are connected to common potential, the pre-wired but unused connections should be connected to the common potential of the grouped connections.

Transport, handling and storage

Transport

In its original packing, a protection relay can be shipped to any destination by all usual means of transport.

If installed in a cubicle, the protection relay can be transported by all usual means of transport in the customary conditions used for cubicles. Storage conditions should be taken into consideration for a long period of transport.

Handling

Protective relays, although generally of robust construction, require careful handling: handle the PowerLogic P5 protection relays in their original packing in order to help protect it against damage.

If installed in a cubicle: should the protection relay fall out of a cubicle, check its condition by visual inspection and energising.

Storage

NOTICE

WATER DAMAGE

- Do not expose the products to sustained humidity during storage.
- Electrically energise the products within three months of unpacking.
- Where electrical equipment is being installed, allow sufficient time for acclimatisation to the ambient temperature of the environment before powering on.
- Supply power to the protection relay every two years for at least one hour.

Failure to follow these instructions can reduce the product life span.

If PowerLogic P5 protection relays are not to be installed immediately upon receipt, they should be stored in a place free from dust, humidity and moisture in their original packaging. PowerLogic P5 can be stored in its original packaging, in an appropriate location for several years:

- Temperature between -25℃ and +70℃ (between -13℉ and +158℉)
- Humidity < 90%

Care should be taken on subsequent unpacking so that any dust collected on the carton does not fall inside. In locations of high humidity, the carton and packing may become impregnated with moisture and the de-humidifier crystals will lose their efficiency.

Periodic, yearly checking of the environment and the packaging condition is recommended: the relay should be powered on for one hour every two years.

Once the protection relay has been unpacked, it should be energised as soon as possible in an appropriate environment in term of temperature, humidity and pollution.

If protection relay is installed in a cubicle, keep the cubicle protection packing as long as possible. The protection relay, like all electronic units, should not be stored in a damp environment for more than a month. The protection relay should be energised as quickly as possible. If this is not possible, the cubicle reheating system should be activated.

Unpacking

Equipment receipt

NOTICE

PRODUCT TAMPERING

Our products leave our factory in closed, sealed original packaging. At delivery, if the packaging is opened or the seal is broken, Schneider Electric must be informed.

Failure to follow these instructions can result in compromised confidentiality and authenticity of the information contained in the products.

A PowerLogic P5 protection relay is shipped in a cardboard box which helps protect it against any shocks received in transport.

Protection relays that are supplied unmounted and not intended for immediate installation should be returned to their protective plastic bags and delivery carton.

Package contents

Each PowerLogic P5 protection relay is delivered in an independent package containing:

- A PowerLogic P5 protection relay
  - **1a**: PowerLogic P5x20
  - **1b**: PowerLogic P5x30
- A certificate of conformity ②
- An installation sheet providing main information about installation and use ③
- One plastic bag including a set of labels and stickers, and the cabling kit for connector A
  - **4a-1**: pack for PowerLogic P5x20 of CT/VT analogue input type
  - **4a-2**: pack for PowerLogic P5U20 of LPCT/LPVT analogue input type
  - **4b-1**: pack for PowerLogic P5x30 of CT/VT analogue input type
  - **4b-2**: pack for PowerLogic P5x30 of LPCT/LPVT analogue input type
- One plastic bag including one to four rear connectors
  - **5a**: pack for PowerLogic P5x20
  - **5b**: pack for PowerLogic P5x30

Figure 1 - PowerLogic P5 package contents

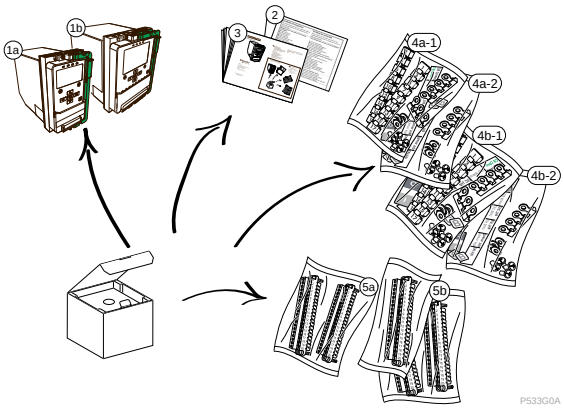

Accessories, such as the mounting accessory with panel mounting kit, communication modules and cables can be delivered in a separate package.

Equipment identification

Different kinds of labels and stickers are used on the PowerLogic P5 protection relay to identify its model type and its different components.

Figure 2 - Label examples on the PowerLogic P5 protection relay

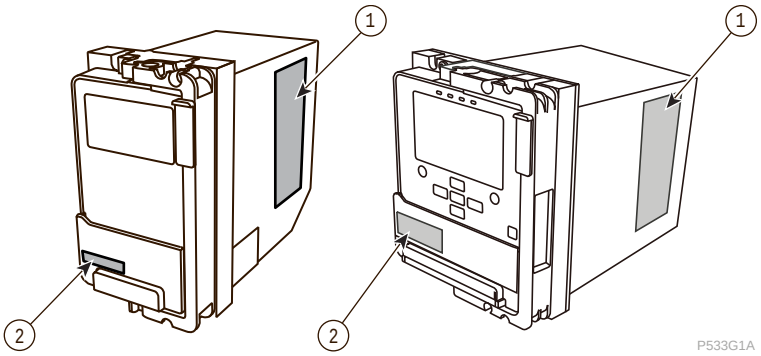

① Rear panel connection instructions label

② Reference label

Reference label

The reference label contains the commercial reference, the serial number, the power supply voltage of the relay and a QR code. The QR code can be used to access the specific product website through **mySchneider** App (available in App Store and Google Store) to get basic product documents and product life cycle documents like Certificate of Conformity and Test.

Figure 3 - Reference label on PowerLogic P5x20

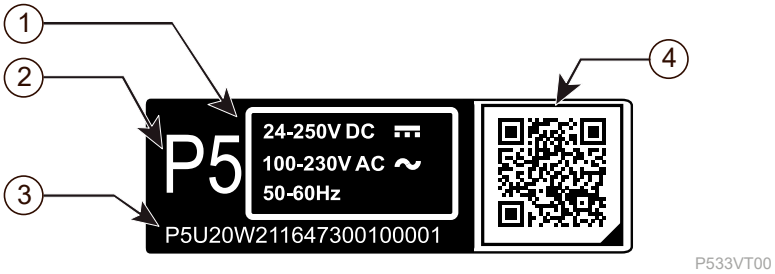

Figure 4 - Reference label on PowerLogic P5x30

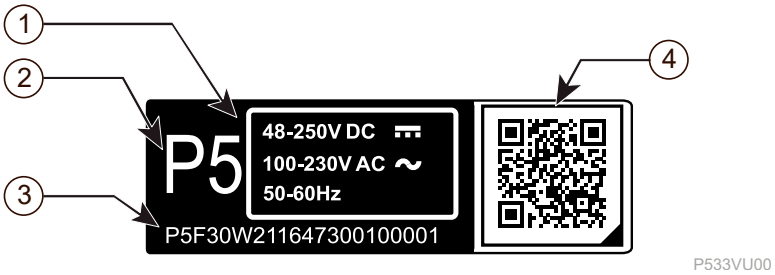

① Power supply voltage (Optional 24–48 V DC for PowerLogic P5x30)

② Reference

③ Serial number

④ Access to product website

Rear panel connection instructions label

The rear panel connection label contains the designation of the rear panel terminals together with instructions for installing and wiring the protection relay.

Figure 5 - Example rear panel connection instructions label

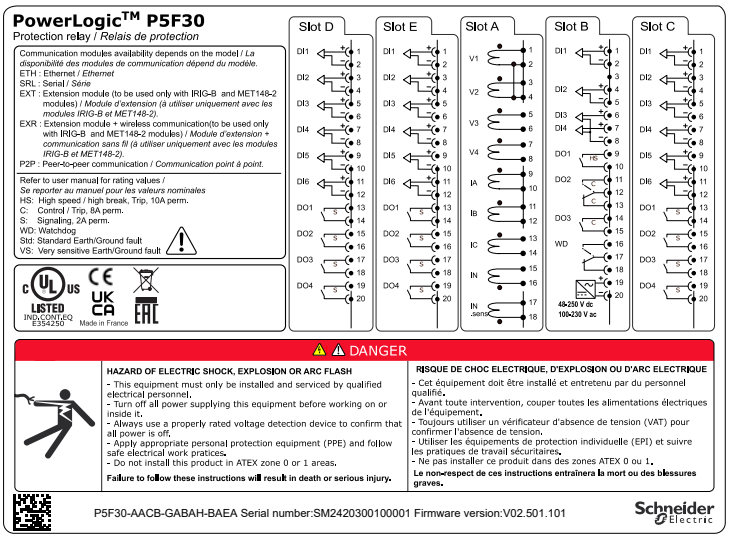

As built configuration

The information about model number, serial number and firmware number can be found on the bottom side of rear panel connection instructions label, as shown above. It informs on how the product was built and left the factory. If there are further manipulations on the product (for example, firmware upgrade), it is recommended to update the information on the label.

Model number label

Two model number labels containing the first digits of the device model number are available on both the withdrawable internal part ① and the static case ②. They are placed on the device for the purpose of correctly coupling the two parts during maintenance. If the withdrawable internal part of the protection relay is removed from the case, check that their model numbers are identical before assembling.

Figure 6 - Model number labels (PowerLogic P5x30 shown as an example)

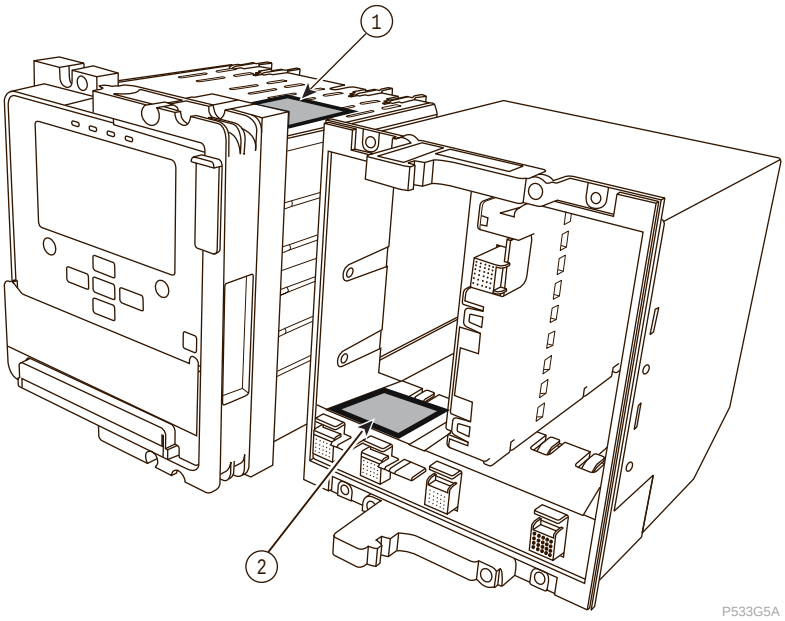

① Model number label on the withdrawable internal part

② Model number on the static case

Rear panel identification stickers

Two kinds of identification stickers are available for the analogue input connector, the digital I/O connectors and the communication ports on the rear panel:

- Stickers on analogue input and digital I/O connectors ①:

  Each analogue or digital connector on the rear panel is identified using a sticker. Stickers for additional, optional connectors are found in the product package.

- Communication port stickers ②:

  The rear ports of the communication modules are marked as follows:

ETH	Dual port copper (RJ45) or fibreoptic (multi-mode glass fibre) Ethernet ports
SRL	RS485 or fibre optic serial communication ports
EXT	Extension port for external modules (IRIG-B time synchronisation and/or RTD inputs module) with backup memory
EXR	Extension port for external modules (IRIG-B time synchronisation and/or RTD inputs module) with backup memory and Zigbee receiver.
P2P	Peer to peer port with InterRelay module(FO)

Figure 7 - Rear panel identification stickers

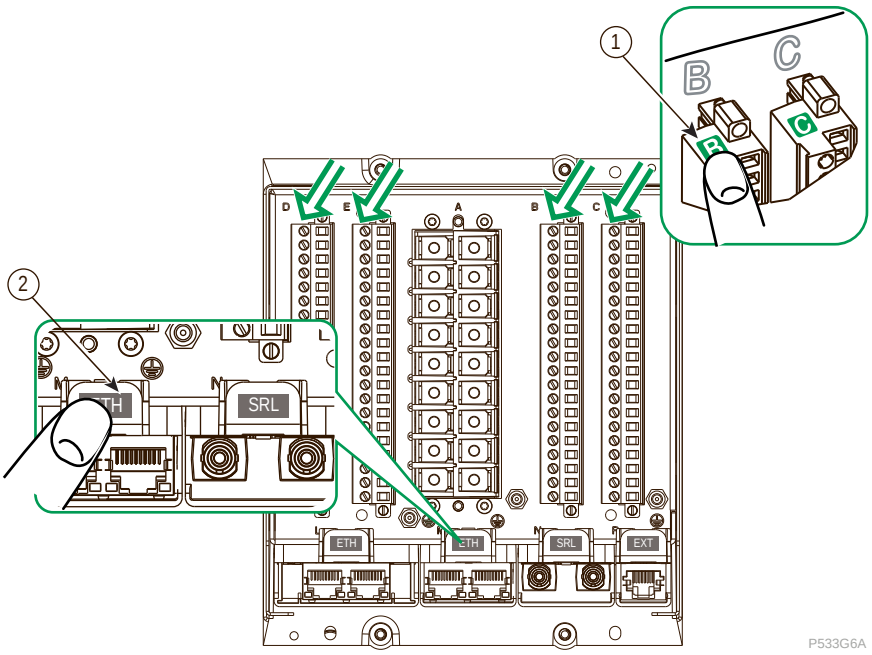

Dimensions

Product dimensions

Dimensions of the PowerLogic P5 protection relays are shown below:

Figure 8 - PowerLogic P5x20 dimensions

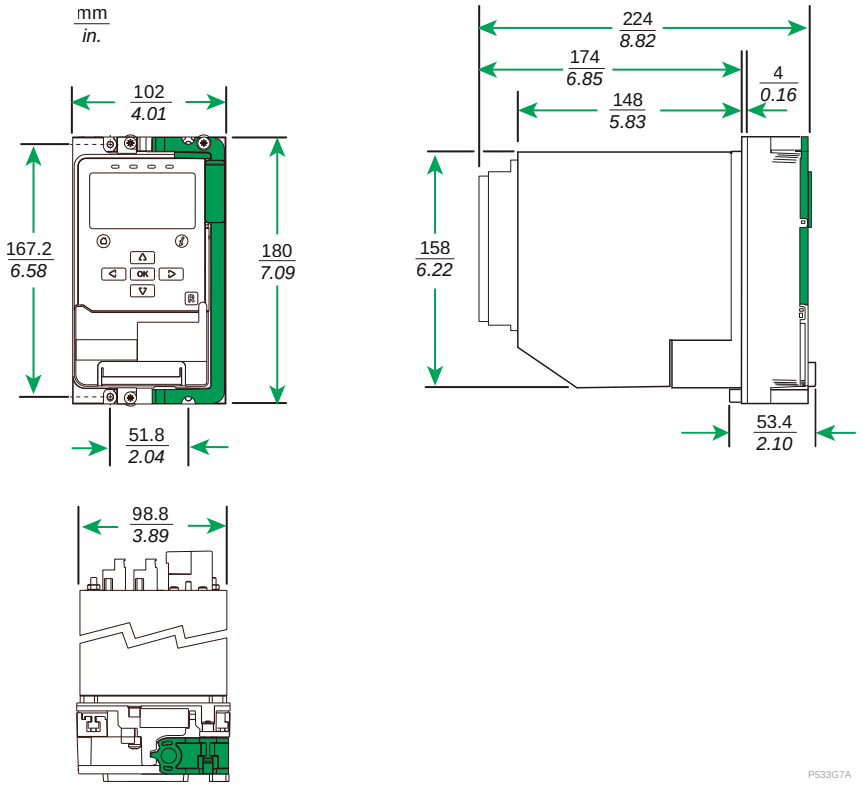

Figure 9 - PowerLogic P5x30 dimensions

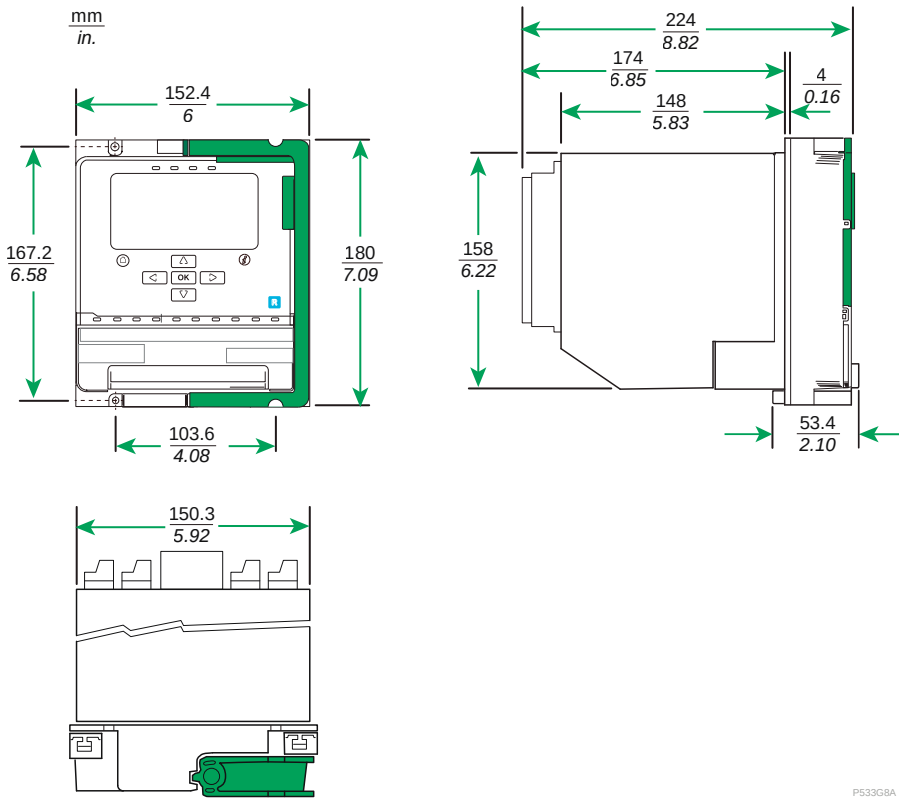

Figure 10 - PowerLogic P5 flush mounting dimension

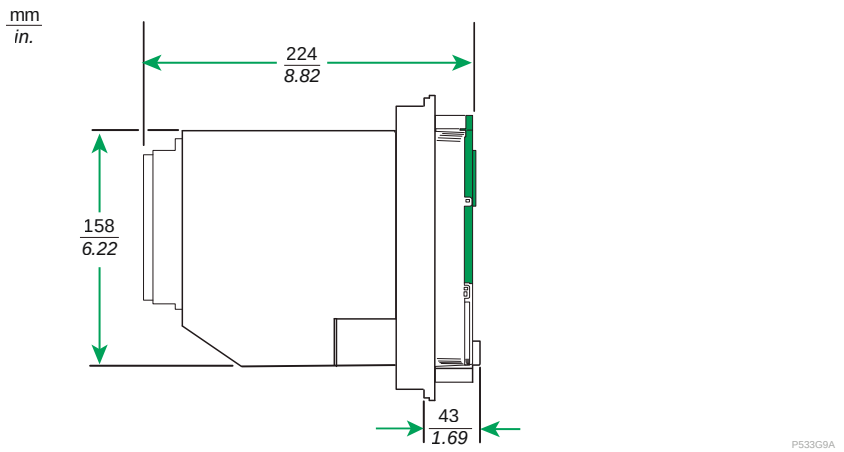

Rear clearances

For easy access to the rear panel, the rear clearances illustrated below are recommended:

Figure 11 - Rear clearances illustrated

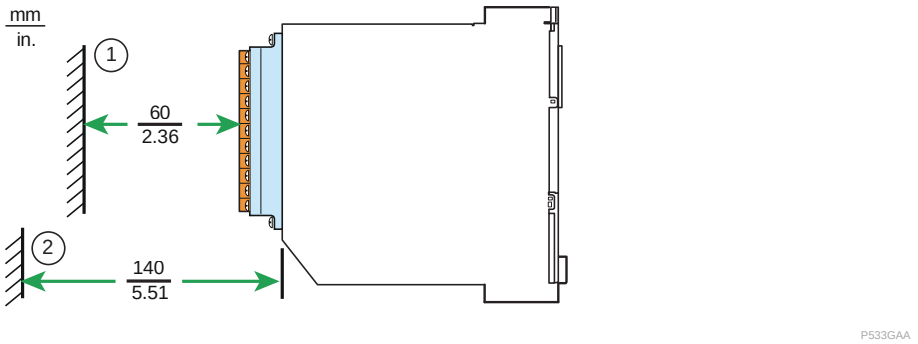

① This clearance must be available permanently for PowerLogic P5 protection relay wiring and assembly.

② This clearance should be transiently available during maintenance operations when communication modules are replaced.

Operating environment

Operating temperature and humidity

NOTICE

POTENTIAL DAMAGE FROM ENVIRONMENTAL CONDITIONS

- The PowerLogic P5 protection relay must be installed in an environment within the specified operation temperature and humidity.
- Avoid condensation on the PCB boards inside the protection relay.

Failure to follow these instructions can result in equipment damage.

The PowerLogic P5 protection relay is intended for indoor installation and use only. If it is required for use in an outdoor environment, it must be mounted in a specific cabinet that will enable it to meet the requirements of IEC 60529 with the classification of protection degree IP54 (dust and splashing water protected).

The temperature/relative humidity factors must be compatible with the environmental withstand characteristics of the PowerLogic P5 protection relay:

- Recommended operating range of temperature: -10°C to +55°C (+14°F to +131°F).
- Maximum operating temperature: -40°C to +70°C (-40°F to +158°F).
- Average humidity: <75% RH over the year.
- Temporary permissible humidity: <93% RH (less than 80 hours per year)
- No condensation.

If the operating conditions are outside the normal range, special arrangements should be made before commissioning, such as air conditioning of the premises.

Operation in a polluted atmosphere

A contaminated industrial atmosphere (such as the presence of chlorine, hydrofluoric acid, sulphur, solvents, etc.) can cause corrosion of the electronic components and terminals, in which case environmental control arrangements should be made (such as pressurised premises with filtered air, etc.) before commissioning.

To improve robustness of PowerLogic P5 protection relays against such environment, all the electronic boards of PowerLogic P5 protection relays have a conformal coating, type AVR80 BA.

Mounting

General mounting operations

Mounting the protection relay in panels or on rack frame

The PowerLogic P5 protection relays are available for flush mounting or rack mounting.

The PowerLogic P5 protection relay is fixed by four M4 x 20 mm (0.787 in.) stainless steel self-tapping screws with stainless steel washers (with diameter 4 x 8 mm (0.157 x 0.315 in.) maximum) at lower and upper parts.

Figure 12 - Mounting the PowerLogic P5x20 protection relay

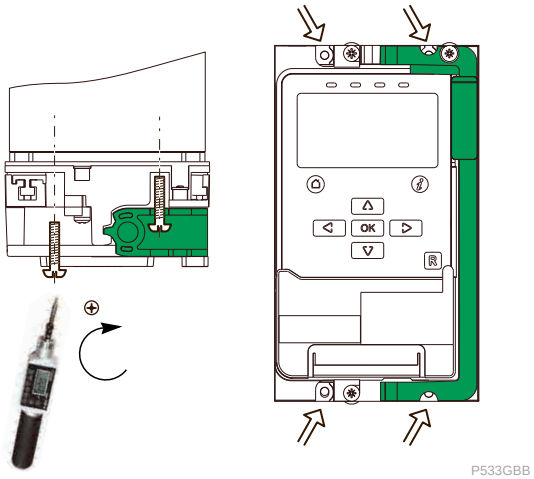

Figure 13 - Mounting the PowerLogic P5x30 protection relay

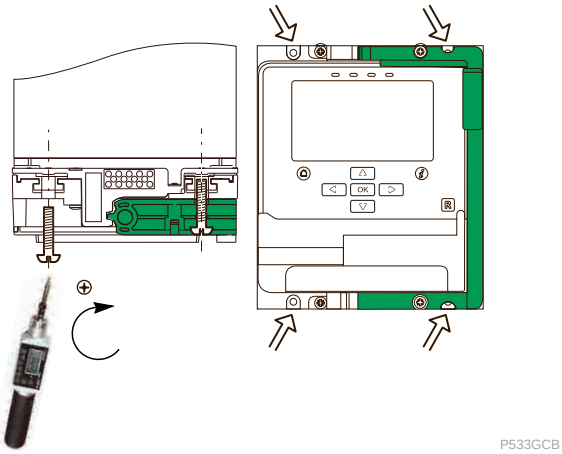

Screw	M4 x 20 mm (0.787 in.) stainless steel self-tapping screws with stainless steel washers (with diameter 4 x 8 mm (0.157 x 0.315 in.) maximum) x 4
Tightening torque	1N·m (8.85 lb-in)
Tool	Digital torque screwdriver

Unlocking the withdrawable part from its outer case

In order to maintain the withdrawable part (internal part) with the fixed part (outer part) of the relay during transportation, locking screws are used on the front face to fix the two relay parts together.

The front face locking screws can be unscrewed as shown in the figure below.

Figure 14 - Unscrewing the front face locking screws

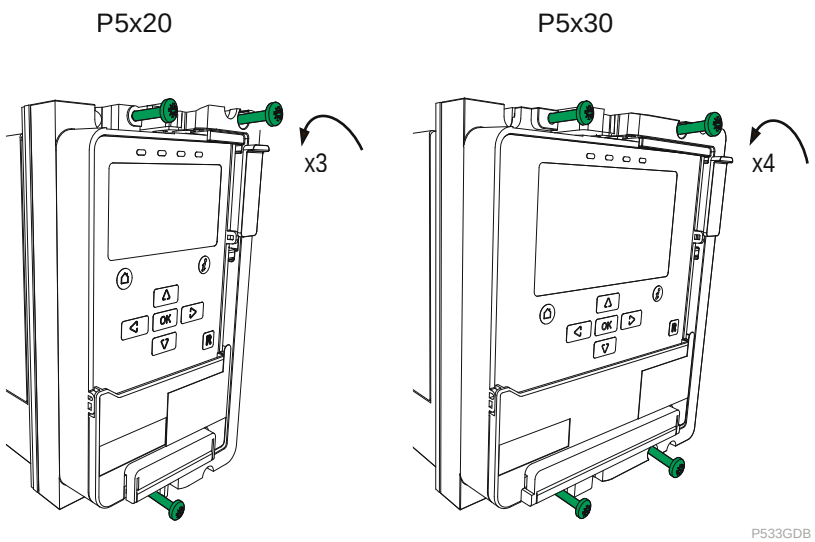

Screw	3 screws mounted on PowerLogic P5x20; 4 screws mounted on PowerLogic P5x30
Tightening torque for installing back the screws	1N·m (8.85 lb-in)
Tool	Digital torque screwdriver

Lock the shutter and handle

In order to help prevent unauthorised access to the command keys and USB ports on the local panel of the PowerLogic P5 protection relay, the shutter for covering the lower section of the protection relay needs to be locked with a wired lead seal.

Figure 15 - Lock the shutter

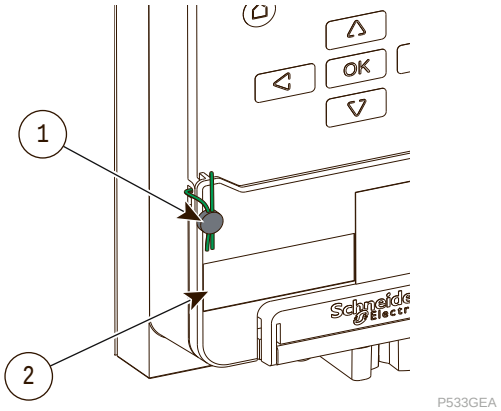

① Wired lead seal

② Protective panel

The handle on the front face of the protection relay is used to separate the withdrawable part from the fixed outer case. In order to help prevent unauthorised dismantling fix the lock tab on the handle with a wired lead seal to restrict the rotation of the handle.

Figure 16 - Lock the handle

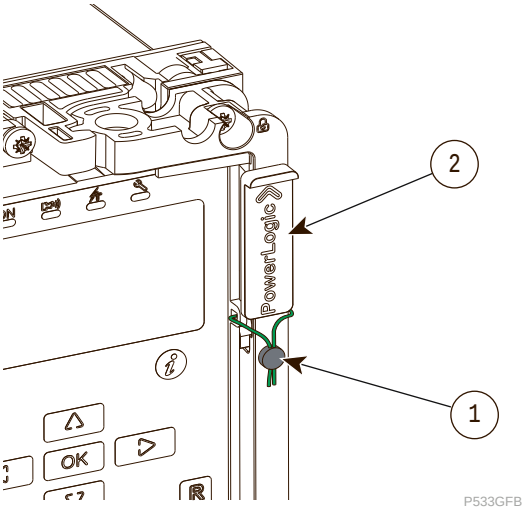

① Wired lead seal

② Lock tab on the handle

Flush mounting with accessory

⚠ CAUTION

CUTS AND PHYSICAL IMPACT

- Wear gloves and safety shoes.
- Trim the edges of the cut-out plates to remove any jagged edges.
- Carry the assembled relay with withdrawable part locked.
- When cases are mounted on a rack (with withdrawable part not inserted), stay far enough from the protruding parts of the cases.

Failure to follow these instructions can result in injury or equipment damage.

The PowerLogic P5 protection relay can be mounted onto panels with the provided accessory. It is recommended to use the flush mounting with accessory for PowerLogic P5 protection relay.

Mounting Procedure

1. Prepare cut-out on the panel according to the following dimensions.

Figure 17 - Panel cut-out for PowerLogic P5x20/PowerLogic P5x30

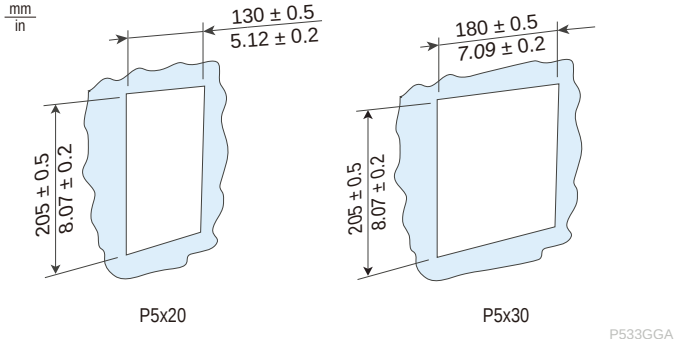

2. Insert the flush mounting accessory ① in the panel ② and check that the rear mounting supports ③ are accessible for panel mounting kits to be inserted.

Figure 18 - Flush mounting accessories

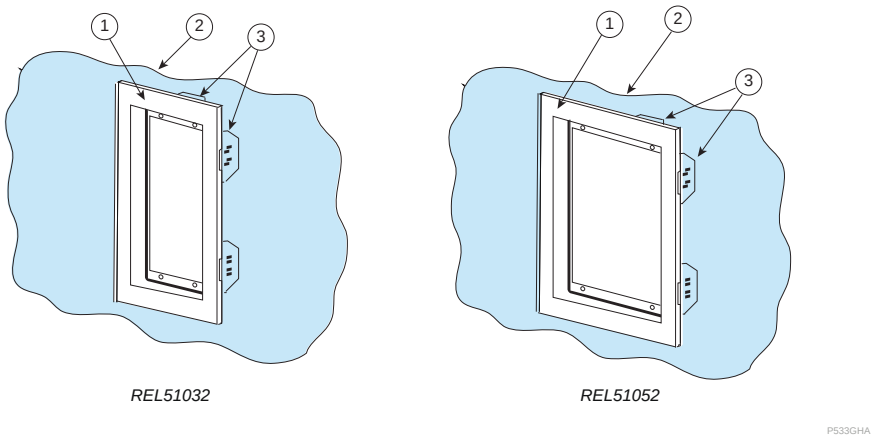

Accessory Ref. No.	REL51032 (for use with PowerLogic P5x20)
Accessory Ref. No.	REL51052 (for use with PowerLogic P5x30)

3. Insert the panel mounting kits in the mounting support holes ① and then push down the front parts (flush panel side) ② to lock the flush mounting accessory on the panel.

Figure 19 - Insert the mounting kits

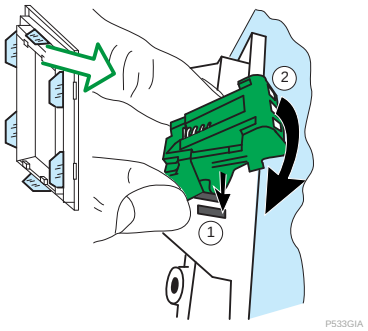

4. Remove the top and bottom seal straps from the rear mounting surface of the protection relay.

Figure 20 - Remove the seal straps from the relay

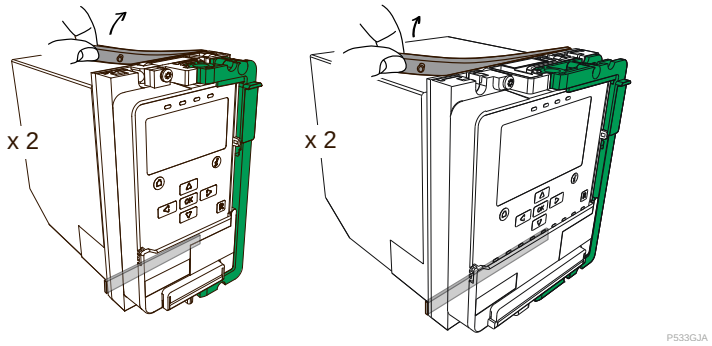

5. Insert the protection relay ② into the mounting accessory ① and hold it in the mounting position.

Figure 21 - Insert the protection relay

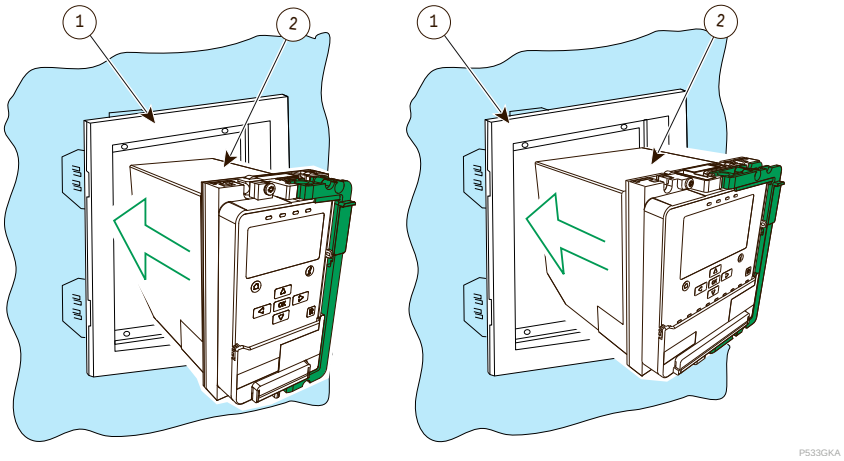

6. Fix the protection relay on the accessory with the screws provided in the flush mounting accessory.

Figure 22 - Fix the protection relay (PowerLogic P5x30 shown as an example)

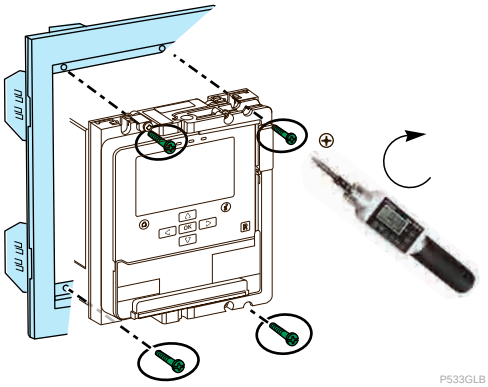

Screw	4 screws provided with the flush mounting accessory
Tightening torque	1 N·m (8.85 lb-in)
Tool	Digital torque screwdriver

Flush mounting without accessory

⚠CAUTION

CUTS AND PHYSICAL IMPACT

- Wear gloves and safety shoes.
- Trim the edges of the cut-out plates to remove any jagged edges.
- Carry the assembled relay with withdrawable part locked.
- When cases are mounted on a rack (with withdrawable part not inserted), stay far enough from the protruding parts of the cases.

Failure to follow these instructions can result in injury or equipment damage.

The PowerLogic P5 protection relay can be mounted directly onto panels without any accessory.

Mounting Procedure

1. Prepare the cut-out in the panel for flush mounting according to the following dimensions.
   The thickness of the panel plate should be a minimum of 3 mm (0.12 in.).

Figure 23 - Panel cut out for PowerLogic P5x20/PowerLogic P5x30

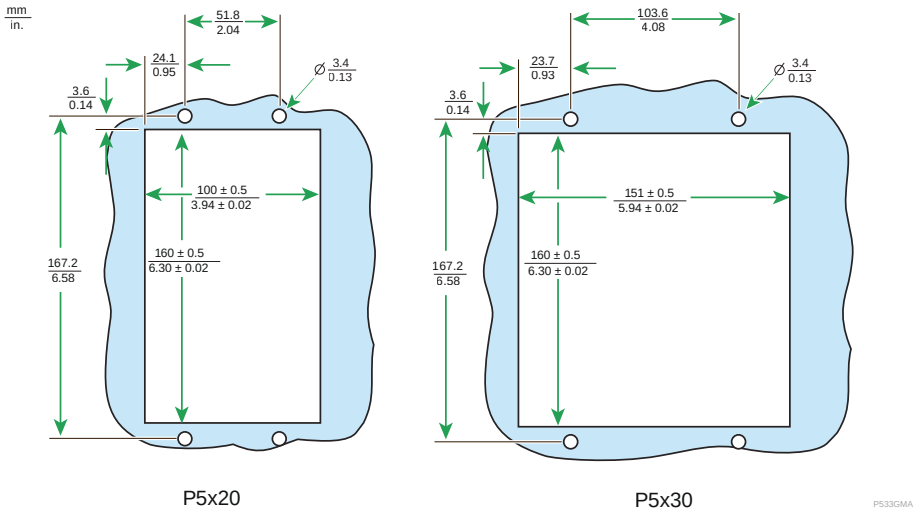

2. Fasten the PowerLogic P5 protection relay in its position with four M4 x 20 mm (0.787 in.) stainless steel self-tapping screws with stainless steel washers (diameter 4 x 8 mm (0.157 x 0.315 in.) maximum) at lower and upper parts.

Figure 24 - Fastening the PowerLogic P5 onto panel (PowerLogic P5x30 shown as an example)

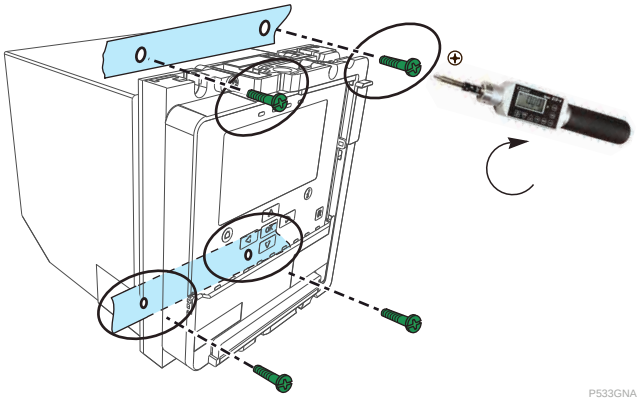

Screw	M4 x 20 mm (0.787 in.) stainless steel self-tapping screws with stainless steel washers (with diameter 4 x 8 mm (0.157 x 0.315 in.) maximum) x 4
Tightening torque	1 N·m (8.85 lb-in)
Tool	Digital torque screwdriver

Rack mounting

⚠CAUTION

FALLING DEVICES

- Wear gloves and safety shoes.
- Carry the assembled relay with withdrawable part locked.
- When cases are mounted on a rack (with withdrawable part not inserted), stay far enough from the protruding parts of the cases.

Failure to follow these instructions can result in injury or equipment damage.

PowerLogic P5 protection relays may be rack mounted using single rack mounting frames (ref: REL51021), as illustrated in the figure below.

Figure 25 - Rack mounted protection relays

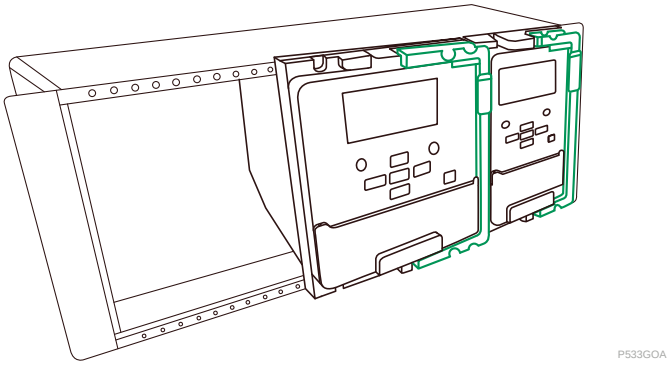

The two horizontal rails of the rack frame are drilled of holes at approximately 26 mm (10 in.) intervals. The PowerLogic P5 protection relays are fixed by their mounting flanges using M4 x 20 mm (0.787 in.) stainless steel self-tapping screws with stainless steel washers (diameter 4 x 8 mm (0.157 x 0.315 in.) maximum).

Relays can be mechanically grouped into single tier or multi-tier arrangements by means of the rack frame. This enables schemes using products from the PowerLogic P5 product ranges to be pre-wired together prior to mounting (rack mounting with M4 self-tapping screws, washers and nut).

Mounting Procedure

1. Insert the PowerLogic P5 protection relay ② into the rack frame ①.

Figure 26 - Insert the protection relay into the rack frame

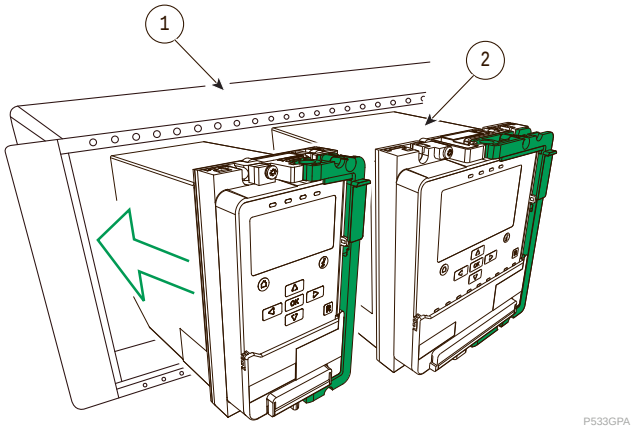

Rack frame Ref. No.	REL51021

2. Fasten the protection relay onto the rack frame with four M4 x 20 mm (0.787 in.) stainless steel self-tapping screws and stainless steel washers (diameter 4 x 8 mm (0.157 x 0.315 in.) maximum).

Figure 27 - Fasten the protection relay onto the rack frame (PowerLogic P5x20 shown as an example)

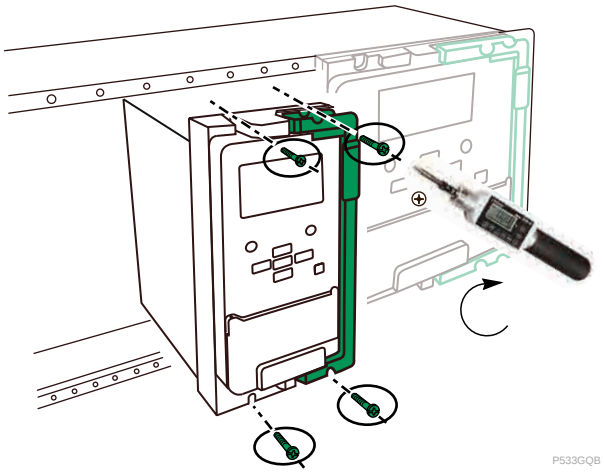

Screw	M4 x 20 mm (0.787 in.) stainless steel self-tapping screws with stainless steel washers (with diameter 4 x 8 mm (0.157 x 0.315 in.) maximum) x 4
Tightening torque	1 N·m (8.85 lb-in)
Tool	Digital torque screwdriver

3. Cover up the open section of the rack frame with blank plates if there is still space left for future installation of protection relays or ancillary components.

Figure 28 - Install the blank plate

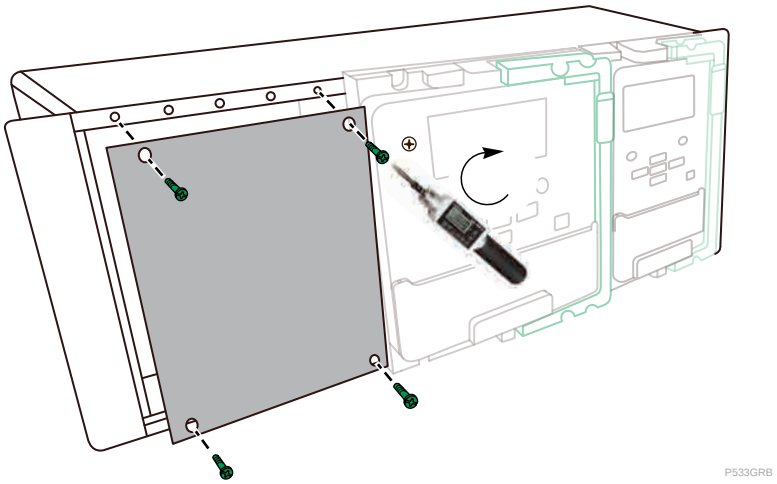

Blank plate Ref. No.	REL51018: 30TE 206.8 mm x 177 mm (6 in. x 6.97 in.) REL51019: 20TE 103.2 mm x 177 mm (4 in. x 6.97 in.); REL51020: 10TE 50.2 mm x 177 mm (2 in. x 6.97 in.);
Screws	M4 x 20 mm (0.787 in.) stainless steel self-tapping screws with stainless steel washers (with diameter 4 x 8 mm (0.157 x 0.315 in.) maximum) x 4
Tightening torque	1.0 N·m (8.85 lb-in)
Tool	Digital torque screwdriver
Subsequent operation	Mount the rack frame on the rack using the mounting flanges on both sides of the frame.

Rear panel connectors and application diagrams

PowerLogic P5 rear panel

Rear panel layout

The PowerLogic P5 protection and control relay rear panels contain the following modules installed in slots and identified by letters:

Figure 29 - PowerLogic P5 protection and control relay rear panels

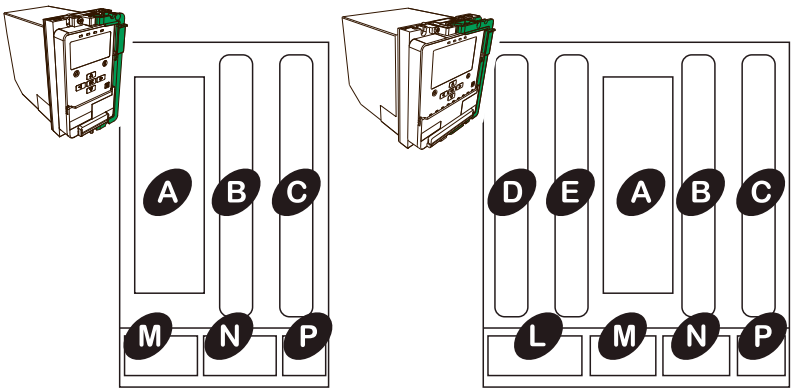

P533GSA

PowerLogic P5x20	PowerLogic P5x30	Slot: Module
✓	✓	A: Analogue input module
✓	✓	B: Power supply
✓	✓	C: Empty or additional digital input/output module
	✓	D: Empty or additional digital input/output module
	✓	E: Empty or additional digital input/output module
	✓	L: Empty or ETH, Ethernet module (TP)
	✓	L: Empty or P2P, InterRelay module(FO) **NOTE:** This board is fitted by default with P5L30 (not an option).
✓	✓	M: Empty or ETH, Ethernet module (TP or FO)
✓	✓	N: Empty or SRL, Serial communication module (RS485 or FO)
✓	✓	M and N: Empty or Combined Ethernet HSR/PRP 2TP + RS485 module or Combined Ethernet HSR/PRP FO + RS485 module
✓	✓	P: Empty or EXT, Extension module or P: EXR, Extension Zigbee module

NOTE: For the slot occupation rules of PowerLogic P5x30 slot C, D and E, refer to Slot occupation rules, page 653.

PowerLogic P5U20 rear panel (CT version)

Figure 30 - PowerLogic P5U20 rear panel (CT version)

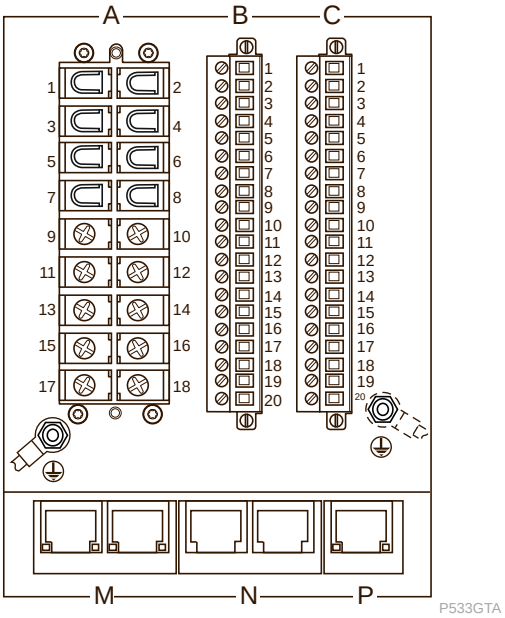

Figure 31 - PowerLogic P5U20 (CT version) rear terminal designations

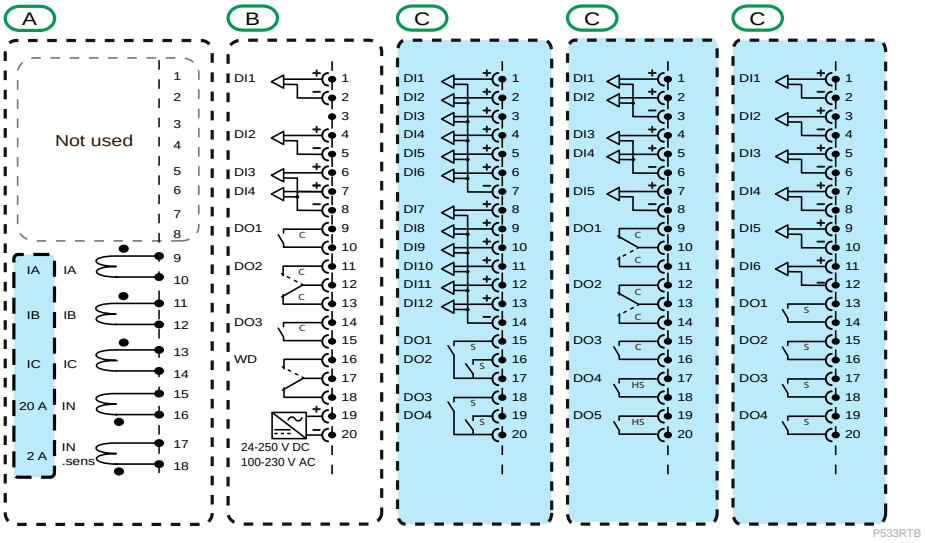

	Optional		
IX	Phase current	IN	Standard earth/ground fault
DIx	Digital input	IN.sens	Sensitive earth/ground fault
DOx	Digital output	WD	Watchdog contact
- HS	High speed / high break, Trip, 10 A perm.		
- C	Control / Trip, 8 A perm.		
- S	Signalling, 2 A perm.		

PowerLogic P5U20 rear panel (LPCT/LPVT version)

Figure 32 - PowerLogic P5U20 rear panel (LPCT/LPVT version)

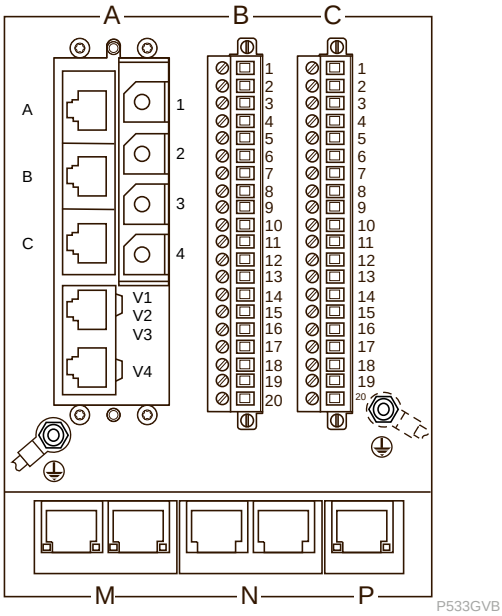

Figure 33 - PowerLogic P5U20 (LPCT/LPVT version) rear terminal designations

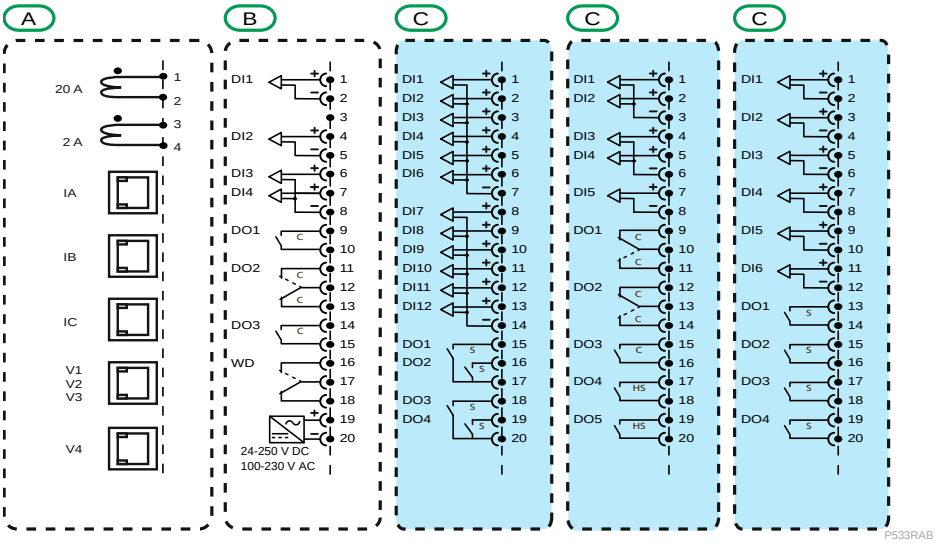

	Optional		
IX	Phase current	VX	phase to neutral voltage
DIx	Digital input	WD	Watchdog contact
DOx	Digital output		
- HS	High Speed / high break, Trip, 10 A perm.		
- C	Control / Trip, 8 A perm.		
- S	Signalling, 2 A perm.		

PowerLogic P5V20 rear panel

Figure 34 - PowerLogic P5V20 rear panel

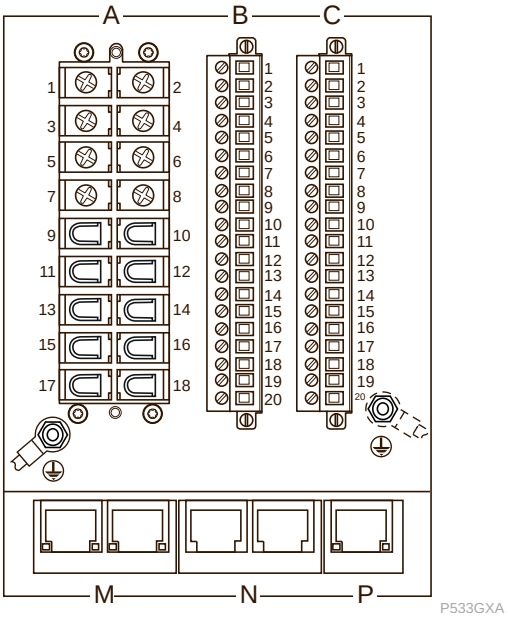

Figure 35 - PowerLogic P5V20 rear terminal designations

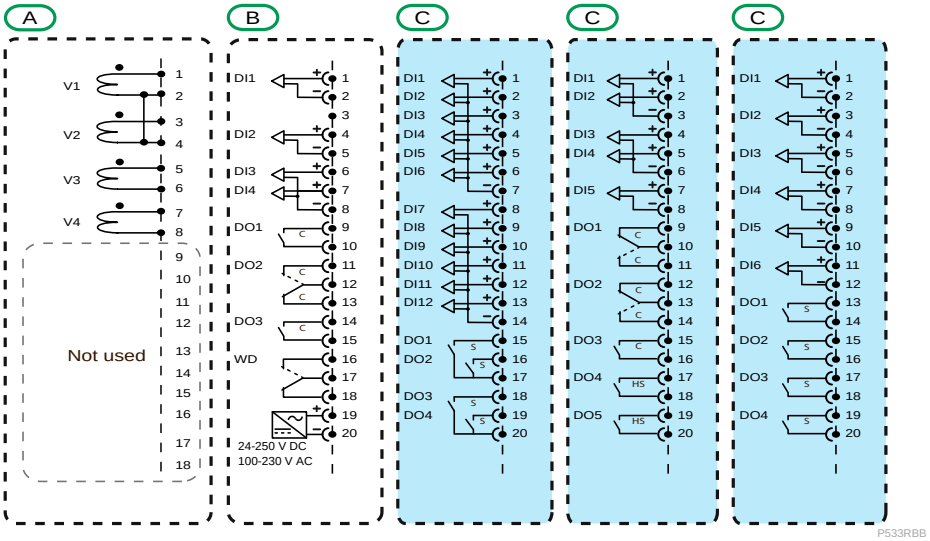

	Optional		
VX	Phase to neutral voltage	WD	Watchdog contact
DOx	Digital output	DIx	Digital input
- HS	High Speed / high break,Trip, 10 A perm.		
- C	Control / Trip, 8 A perm.		
- S	Signalling, 2 A perm.		

PowerLogic P5F30/P5M30/P5L30 rear panel (CT/VT version)

Figure 36 - PowerLogic P5F30/P5M30/P5L30 rear panel (CT/VT version)

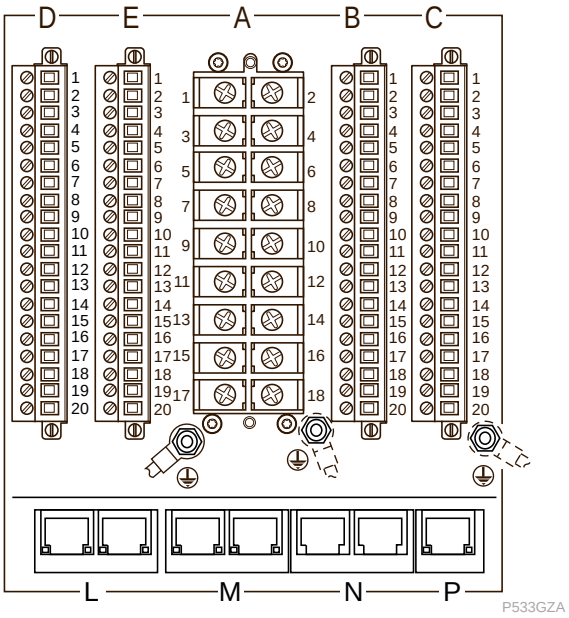

Figure 37 - PowerLogic P5F30/P5M30/P5L30 (CT/VT version) rear terminal designations

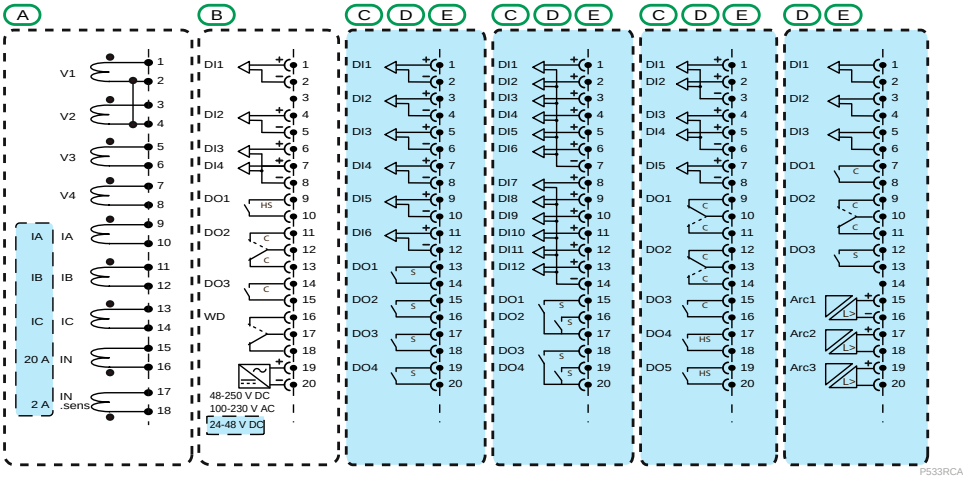

	Optional		
IX	Phase current	IN.sens	Sensitive earth/ground fault
VX	Phase to neutral voltage	IN	Standard earth/ground fault
DIx	Digital input	Arc	Arc sensor
DOx	Digital output	WD	Watchdog contact
- HS	High Speed / high break, Trip, 10 A perm.		
- C	Control / Trip, 8 A perm.		
- S	Signalling, 2 A perm.		

PowerLogic P5F30/P5M30 rear panel (LPCT/LPVT version)

Figure 38 - PowerLogic P5F30/P5M30 rear panel (LPCT/LPVT version)

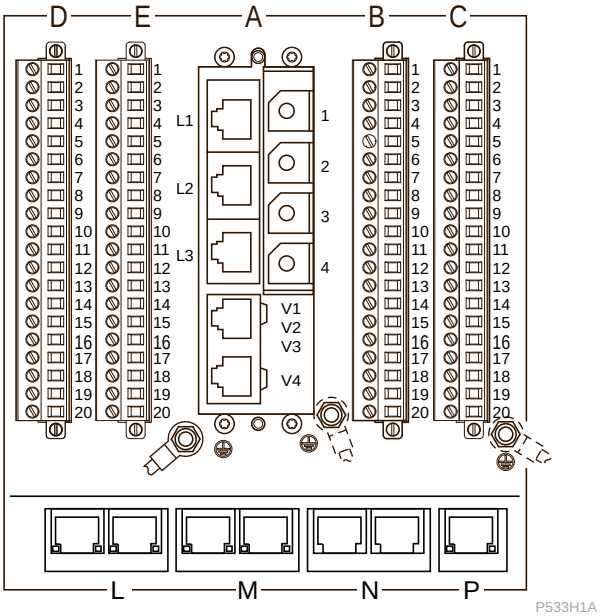

Figure 39 - PowerLogic P5F30/P5M30 (LPCT/LPVT version) rear terminal designations

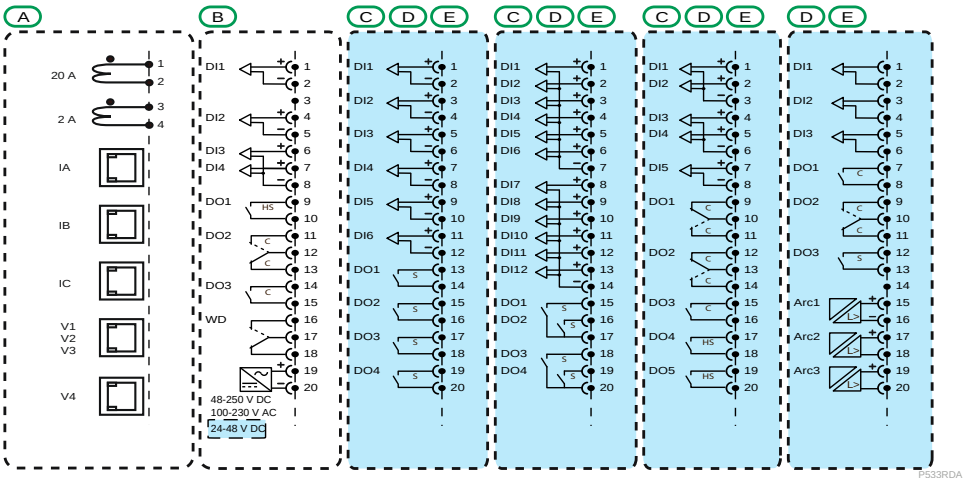

	Optional		
IX	Phase current	VX	Phase to neutral voltage
DIx	Digital input	Arc	Arc sensor
DOx	Digital output	WD	Watchdog contact
- HS	High Speed / high break, Trip, 10 A perm.		
- C	Control / Trip, 8 A perm.		
- S	Signalling, 2 A perm.		

PowerLogic P5T30 rear panel (CT/VT version)

Figure 40 - PowerLogic P5T30 rear panel (CT/VT version)

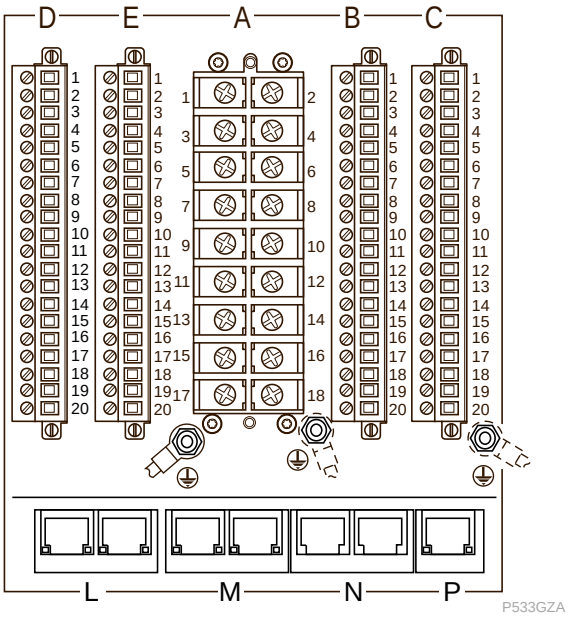

Figure 41 - PowerLogic P5T30 (CT/VT version) rear terminal designations

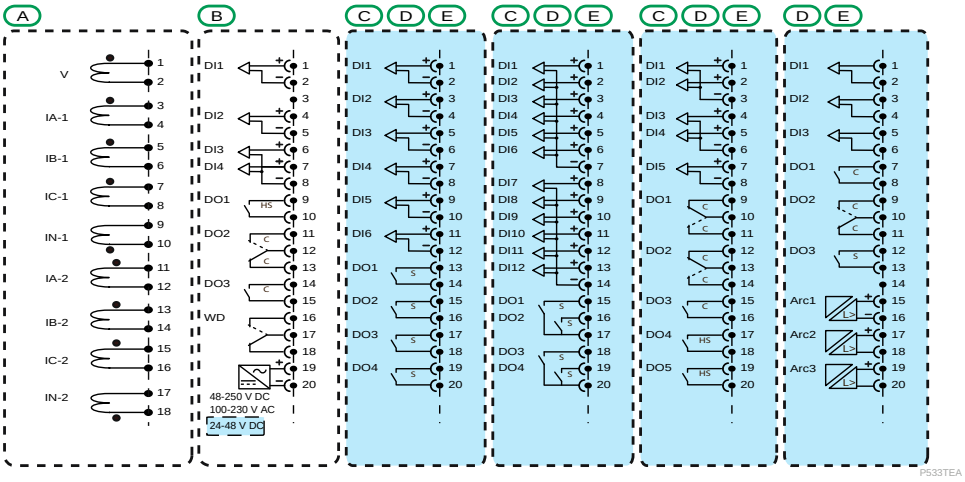

	Optional		
V	Voltage	IN-1/2	Standard earth/ground fault
IX-1/2	Phase current	Arc	Arc sensor
DIx	Digital input	WD	Watchdog contact
DOx	Digital output		
- HS	High Speed / high break, Trip, 10 A perm.		
- C	Control / Trip, 8 A perm.		
- S	Signalling, 2 A perm.		

Default DI/DO configuration of the slot B terminals

The following table lists the default configuration of the digital input and digital output terminals in slot B of the PowerLogic P5 protection and control relay.

Table 6 - Default DI/DO configuration of the slot B terminals

DI1	CB open
DI2	CB close
DI3	Free
DI4	Free
DO1	CB trip
DO2	CB trip lockout
DO3	CB close
WD	Watchdog (not configurable)

Typical application diagrams

The following sections describe typical application diagrams.

CT and LPCT typical application

Figure 42 - 3 x 1/5A CTs and neutral current measured by 1 x 1/2/5A CT and 1 x 1A CT

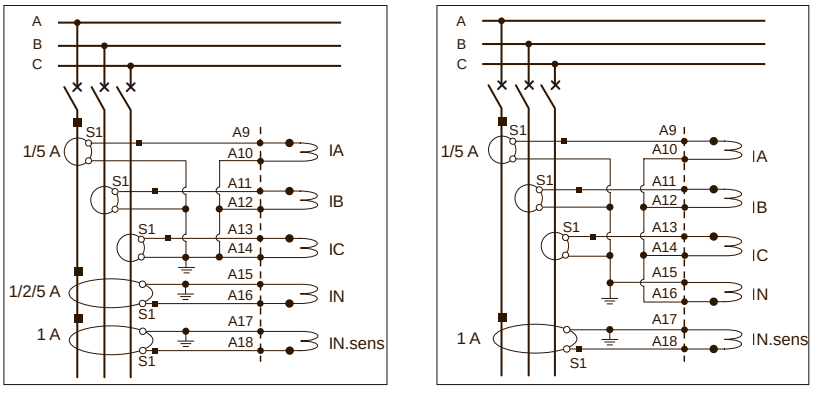

IN: Standard earth/ground fault

IN.sens: Sensitive earth/ground fault

NOTE: For an application with 2 CTs, only IA and IC are used by PowerLogic P5 protection relay (see figure below).

Such so-called 2 CT mode further requires firmware adjustment with setting **Number of connected phase CT** = *A/C* in the **GENERAL** menu/**Scaling** sub-menu. It impacts power measurements as well as protection and monitoring functions using negative sequence currents as detailed in the function descriptions.

Figure 43 - 3 x 1/5A CTs (with IB not connected) and neutral current measured by 1 x 1/2/5A CT and 1 x 1A CT

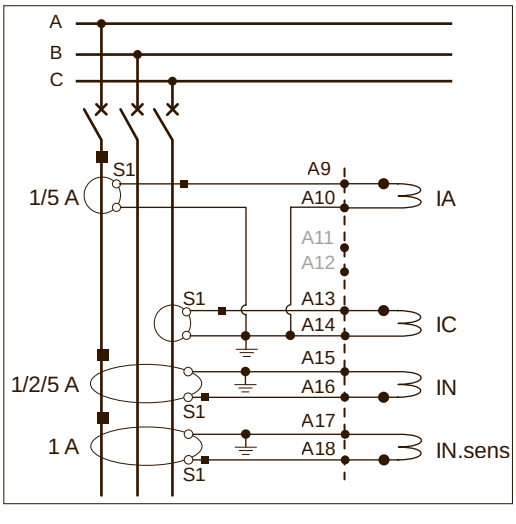

IN: Standard earth/ground fault

IN.sens: Sensitive earth/ground fault

Figure 44 - 3 x 1/5A CTs and 1 neutral current measured by CSH

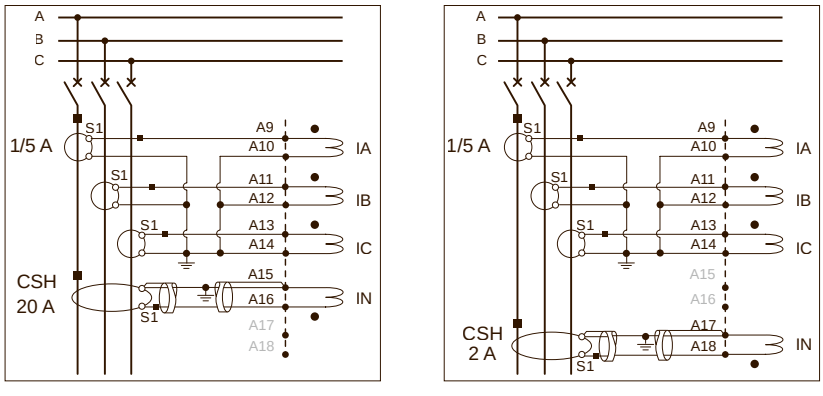

NOTE: For an application with 2 CTs, only IA and IC are used by PowerLogic P5 protection relay (see figure below).

Such so-called 2 CT mode further requires firmware adjustment with setting **Number of connected phase CT** = *A/C* in the **GENERAL** menu/**Scaling** sub-menu. It impacts power measurements as well as protection and monitoring functions using negative sequence currents as detailed in the function descriptions.

Figure 45 - 3 x 1/5A CTs (with IB not connected) and 1 neutral current measured by CSH

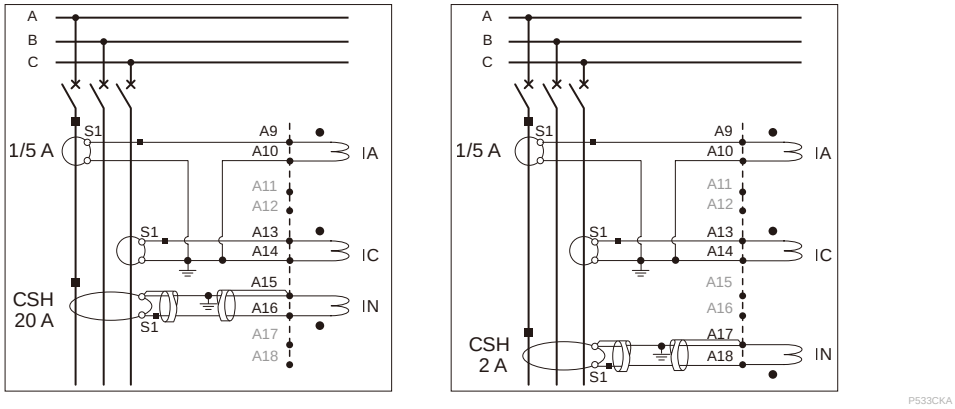

Figure 46 - 3 LPCT and 1 neutral current measured by CSH

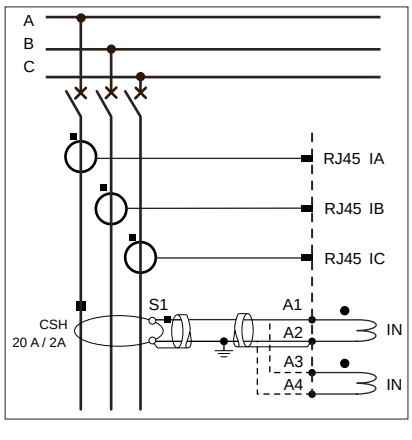

NOTE: All 3 LPCTs must always be connected to the PowerLogic P5 protection relay for proper measurement.

Figure 47 - P5T30 with 6 x 1/5A CTs and neutral currents measured by 2 x 1/2/5A CTs

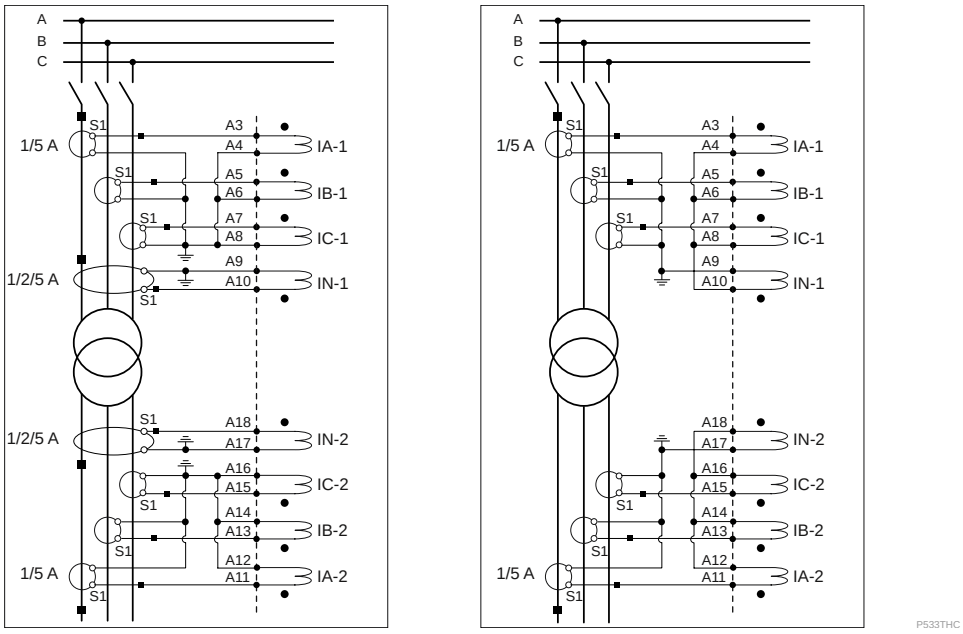

NOTE: Figures show standard connection with phase CTs common points on transformer side.

NOTE: Neutral CTs can also be used to measure the current in a star point earthing/grounding of wye or zigzag connected transformer windings; or in the measuring path of a high-impedance earth/ground fault protection scheme.

VT typical application

Voltage input terminals A2 and A4 have been connected internally. For three phase to neutral applications, short terminals A4 and A6 together.

Figure 48 - 3 phase to neutral voltages (3VP)

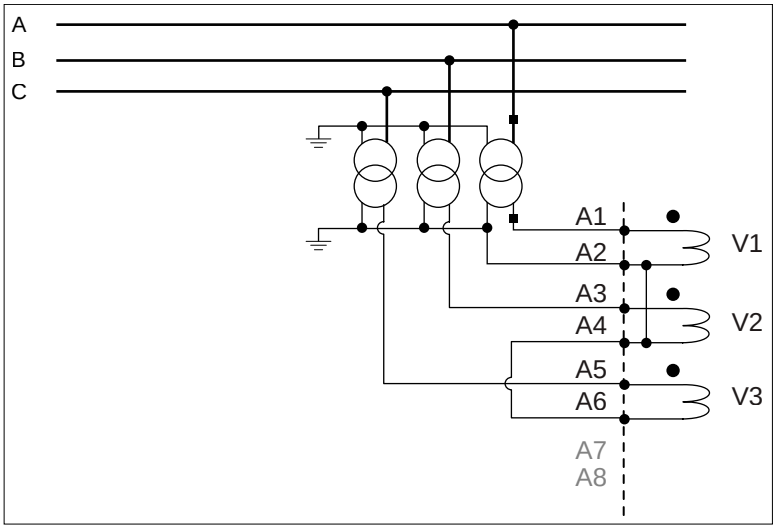

Figure 49 - 3 phase to neutral voltages + 1 neutral voltage (3VP+VN)

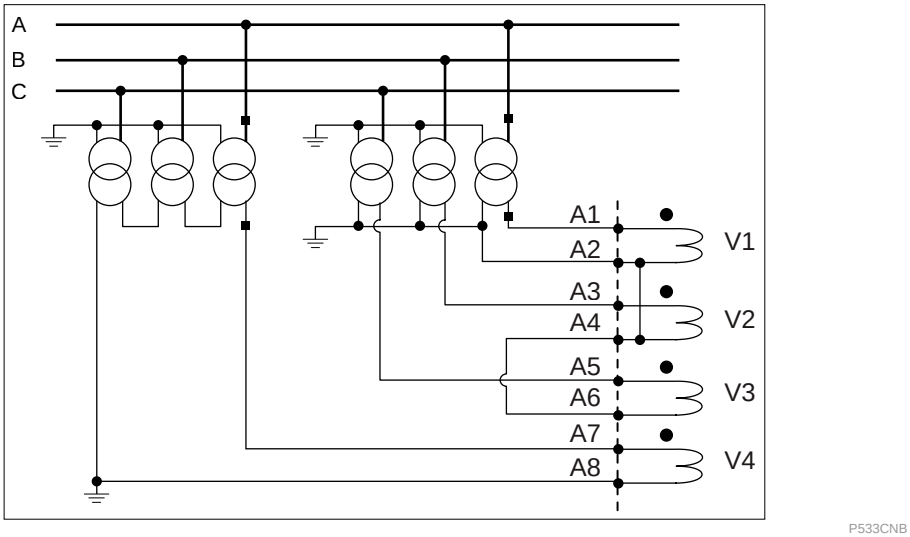

Figure 50 - 3 phase to neutral voltages + 1 phase to neutral voltage (3VP/VPy)

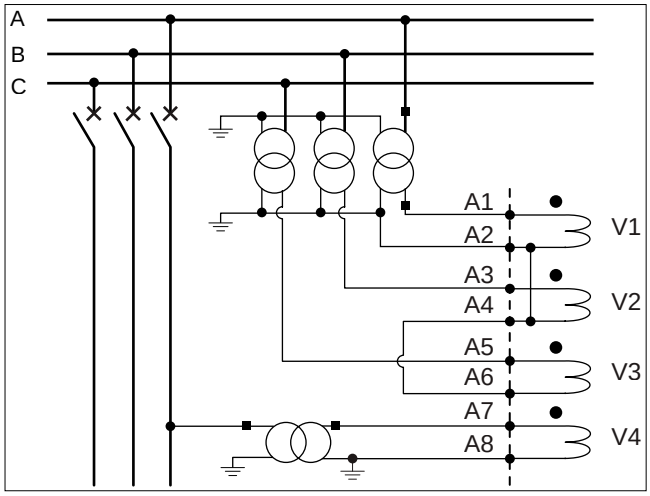

Figure 51 - 3 phase to neutral voltages + 1 phase to phase voltage (3VP/VPPy)

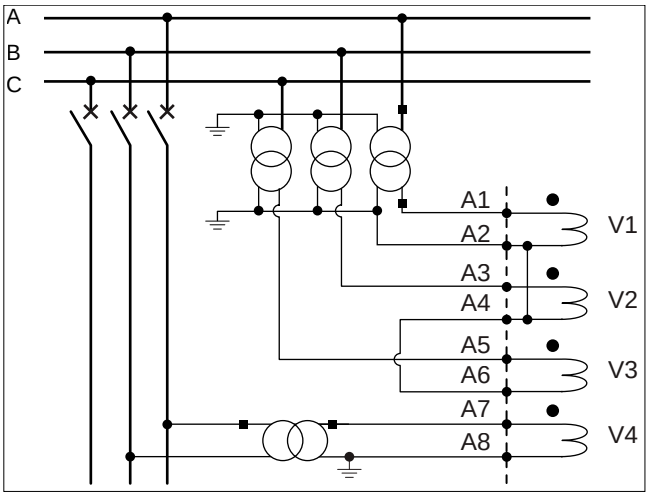

Figure 52 - 2 phase to phase voltages + 1 neutral voltage + phase to phase voltage (2VPP+VN+VPPy)

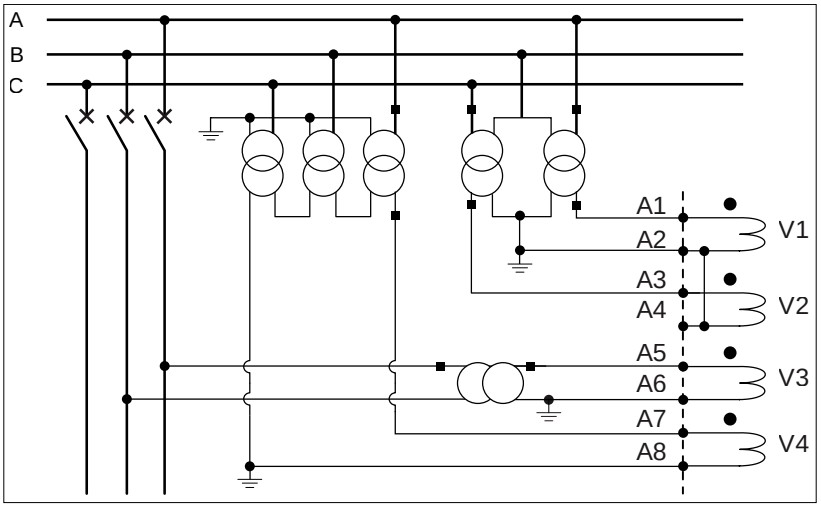

Figure 53 - 2 phase to phase voltages + 1 neutral voltage (2VPP + VN)

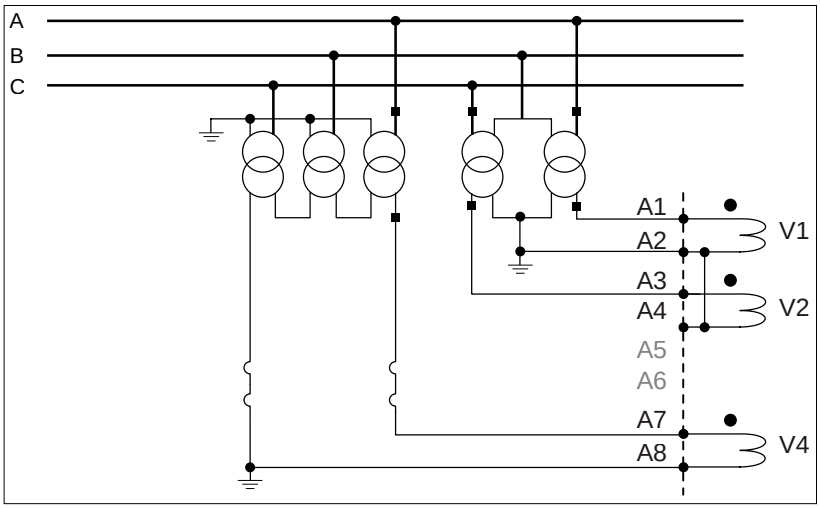

Figure 54 - 1 phase to phase voltage + 1 phase to phase voltage (VPP/VPPy)

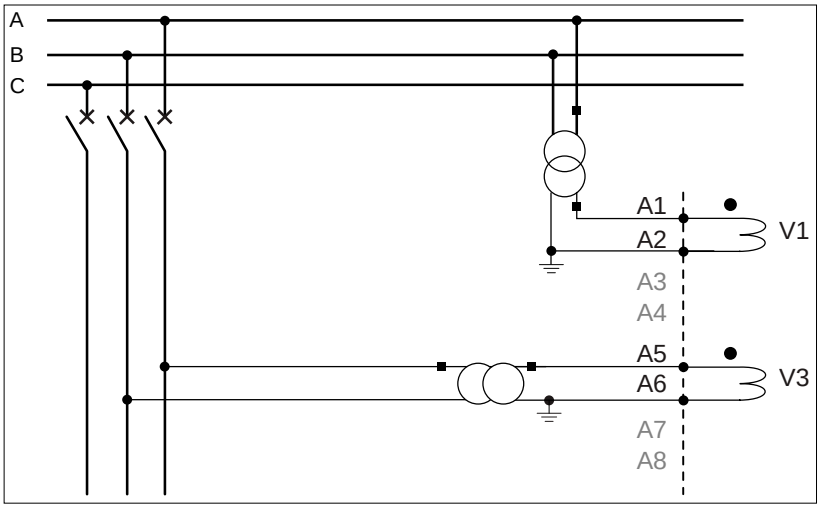

Figure 55 - P5T30 with neutral voltage (VN)

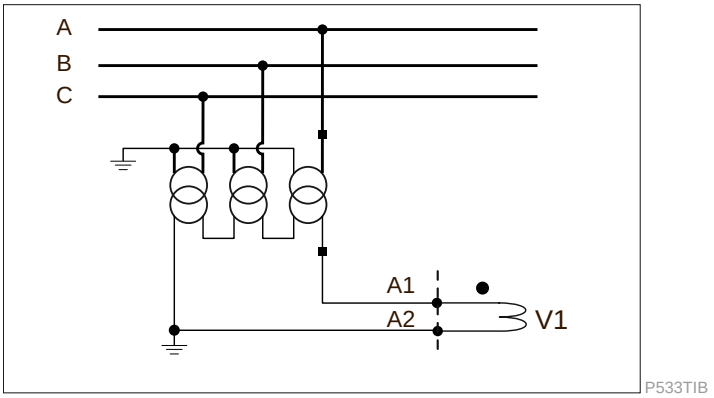

LPVT typical application

Figure 56 - 3 phase to neutral LPVT (3VP)

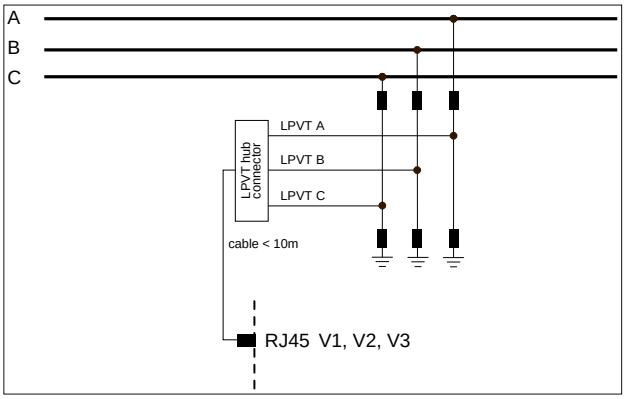

Figure 57 - 3 phase to neutral LPVT + 1 phase to neutral LPVT (3VP/VPy)

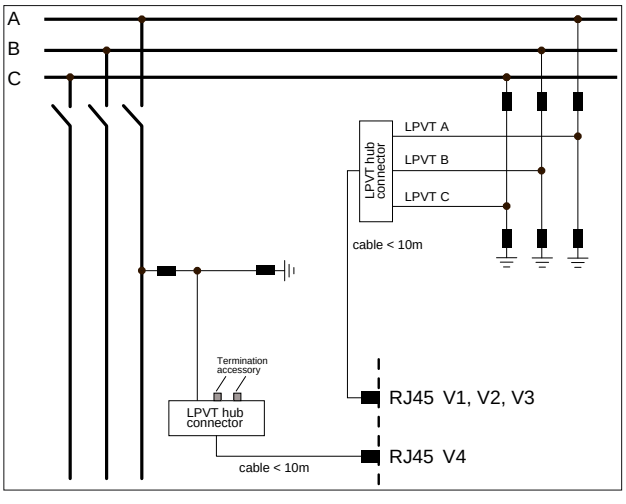

NOTE: If one or two LPVTs are connected to the LPVT hub connector (accessory ref. EMS59573), the termination accessories should be plugged to the 2nd and third input. These termination accessories are delivered with each LPCT/LPVT hardware variant in accessories bag. In case the accessories are lost, it is recommended to order spare part accessories for LPCT/LPVT variant (REL51079).

LPVT adapter typical application

Figure 58 - 3 phase to neutral voltages (3VP)

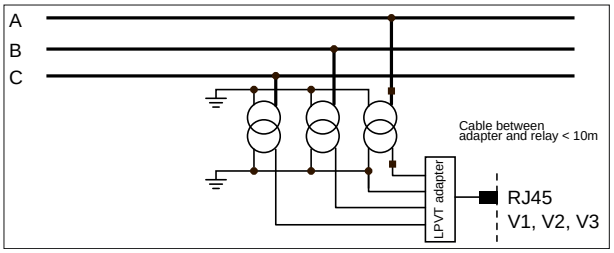

Figure 59 - 3 phase to neutral voltages + 1 neutral voltage (3VP+VN)

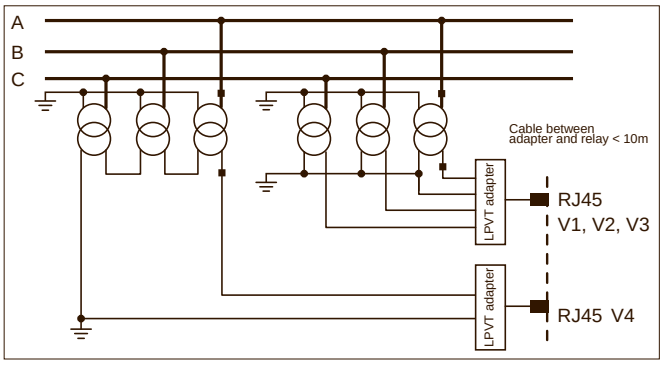

Figure 60 - 3 phase to neutral voltages + 1 phase to neutral voltage (3VP/VPy)

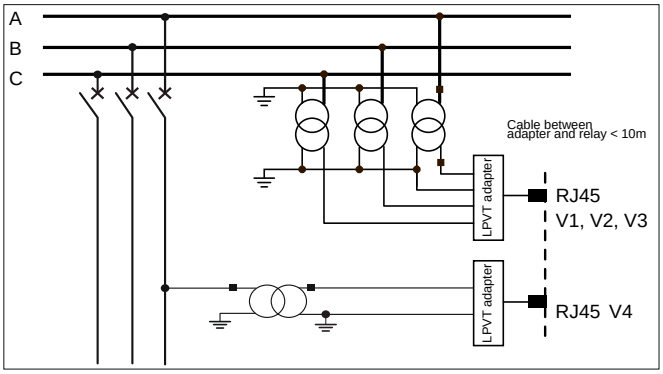

Figure 61 - 3 phase to neutral voltages + 1 phase to phase voltage (3VP/VPPy)

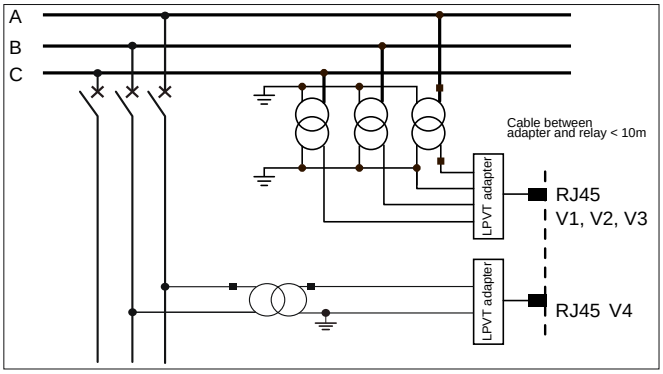

Wiring on the real panel

⚠ DANGER

FIRE HAZARD

Apply proper tightening torque to all wire connections.

Failure to follow these instructions will result in death or serious injury.

Slot A: analogue module

⚠⚠ DANGER

HAZARD OF ELECTRIC SHOCK, EXPLOSION OR ARC FLASH

- Use the appropriate (3 or 4-terminal) copper jumper for common connections.
- After cabling, protect the rear connector A with the two protective caps.

Failure to follow these instructions will result in death or serious injury.

Cabling kit for connector A

The PowerLogic P5 protection relays are delivered with a cabling kit for connector A. Depending on the type of analogue inputs of the protection relay, one of the following packages will be provided for your device:

- Cabling kit for CT/VT analogue inputs, including:

Figure 62 - Connector A cabling kit for CT/VT analogue inputs (REL51078)

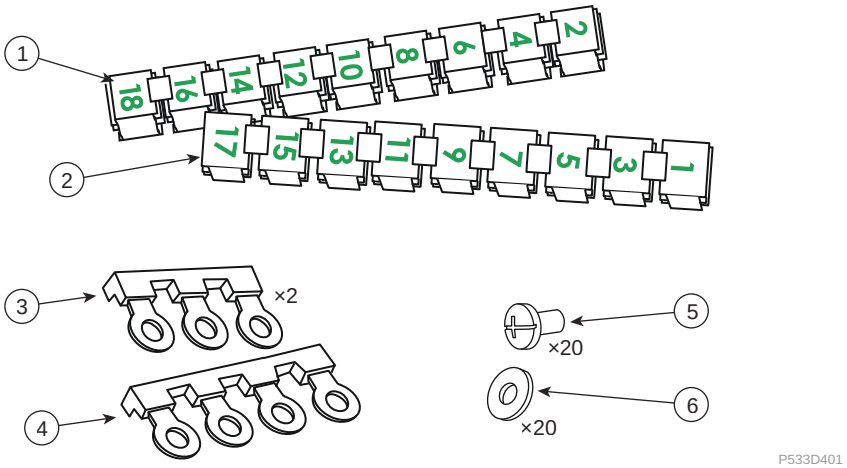

- One protective cap with even numbers marked ①
- One protective cap with odd numbers marked ②
- Two three-terminal jumpers ③
- One four-terminal jumper ④
- Twenty mounting screws ⑤ and washers ⑥

- Cabling kit for LPCT/LPVT analogue inputs, including:

Figure 63 - Connector A cabling kit for LPCT/LPVT analogue inputs (REL51079)

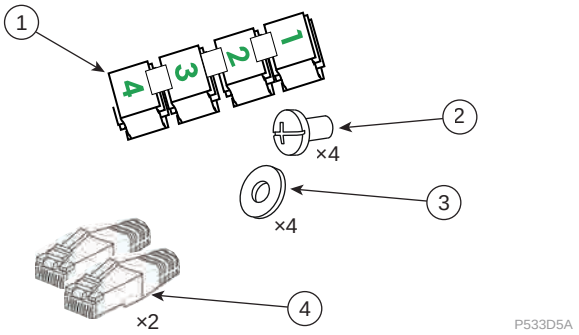

  - One four-terminal protective cap ①
  - Four mounting screws ② and washers ③
  - Two termination accessories ④

General cabling operation on connector A

The following procedure presents the general mounting and cabling operation on the connector A (for PowerLogic P5 model with 2 neutral CTs only):

1. Insert and connect the terminal jumper for common connections.

Figure 64 - Insert the terminal jumper (example with 4-pin comb-busbar)

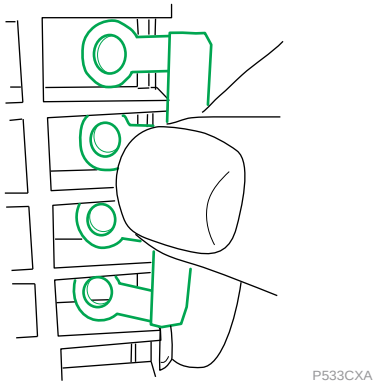

Tools	Application connection diagram

2. Fasten the terminal jumper with the provided mounting screws and washers.

Figure 65 - Fasten the terminal jumper (example with 4-pin comb-busbar)

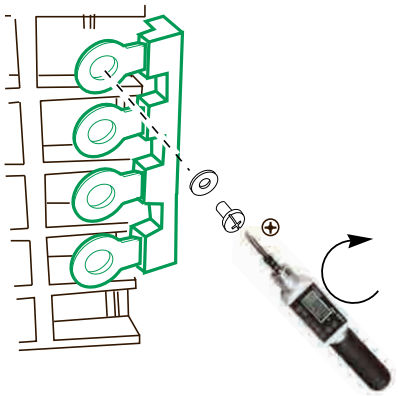

Fasteners	Mounting screws and washers included in the package
Tightening torque	1.2 N·m (10.6 lb-in)
Tool	Digital torque screwdriver with + PZ2 tip

3. Connect the bent ring lug end of the cables to the terminal using the provided mounting screws and washers.

Figure 66 - Connect the cable with bent ring lug

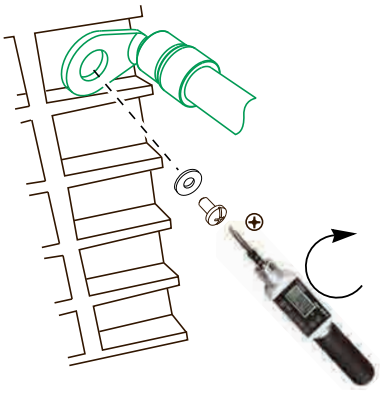

Fasteners	Mounting screws and washers included in the package
Tightening torque	1.2 N·m (10.6 lb-in)
Tool	Digital torque screwdriver with + PZ2 tip

4. After cabling, place and insert the protective caps on the terminal.

Figure 67 - Insert the protective cap

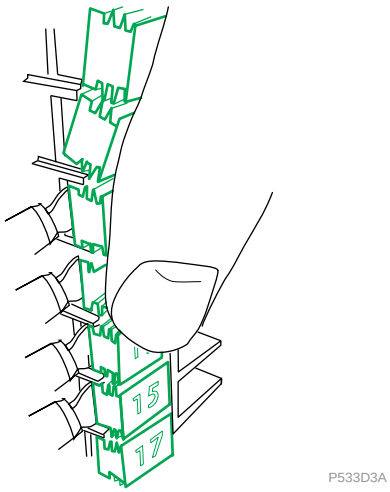

Phase voltage with VT inputs

The phase voltage inputs of PowerLogic P5F30/P5M30/P5L30 are situated in the upper part of the rear connector "A", terminals A1 to A8. The voltage measuring inputs are the following:

Figure 68 - Phase voltage inputs on connector A of PowerLogic P5F30/ P5M30/P5L30

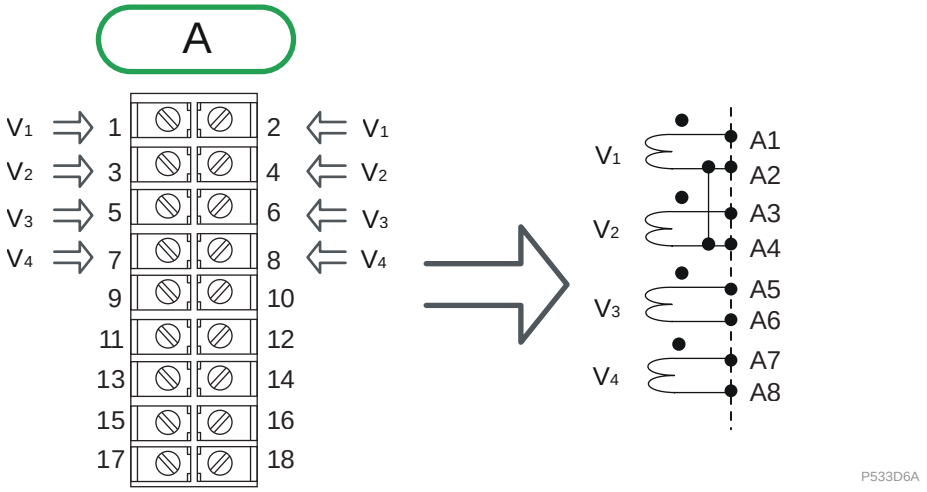

The phase voltage input of PowerLogic P5T30 is situated in the upper part of the rear connector "A", terminals A1 and A2. The voltage measuring inputs are the following:

Figure 69 - Phase voltage inputs on connector A of PowerLogic P5T30

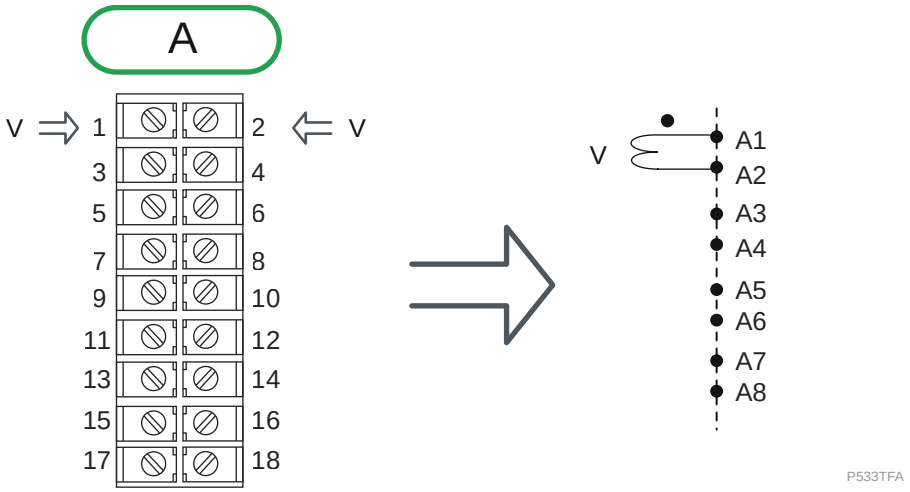

Phase currents with CT inputs and earth/ground fault current inputs

The current inputs of PowerLogic P5F30/P5M30/P5L30 are situated in the lower part of the rear connector A, terminals A9 to A18. The current measuring inputs are the following:

Figure 70 - Current inputs on connector A of PowerLogic P5F30/P5M30/P5L30

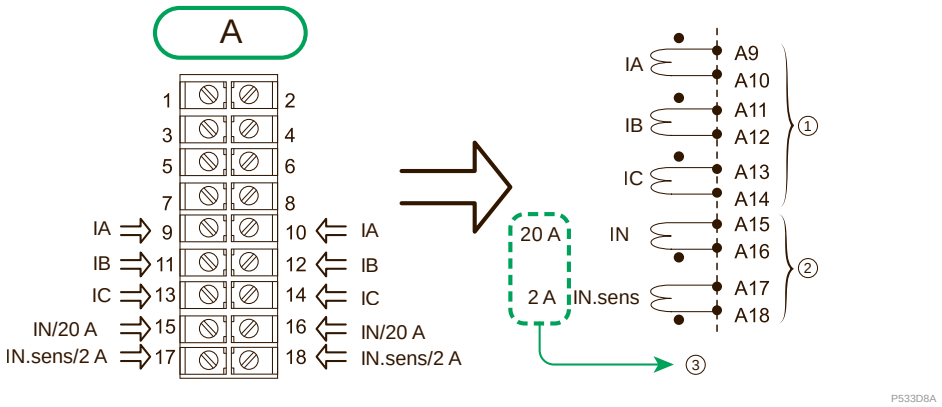

①	Current inputs
②	Neutral current inputs
③	Option with CSH core balance CT 2A or 20A
IN:	Standard earth/ground fault
IN.sens:	Sensitive earth/ground fault

The current inputs of PowerLogic P5T30 are situated in the lower part of the rear connector A, terminals A3 to A18. The current measuring inputs are the following:

Figure 71 - Current inputs on connector A of PowerLogic P5T30

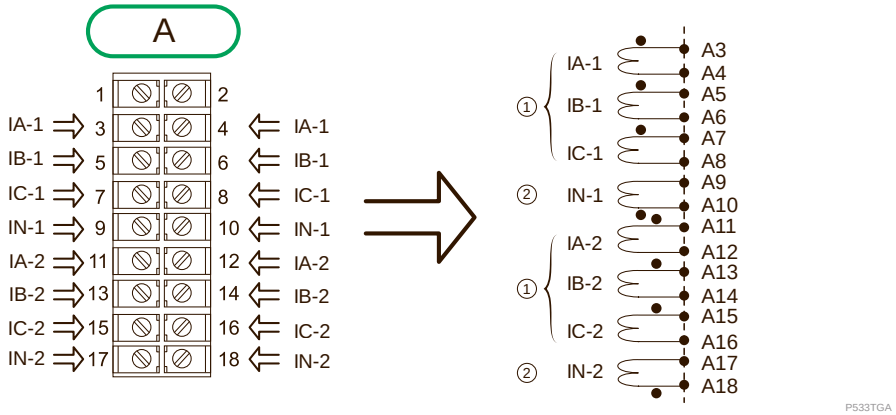

①	Current inputs
②	Neutral current inputs

NOTE: Communication modules may be replaced (for example, when communication network is modified). Take into account the access to these modules when you install and clamp rear connector wires.

Current Transformer Connections

The PowerLogic P5 protection relays use current transformers to measure phase or neutral currents. The current transformer connections are as follows:

Figure 72 - Connecting the current transformers with example of CSH earth/ ground fault connection (shielded)

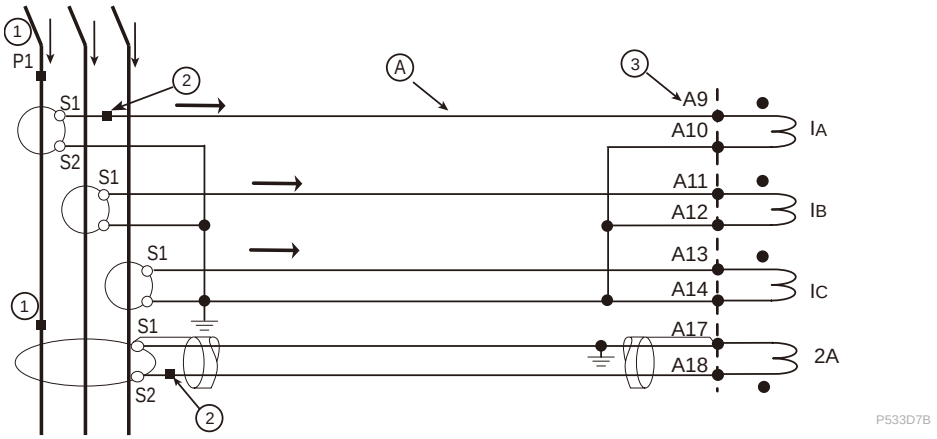

where:

① Terminal P1[35] (primary current).

② Terminal S1[35] (secondary current).

③ Connector A + terminal number.

Ⓐ Implementation of the cabling between the CTs and the connector:

- Conductors contained in the same strand, in a sheath
- Conductors run along the metal structures of the MV cubicle

Recommended cable for Schneider Electric's CSH120, CSH200, CSH300 and GO110 core balance CTs:

- Sheathed cable (to be compliant with electromagnetic compatibility requirements), shielded by tinned copper braid.
- Resistance per unit length < 100 mΩ/m (30.5 mΩ/ft).
- Minimum dielectric strength: 1000 V (700 Vrms).
- Connect the cable shielding in the shortest manner possible to PowerLogic P5.
- Flatten the connection cable against the metal frames of the cubicle.

The maximum resistance of the connection wiring must not exceed 4 Ω (20 m maximum for 100 mΩ/m or 66 ft maximum for 30.5 mΩ/ft).

Wiring details

Refer to the table below for the detailed information on wiring the screw-type input connectors of the analogue module in slot A:

Applicable cable end	Wire gauge	Tightening torque	Tool	
Ø 1 = 4 mm (0.16 in.) Ø2 < 8.5 mm (0.33 in.)	0.5 ... 1.5 mm² (AWG 20 ... 16) 1.5 ... 2.5 mm² (AWG 16 ... 14) 2.5 ... 6 mm² (AWG 14 ... 10)	1.2 N·m (10.6 lb-in)	(-) 6.5 mm (1/4 in.) screwdriver	(+) PZ2 screwdriver

35. Markings of current transformer terminals S1, S2, P1 and P2 according to IEC 61869-1 Standard

LPCT inputs

NOTICE

UNITENDED EQUIPMENT OPERATION

Use the original cable from OEM with a cable no longer than 10 m (32.8 ft) for EMC immunity.

Failure to follow these instructions can result in improper operation.

Figure 73 - LPCT inputs on slot A

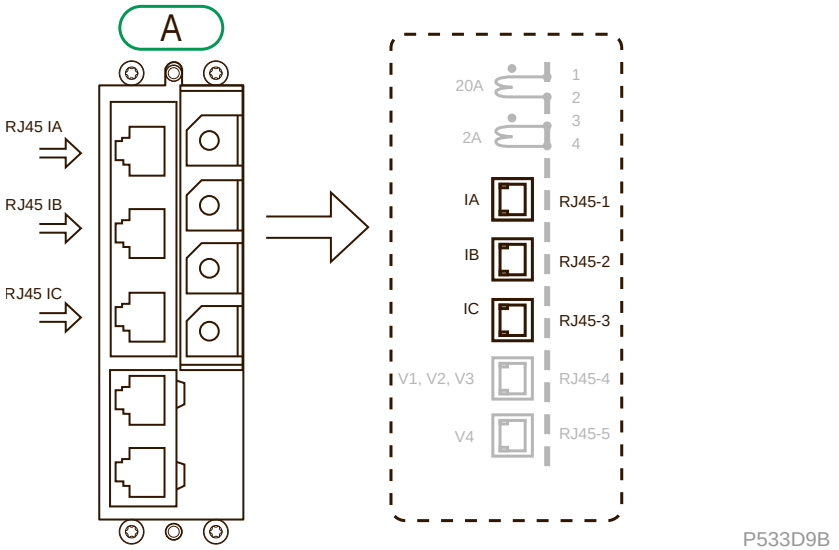

An LPCT sensor is characterised among other parameters by:

- The rated primary current I_{pr} (value of the primary current for U_{ser} secondary voltage output)
- The rated extended primary current I_{epr}
- The rated secondary voltage is 22.5 mV

The LPCT input of the PowerLogic P5 protection relay is characterised by the rated input voltage that depends on the rated extended primary current of the sensor. As an LPCT sensor covers a wide range of primary current and therefore has a high dynamic input here it is necessary to adapt the input interface of the relay to the primary current selected. More generally the LPCT inputs must be compliant with the IEC61869-10 standard.

Parameter	Value	Comment
Rated secondary voltage	22.5 mV	
Rated primary current factor	0.25 - 0.50 - 1.00 - 1.25 - 1.33 - 2.00 - 2.50 - 3.20 - 4.00 - 5.00 - 6.30 - 6.66 - 10 - 16 - 20 - 31.5	This configuration parameter corresponds to the rated extended primary current factor of the LPCT.

LPVT inputs

NOTICE

UNITENDED EQUIPMENT OPERATION

Use the original cable from OEM to connect to the hub or merger. The total cable length between LPVT and P5 cannot exceed 10 m (32.8 ft) for EMC immunity.

Failure to follow these instructions can result in improper operation.

Figure 74 - LPVT inputs on slot A

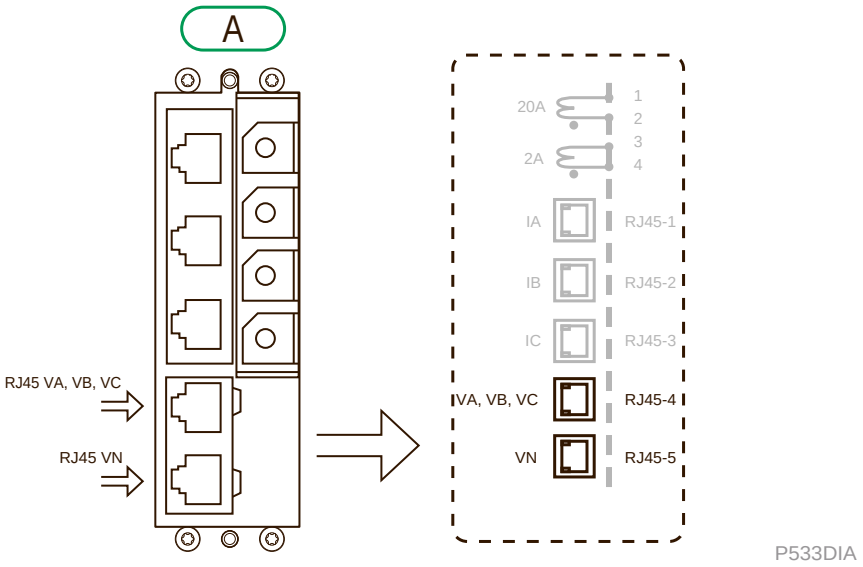

More generally the LPVTs inputs must be compliant with the IEC61869-11 standard.

The table below lists the technical data concerning the ratings and limits of the LPVT channels:

Parameter	Value
Rated secondary voltage	3.25 V / √3
Extended rated voltage	0.25 to 1.5 rated voltage

Digital input connections

The PowerLogic P5 protection relays provide two types of digital inputs:

- Digital inputs isolated from earth/ground and independent.
- Digital inputs isolated from earth/ground, with a common connection point.

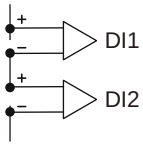

P533REB

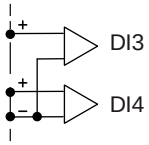

P533RFB

The operating nominal voltage for digital inputs is:

- 24 V DC to 250 V DC
- 90 V AC to 230 V AC

The activation voltage threshold is software settable. More information can be found on Digital inputs, page 521 section.

The isolated independent digital inputs are isolated from earth/ground, and each other. They should be used to acquire data from the following digital sensors:

- Non-isolated sensors (earthed/grounded).
- Remote sensors.
- Sensors from several zones in the installation that do not have equipotential bonding.
- Sensors from different devices.

To help ensure that each digital input is isolated, each digital input must be connected with an independent cable.

The isolated digital inputs with a common connection point are isolated from earth/ground, but are not isolated in relation to one another (common point). They should be used to acquire data from the following digital sensors:

- Isolated sensors.
- Sensors that are not isolated but come from the same zone of an installation with equipotential bonding.
- Sensors that preferably come from the same equipment. The different digital inputs are contained in the same cable.

The electrical conductors connected to the digital inputs of the PowerLogic P5 protection relays should run along the metal structures of the cubicle to reduce earth/ground loops. The conductors are contained in the same strand and, if possible twisted, to avoid the creation of cabling loops.

NOTICE

UNITENDED EQUIPMENT OPERATION

When connecting the digital inputs:

- Avoid large cabling loops in the various power supplies.
- Do not short-circuit any of the galvanic insulation.

Failure to follow these instructions can result in improper operation or equipment damage.

When the environmental and installation conditions are highly unfavorable for the PowerLogic P5 protection relay, a shielded twisted pair should be used. In such cases, the cable shielding is connected to the local earth/ground at both ends (provided that the installation has an equipotential bonding network).

Slot B: power supply + digital 4-input/4-output

Power supply

⚠ DANGER

FIRE HAZARD

- Protect the power supplying circuit of the PowerLogic P5 protection relay against overcurrents.
- For breaking capacity higher than 40W with L/R = 40 ms, protect the digital output contacts with an additional customer protection (RC or zener diode).

Failure to follow these instructions will result in death or serious injury.

The power supply range and inrush currents are provided for easier selection of Miniature Circuit Breaker (MCB).

Protection relay	Power supply range	Inrush current
PowerLogic P5x20	100...230 V AC	< 5 A 230 V AC
	24...250 V DC	< 8 A 250 V DC
PowerLogic P5x30	100...230 V AC	< 5 A 230 V AC
	48...250 V DC	< 8 A 250 V DC
	24...48 V DC	< 4 A 48 V DC

The nominal voltage range of PowerLogic P5 protection relays is specified on the reference label (local panel).

NOTICE

POWER SUPPLY DAMAGE

Before connecting the auxiliary voltage to the PowerLogic P5 protection relay, make sure the nominal value of the auxiliary device voltage corresponds with the nominal value of the auxiliary system voltage.

Failure to follow these instructions can result in equipment damage.

Figure 75 - Power supply terminals on connector B

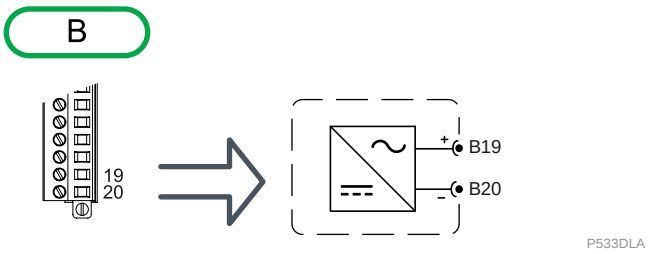

Digital inputs/outputs

The digital 4-input/4-output module (4I4O) is always mounted in slot B of an PowerLogic P5 protection relay. Digital outputs DO1, DO2 and DO3 are specifically enhanced for circuit breaker (CB) control. Digital output WD is defined as a Watchdog.

The operating nominal voltage for digital inputs is:

- 24 V DC to 250 V DC

- 90 V AC to 230 V AC

The configuration of the 20-terminal connector of the module is shown in the following figure:

Figure 76 - Configuration of connector B

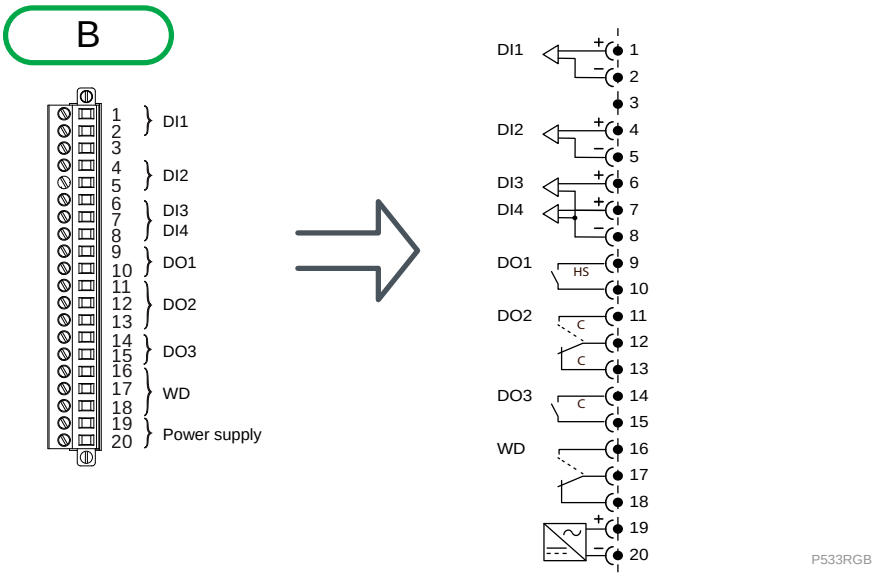

Watchdog

The watchdog (self-monitoring) is a changeover contact provided on slot B, digital output WD, to indicate the health of the device (refer to Watchdog relay, page 613). Schneider Electric strongly recommends that these contacts are hardwired into the substation's automation system for alarm purposes.

Figure 77 - Watchdog terminals on connector B

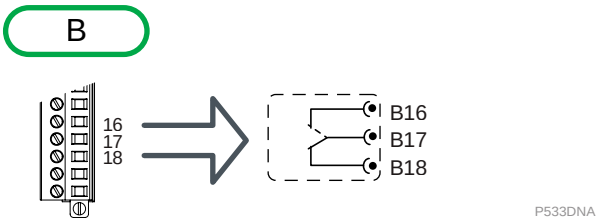

NOTE: Refer to Wiring accessories for Slot B, C, D, E, page 93 for the detailed information on wiring the terminals of this module.

Slot C, D, E: additional digital input/output modules (6I4O/12I4O/5I5O)

The PowerLogic P5 protection relay can be provided with additional digital input/output modules (6I4O, 12I4O and 5I5O) in slot C, D and E (only slot C in P5x20). The configuration of the 20-terminal connector of the module is shown in following image:

Figure 78 - Configuration of connector

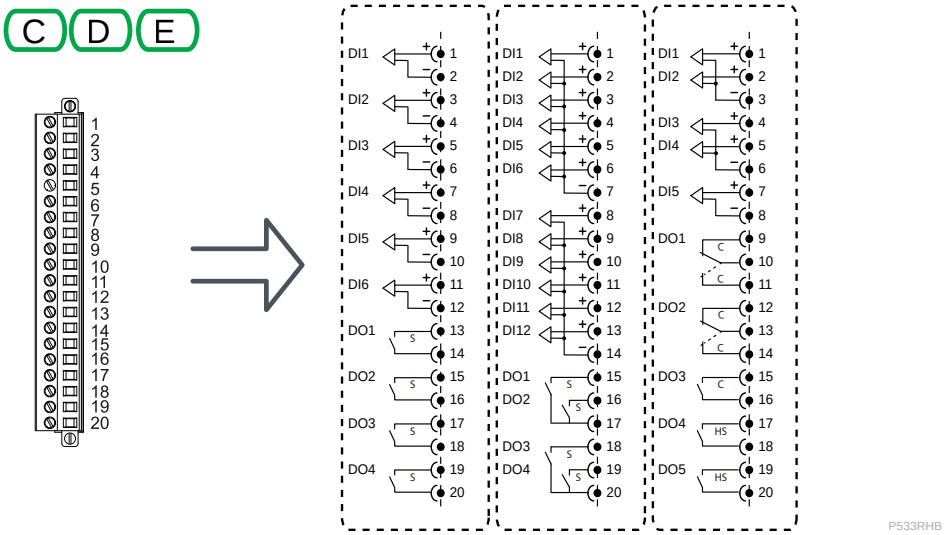

NOTE: Refer to Wiring accessories for Slot B, C, D, E, page 93 for the detailed information on wiring the terminals of this module. And refer to Slot occupation rules, page 653 for the information on the slot occupation rules.

The DI1 input on 12I4O can be used as a standard digital input (by default) or as a counting input.

NOTICE

UNINTENDED EQUIPMENT OPERATION

Specific wiring requirements for the counting input 12I4O DI1:

- Unshielded twisted pair cable between pin 1 and pin 7
- 0.4 to 1.5 mm² cross section
- Example of recommended cable : Belden 9409 or equivalent
- No earth/ground connection on the PowerLogic P5 side or on the other side to keep the line symmetrical
- Maximum cable length: 10 m

Failure to follow these instructions can result in equipment damage.

NOTICE

UNINTENDED EQUIPMENT OPERATION

When the counting input DI1 on 12I4O is selected, this input cannot be used by any other protection functions.

Failure to follow these instructions can result in equipment damage.

Slots D and E: Arc-flash module (for PowerLogic P5x30 only)

The PowerLogic P5x30 can be equipped with up to 2 Arc-flash modules (with 3 light sensor inputs, 3 digital inputs and 3 digital outputs each) in its slot D and E.

The configuration of the 20-terminal connector of the Arc-flash module is shown in following image:

Figure 79 - Configuration of terminals in Slot D and E

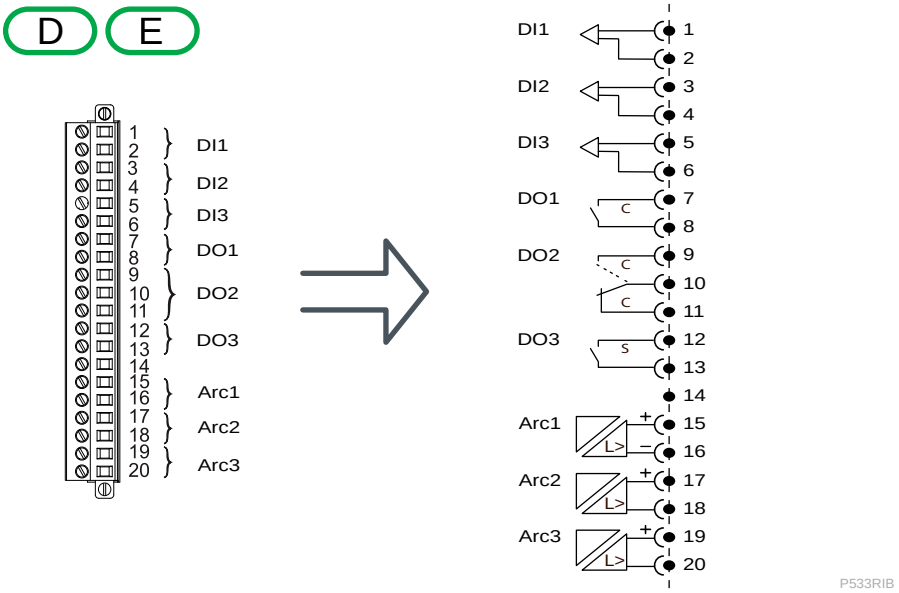

NOTE: Refer to Wiring accessories for Slot B, C, D, E, page 93 for the detailed information on wiring the terminals of this module.

Installing the digital I/O connectors

The digital I/O connectors provided with the protection relay are mounted on the rear panel fixed with screws came with the connectors.

Figure 80 - Installing digital I/O connectors on the rear panel

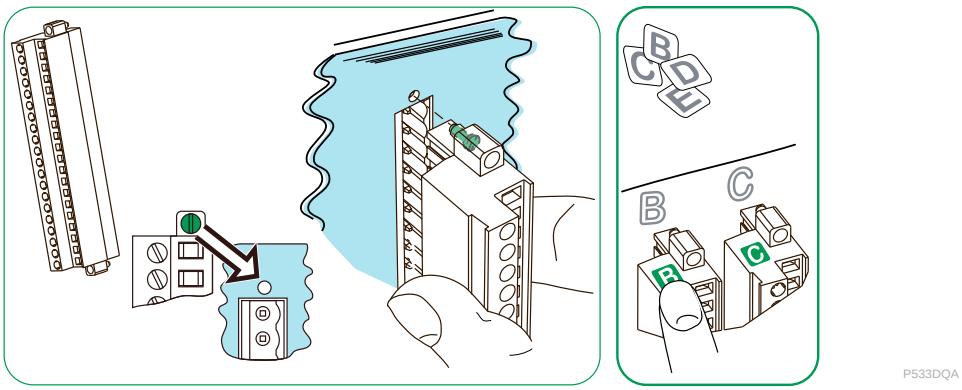

Tool	2.5 mm (3/32 in.) flat screwdriver
Tightening torque	0.4 N·m (3.5 lb-in)
Subsequent operation	Identification labels of connector are included in the package. After connectors installed, stick the labels on rear top of the connectors.

Wiring accessories for Slot B, C, D, E

Wiring the screw-type terminals

The detailed information for wiring the screw-type DI/DO terminals in slot B, C, D, and E is listed in the table below:

Cable end	Wire gauge	Tightening torque	Tool
Contact tip length L = 12 mm (0.5 in.)	Single wire: 0.2 ... 2.5 mm² (AWG 24 ... 14) Double wires: 0.2 ... 1.5 mm² (AWG 24 ... 16)	0.4 ... 0.5 N·m (3.5 ... 4.4 lb-in)	(—) 2.5 mm (3/32 in.) flat blade screwdriver

Connecting earth/ground

⚠⚠DANGER

HAZARD OF ELECTRIC SHOCK, EXPLOSION OR ARC FLASH

- Connect the PowerLogic P5 protection relay to earth/ground with a nut and washer using any of the indicated stud terminals (see figure Fixing the earthing/grounding cable to the PowerLogic P5 protection relay, page 94).
- Check equipotential earthing/grounding network and test earth/ground during installation.

Failure to follow these instructions will result in death or serious injury.

The earth/ground connections are accessible on the rear panel of the protection relays. For PowerLogic P5x20, there are two connectors located in the bottom left and right corner of the protection relays; for PowerLogic P5x30, there are three, one in the bottom right corner and the other two near Connector A.

Figure 81 - Earth/ground studs on PowerLogic P5x20

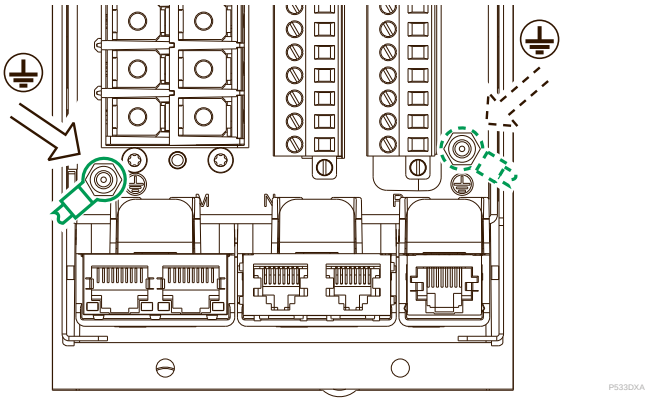

Figure 82 - Earth/ground studs on PowerLogic P5x30

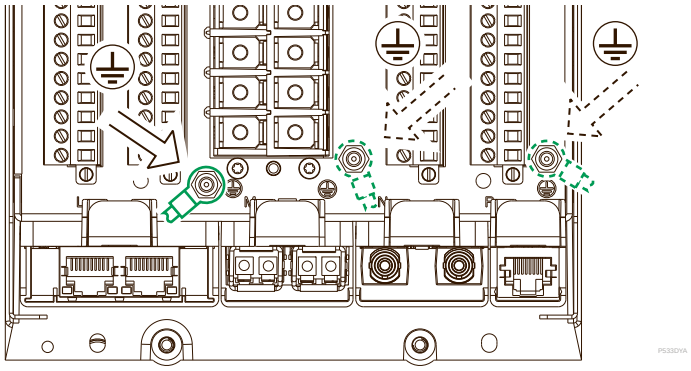

Figure 83 - Fixing the earthing/grounding cable to the PowerLogic P5 protection relay

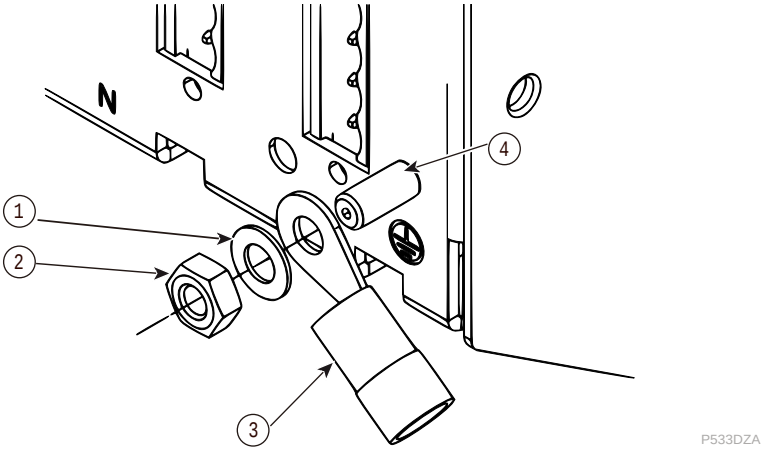

①	Washer	③	Earthing/grounding cable
②	M4 hexagon nut	④	Earth/ground stud on the protection relay

Every PowerLogic P5 must be connected to the local earth/ground bar using one M4 earth/ground stud on the relay case to help prevent dangerous voltages being present in case of a wiring fault or damage to the product. Also, it helps ensure that the PowerLogic P5 protection relay meets EMC claims.

Figure 84 - Compartment earthing/grounding terminal

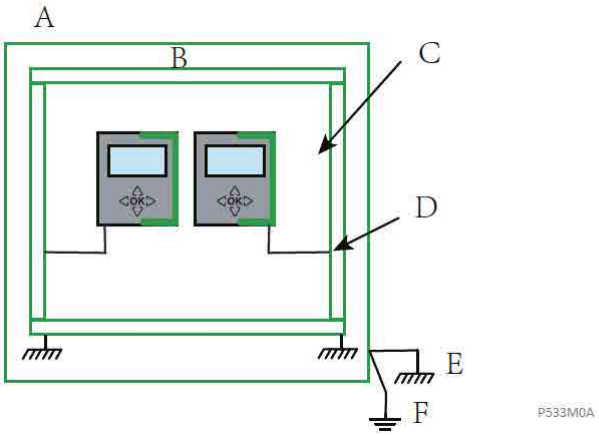

A	Metal upright of the LV compartment	D	Earth/ground connection made to a surface with no paint, varnish or any insulating material. Spring washers must be used.
B	LV compartment	E	Local earth/ground
C	The PowerLogic P5 protection relay is installed in the LV compartment near the earthing/grounding terminal or near one of the metal uprights.	F	Electrical protection

The minimum recommended wire size is 2.5 mm² (AWG 14) and should have a ring terminal at the relay end. Due to the limitations of the ring terminal, the maximum wire size that can be used is 6.0 mm² (AWG 10) per wire.

Terminal type	Applicable cable end	Wire gauge	Max. wire length	Tightening torque	Tool
earth/ ground stud	Ø = 4 mm (0.16 in.)	2.5 ... 6 mm2 (AWG 14 ... 10)	50 cm (21 in.)	1.2 N·m (10.6 lb-in)	socket wrench for M4 screw

NOTE: To avoid any possibility of electrolytic action between brass or copper earth/ground conductors and the rear panel of the protection relay, precautions should be taken to isolate them from one another. It is recommended to place a nickel-plated or insulating washer between the conductor and PowerLogic P5 case or to use tinned ring terminals.

Optional rear communication ports and modules

Location of the communication ports

NOTICE
UNITENDED EQUIPMENT OPERATION Use RJ45 cable no longer than 100 m (328 ft). **Failure to follow these instructions can result in improper operation.**

The PowerLogic P5 protection relay range includes optional rear communication ports and modules with RJ45 or fibre optic connections. The ports and modules are accessible in the lower part of the rear panel. The following figure shows the location of these single or dual communication ports and modules:

PowerLogic P5x20 PowerLogic P5x30

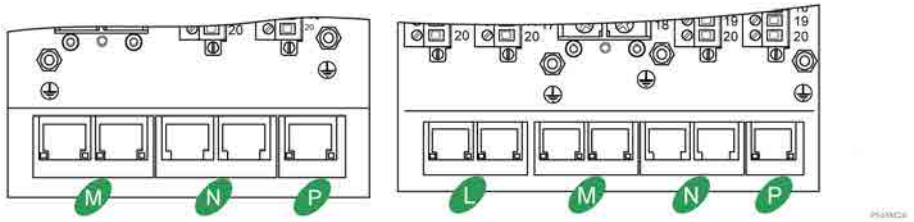

	PowerLogic P5x20	PowerLogic P5x30
Slot L	-	Dual port Ethernet TP module with RSTP redundancy
	-	InterRelay module(FO)
Slot M	Dual port Ethernet TP or fibre optic module, configurable to RSTP redundancy mode or Dual IP mode without redundancy	
Slot N	Dual port RS485 or fibre optic serial communication module	
Slot M + N	Combined Ethernet HSR/PRP 2TP + RS485 module or Combined Ethernet HSR/PRP FO + RS485 module	
Slot P	Extension port for external modules (IRIG-B time synchronisation and/or RTD inputs module) with backup memory	
	Extension port for external modules (IRIG-B time synchronisation and/or RTD inputs module) with backup memory and Zigbee receiver.	

Installing the modules

NOTICE

UNITENDED EQUIPMENT OPERATION

- Verify that the communication modules are locked on the protection relay.
- Never plug in or draw out the communication modules while the PowerLogic P5 protection relay is in service, otherwise the PowerLogic P5 protection relay will reboot and consequently lose the setting changes made within the last 30 minutes.

Failure to follow these instructions can result in setting change erasure and consequently mis-operation of the protection relay.

The communication modules are designed with a self-locking structure. After sliding along the bottom slots and fixing into position, the module locks itself in final place. The green flippable locker at one end locks the communication module in place.

Figure 85 - Installing the communication module

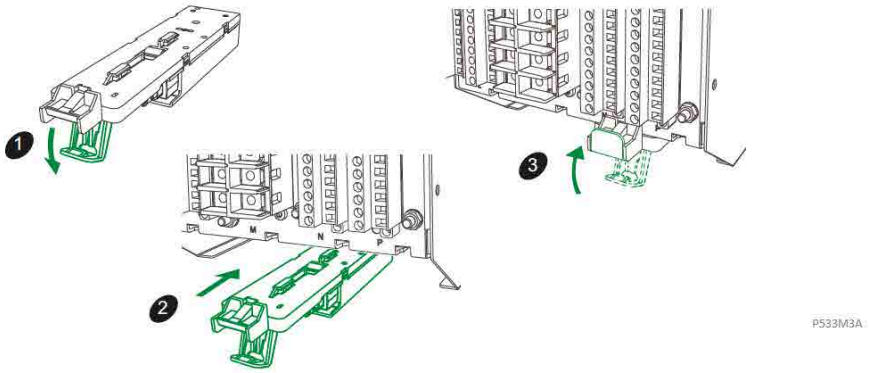

Slot L: Ethernet communication module with RSTP redundancy (reference REL51042)

Used for PowerLogic P5x30 only

The Ethernet communication module is installed in slot L of PowerLogic P5x30. It is an optional selection when ordering the device or can be purchased after on-site installation.

It works with RSTP protocol, which allows fast reconfiguration of the communication system.

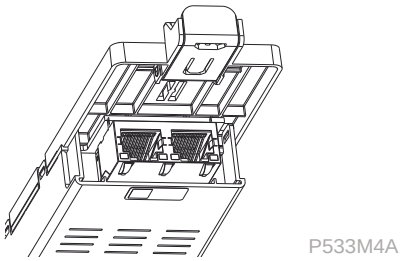

Figure 86 - Example of Ethernet module connection

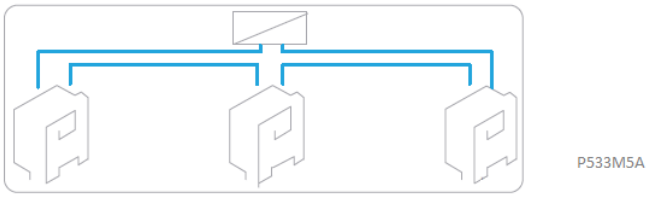

Table 7 - Characteristics of the Ethernet communication module (reference REL51042)

Characteristics	
Location	Slot L
Connection	2 x RJ45 connectors with communication indicators 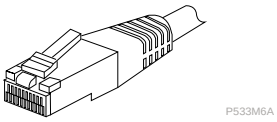
Ethernet connection	10/100 Mbps
Protocol	TP or RSTP
Maximum cable length	100 m (328 ft)

Slot L: Protection communication module with SDLC (references REL51053 and REL51043)

Used for PowerLogic P5x30 only

The serial communication module is mounted in slot L of PowerLogic P5x30. It is a necessary module for P5L30 and can be selected as an option when ordering the device or purchased later and installed on site.

It provides proprietary InterRelay communication between any 2 P5x30 relays, and additionally data exchange for line differential protection between 2 P5L30 relays.

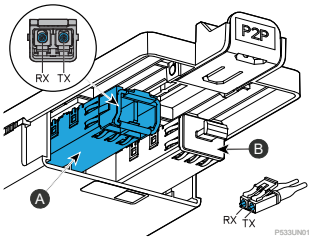

A	Available port for the SFP module	B	Port currently not used

Figure 87 - Example of InterRelay module connection

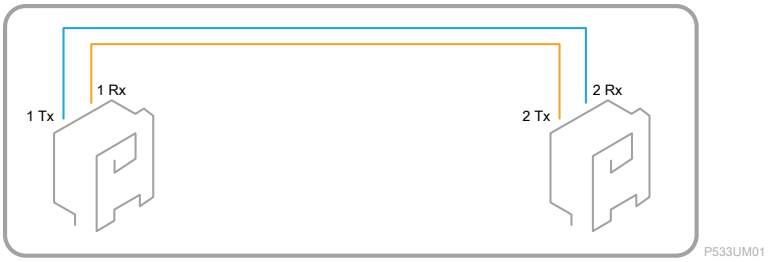

Figure 88 - Example of InterRelay connection

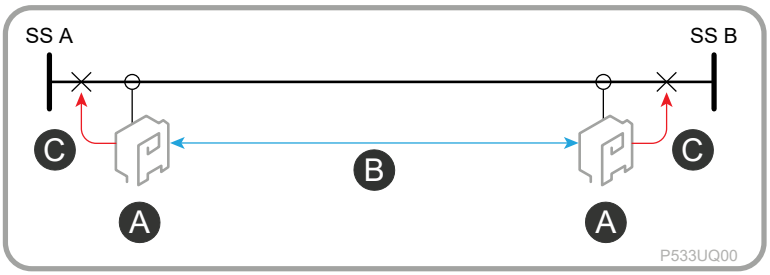

A	PowerLogic P5x30	B	Protection communication, transfer of digital data (start, trip, direction...).
C	Trip		

There are 2 InterRelay modules for selection, REL51053 for 2 km and REL51043 for 40 km communication distance. Their characteristics are listed separately in the 2 following tables.

Table 8 - Characteristics of the InterRelay module with 2 km multi-mode SFP (reference REL51053)

Characteristics	
Location	Slot L
Connection	2 LC connectors

Table 8 - Characteristics of the InterRelay module with 2 km multi-mode SFP (reference REL51053) (Continued)

Characteristics	
	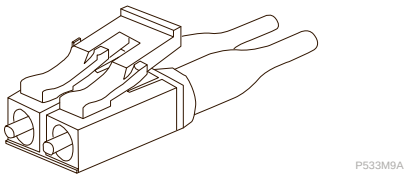
Baud rate	56 Kbps, 64 Kbps, 115.2 Kbps, 2 Mbps
Protocol	SDLC
Optical wavelength	1310 nm
Fibre type	Multi-mode
Maximum attenuation (fibre optic + connectors)	11.6 dB
Maximum range	2 km (1.2 mi)

Table 9 - Characteristics of the InterRelay module 40 km single-mode SFP (reference REL51043)

Characteristics	
Location	Slot L
Connection	2 LC connectors 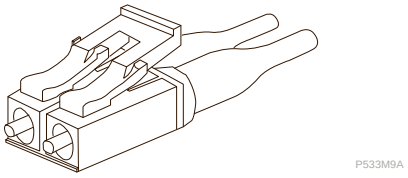
Baud rate	56 Kbps, 64 Kbps, 115.2 Kbps, 2 Mbps
Protocol	SDLC
Optical wavelength	1310 nm
Fibre type	Single-mode
Maximum attenuation (fibre optic + connectors)	30 dB
Maximum range	40 km (24.9 mi)

NOTE: The SFP modules in the list below have been validated to work properly with PowerLogic P5:

Maximum distance	Module
2 km	HFBR-57E5APZ (Avago or Broadcom)
40 km	AFCT-5765ANLZ (Avago or Broadcom) FTLF1323P1BTL (Finisar)

The SFP module FTLF1518P1BTL of Finisar can be used for communication for distance up to 80 km distance at 2 Mbps baud rate, 1550 nm wavelength single-mode.