Table 59 - Settings and characteristics of the neutral admittance protection (Continued)

Settings/ characteristics (description/label)	Values
Accuracy	±5%
Reset ratio	90% ± 5%
Pick-up value/BN>1	
Setting range	(1%...100%) IN/VN[61] for current measured by sensitive earth/ground fault CTs (5%...500%) IN/VN[61] for current measured by standard earth/ground fault CTs (5%...500%) IN/VN[61] for current measured by standard earth/ground fault CTs (for CSH30 use) (25%...2500%) IN/VN[61] for current measured by 2A CSH, 20A CSH, and for current value that is calculated
Resolution	1% IN/VN[61] for current measured by sensitive earth/ground fault CTs 5% IN/VN[61] for current measured by standard earth/ground fault CTs 25% IN/VN[61] for current measured by 2A CSH, 20A CSH, and for current value that is calculated
Accuracy	±5%
Reset ratio	90% ± 5%
Direction mode/Direction mode	
Options	Non-dir; Forward; Reverse
Operate delay/Operate delay	
Setting range	0.00...300.00 s
Resolution	0.01 s
Accuracy	±5% or ±50 ms
SOL1/SOL1	
Options	Disable/Enable
SOL operate delay/SOL operate delay	
Setting range	0.00...300.00 s
Resolution	0.01 s
Accuracy	±5% or ±20 ms
Reset delay/Reset delay	
Setting range	0.00...100.00 s
Resolution	0.01 s
Accuracy	±5% or ±20 ms
Input for inhibit control/Inhibit control	
Options	Digital inputs and virtual inputs for selection
Characteristic time	
Start time	≤ 65 ms at 2 YN>1 100 ms at maximum
Overshoot time	≤ 40 ms at 2 YN>1
Setting group/SetGrp	
Number	4

61. YN.nom

Transformer Overfluxing Protection (ANSI 24)

Description

Overview

This Transformer Overfluxing Protection (ANSI 24) function is applied for P5T30.

The transformer overfluxing protection detects an inadmissibly high induction in the iron core of transformers which may have been caused by a voltage increase and/or a frequency decrease.

Flux density of transformer $B = K \times U / f$

Where: K is a coefficient depending on iron core material and dimensions.

The degree of overexcitation can be expressed by the overexcitation multiple (the ratio based on nominal excitation Bn):

$$n = \frac{B}{B_n} = \frac{V/f}{V_n/f_n}$$ P533TJA

Where:

- n: the overexcitation ratio.
- B, B_n: actual and nominal values of flux density of transformer cores.
- V, V_n: actual and nominal voltage of transformer windings, phase to phase voltage.
- f, f_n: actual and nominal frequency.

According to the overexcitation ratio, one three-stage overfluxing (V/f) element protects the transformer against overexcitation:

- One alarm stage with DT delay (V/f Alarm)
- One trip stage with DT or IDMT delay (V/f>1)
- One trip stage with DT delay (V/f>2)

The element measures the ratio of voltage to frequency and operates when this ratio exceeds the setting. When the flux level drops below the reset value (set pickup value minus hysteresis), the reset timer starts.

Conditions

The element is valid only when the VT measures VP or VPP. Otherwise, the element is invisible on the HMI screen and in Easergy Pro.

Whether the VT measures VP or VPP, the voltage used in overfluxing element is VPP.

The element is operational only when the measured frequency is 45Hz to 55Hz for fnom = 50 Hz; 54Hz to 66Hz for fnom = 60 Hz.

The overfluxing element is equipped with a definite-time reset time for inverse-time trip characteristic.

Function decomposition

V/f Alarm stage (DT)

The definite-time alarm stage is used to indicate unhealthy conditions before damage of the transformer. The “V/f Alarm” signal is issued when the

overexcitation multiple is greater than the setting of pick-up value of the operate delay.

The “V/f Alarm” signal can be issued only when “Enable for V/f Alarm” is on.

V/f>1 Trip stage (DT/IDMT)

V/f>1 trip stage can be set to operate with a definite time (DT) or inverse time delay (IDMT), as per set “Operating curve”. This stage can be used to provide the protection trip output.

The “V/f>1 Start” and “V/f>1 Trip” signals can be issued only when “Enable for V/f>1” is on.

Definite-time delay

When the overexcitation multiple is greater than the setting of pick-up value, “V/f>1 Start” signal will be issued. The “V/f>1 Trip” signal will be issued in case of the “V/f>1 Start” signal is active for the operate delay.

Inverse-time delay

When the overexcitation multiple is greater than the setting of pick-up value, “V/f>1 Start” signal will be issued. There are three delay curves for selection of inverse time delay (IDMT) setting: Prg1, Prg2, Prg3. Each curve is composed by 16 operation values and delays. For overfluxing, the value of “Gs” is always 1.00. The “V/f>1 Trip” signal will be issued according to the operation values of selected curve.

Definite-time reset delay

Overfluxing is a thermal heating based function, therefore the reset timer starts whenever the flux level drops below reset value (= pick-up – hysteresis). The accumulated heat is linearly decreased from the present value down to zero over the course of the reset time. It will restart from half the previously accumulated level, if that level was 100%.

The following figure explains the reset characteristic. It will take the set reset time for the replica to reset completely to zero after the thermal replica reached 100% of V/f>1 Trip level. If the thermal replica has not reached 100% of V/f>1 Trip, the reset time will be reduced proportionally. For example, if the reset time setting is 100 s and the thermal replica reached only 50% of V/f>1 Trip level when V/Hz resets, the reset time will be 50 s, as shown in Stage 2. If another V/Hz excursion appears before replica reaches 0, the V/Hz time delay takes the remaining time left into consideration, as shown in Stage 3.

Figure 209 - Example of Reset characteristic

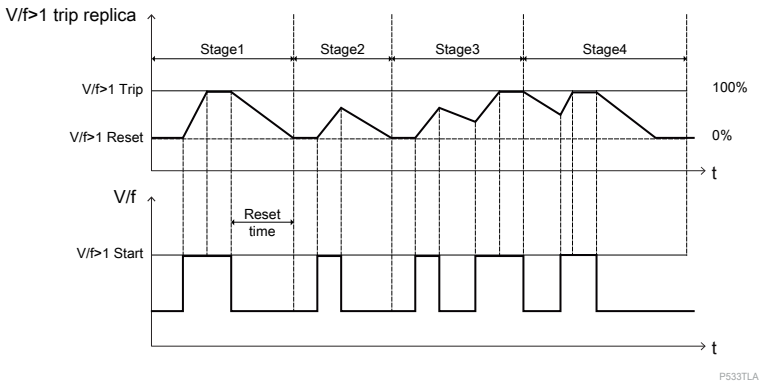

This implies that the V/f>1 trip replica is limited to 100% and kept at 100%, even if the V/f>1 Start condition persists (for example, broken trip circuit). Likewise, the V/f>1 trip replica never can drop below 0% level.

V/f>2 Trip Stage(DT)

The V/f>2 is a definite-time trip stage. The “V/f>2 Start” signal will be issued when the overexcitation multiple is greater than the setting of pick-up value. The “V/f>2 Trip” signal will be issued when the “V/f>2 Start” signal is active for the operate delay.

The “V/f>2 Start” and “V/f>2 Trip” signals can be issued only when “Enable for V/f>1” is on.

Block diagram

Figure 210 - Block diagram of the Transformer Overfluxing Protection (ANSI 24)

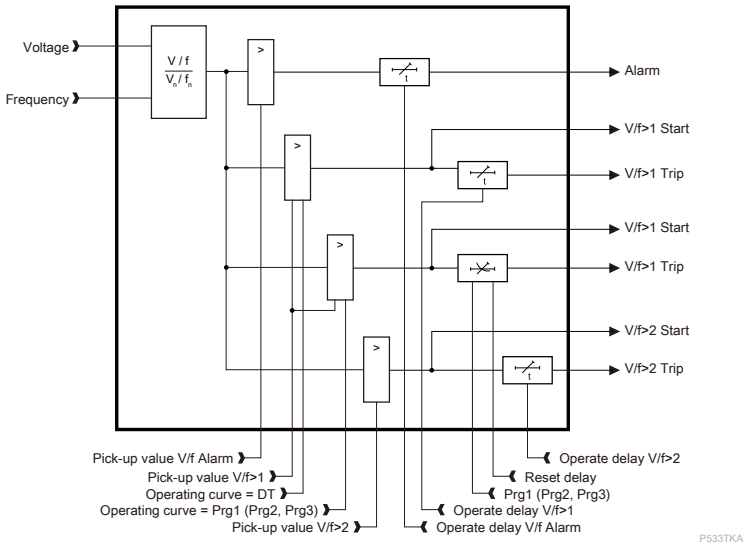

Characteristics

Table 60 - Settings and characteristics of the transformer overfluxing protection

Settings/characteristics (description/label)	Value
V/f>1 alarm stage	
Pick-up value	1.00...1.60
Accuracy of pick-up value	±2%
Operate delay	0...10000 s
V/f>1 trip stage	
Enable	On/Off
Pick-up value	1.05...1.60
Accuracy of pick-up value	±2%
Operate curve	DT, Prg1, Prg2, Prg3

Table 60 - Settings and characteristics of the transformer overfluxing protection (Continued)

Settings/characteristics (description/label)	Value
Definite-time delay	
Operate delay[62]	0...10000 s
Accuracy of definite-time delay	±1% or ±100 ms
Inverse-time delay	
Reset delay[63]	0...10000 s
Accuracy of inverse-time delay	±5% or ±100 ms
Accuracy of reset-time delay	±1% or ±100 ms
V/f>2 trip stage	
Enable	On/Off
Pick-up value	1.05...1.60
Accuracy of pick-up value	±2%
Operate delay	0...10000 s
Characteristics	
Starting resetting ratio	95% ±2%

62. Setting for the operate delay of the definite-time trip stage.
63. Setting for the reset time defines the decreasing rate at the inverse-time characteristic.

Synchro-check (ANSI 25)

Description

The synchro-check function (ANSI code 25) checks the synchronisation of the electrical networks on either side of a circuit breaker to avoid closing a breaker when phases are not aligned. This helps ensure that circuit breaker contacts have the minimum wear when closing and avoids excessive disturbance on the network.

The PowerLogic P5 protection relay includes a function that checks synchronism when the circuit breaker is open. The function monitors voltage amplitude, frequency and phase angle difference between two voltages.

The synchro-check function operates in different conditions according to three synchronisation modes: Sync, Async and Off.

In case that the synchro-check function is set to Sync mode, the conditions to operate are defined as below:

- The phase angle difference is less than 2°;[64]
- The frequency difference is less than the frequency difference setting;
- The magnitude difference is less than the voltage difference setting.

In case that the synchro-check function is set to Async mode, the conditions to operate are defined as when the phase angle difference, the frequency difference, and the magnitude difference are respectively below their setting values.

- The phase angle difference is less than the phase angle difference setting;
- The frequency difference is less than the frequency difference setting;
- The magnitude difference is less than the voltage difference setting.

In case that the synchro-check function is set to Off, the circuit breaker cannot be closed when the voltage is present on both sides.

The synchro-check function is available when one of the following analogue measurement modules and a suitable measuring mode is in use:

- VPP/VPPy
- 3VP/VPPy
- 3VP/VPy
- 2VPP+VN+VPPy

  NOTE: The voltage used for synchro-check is the phase to phase voltage. Where only phase to neutral is available the equivalent phase to phase voltage will be calculated.

The synchro-check function operates for a power system frequency between 46 Hz and 64 Hz.

The following signals of the stage are available in the output matrix and in the logic editor:

- “Request” signal

  This signal is active when a request has been received but the breaker is not yet closed.
- “OK” signal

  This signal is active when the synchronising conditions are met, or the voltage check criterion is met. See section "Voltage checking" below.

64. The values of phase angle difference [˚] are:
    - less than 0.1 ˚ when the frequency difference [Hz] is less than or equal to 0.003 Hz (3 mHz),
    - less than 0.5 ˚ when the frequency difference [Hz] is greater than 0.003 Hz (3 mHz) and less than or equal to 0.3 Hz,
    - less than 0.83 ˚ when the frequency difference [Hz] is greater than 0.3 Hz.

    The setting of phase angle difference is used as the reset threshold of synchro-check OK, the recommended setting value of **Phase angle difference [˚]** is *2* ˚.

- “Fail” signal

  This signal is activated, if the function fails to close the breaker within the request timeout setting. See The principle of the synchro-check function, page 307.

Figure 211 - The principle of the synchro-check function

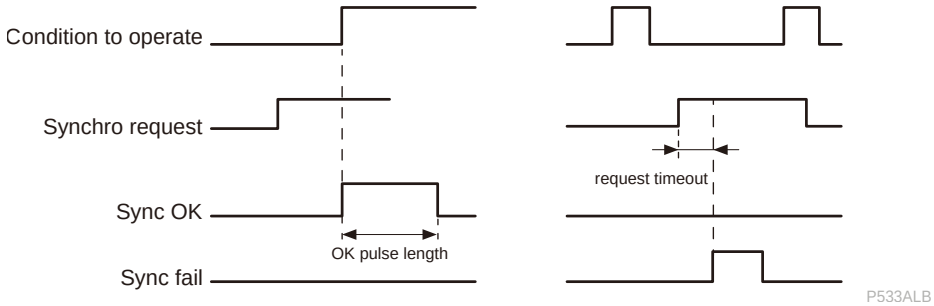

NOTE: The CB close time setting can be used to anticipate the closing of the CB and meet all the conditions to operate.

Voltage checking

When one of the two voltage is absent, coupling may be authorised according to one of the seven checking modes.

- VAB and VABy absent (DD)
- VAB absent and VABy present (DL)
- VAB present and VABy absent (LD)
- VAB absent regardless of VABy state (present or absent) (DD/DL)
- VABy absent regardless of VAB state (present or absent) (DD/LD)
- One voltage is present while the other one is absent (DL/LD)
- At least one voltage is absent (DD/DL/LD)

The presence of each voltage is detected by comparing the voltage to the Vlive limit setting. The absence of each voltage is detected by comparing the voltage to Vdead limit setting.

Synchro-check enable and bypass

In the application when circuit breaker closing should be guaranteed by synchro-check result, a parameter to define the circuit breaker should be configured, otherwise synchro-check result will not impact on the close operation, this parameter can be found under **Protection** menu/**Sync-check** sub-menu/**CB object 1**. Sometimes there are also the request to bypass sync-check result, this is also available in PowerLogic P5, which can be realised via the "Bypass" parameter under Protection menu/Sync-check sub-menu.

Block diagram

Figure 212 - Block diagram of the synchro-check protection function (ANSI 25)

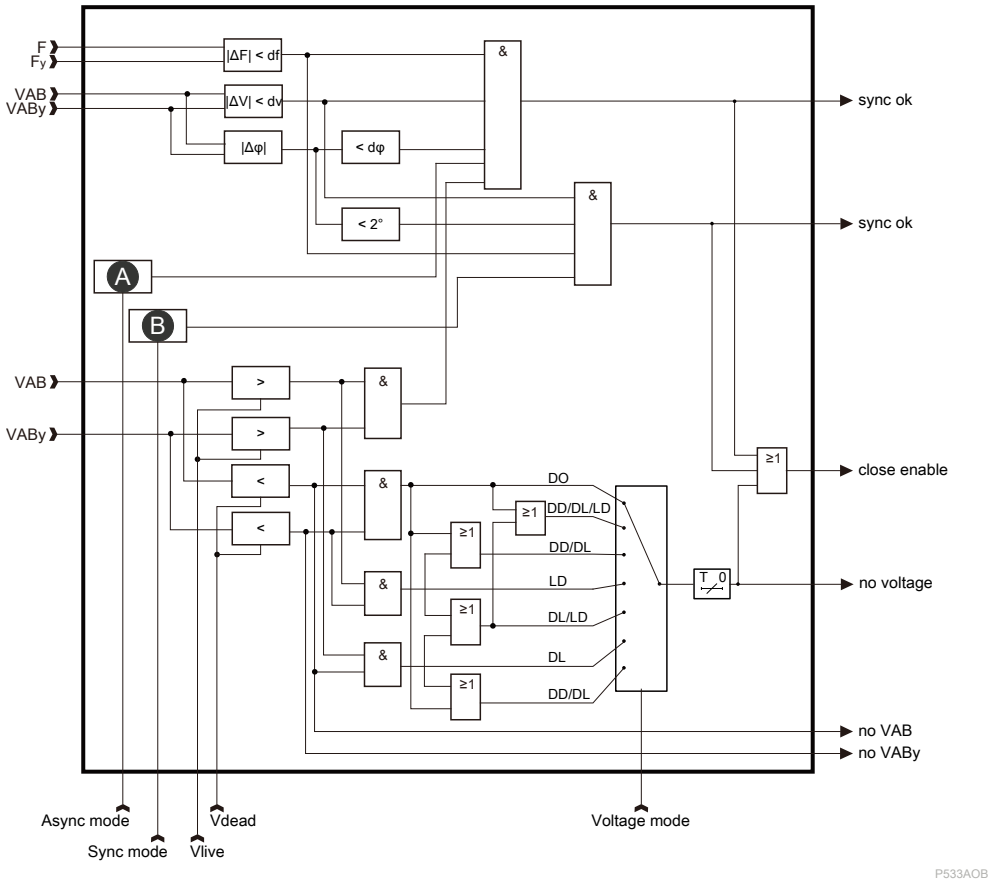

A	Async	B	Sync

Characteristics

Table 61 - Setting and characteristics of the synchro-check function (ANSI 25)

Settings/characteristics (description/label)	Values
Synchronisation mode/Synchro mode	
Options	Off; Async; Sync
Voltage check mode/Voltage mode	
Options	DD; DL; LD; DD/DL; DD/LD; DL/LD; DD/DL/LD
CB close time/CB close time	
Setting range	0.04...0.60 s
Resolution	0.01 s
Vdead limit setting/Vdead	
Setting range	0.01...1.20 pu[65]
Resolution	0.01 pu[65]

65. VT Primary nominal

Table 61 - Setting and characteristics of the synchro-check function (ANSI 25) (Continued)

Settings/characteristics (description/label)	Values
Accuracy	±0.03 pu[66] or 3% of the setting
Vlive limit setting/Vlive	
Setting range	0.10...1.30 pu[66]
Resolution	0.01 pu[66]
Accuracy	0.03 pu[66]
Frequency difference/Frequency diff	
Setting range	0.01...1.00 Hz
Resolution	0.01 Hz
Accuracy	±20 mHz
Hysteresis	< 10 mHz
Voltage difference/Voltage diff	
Setting range	0.01...0.60 pu[67]
Resolution	0.01 pu[67]
Accuracy	±0.03 pu[67]
Reset ratio	97% ± 2%
Phase angle difference/Angle diff	
Setting range	2°...90°
Resolution	1°
Accuracy	±2° when Δf < 0.2 Hz; else ±5°
Request timeout/Request time	
Setting range	0.1...600.0 s
Resolution	0.1 s
Accuracy	±1% or ±20 ms
Stage operation range	
Frequency range	46...64 Hz
Setting groups/SetGrp	
Number	4

66. VT Primary nominal
67. Vnom

Undervoltage (ANSI 27)

Description

The Undervoltage protection function (ANSI code 27) is used to detect voltage dips or sense abnormally low voltages to trip or trig load shedding or load transfer. The function provides the selection of three phase to phase voltages or three phase to ground voltages for comparison with the voltage threshold. Each phase can start or trip independently. If the fault situation remains on longer than the operate time setting, a trip signal is issued.

This function operates with either the definite time delay or inverse time delay or programmable curves. These 3 options could be set in Operating curve parameter by eSetup Easergy Pro. The inverse time delay characteristic follows the equation below:

$$t(G) = \frac{T}{1-(\frac{G}{G_S})}$$

P533ORB

where:

- t(G) is the theoretical operate time in seconds with constant value of G.
- T is the time delay setting (theoretical operate time for G = 0).
- G is the measured value of the characteristic quantity.
- G_S is the setting value.

The [voltage, time] curve points are programmed using eSetup Easergy Pro. There are some rules for defining the curve points:

- the configuration must begin from the top line
- the line order must be as follows: the smallest voltage (shortest operate time) on the top and the largest voltage (longest operate time) on the bottom
- all unused lines (on the bottom) should be filled with G/G_S= 1.00 and operate time = 0.00 s

Here is an example configuration of curve points:

Table 62 - Example configuration of curve points

Point	Voltage (pu)	Operate delay(s)
1	0.10	0.00 s
2	0.10	0.10 s
3	0.70	0.10 s
4	0.70	0.50 s
5	0.90	1.00 s
6	1.00	0.00 s
7	1.00	0.00 s
8	1.00	0.00 s
9	1.00	0.00 s
10	1.00	0.00 s
11	1.00	0.00 s
12	1.00	0.00 s
13	1.00	0.00 s
14	1.00	0.00 s
15	1.00	0.00 s
16	1.00	0.00 s

Reset delay

The V< stage has a settable reset delay that enables the detection of intermittent faults. This means that the time counter of the protection function does not reset immediately after the fault is cleared, but resets after the release delay has elapsed. If the fault appears again before the release delay time has elapsed, the delay counter continues from the previous value. This means that the function eventually trips if faults are occurring often enough.

Blocking during voltage transformer fuse failure

At all the protection stages, the undervoltage function can be blocked with any internal or external signal using the block matrix. The blocking signal can also be a signal from the custom logic (refer to Logic functions, page 542).

The VTS fast alarm output can be used to block undervoltage protection function as internal signals. Refer to Voltage transformer supervision (ANSI 60), page 608.

This function can also be blocked when circuit breaker is opened and the setting “CB open blocking” is ON.

Operate mode

The setting "Tripping logic" is available to configure the operate mode. When "Tripping logic" is "Any phase", the general trip signal "V< trip" is raised when any phase operates. When "Tripping logic" is "Three phases", the signal "V< trip" is raised only when all three phases operate.

Three independent stages

There are three separately adjustable stages: V<1, V<2 and V<3. All these stages have the same settings and performance.

Block diagram

Figure 213 - Block diagram of the Undervoltage protection function (ANSI 27)

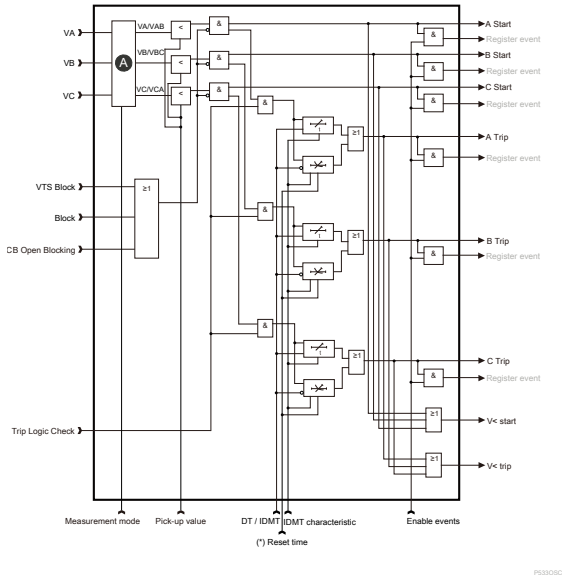

A	Select setting

Figure 214 - Block diagram of the Tripping Logic

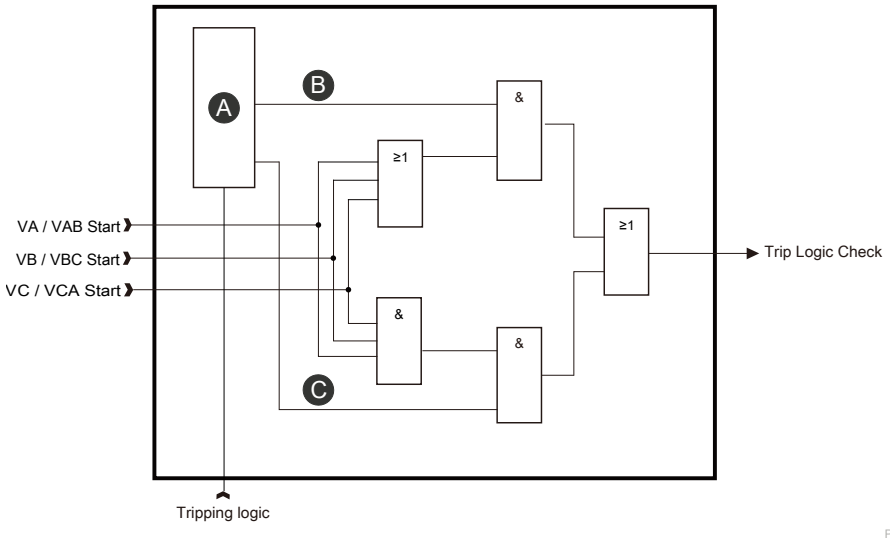

A	Select setting	B	“Any ph”
C	“Three ph”		

Once Trip logic check passed, which means general trip happens, the general trip resets only if all three phase are reset, no matter which trip logic is selected.

Characteristics

Table 63 - Settings and characteristics of the Undervoltage protection (ANSI 27)

Settings/characteristics (description/label)	Values
Enable V</V<	
Options	Off/On
Pick-up value/Pick-up value	
Setting range	0.020...1.200 pu[68]
Resolution	0.001 pu[68]
Accuracy	±2% or ±0.0005 pu[68]
CB open blocking/CB open blocking	
Options	Off/On
Measurement mode/Meas mode	
Options	Phase-phase; Phase-ground
Operating curve/Operating curve	
Options	DT; IDMT; Prg1-3
Tripping logic/Tripping logic	
Options	Any phase; Three phases
Operate delay/Operate delay	
Setting range	0.00...600.00 s
Resolution	0.01 s
Accuracy	DT: ±1% or ±10 ms
	IDMT: ±5% or ±20 ms
Reset delay/Reset delay	
Setting range	0.00...100.00 s
Resolution	0.01 s
Accuracy	±5% or ±30 ms
Hysteresis/Hysteresis	
Setting range	1.0%...5.0%
Resolution	1.0%
Accuracy	±2%
Characteristic times	
Start time	< 40 ms (35 ms with high speed)
Disengaging time	< 60 ms (75 ms with high speed)
Overshoot time	< 30 ms
Setting group/SetGrp	
Number	4

68. Vnom = VT primary nominal (PP) or Vnom/√3 = VT primary nominal (PN) depending on measurement mode parameter setting.

Positive sequence undervoltage (ANSI 27P)

Description

This is a protection function (ANSI code 27P) for motors against faulty operations due to insufficient or unbalanced power system voltage. There are special self-blocking features for starting up and shutting down a motor.

This undervoltage protection function calculates the positive sequence of the fundamental frequency component V1.

By using the positive sequence, all three phases are supervised, with one value, and if the motor looses the connection to the network (loss of mains), the undervoltage situation is detected even if the frequency decreases significantly from nominal frequency.

Whenever the positive sequence voltage V1 drops below the start setting of a particular stage, this stage activates and a start signal is issued. If the fault situation remains on longer than the time defined in the operate time setting, a trip signal is issued.

Blocking during VT fuse failure

Like all the protection stages, the positive sequence undervoltage function can be blocked with any internal or external signal using the block matrix, for example, if the secondary voltage of one of the measuring transformers disappears because of a fuse failure. The blocking signal can also be a signal from the user's logic.

Self-blocking at low voltage

The protection is blocked when the biggest of the three phase to phase voltages is below the low voltage block limit setting (refer to Positive sequence undervoltage state and block limit, page 315).

Block according to circuit breaker position

The positive sequence undervoltage protection is blocked when the circuit breaker is open or in undefined status.

Two independent stages

There are two separately adjustable stages: V1<1 and V1<2. Both stages can be configured for definite time (DT) operate characteristic.

Figure 215 - Positive sequence undervoltage state and block limit

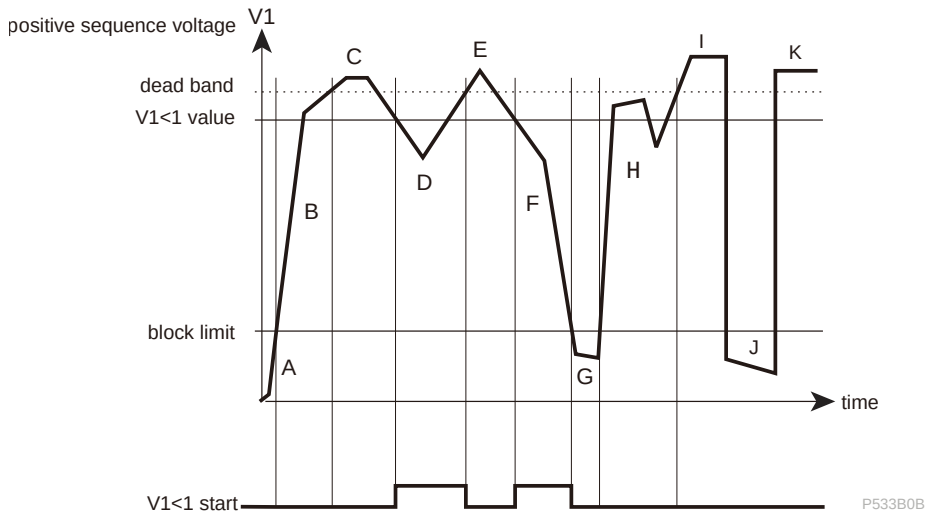

A	The maximum phase to phase voltage is below the block limit. This is not regarded as an undervoltage situation.	G	The maximum phase to phase voltage is below the block limit and this is not regarded as an undervoltage situation.
B	The maximum phase to phase voltage is above the block limit but below the start level. However, this is not regarded as an undervoltage situation because the voltage has never been above the start level since being below the block limit.	H	Same as B.
C	The voltage is OK because it is above the pick-up value.	I	The voltage is OK.
D	This is an undervoltage situation.	J	Same as G.
E	The voltage is OK.	K	The voltage is OK.
F	This is an undervoltage situation.		

Block diagram

Figure 216 - Block diagram for the positive sequence undervoltage protection

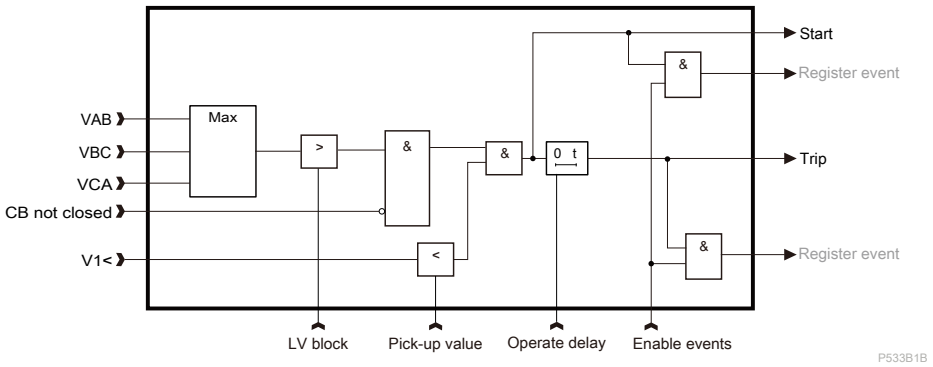

Characteristic

Table 64 - Settings and characteristics of the positive sequence undervoltage protection stages V1<1 and V1<2

Settings/characteristics (description/label)	Value
Pick-up value/Pick-up value	
Setting range	0.20...1.20 pu[69]
Resolution	0.01 pu[69]
Accuracy	±1%
Reset ratio	105%
Operate delay/Operate delay	
Setting range	0.00...300.00 s
Resolution	0.01 s
Accuracy	±1% or ±30 ms
Under voltage blocking/LV block[70]	
Setting range	0.02...1.00 pu[69]
Reset value	1.05 pick-up value
Resolution	0.01 pu[69]
Accuracy	±2%
Characteristic times	
Start time	< 70 ms (65 ms with high speed)
Disengaging time	< 85 ms (100 ms with high speed)
Overshoot time	< 50 ms
Setting group/SetGrp	
Number	4

69. Vnom/√3
70. Common settings for setting group 1, 2, 3, 4.

Directional power (ANSI 32)

Description

Directional power protection function (ANSI code 32) can be used, for example, to disconnect a motor in case the supply voltage is lost and thus help prevent power generation by the motor. It can also be used to detect loss of load of a motor.

Directional power protection function is sensitive to active power. If the fault situation stays on longer than the delay setting, a trip signal is issued.

Figure 217 - Example of loss of load

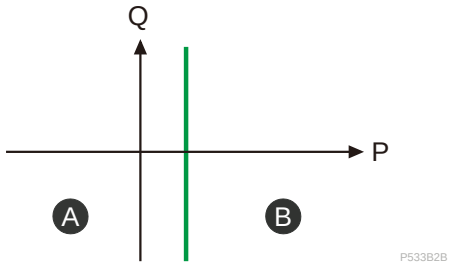

Figure 218 - Example of a motor working as a generator

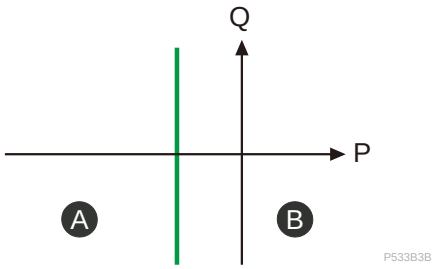

A	Reverse zone	B	Forward zone

The start setting range is from -200% to +200% of the nominal apparent power S_n. The nominal apparent power is determined by the configured voltage and current transformer values according to equation below.

$$S_n = \sqrt{3}\, V_{nom} \times I_{nom}$$ P533B4B

There are two identical stages available with independent setting parameters. Each stage is deactivated if the maximum line voltage drops below 5% of the nominal voltage value.

Block diagram

Figure 219 - Block diagram of the directional power protection

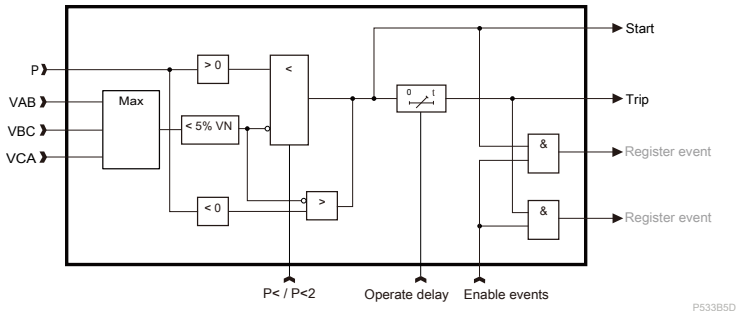

Characteristics

Table 65 - Settings and characteristics of the directional power protection

Settings/characteristics (description/label)	Value
Pick-up value/Pick-up value	
Setting range	-200.0%...+200.0% Sn[71]
Resolution	0.5%
Accuracy	±3% or ±0.5% Sn
Reset ratio	105% ± 3% if P > 0; 95% ± 3% if P < 0
Minimum hysteresis	2.5 W secondary
Operate delay/Operate delay	
Setting range	0.00...300.00 s
Resolution	0.1 s
Accuracy	±1% or ± 150 ms
Characteristic times	
Start time	< 250 ms
Disengaging time	< 500 ms
Setting group/SetGrp	
Number	4

71. Snom = √3 x Vnom x Inom

Wattmetric earth/ground fault (32N)

Description

The wattmetric earth/ground fault protection function (ANSI code 32N) is a directional earth/ground fault protection adapted for compensated neutral power systems (namely Petersen-coil earthed/grounded) in which the resistive part of the earth/ground fault current is large enough (typically greater than 5 A).

The settings of the wattmetric earth/ground fault protection are based on the fundamental component of the neutral current and of the neutral voltage. The protection operates with a detection of restriking faults.

The protection calculates the active and reactive neutral powers as follows:

$PN = IN \times VN \times \cos\varphi_N$

$QN = IN \times VN \times \sin\varphi_N$

where

$$IN = \vec{I}_A + \vec{I}_B + \vec{I}_C$$ P533B6B

$$VN = \vec{V}_A + \vec{V}_B + \vec{V}_C$$ P533B7B

The Pick-up value setting of neutral power setting in percentage of PN.

NOTE: Connect the VN signal according to the connection diagram to achieve correct polarisation.

The wattmetric earth/ground fault protection provides 2 operating zones, separated by a non-detection zone:

- Forward fault zone

  The forward zone is intended to issue a signal or trip command during a fault at the downstream side of the protection.

- Backward fault zone

  The backward zone is intended to issue a signal during a fault at the upstream side of the protection.

The two zone area are defined by a pickup sector setting.

If the direction mode is set to Reverse, the wattmetric earth/ground fault protection operates in upstream fault zone.

Figure 220 - Operating zones of the wattmetric earth/ground fault protection

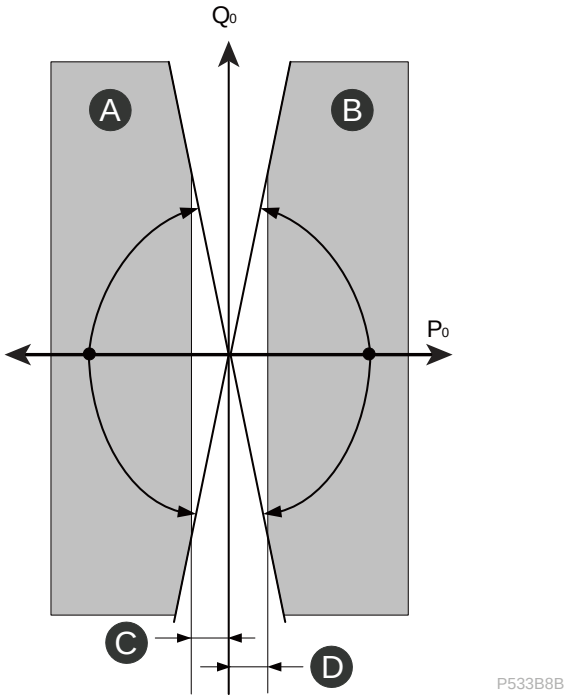

A	Forward zone	B	Reverse zone
C	Pick-up value	D	Pick-up value

The protection is deactivated if the neutral voltage is lower than VN pick-up value setting.

Table 66 - The primary values corresponding to different pick-up values

		Pn_0.prim = I_n.prim x U_n.prim x √3			Stage: Sw> = I_r x V_r x cosϕ				
CT	VT	In HTA	Un HTA	Pn_0 HT KW	8 KW	20 kW	40 kW	80 kW	120 KW
50/1	20000/100	50	20000	1732	0.46%	1.15%	2.31%	4.62%	6.93%
100/1	20000/100	100	20000	3464	0.23%	0.58%	1.15%	2.31%	3.46%
200/1	20000/100	200	20000	6928	0.12%	0.29%	0.58%	1.15%	1.73%
300/1	20000/100	300	20000	10392	0.08%	0.19%	0.38%	0.77%	1.15%
400/1	20000/100	400	20000	13856	0.06%	0.14%	0.29%	0.58%	0.87%
600/1	20000/100	600	20000	20785	0.04%	0.10%	0.19%	0.38%	0.58%
50/5	20000/100	50	20000	1732	0.46%	1.15%	2.31%	4.62%	6.93%
100/5	20000/100	100	20000	3464	0.23%	0.58%	1.15%	2.31%	3.46%
200/5	20000/100	200	20000	6928	0.12%	0.29%	0.58%	1.15%	1.73%
300/5	20000/100	300	20000	10392	0.08%	0.19%	0.38%	0.77%	1.15%
400/5	20000/100	400	20000	13856	0.06%	0.14%	0.29%	0.58%	0.87%
600/5	20000/100	600	20000	20785	0.04%	0.10%	0.19%	0.38%	0.58%

Four memory modes

The detection of current faults is controlled by a memory hold time that extends the transient pick-up information enabling the operation of the definite time delay even if the faults are rapidly extinguished (< 1.5 ms) and restrike rapidly and periodically.

The wattmetric protection can be used in different modes:

- Fault memory based on voltage

  The detection of current faults is controlled by the presence of neutral voltage that extends the transient pick-up information enabling the operation of the definite time delay even if the faults are rapidly extinguished and restrike rapidly and periodically. The level of the neutral voltage is settable.

- Fault memory based on the time memory

  The detection of current faults is controlled by a memory hold time that extends the transient pick-up information enabling the operation of the definite time delay even if the faults are rapidly extinguished and restrike rapidly and periodically. The memory time is settable (Memory time).

- Both criteria

  The protection operates with both, memory time and memory neutral voltage.

- Without memory criteria

  When the fault is detected, the start signal is raised after confirmation. Neither memory time nor neutral voltage memory is taken into account.

Operation

With a Petersen coil system, the current in a faulty feeder is usually inductive and in a healthy feeder, capacitive.

For the forward output, a confirmation is applied on the start signal, because the wattmetric is based on active power and when a restriking fault occurs with a Petersen coil system, the following phenomenon needs to be considered:

For the backward output, the wattmetric protection is able to detect the capacitive current circulation in healthy feeders, to see that the fault is on upstream side:

- In steady state, this capacitive current has a phase-shift of 90° with the neutral voltage. So this capacitive current is not detected because it is outside the backward characteristic, symmetrical to forward area.
- During the transient, the capacitive current goes first in the backward area, before to go outside with at the end a phase-shift of 90°. This transient signal is not used to detect a backward fault with capacitive current, but mainly to block other protection functions of healthy feeders. This can be the case when a HV/MV transformer supplies two incomers at the same time (see Faulty feeder vs. healthy feeder, page 322).

Figure 221 - Faulty feeder vs. healthy feeder

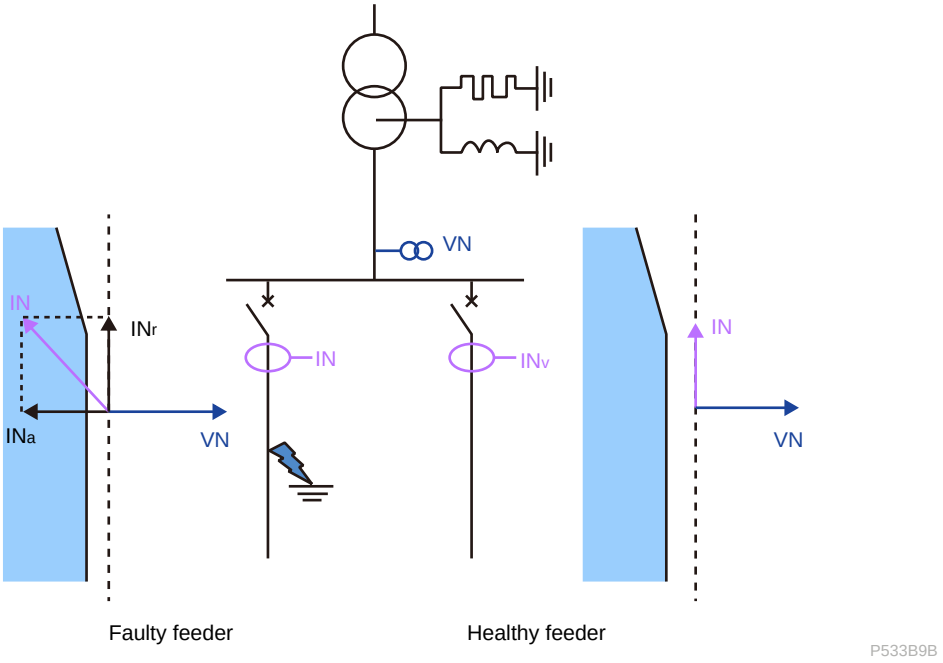

Tripping direction

The normal operate area, in PowerLogic P5 protection relay could be set to forward or reverse area, because sometimes it is not possible to modify CT or VT connections when there is a mistake in the wirings. In that case, to avoid a modification of wirings, you can set the operate area to forward (default setting) or reverse. So if you change the operate area, the confirmation must be applied to the operate area (which could be forward or reverse).

Block diagram

Figure 222 - Block diagram of the wattmetric earth/ground fault protection function (ANSI 32N)

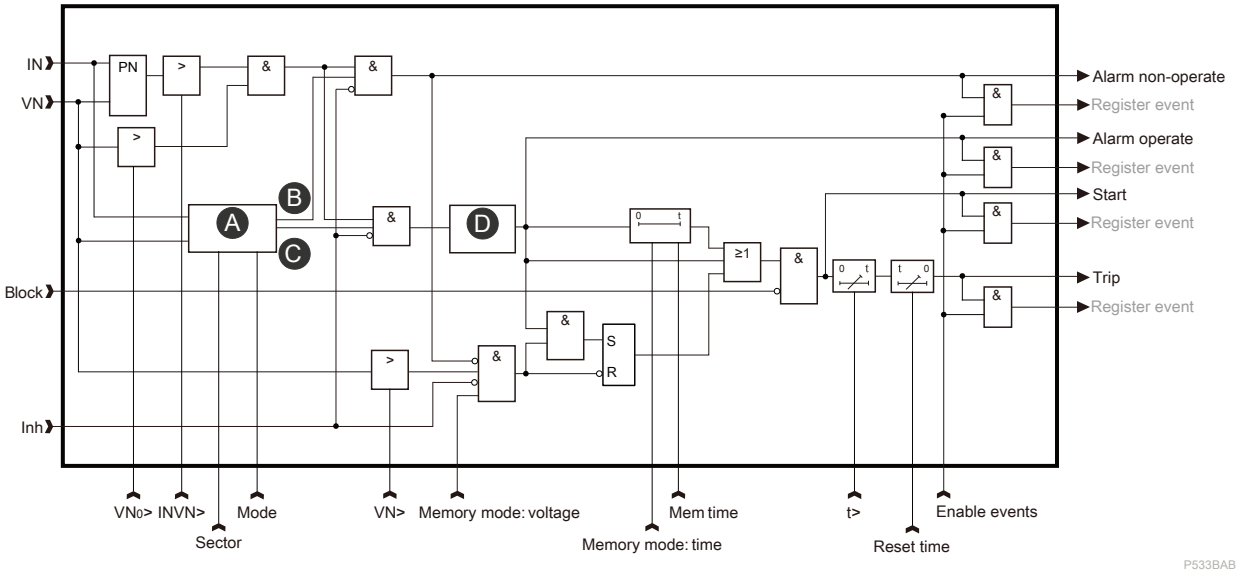

A	-Sector < φ0 < +Sector 180 - Sector < φ0 < 180 + Sector	B	Backward
C	Forward	D	Confirmation

Characteristics

Table 67 - Settings and characteristics of the wattmetric earth/ground fault protection

Settings/characteristics (description/label)	Value
IN input/IN input	
Options	IN.meas, IN.calc, IN.sens for model with EF CT (1/5A CT, 1A CT and CSH30) IN.calc, IN.CSH for model with CSH
Direction mode/Direction mode	
Options	Forward; Reverse
Inhibit control/Inhibit control	
Options	Selection of one digital input (DI) or one virtual input (VI)
Timer instant delay ctrl./Timer Inst control	
Options	Selection of one digital input (DI) or one virtual input (VI)
Pick-up value/Pick-up value	
Setting range	0.001...0.2 Pn_0[72] if IN calculated or measured with standard EF CT (1A/5A CT or CSH30) 0.001...2 Pn_0[72] if IN measured with sensitive EF CT 0.1...20 Pn_0[72] if IN measured with CSH 2A 0.01...2 Pn_0[72] if IN measured with CSH 20A
Resolution	0.1%

72. PN.nom = IN x VN x cosφN

Table 67 - Settings and characteristics of the wattmetric earth/ground fault protection (Continued)

Settings/characteristics (description/label)	Value
Accuracy	±10%
Reset ratio	90% ± 3%
VN pick-up value/VN>	
Setting range	0.020...0.800 pu[73]
Resolution	0.001 pu[73]
Accuracy	±0.050 pu[73]
Reset ratio	95% ± 3%
Pick-up sector size/Sector	
Setting range	0°...90°
Resolution	1°
Accuracy	±1° with IN and VN measured ±3° with IN and VN calculated
Hysteresis	1° with IN measured 3° with IN calculated
Operate delay/Operate delay	
Setting range	0.00...300.00 s
Resolution	0.01 s
Accuracy	±1% or ±20 ms
SOL status/SOL status	
Options	Off, SOL1, SOL2
SOL operate delay/SOL operate delay	
Setting range	0.00...300.00 s
Resolution	0.01 s
Accuracy	±1% or ±20 ms
Memory mode/Memory mode	
Options	None; Voltage; Time; Both
Memory time/Memory time	
Setting range	0.05...10.00 s
Resolution	0.01 s
Accuracy	±1% or ±20 ms
Reset delay/Reset delay	
Setting range	0.00...100.00 s
Resolution	0.01 s
Accuracy	±1% or ±20 ms
Characteristic times	
Start time	< 50 ms (45 ms with high speed) for power at 2 IN pick-up value × VN pick-up value < 55 ms (50 ms with high speed) for power at 1.2 IN pick-up value × VN pick-up value < 60 ms (55 ms with high speed) for power at 1.05 IN pick-up value × VN pick-up value
Overshoot time	< 40 ms for power at 2 IN pick-up value × VN pick-up value

73. Vnom = VT primary nominal (PP)

Table 67 - Settings and characteristics of the wattmetric earth/ground fault protection (Continued)

Settings/characteristics (description/label)	Value
Disengaging time	< 60 ms (75 ms with high speed)
Setting group/SetGrp	
Number	4

Phase undercurrent (ANSI 37)

Description

The phase undercurrent protection (ANSI code 37) measures fundamental component of phase currents. By detecting motor loss of load, it's typically used to protect pumps against loss of prime. This protection protects rather the devices driven by motor than the motor itself, for example a submersible pump (where the flowing liquid inherently cools the pump) or conveyor belt.

Phase undercurrent protection can be configured for definite time characteristic only.

To differentiate normal operation of circuit breaker and undercurrent conditions, a low current setting is available to block this protection function.

Low-current self-blocking

The value of low-current self-blocking could be different in each setting groups. To avoid unwanted tripping, phase undercurrent protection shall be blocked when maximum of phase currents drops under the setting.

Phase undercurrent protection will automatically become inactivated if its pickup threshold is set equal to or lower than this undercurrent blocking limit.

Block diagram

Figure 223 - Block diagram of the phase undercurrent protection function (ANSI 37)

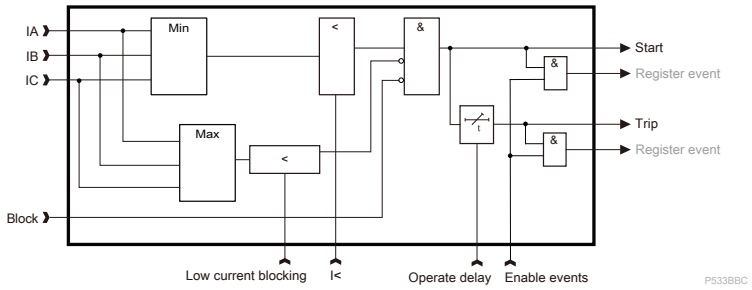

Characteristics

Table 68 - Settings and characteristics of the phase undercurrent protection function (ANSI 37)

Settings/characteristics (description/label)	Value
Pick-up value/Pick-up value	
Setting range	0.05...1.00 pu[74]
Resolution	0.01 pu[74]
Accuracy	±2% or ±0.005 Inom
Reset ratio	105% ± 2%
I< block limit/I< block limit	
Value	0.02...0.50 pu[74]
Operate delay/Operate delay	
Setting range	0.0...300.0 s
Resolution	0.1 s
Accuracy	±1% or ±20 ms
Characteristic times	
Start time	< 60 ms (55 ms with high speed)
Disengaging time	< 65 ms (80 ms with high speed)
Setting group/SetGrp	
Number	4

74. Inom

Temperature monitoring (ANSI 38)

Description

The temperature monitoring function (ANSI code 38) is used to detect abnormal heat rise by measuring the temperature inside equipment fitted with sensors:

- transformer: protection of primary and secondary windings
- motor and generator: protection of stator windings and bearings. This protection function is associated with an RTD of the Pt100 platinum (100 Ω at 0°C or 32°F) or nickel (Ni100 or Ni120) type, in accordance with the IEC 60751 and DIN 43760 standards.
- it picks up when the monitored temperature is greater than the set point (Ts)
- it has two independent set points:
  - alarm set point
  - tripping set point, the trip signal of temperature monitoring is not a part of the global trip.
- when the protection function is activated, it detects whether the RTD is shorted or disconnected:
  - RTD shorting is detected if the measured temperature is less than -30°C or -22°F (measurement displayed as "——")
  - RTD disconnection is detected if the measured temperature is greater than +200°C or +392°F (measurement displayed as "–//–").

  If an RTD fault is detected, the associated threshold is inhibited and the start and trip signals are forced to reset state.

  The "RTD fault" item is also made available in the control matrix and an alarm message is generated specifying the number of the MET148-2 module for the faulty RTD.

Block diagram

Figure 224 - Block diagram of the temperature monitoring function (ANSI 38)

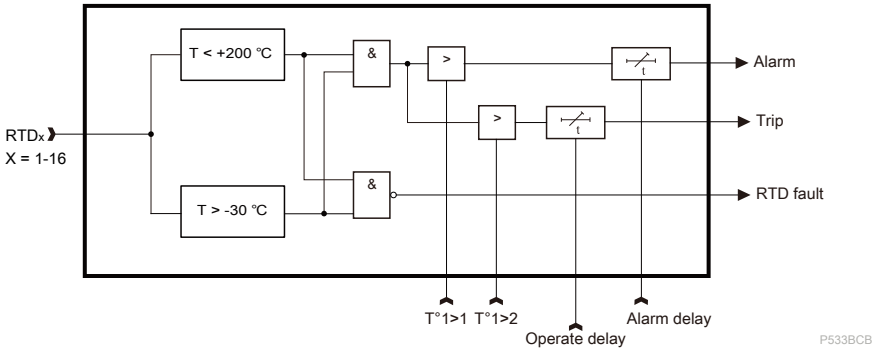

Characteristics

Table 69 - Setting and characteristics of the temperature monitoring function (ANSI 38)

Settings/characteristics (description/label)	Value
Alarm and trip set points/T°1>1, T°1>2	
Setting range	0°C...180°C (32°F...356°F)
Unit	°C
Accuracy	±1°C (±1.8°F)
Resolution	1°C (1.8°F)
Pick up/drop out	3°C (37.4°F)
Alarm delay/AlmDly	
Setting range	0.00...600.00 s
Accuracy	1% ± 20 ms
Operate delay/OperDly	
Setting range	0.00...600.00 s
Accuracy	1% ± 20 ms
Characteristic times	
Start time	< 3 s
Setting group/SetGrp	
Number	1

Negative sequence overcurrent (ANSI 46)

Description

The negative sequence overcurrent protection function (ANSI code 46) gives greater sensitivity to detect phase to phase faults at the end of long lines, where phase overcurrent elements may not operate.

For rotating machines, the negative sequence overcurrent protection provides protection against a temperature rise caused by an unbalanced power supply, phase inversion, loss of phase, and unbalanced phase current.

The negative sequence current is calculated from the measured phase currents according to the following formula (for standard phase rotation A - B - C):

$$\vec{I_2} = \frac{1}{3}\left(\vec{I_A} + a^2\vec{I_B} + a\vec{I_C}\right)$$

P533BDB

with

$$a = e^{j\frac{2\pi}{3}}$$

P533BEB

The negative sequence overcurrent protection function operates with inverse or definite tripping time characteristic.

There are two separately adjustable stages available in PowerLogic P5, both providing the same settings and performance.

With transformer differential protection P5T30 each stage can be individually linked to the measured phase currents of one end.

If phase swapping feature is used, then this is considered in the calculation of the negative sequence current.

Back-up mode

The back-up mode is for PowerLogic P5L30 only.

The negative sequence overcurrent protection, the non-directional/directional phase overcurrent protection and the non-directional/directional earth/ground fault overcurrent protection can be set as backup protections of the line differential protection in case the line differential protection is permanently blocked. By default, the overcurrent stages are active. Once the back-up mode is enabled, the overcurrent protections will be active only if the line differential protection is blocked, and when the line differential protection is not blocked or disabled, the overcurrent protections will be inactive again.

To enable/disable the back-up mode, check/uncheck the **Back-up mode** in eSetup Easergy Pro/ **PROTECTION**/**Negative sequence overcurrent 46** and **Phase overcurrent 50/51/67** and **Ground fault overcurrent 50N/51N/67N**.

Block diagram

Figure 225 - Block diagram of the negative sequence overcurrent protection function (ANSI 46)

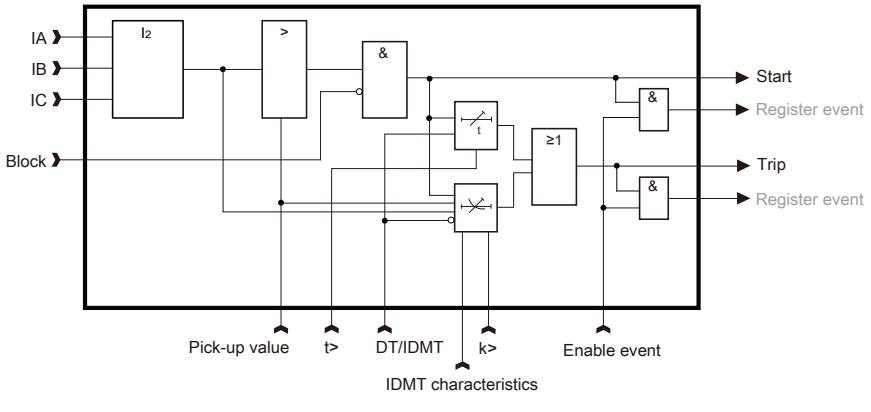

Characteristics

Table 70 - Settings and characteristics of the negative sequence overcurrent protection

Settings/characteristics (description/label)	Value
Pick-up value/Pick-up value	
Setting range	0.02...5.00 pu[75]
Resolution	0.01 pu[75]
Accuracy	±3% or ±0.005 pu[75]
Reset ratio	95% ± 2%
CT input selection[76]	
Setting range	CT-1, CT-2
Operate delay/Operate delay	
Setting range	0.00...300.00 s
Accuracy	±1% or ±20 ms
Operating curve/Operating curve	
Option	DT; IEC: SI, VI, EI, LTI, UTI; IEEE: MI, VI, EI ANSI: NI, STI, LTI Others: UK_Rectifier, FR_STI, RI, STI_CO2, LTI_CO5, MI_CO7, NI_CO8, VI_CO9, EI_CO11, BPN Prg1-3
Accuracy	±5% or ±30 ms (for IDMT)
TMS/TMS	
Setting range	0.020...20.000
Resolution	0.001
DT adder/DT adder	
Setting range	0.00...1.00 s
Resolution	0.01 s
Minimum operate delay/Min operate delay	
Setting range	0.00...10.00 s
Resolution	0.01 s
Reset curve/Reset curve	
Options	DT; IDMT; Prg1-3
Reset delay/Reset delay	
Setting range	0.03...100.00 s
Resolution	0.01 s
Accuracy	±1% or ±20 ms
Back-up mode	
Enable back-up mode	Off/On
Characteristic times	
Start time	< 50 ms (45 ms with high speed) for currents at 2 x Pick-up value < 55 ms (50 ms with high speed) for P5T30, for currents at 2 x Pick-up value

75. I_{nom}
76. Available for P5T30 only.

Table 70 - Settings and characteristics of the negative sequence overcurrent protection (Continued)

Settings/characteristics (description/label)	Value
	< 60 ms (55 ms with high speed) for currents at 1.2 x Pick-up value < 65 ms (60 ms with high speed) for currents at 1.05 x Pick-up value
Disengaging time	< 75 ms (90 ms with high speed)
Setting group/SetGrp	
Number	4

Unbalance overcurrent, broken conductor (ANSI 46BC)

Description

The purpose of the unbalance overcurrent, broken conductor protection function (ANSI code 46BC) is to detect unbalanced load conditions, for example a broken conductor of a loaded overhead line in a medium voltage radial network.

Different fault conditions may apply:

- Broken conductor in contact with the earth/ground at the source side
- Broken conductor in contact with the earth/ground at the load side
- Open circuit (conductor not in contact with the earth/ground) caused by broken conductor, blown fuse, circuit breaker pole failure, etc.

This function can also be used for motor protection in order to detect blown fuse or phase reverse connection.

The PowerLogic P5 provides two stages of unbalance overcurrent, broken conductor protection. Each stage can be enabled or disabled independently.

The function is inactive if only 2 phase current sensors are connected (2 CT mode with setting **Number of connected phase CT** = *A/C* in the **GENERAL** menu/ **Scaling** sub-menu).

The operation of the unbalanced load function is based on the negative phase sequence component I_2 related to the positive phase sequence component I_1. These are calculated from the phase currents using the method of symmetrical components. The function requires that the measuring inputs are connected correctly. The unbalance protection has definite time operation characteristic.

The positive and negative sequence currents I_1 and I_2 are defined as follows (for standard phase rotation A - B - C):

$$\vec{I_1} = \frac{1}{3}(\vec{I_A} + a\vec{I_B} + a^2\vec{I_C})$$

P533BGB

$$\vec{I_2} = \frac{1}{3}(\vec{I_A} + a^2\vec{I_B} + a\vec{I_C})$$

P533BHB

with phasor rotating constant:

$$a = e^{j\frac{2\pi}{3}}$$

P533BEB

NOTE: The broken conductor function is inhibited if the positive sequence current I_1 is less than 5% of the nominal current.

With transformer differential protection P5T30 each stage can be individually linked to the measured phase currents of one end.

If phase swapping feature is used, then this is considered in the calculation of the sequence currents.

Block diagram

Figure 226 - Block diagram of the unbalance overcurrent broken conductor protection function (ANSI 46BC)

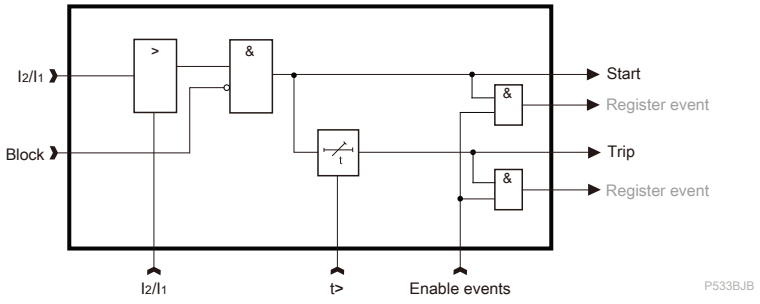

Characteristics

Table 71 - Settings and characteristics of the unbalance overcurrent broken conductor protection

Settings/characteristics	Value
Pick-up value/Pick-up value	
Setting range	2%...70%
Resolution	1%
Accuracy	±3%
CT input selection[77]	
Setting range	CT-1, CT-2
Reset ratio	
Value	95%
Accuracy	±2% or ±2 mA secondary
Operate delay/Operate delay	
Setting range	0.00...300.0 s
Resolution	0.01 s
Accuracy	±1% or ±20 ms
Characteristic times	
Start time	< 50 ms (45 ms with high speed) for currents at 2 x Pick-up value < 60 ms (55 ms with high speed) for currents at 1.2 x Pick-up value < 75 ms (70 ms with high speed), for currents at 1.05 x Pick-up value < 105 ms (100 ms with high speed) for P5T30, for currents at 1.05 x Pick-up value
Disengaging time	< 75 ms (90 ms with high speed)
Setting group/SetGrp	
Number	4

77. Available for P5T30 only.

Negative sequence overvoltage (ANSI 47)

Description

To protect a rotating machine from being energised with a reverse voltage sequence or to help prevent overheating of the motor due to a broken conductor condition, negative sequence overvoltage protection (ANSI code 47) can be applied. This protection monitors the voltage phase sequence detecting a reverse rotation or voltage unbalance due to a missing (asymmetrical) phase. The detection of these conditions can then be used to trip the machine and help prevent damage to both the motor and the mechanically coupled process.

The PowerLogic P5 protection relay provides two stages of negative sequence overvoltage protection. Each stage can be enabled or disabled independently. The negative sequence voltage is derived from the three phase voltages. If the VT connection is configured as “VPP/VPPy”, the negative sequence voltage cannot be derived, and the negative sequence overvoltage protection is disabled.

If the negative sequence voltage input exceeds the voltage setting, this function starts instantaneously, and it operates with the definite time delay or inverse time delay characteristic that has been selected. The inverse time delay characteristic follows the equation below:

$$t = \frac{T}{\frac{V}{G_S} - 1}$$

P533BKB

where:

t is the theoretical operate time in seconds.

T is the operate delay setting (theoretical operate time for $V = 2 \times G_S$).

V is the calculated value of negative sequence voltage.

G_S is the pick-up setting value of the negative sequence overvoltage protection.

The V stage has a settable reset delay that enables the detection of intermittent faults. This means that the time counter of the protection function does not reset immediately after the fault is cleared, but resets after the release delay has elapsed. If the fault appears again before the release delay time has elapsed, the delay counter continues from the previous value. This means that the function eventually trips if faults are occurring often enough. This function is blocked by VTS operation if the setting "VTS operating mode" is set to "Blocking".

Block diagram

Figure 227 - Block diagram of the negative sequence overvoltage protection (ANSI 47)

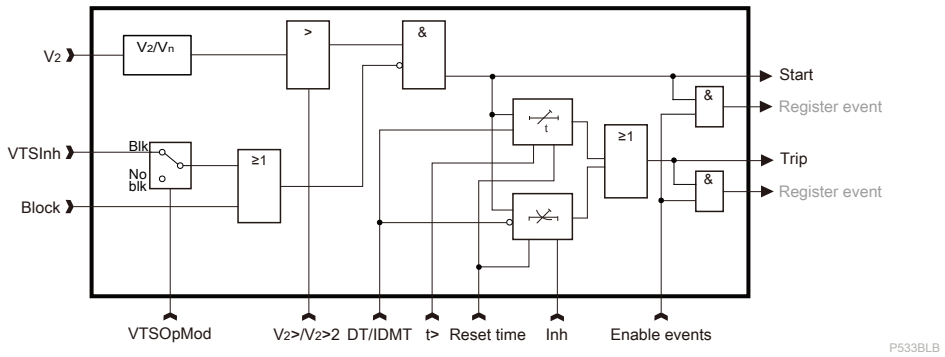

Characteristics

Table 72 - Settings and characteristics of the negative sequence overvoltage protection function

Settings/characteristics (description/label)	Values
VTS operating mode/VTS operating mode	
Options	No action; Blocking
Pick-up value/Pick-up value	
Setting range	0.01...1.00 pu[78]
Resolution	0.01 pu[78]
Accuracy	±2% or ±0.05 V secondary
Reset ratio	98% ± 1% fixed
Minimum hysteresis	120 mV secondary
Operating curve/Delay type	
Options	DT; IDMT(the characteristic follows the equation provided in Description, page 336)
Operate delay/Operate delay	
Setting range	0.00...300.00 s
Resolution	0.01 s
Accuracy	DT: ±2% or ±20 ms; IDMT: ±5% or ±20 ms
Reset delay/Reset delay	
Setting range	0.03...300 s
Resolution	0.01 s
Accuracy	±2% or ±20 ms
Characteristic times	
Start time	< 55 ms (50 ms with high speed) for voltage from 0.9 Pick-up value to 1.1 Pick-up value
Overshoot time	< 40 ms for voltage from 0.9 Pick-up value to 1.1 Pick-up value
Setting group/SetGrp	
Number	4

78. U_n = VT primary nominal

Thermal overload protection for feeder (ANSI 49F)

Description

The Thermal Overload protection function for Feeder (ANSI code 49F) can be applied to minimise damage to overhead lines and underground cables when operating at temperatures in excess of the designed maximum withstand (deterioration of the insulation, sagging conductors etc.).

The PowerLogic P5 protection relays that are designed for feeder protection incorporate a current based thermal replica, using phase current to reproduce the heating and cooling of the feeder conductors. In this case, the PowerLogic P5 protection relay automatically uses the highest phase current as input information for the thermal model. The current measurement is based on 3 phase RMS currents, that takes into account harmonic rank up to 15. The mathematical model used to compute the thermal level of the feeder conductors is based on the thermal model defined in the IEC 60255-149 standard.

The thermal replica can optionally take account of ambient temperature, preferably when an ambient temperature sensor is available. However, where an ambient temperature sensor is not available, the user may enter a default value for ambient temperature which is different to the value defined in the feeder conductors data sheet (e.g. to take account of summer and winter ambient temperature values).

The Thermal Overload for Feeder protection can be used in two different setting modes:

- Current based setting mode
- Temperature based setting mode

The following sections explain the two setting modes.

Also with transformer differential protection P5T30 one such thermal overload element is provided which can be linked to the measured phase currents of one end as per application requirements.

Current based setting mode

This setting mode is active when "Temperature based mode" is set to "Current". In this setting mode, the thermal level H(t) is computed according to the thermal model defined in the IEC 60255-149.

The thermal level H(t) is computed according to the following equation:

$$H(t) = H(t - \Delta t) + \left(\frac{I_{eq}(t)}{k \times I_b}\right)^2 \times \frac{\Delta t}{\tau} - H(t - \Delta t) \times \frac{\Delta t}{\tau}$$

P533BMB

where:

- H(t) is the thermal level computed at time t ("Thermal level").
- H(t - Δt) is the thermal level computed at time t - Δt.
- $I_{eq}(t)$ is the equivalent heating phase current at time t computed from the maximum of the 3 phase RMS currents.
- I_b is "Base current" or "Feeder basic current".
- k is the "k" factor applied to the basic current to define the maximum continuous current.
- τ is the time constant of the feeder ("Time constant" or "Time constant τ"), where τ is assumed to be much greater than Δt.

"$[I_{eq}(t) / (k \times I_b)]^2 \times \Delta t / \tau$" expresses the heat transfer due to the phase current $I_{eq}(t)$ and "$H(t - \Delta t) \times \Delta t / \tau$" expresses the natural cooling of the feeder conductors.

The thermal overload protection operates when the thermal level is greater than 100%. This thermal level of 100% can be reached with a permanent current above the basic current value I_b multiplied by the k factor.

With a continuous load current "I_{eq}", the thermal level "H" is equal to:

$$H(I_{eq}) = \left(\frac{I_{eq}}{k \times I_b}\right)^2$$

P533BNB

The table below indicates the thermal level with different values of continuous load current:

I_{eq} / (k x I_b) ratio	Thermal Level (%)
1	100% (operation)
0.9	81%
0.8	64%
0.7	49%
0.6	36%
0.5	25%
0.4	16%
0.3	9%

Generally, the base current $I_b$is set to the feeder thermal rated current, and overload factor k should be set to take into account the short-term overload capability. The default overload factor k is 1.15.

A thermal alarm ("49F alarm" output) is provided which operates when the thermal level is greater than or equal to the "Thermal alarm value" setting (expressed in %) and is usually set to be lower than 100%, the operate level. This threshold, expressed in %, is available only in the current based setting mode.

The thermal level in % is accessible as an output measurement.

When thermal overload is managed in the several setting groups, the thermal level is kept after the setting group change (no thermal level reset), and the thermal level is computed according to the new settings.

Temperature based setting mode

This setting mode is active when "Operating mode" setting is set to "Ambient". In this setting mode, the protected object temperature computation is based on the previous thermal level H(t) calculation (see previous section "Current based setting mode") with an additional reference to the maximum operating temperature of the feeder conductors, the maximum ambient temperature and the working temperature, defined by setting.

In this mode, the thermal level H(t) is computed with the following formula, derived from the equation of thermal level H(t) calculation:

$$H(t) = H(t - \Delta t) + F_a \times \left(\frac{I_{eq}(t)}{k \times I_b}\right)^2 \times \frac{\Delta t}{\tau} - H(t - \Delta t) \times \frac{\Delta t}{\tau}$$

P533BQB

Where common values are identical to the thermal level H(t) calculation formula, and the additional "F_a" ambient temperature factor is defined with the following equation:

$$F_a = \frac{T_{max} - T_{nom}}{T_{max} - T_a}$$

P533BRB

where:

- T_{max} is the maximum temperature of the equipment ("Max object temperature").

- T_{nom} is the limit of the ambient temperature designed for the feeder conductors to operate at rated loads without causing thermal degradation of insulation ("Nominal ambient temperature", typically equal to 40°C).
- T_a is the real time ambient temperature of the feeder conductors measured with the RTD number 8. When no temperature sensor is available or the sensor is faulty, or the temperature measurement exceed "Max object temperature" setting or lower than the "Min ambient temperature", the value of "Default ambient temperature" will be used for this temperature.

The ambient temperature of the feeder conductors is computed with the following formula:

$$T_{object} = H(t) \times (T_{max} - T_a) + T_a$$

P533BSB

Where H(t), T_{max} and T_a are defined according to the previous equations.

The thermal overload protection operates when the computed temperature "T_{object}" is above or equals the maximum temperature T_{max}.

A temperature alarm is provided ("49F T> alarm" output). This output operates when the temperature level is greater than or equal to the alarm temperature setting(expressed in °C).

The ambient temperature (T_a) and object temperature (T_{object}) are accessible as output measurements in °C (T_a = "Ambient temperature" output and T_{object} = "Object temperature" output). The default value of the ambient temperature is equal to the "Default ambient temperature" setting.

Additional features

The thermal level computation expressed in % is always available with the feeder thermal level output. The current thermal level is saved in a non volatile memory when the PowerLogic P5 protection relay is powered off. If the current thermal level is above 90%, a value of 90% is memorised to help prevent possible nuisance tripping on supply restoration.

A measurement output where the estimated time to trip is provided, based on the hypothesis that the load current present remains constant until thermal overload operation occurs.

A time remaining alarm ("49F rsv alarm" output) is provided. It operates when the calculated remaining time is less than or equal to the "Reserve time thermal alarm" setting.

There is a digital input (“Feeder thermal level reset” signal) to reset the thermal level value, when the digital input is asserted, the value of thermal level is set to Zero.

It is possible to block the protection function using the block matrix.

Typical values of time constant in minutes:

Applications	Time constant (min)
Dry-type transformers	40 (rating < 400 kVA) 60...90 (rating 400...800 kVA)
Air-core reactors	40
Capacitor banks	10
Overhead lines	10 (Cu: cross section greater than or equal to 100 mm² (0.15 in²); or Al: 150 mm² (0.23 in²))
Busbars	60

Time to trip calculation

For a continuous current higher than the current threshold (k x I_b), the operate time of the thermal overload protection can be computed with the following equation:

$$t = \tau \times L_n \times \left(\frac{F_a \times H(I_{eq}) - H_0}{F_a \times H(I_{eq}) - 100\%} \right)$$

P533BOB

where:

- τ is the time constant for the protected equipment.
- Ln( ) is natural logarithm function.
- F_a is the ongoing temperature compensation. In current based setting mode, F_a = 1.
- $H(I_{eq})$ is the thermal level calculated with the continuous load current (I_{eq}) and the base current setting (I_b).
- H_0 is the current thermal state corresponding to the last calculation.

In the same way, for a continuous current higher than the current threshold (k x I_b), the time for the alarm to operate is:

$$t = \tau \times L_n \times \left(\frac{F_a \times H(I_{eq}) - H_0}{F_a \times H(I_{eq}) - H_{alarm}} \right)$$

P533BTB

where:

H_{alarm} is "Alarm" (alarm temperature setting, in %). In temperature based setting mode, the alarm temperature setting is expressed in °C. The corresponding thermal level in % (H_{alarm}) is defined by the following equation:

$$H_{alarm} = \frac{T_{alm} - T_a}{T_{max} - T_a} \times 100\%$$

P533BUB

Block diagram

Figure 228 - Block diagram of the thermal overload protection function (ANSI 49F)

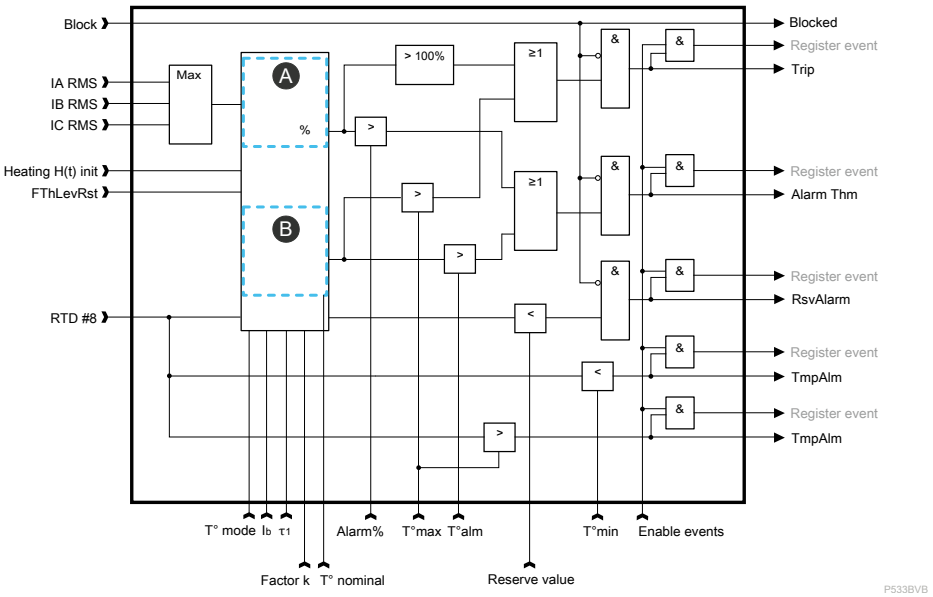

A	Current based mode calculation zone	B	Temperature based mode calculation

Characteristics

Table 73 - Settings and characteristics of the thermal overload protection stage 49F

Settings/characteristics (description/label)	Values
Base current setting/I_b	
Setting range	0.1...4.0 pu[79]
Resolution	0.01 pu[79]
CT input selection[80]	
Setting range	CT-1, CT-2
Overload factor k/Factor k	
Setting range	0.1...1.5
Resolution	0.01
Time constant/Time constant τ1	
Setting range	1.0...1000.0 min
Resolution	0.1 min
Thermal alarm value/Alarm	
Setting range	50%...100% of thermal level
Resolution	1%
Reserve time thermal alarm/Reserve value	
Setting range	1.0...1000.0 min
Resolution	0.1 min
Operating mode/T°mode	
Options	Current; Ambient
Nominal ambient temperature/T°nominal	
Setting range	-40... +300 °C (-40... +572 °F)
Resolution	1 °C (1.8 °F)
Max object temperature/T°max	
Setting range	-40 - +300 °C (-40...+572 °F)
Resolution	1 °C (1.8 °F)
Alarm temperature/T°alm	
Setting range	0... +300 °C (32...+572 °F)
Resolution	1 °C (1.8 °F)
Min ambient temperature/T°min	
Setting range	-40... 300 °C (-40... +572 °F)
Resolution	1 °C (1.8 °F)
Default ambient temperature/T def ambient	
Setting range	-40...300 °C (-40...+572 °F)
Resolution	1 °C (1.8 °F)
Thermal level init value/ Heating H(t) init	
Setting range	0%...90%
Resolution	0.1%

79. I_{nom}
80. Available for P5T30 only.

Table 73 - Settings and characteristics of the thermal overload protection stage 49F (Continued)

Settings/characteristics (description/label)	Values
Characteristics	
Tripping time accuracy	±5% or ±500 ms (with the applicable factor according to IEC 60255-149)
Setting group/SetGrp	
Number	4

Motor status

Description

There are three possible status for a motor: stopped, starting or running.

The PowerLogic P5 detects motor start by CB position, motor current, or both CB position and motor current using “Motor start detection mode”.

- CB Position: The CB position changes from open to closed.
- Current: Three phase currents have been less than 5% Inom(phase CT primary nominal). Then any of the three phase currents increases and exceeds the motor start detection current.
- CB Position and Current: Any of the three phase currents exceeds the motor start detection current in 90 ms after CB position changes from open to close.

Figure 229 - Motor status

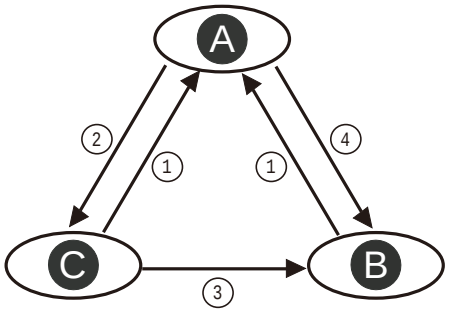

P533BWB

A	Stopped	B	Running
C	Starting		

Criterion for motor in starting state

1. As soon as the motor start is detected, the motor changes from “Stopped” state to “Starting” state.②

   NOTE: Motor start counter counts the number of successful starts, not including the emergency restart.

Criterion for motor in stopped state

1. If the motor start criterion is “CB Position”, the motor is in “Stopped” state when CB is open. ①
2. If the motor start criterion is “Current” or “CB & Current”, the motor is in “Stopped” state when three phase currents are all less than 5% Inom (phase CT primary nominal). ①

Criterion for motor in running state

1. When the motor is in “Starting” state and three phase currents drop below the motor start detection current for 100 ms, the motor state changes to “Running”. ③

2. If the motor start is not detected successfully and the criteria for motor in “Stopped” state are not satisfied, the relay will consider the motor is in “Running” state.

   For example: if the motor start detection mode is “CB & Current” and all three phase currents do not exceed the motor start detection current within 90 ms after CB is closed, the motor start is not detected. Motor state changes from “Stopped” state to “Running” after the 90 ms timing window. ④

Typical diagrams for the detection of successful direct-on-line start and soft start are shown in the following diagrams, with the use of the “CB & Current” mode.

Figure 230 - Successful DOL start

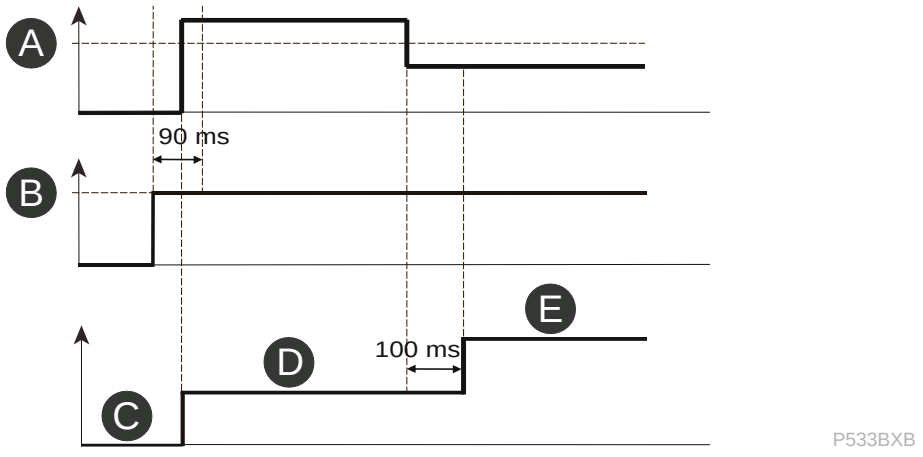

A	Motor start detection current	B	CB Closed
C	Motor stopped	D	Motor starting
E	Motor running		

Figure 231 - Successful soft start

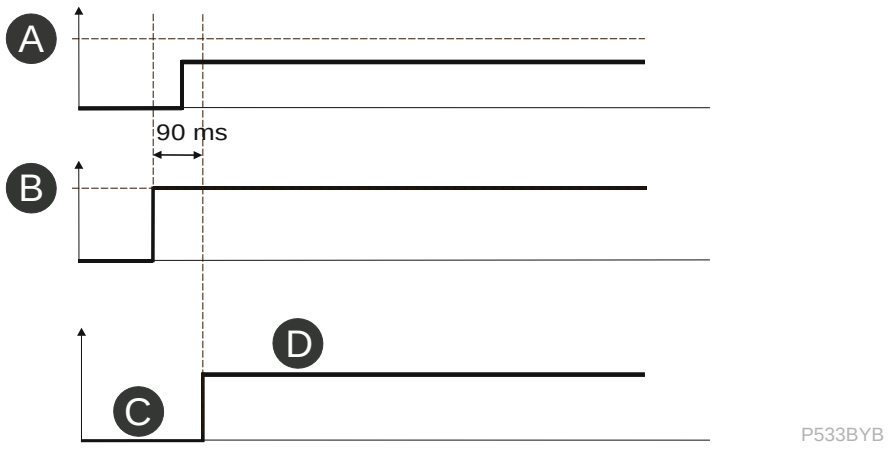

A	Motor start detection current	B	CB Closed
C	Motor stopped	D	Motor running

If the corresponding condition is satisfied in two consecutive executions, the motor status is changed.

General settings

Settings (description/label)	Value
Nom motor start current/Imot nom start	
Setting range	1.50...10.00 pu[81]
Resolution	0.01 pu[81]
Motor start detection current/I_{start}>	
Setting range	0.10...10.00 pu[81]
Resolution	0.01 pu[81]
Reset ratio	95% ± 2%
Minimum hysteresis	5 mA secondary
Motor start detection mode/StrDetMod	
Options	CB Position; Current; CB & Current

81. I_{nom}

Motor speed detection

Description

Motor rotation speed (Ω) can be measured based on cams mounted on a rotor with a proximity sensor. The output from the proximity sensor is a train of electrical pulses, where each pulse corresponds to the detection of an individual cam. Hence, if a given application has R number of cams mounted 360º/R apart on a rotor, the number of cams R is equal to the number of pulses per rotation of the rotor shaft. The time interval T (in seconds) between consecutive pulses can be used to calculate the revolutions per minutes (rpm), using: Ω = 60 / (R x T).

Figure 232 - Proximity sensor

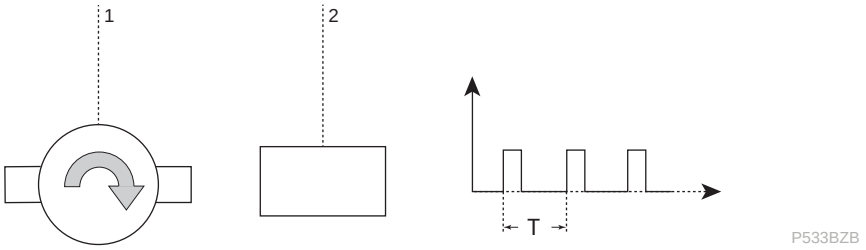

1 Rotor with 2 cams

2 Proximity sensor

Table 74 - Characteristics of proximity sensor

Characteristics	Values
Pass-band (in Hz)	> 2 Ω_n x R/60 Ω_n is rated motor rotation speed.
Output	24...250 V DC, 3 mA minimum
Leakage current in open status	< 0.5 mA
Voltage dip in closed status	< 4 V (with 24 V power supply)
Pulse duration	0 status > 120 µs 1 status > 200 µs

The proximity detector output pulses are at a voltage level which is compatible with the logic inputs (24...240 V DC), which means that a logic input must be mapped to a given proximity detector to perform the speed measurement. The 12I4O module contains a specific digital input (DI1) to detect the motor speed. It can recognise the high voltage signal as status 1 with > 200 us pulse width and the low voltage signal as status 0 with > 120 us pulse width.

PowerLogic P5 protection relay can only use one speed detection input. If several 12I4O modules (such as Slot C, Slot D, Slot E) are fitted in the PowerLogic P5 protection relay, the user can select the dedicated digital input from any of the 12I4O modules for motor speed detection. If there is no 12I4O module fitted in the relay, the motor speed detection and motor overspeed / underspeed protection will be invisible.

NOTICE

UNINTENDED EQUIPMENT OPERATION

If the counting input DI1 on 12I4O is selected for motor speed detection, this input cannot be used by any other protection functions.

Failure to follow this instruction can result in equipment damage.

When the motor speed detection function is Enabled and one specific digital input is selected as motor speed input, the settings, such as “Delay”, “On Event”, “OFF

Event” and “Debounce” settings in “Control/digital inputs” are automatically noneffective for this selected digital input.

This function provides an output signal “Zero speed”. If the PowerLogic P5 protection relay does not detect the pulse from the proximity sensor for motor speed measurement for a settable duration, the zero speed output signal is ON.

Block diagram

Figure 233 - Block diagram of zero speed detection

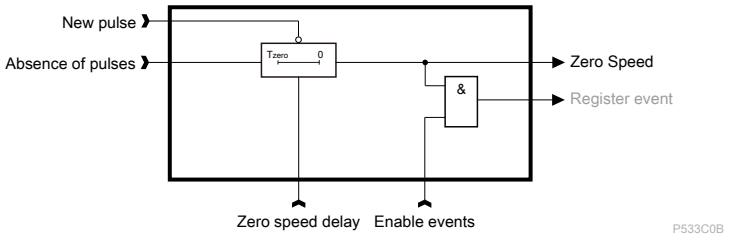

Characteristics

Table 75 - Settings and characteristics of motor speed detection protection

Settings/characteristics (description/label)	Values
Motor speed input/Speed input	
Options	Selection of DI for motor speed • PowerLogic P5U20 12I4O DI1 on Slot C • PowerLogic P5M30 12I4O DI1 on Slot C, D, E This selection is dependent on the hardware configuration of the device.
Rated motor speed Ω_n/Ω_n	
Setting range	100...3600 rpm
Resolution	1 rpm
Pulse per rotation/R	
Setting range	1...900 (with limitation Ω_n x R / 60 ≤ 1500)
Resolution	1
Zero speed confirm time/Zero speed delay	
Setting range	1...300 s
Resolution	1 s
Accuracy	±2% or ±150 ms
Motor speed measurement	
Range	0...7200 rpm
Resolution	1 rpm
Accuracy	±1 rpm
Refresh interval	1 s
Measurement time	100 ms
Setting group/SetGrp	
Number	1

Motor start time supervision (ANSI 48)

Description

The motor start time supervision protection function (ANSI code 48) helps to protect the motor against prolonged direct-on-line (DOL) starts caused by, for example, a stalled rotor, too high inertia of the load or too low voltage.

During the motor starting, the current exceeds the motor full load current and motor thermal stress increases quickly. So motor overheating is possible if the duration of the motor starting exceeds the set period.

This function is sensitive to the fundamental frequency component of the phase currents.

The motor start time supervision protection Ist> measures the fundamental frequency component of the phase currents.

The Ist> stage can be configured for definite operate time or dependent operate time characteristic. For a weak voltage supply, the dependent characteristic is useful allowing more start time when a voltage drop decreases the start current and increases the start time. Equation 7.7 defines the dependent operate time. Example of an dependent operation time of the motor start time supervision protection function, page 349 shows an example of the dependent characteristic. If the measured current is less than the specified start current I_{start}, the operate time is longer than the specified start time T_{start}.

$$T = \left(\frac{I_{nomMotSt}}{I}\right)^2 \times T_{start}$$

P533C1B Equation 7.7

Where:

T = Dependent operate time

$I_{nomMotSt}$ = Nominal motor start current

I = Maximum of IA, IB, IC

T_{start} = Motor start time

Figure 234 - Example of an dependent operation time of the motor start time supervision protection function

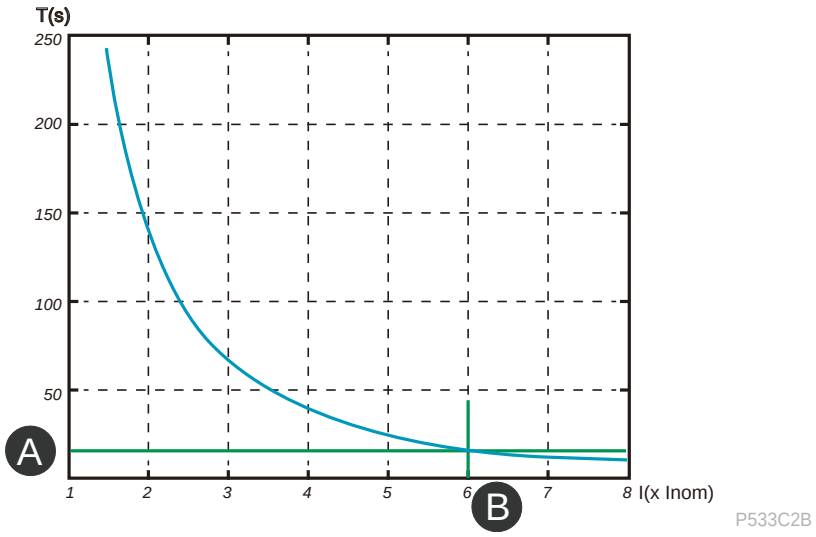

A	T_{start} = 15 s, maximum allowed start time.	B	I_{start} = 6 x Inom, rated start current.

NOTE:

The pick-up current setting I_{start}> is the start detection level of the start current. While the motor status is starting and the current exceeds the pick-up setting I_{start}>, the motor start-up supervision stage starts to count the operate time.

When current drops below the setting I_{start}>, the motor start-up supervision stage releases. Motor start-up supervision is active only during the starting of the motor.

Block diagram

Figure 235 - Block diagram of the motor start time supervision function (ANSI 48)

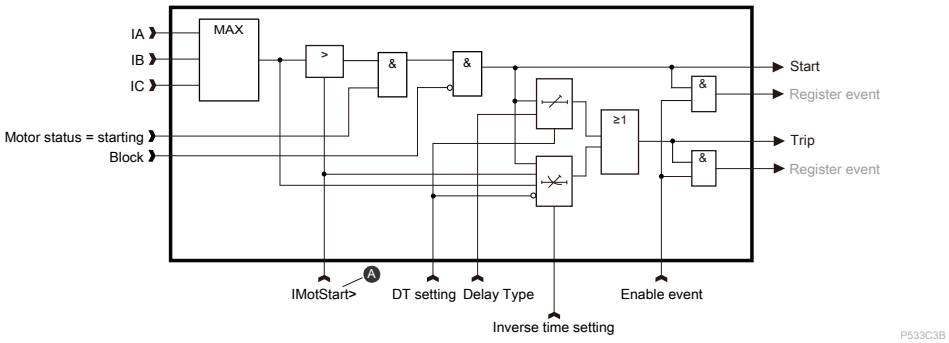

A	IMotStr is set in motor status function as motor start detection current.

Characteristics

Table 76 - Settings and characteristics of the motor start time supervision protection stage Ist>

Settings/characteristics (description/label)	Value
Operating curve/Delay type	
Options	DT (definite time); INV (inverse time)
Motor start time/Motor start operate time delay	
Setting range	1.0...300.0 s
Resolution	0.1 s
Accuracy	±1% or ±20 ms (DT) ±5% or ±20 ms (INV)
Characteristic times	
Start time	< 70 ms (65 ms with high speed)
Disengaging time	< 85 ms (100 ms with high speed)
Setting groups/SetGrp	
Number	1

NOTE: For motor start detection current and nominal start current settings, see Motor status, page 344.

Thermal overload protection for machine (ANSI 49M)

Description

The Thermal Overload protection function for machine (ANSI code 49M) can be applied to help prevent damage on the stator and rotor against overloading conditions due to balanced and unbalanced currents.

- The PowerLogic P5 protection relays designed for protecting machines incorporate a current based thermal replica, using phase current to reproduce the heating and cooling of the equipment to be protected. In this case, the PowerLogic P5 protection relay automatically uses the highest phase current as input information for the thermal model. The current measurement is based on 3 phase RMS currents, that takes into account harmonic rank up to 15. The mathematical model used to compute the thermal level of the protected equipment is based on the thermal model defined in the IEC 60255-149 standard.
- The thermal replica takes into account the overheating generated by the negative sequence current in the motor, with a weighting defined by a settable coefficient, depending on the motor characteristics.
- The thermal replica provides the capability to set two heating time constants, one for starting sequence or the phase current is greater than the motor start threshold (e.g. locked stator in running state) and one for normal running, in addition to the cooling time constant applied when the motor is stopped. The selection of the time constants are decided according to the motor state input from the motor status function. Besides, the time constant τ_2 is also decided by the max phase current which is greater than the motor start value. Indication of the time constant τ_1 and time constant τ_2 active is provided by means of digital outputs.
- The thermal replica can optionally take account of ambient temperature, preferably when an ambient temperature sensor is available. However, where an ambient temperature sensor is not available, the user may enter a default value for ambient temperature which is different to the value defined in the protected equipment data sheet (for example, to take account of summer and winter ambient temperature values).

NOTE: The motor thermal level in thermal overload (ANSI code 49M) function can be reset by Modbus communication.

The Thermal Overload for machine protection can be used in two different setting modes:

- Current based setting mode
- Temperature based setting mode

The following sections explain the two setting modes.

Current based setting mode

This setting mode is active when "Operating mode" is set to "Current". In this setting mode, the thermal level H(t) is computed according to the thermal model defined in the IEC 60255-149.

According to the user settings, in general, the thermal level is computed by three different ways according to the three different motor states:

- Running state
- Starting state
- Stopped state

Motor in running state

When the motor is running, the thermal level H(t) is computed according to the following equation:

$$H(t) = H(t - \Delta t) + \left(\frac{I_{eq}(t)}{k \times I_b}\right)^2 \times \frac{\Delta t}{\tau_1} - H(t - \Delta t) \times \frac{\Delta t}{\tau_1}$$

P533C4B

where:

- H(t) is the thermal level computed at time t.
- H(t - Δt) is the thermal level computed at time t - Δt.
- $$I_{eq} = \sqrt{max\ (IA,IB,IC)^2 + q \times (I2)^2}$$

  P533C5B

  where:

  - IA, IB, IC are the RMS phase currents.
  - q is a user setting to define the unbalance factor ("Unbalance factor" or "Factor q").

    For an asynchronous motor, q is determined as follows:

    $$q = 2 \times \frac{T_{LR} / I_{LR}^2}{S_n} - 1$$

    P533C6B

    I_{LR} is the motor locked rotor current/ starting current in pu value.

    T_{LR} is the motor locked rotor torque in pu value.

    S_n is rated slip.

    NOTE: In 2 CT mode it is recommended to set q = 0.
  - I2 is the negative sequence current.

    NOTE: The actual measured equivalent current is displayed as I% load = I_{eq} / (k x I_b) in the function.
- I_b is the "Base current" or "Machine nominal current".
- k is the “Max. permissive current factor” or the "k" factor applied to the basic current to define the maximum continuous current.
- τ_1 is the heating thermal time constant of the motor ("Heating time constant 1" or "Time constant τ_1"), where τ_1 is assumed to be much greater than Δt.

In the equation above the term "$[I_{eq}(t) / (k \times I_b)]^2 \times \Delta t / \tau_1$" expresses the heat transfer due to the phase current $I_{eq}(t)$, and the term "$H(t - \Delta t) \times \Delta t / \tau_1$" expresses the natural cooling of the devices (in the running state).

The digital output Motor TC1 active is asserted in this state.

Motor in starting state

When the motor is starting, the user can set a different time constant, to take into account the heating effect on rotor windings during the starting sequence. In that state, the thermal level H(t) is computed according to the same equation than above, where the time constant τ_1 is replaced by the time constant τ_2.

$$H(t) = H(t - \Delta t) + \left(\frac{I_{eq}(t)}{k \times I_b}\right)^2 \times \frac{\Delta t}{\tau_2} - H(t - \Delta t) \times \frac{\Delta t}{\tau_2}$$

P533C7B

Where τ_2 is the heating time constant during starting sequence or the phase currents is greater than the motor start threshold ("Heating time constant 2" or "Time constant τ_2").

The digital output Motor TC2 active is asserted in this state.

Motor in stopped state

When the motor is stopped, the cooling effect is dominant since there is no heating contribution, so a cooling time constant must be taken into account in the stopped state. In that state, the thermal level H(t) is computed according to the following equation:

$$H(t) = H(t - \Delta t) - H(t - \Delta t) \times \frac{\Delta t}{\tau_3}$$

P533C8B

Where τ_3 is the cooling thermal time constant of the protected equipment ("Cooling time constant" or "Time constant τ_3").

The digital outputs Motor TC1 active and Motor TC2 active are reset in this state.

The thermal overload protection operates when the thermal level is greater than 100%. This thermal level of 100% can be reached with a permanent current above the basic current value ("Base current" or "I_b") multiplied by the k factor (Max. permissive current factor).

With a continuous load current "I_{eq}", the thermal level "H" is equal to:

$$H(I_{eq}) = \left(\frac{I_{eq}}{k \times I_b}\right)^2$$

P533BNB

The table below indicates the thermal level with different values of continuous load current:

I_{eq} / (k x I_b) ratio	Thermal Level (%)
1	100% (operation)
0.9	81%
0.8	64%
0.7	49%
0.6	36%
0.5	25%
0.4	16%
0.3	9%

Generally, the base current I_b is set to the motor rated current, and overload factor k should be set to take into account the motor overload capability. For motors with the service factor as 1.0 and thermal class F/B, the overload factor k is 1.15.

An thermal alarm ("49M alarm" output) is provided which operates when the thermal level is greater than or equal to the "Thermal alarm value" setting (expressed in %) and is usually set to be lower than 100%, the operate level. This signal can be used to lock the CB reclosing until thermal state is back under the alarm level.

The thermal level in % is accessible as an output measurement.

When thermal overload is managed in the several setting groups, the thermal level is kept after the setting group change (no thermal level reset), and the thermal level is computed according to the new settings.

Temperature based setting mode

This setting mode is active when "Operating mode" setting is set to "Ambient". In this setting mode, the protected equipment temperature computation is based on the previous thermal level H(t) calculation (see previous section Current based setting mode, page 351) with an additional reference to the maximum operating temperature of the equipment, the nominal ambient temperature and the working ambient temperature, defined by setting.

In this mode, the thermal level H(t) is computed with the following formula, derived from the equation of thermal level H(t) calculation:

$$H(t) = H(t - \Delta t) + F_a \times \left(\frac{I_{eq}(t)}{k \times I_b}\right)^2 \times \frac{\Delta t}{\tau} - H(t - \Delta t) \times \frac{\Delta t}{\tau}$$

P533BQB

Where common values are identical to the thermal level H(t) calculation formula, and the additional "F_a" ambient temperature factor is defined with the following equation:

$$F_a = \frac{T_{max} - T_{nom}}{T_{max} - T_a}$$

P533BRB

where:

- T_{max} is the maximum temperature of the equipment ("Max object temperature" setting).
- T_{nom} is the limit of the ambient temperature designed for the protected equipment to operate at rated loads without causing thermal degradation of insulation ("Nominal ambient temperature" setting, typically equal to 40 °C).
- T_a is the real time ambient temperature of the protected equipment measured with the RTD number 8.

The ambient temperature of the protected equipment is computed with the following formula:

$$T_{object} = H(t) \times (T_{max} - T_a) + T_a$$

P533BSB

Where H(t), T_{max} and T_a are defined according to the previous equations.

The thermal overload protection operates when the computed temperature "T_{object}" is above or equals the maximum temperature T_{max}.

A temperature alarm is provided ("49M T> alarm" output). This output operates when the temperature level is greater than or equal to the alarm temperature setting(expressed in °C).

The ambient temperature (T_a) and machine temperature (T_{object}) are accessible as output measurements in °C (T_a = "Ambient temperature" output and T_{object} = "Machine temperature" output).

Additional features

The thermal level computation expressed in % is always available with the motor thermal level output. The current thermal level is saved in a non volatile memory when the PowerLogic P5 protection relay is powered off. If the current thermal level is above 90%, a value of 90% is memorised to help prevent possible nuisance tripping on supply restoration.

A measurement output about the remaining time to trip ("Estimated time to trip") is provided, based on the hypothesis that the load current present remains constant until thermal overload operation occurs.

A time remaining alarm ("49M rsv alarm" output) is provided. It operates when the calculated remaining time is less than or equal to the "Reserve time thermal alarm" time setting.

A remote command can be used to reset the thermal level (e.g. after commissioning tests). This reset can be also performed from the local panel.

It is possible to block the protection function using the block matrix.

After each motor start sequence, the function is able to compute the thermal level consumed by the latest start. This measurement is accessible with the measurement output "Motor start thermal level/Motor start H(t)". When the thermal level calculation is above (100% - Motor start H(t)), the output signal "Block motor start" is asserted to inhibit CB Closing from taking place. The output time measurement output "Time left for motor start" provides the remaining time until the motor can be started.

There is a digital input (“MThLevRst” signal) to reset the thermal level value, when the digital input is asserted, the value of Thermal level H(t) shall be set to Zero.

Conditions (defined by settings)	Impact on thermal level computation
Stopped state	$I_{eq}(t) = 0$ Cooling time constant τ_3 is used
I > MotStrVal setting or starting state	Heating time constant 1 τ_2 is used
Running state and I < MotStrVal	Heating time constant 1 τ_1 is used

Time to trip calculation

For a continuous current higher than the current threshold (k x I_b), the operate time of the thermal overload protection can be computed with the following equation:

$$t = \tau \times L_n \times \left(\frac{F_a \times H(I_{eq}) - H_0}{F_a \times H(I_{eq}) - 100\%}\right)$$

P533BOB

where:

- τ is the heating time constant for the protected equipment.
  - When the motor is in starting state, the heating time constant 2 is used;
  - When the motor is in running state, the heating time constant 1 is used;
- L_n( ) is natural logarithm function.
- F_a is the ongoing temperature compensation. In current based setting mode, F_a = 1.
- $H(I_{eq})$ is the thermal level calculated with the continuous load current and the base current.
- H_0 is the current thermal state corresponding to the last calculation.

In the same way, for a continuous current higher than the current threshold (k x I_b), the time for the alarm to operate is:

$$t = \tau \times L_n \times \left(\frac{F_a \times H(I_{eq}) - H_0}{F_a \times H(I_{eq}) - H_{alarm}}\right)$$

P533BTB

where:

H_{alarm} is "Alarm", the alarm threshold setting in % of thermal level. In temperature based setting mode, the threshold alarm threshold is expressed in °C with "T_{alm}" setting. The corresponding thermal level in % (H_{alarm}) is defined by the following equation:

$$H_{alarm} = \frac{T_{alm} - T_a}{T_{max} - T_a} \times 100\%$$

P533BUB

Time left for motor start

The thermal level of last motor start state need firstly be calculated through following equation:

$$H_{start} = F_a \times \left(\frac{I_{start}}{k \times I_b}\right)^2 \times \frac{t_{start}}{\tau_{start}}$$

P533Q1B

where:

- F_a is ambient temperature factor calculated by:

  $$F_a = \frac{T_{max} - T_{nom}}{T_{max} - T_a}$$

  P533BRB

  If it is current only mode, then F_a = 1.

- I_{start} is the start current detected during last motor start.
- I_b is the basic current of the machine (setting).
- k is the factor (setting) applied to the basic current to define the maximum continuous current.
- t_{start} is the time duration of motor starting state.
- τ_2 is the heating time constant 2.

When the thermal level H(t) is above (100% - H_{start}), time left for motor start is defined with the following equation:

$$t = \tau_{cooling} \times L_n\left(\frac{H(t)}{100\% - H_{start}}\right)$$

P533Q2B

where:

- H(t) is the thermal level calculated at the moment.
- τ_3 is the cooling time constant when motor is stopped.

Block diagram

Figure 236 - Block diagram of thermal overload protection function (ANSI 49M)

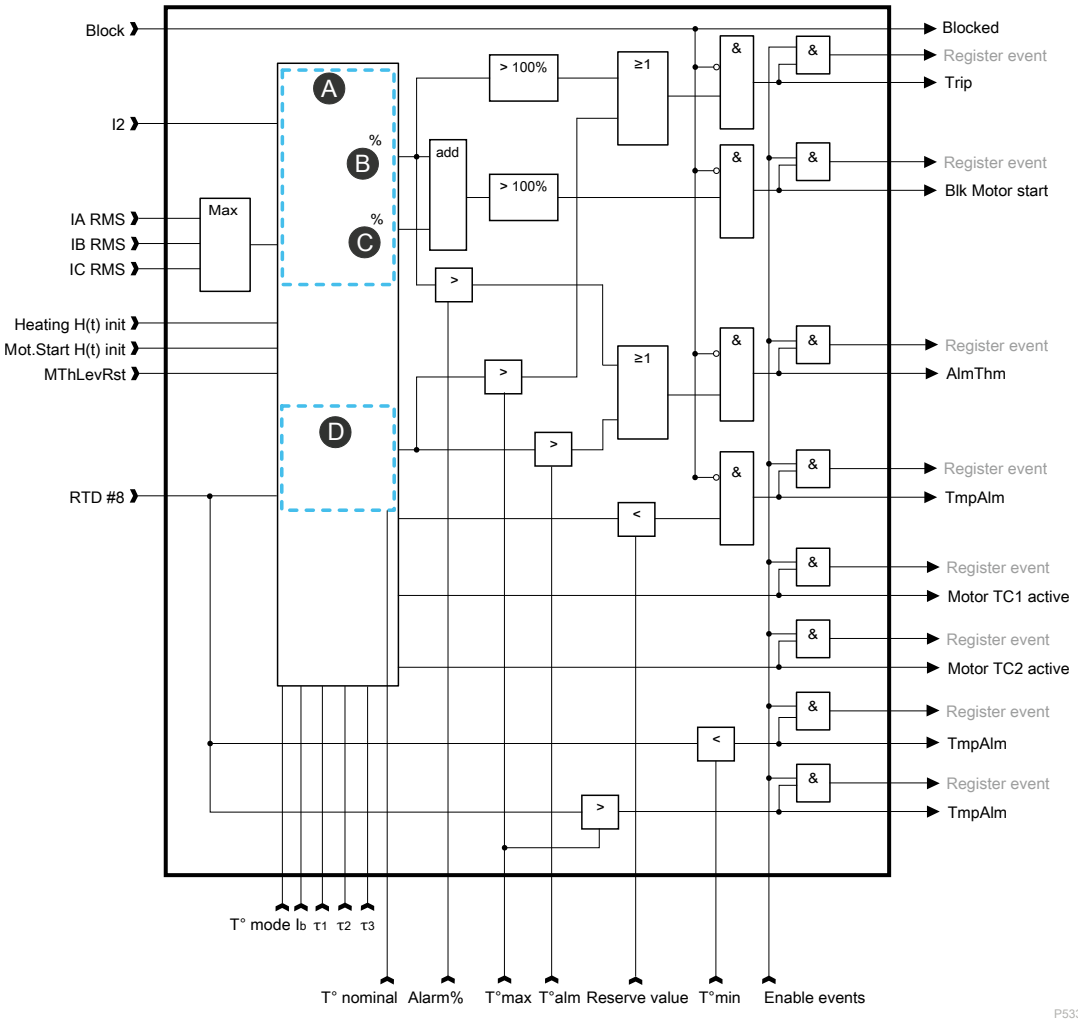

A	Current based mode calculation	B	Therm level
C	Motor str level	D	Temperature based mode calculation

Characteristics

Table 77 - Settings and characteristics of the thermal overload protection stage 49M

Settings/characteristics (description/label)	Values
Base current/I_b	
Setting range	0.1...4.0 pu[82]
Resolution	0.01 pu[82]
Overload factor k/Factor k	
Setting range	0.10...1.50
Resolution	0.01
Heating time constant 1/Time constant Ʈ1	
Setting range	1.0...1000.0 min
Resolution	0.1 min
Heating time constant 2/Time constant Ʈ2	
Setting range	1.0...1000.0 min
Resolution	0.1 min
Cooling time constant/Time constant Ʈ3	
Setting range	1.0...1000.0 min
Resolution	0.1 min
Unbalance factor/Unbalance factor	
Setting range	0.0...10.0
Resolution	0.1
Thermal alarm value/Alarm	
Setting range	50%...100% of thermal level
Resolution	1%
Reserve time thermal alarm/Reserve value	
Setting range	1.0...1000.0 min
Resolution	0.1 min
Operating mode/T°mode	
Options	Current; Ambient
Nominal ambient temperature/T° nominal	
Setting range	-40...+300 °C (-40...+572 °F)
Resolution	1 °C (1.8 °F)
Max object temperature/T° max	
Setting range	-40...+300 °C (-40...+572 °F)
Resolution	1 °C (1.8 °F)
Alarm temperature/T° alm	
Setting range	0...+300 °C (32...+572 °F)
Resolution	1 °C (1.8 °F)

82. I_{nom}

Table 77 - Settings and characteristics of the thermal overload protection stage 49M (Continued)

Settings/characteristics (description/label)	Values
Min ambient temperature/T° min	
Setting range	-40...300 °C (-40...+572 °F)
Resolution	1 °C (1.8 °F)
Default ambient temperature/T° dft ambient	
Setting range	-40...300 °C (-40...+572 °F)
Resolution	1 °C (1.8 °F)
Characteristics	
Tripping time accuracy	±5% or ±500 ms (with the applicable factor according to IEC 60255-149)
Setting group/SetGrp	
Number	4

NOTE: To test the thermal overload protection more easily and faster, it is possible to set a thermal level init. value and a motor start thermal level init. value from 0% to 90%. After test, it is possible to reset the values to 0%.

Locked rotor (ANSI 51LR)

Description

The locked rotor protection function (ANSI code 51LR) stage I_{lr}> measures the fundamental frequency component of the phase currents and calculates the maximum of the measured three phase currents.

The locked rotor stage protects the motor when too heavy load or a mechanical failure of the motor causes rotor jam during the motor running condition.

The stage's start setting is relative to the motor's nominal starting current. The nominal starting current can be configured in the **Motor status** view of the **Protection** menu in eSetup Easergy Pro.

The locked rotor stage can be configured for definite time or inverse time operation characteristic. *Equation 7.8* defines the dependent operate time.

$$T = \left(\frac{I_{motNomSt}}{I}\right)^2 T_{start}$$

P533FNB Equation 7.8

T = Dependent operate time

$I_{motNomSt}$ = Nominal motor start current

I = Maximum of IA, IB, IC (to be unique with Ist> function)

T_{start} = Operation delay

When the measured maximum phase current I exceeds the defined start setting, the locked rotor protection stage starts operation delay calculation. When the calculated delay exceeds the operation delay in DT or INV delay mode, the protection operates.

The stage releases when the maximum phase current I drops below the start setting.

The stage operation is automatically blocked when the motor status is “starting”.

Block diagram

Figure 237 - Block diagram of the locked rotor protection stage I_{lr}>

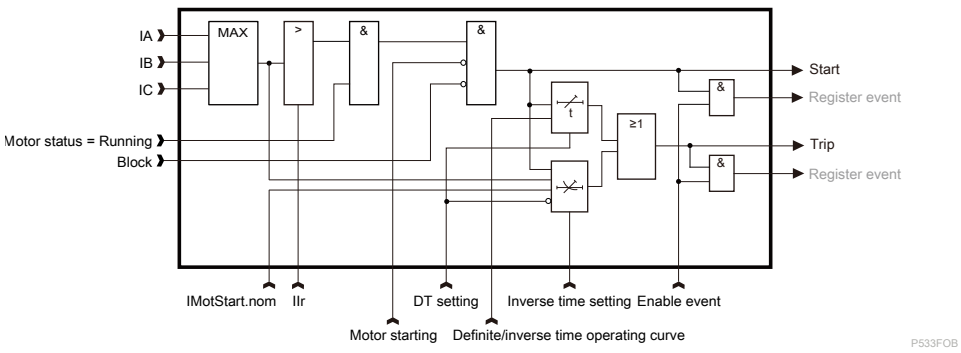

Characteristics

Table 78 - Settings and characteristics of the locked rotor protection stage I_{lr}>

Settings/characteristics (description/label)	Values
Pick-up value/I_{lr}>	
Setting range	10%...100% IMotStart.nom[83]
Resolution	0.1%[83]
Accuracy	±3%[83]
Reset ratio	97% ± 2%
Operating curve/Delay type	
Options	DT (definite time); INV (inverse time)
Operate delay/Operate delay	
Setting range	1.0...300 s
Resolution	0.1 s
Accuracy	±1% or ±20 ms (DT) ±5% or ±20 ms (INV)
Characteristic times	
Start time	< 60 ms (55 ms with high speed) for currents at 2 x I_{lr} < 70 ms (65 ms with high speed) maximum
Disengaging time	< 85 ms (100 ms with high speed)
Setting group/SetGrp	
Number	1

83. IMotStr.nom is set in motor status function.

Motor restart inhibition (ANSI 66)

Description

Any motor has a restriction on the number of starts within a defined period to avoid the over temperature of the motor, mainly inside the rotor. A settable time interval between two consecutive starts is also necessary to allow the motor to cool down following the previous start. The motor restart inhibition function (ANSI code 66) includes two elements “number of starts limitation” and “minimum time between starts”.

To enable the motor restart inhibition function (ANSI code 66), as well as other protection functions (ANSI 48, ANSI 49M, ANSI 51LR), which are all related with motor, the “Motor status” detection function shall be enabled. Since the motor restart inhibition function uses the “Thermal Level” input to differentiate between motor cold start and hot start, the motor thermal overload protection (ANSI 49M) must also be enabled.

Number of starts limitation

Depending on the initial motor thermal level, there are two types of motor start.

- Cold start

  The initial thermal state is not greater than setting “Hot status limit”.
- Hot start

  The initial thermal state is greater than setting “Hot status limit”.

Once the motor start is detected (refer to Motor status section for details), the PowerLogic P5 protection relay initiates a monitor timer defined by the setting “Reference period”, and the cold start counter or hot start counter is incremented by one. Each motor start has one corresponding monitor timer. When the monitor timer expires, the motor start related with that monitor timer will be removed from the cold or hot start counter (decremented by one). When the motor is stopped, the PowerLogic P5 protection relay will compare the cold and hot start counters with the settings “Max motor cold starts” and “Max motor hot starts”, respectively. If either of these two counters reaches the related setting, the motor restart is inhibited (“N> motor start inhibition” = True) until the concerned monitor timer expires and the cold or hot start counter is below the setting.

Example:

The maximum number of motor cold starts is 2 and maximum number of motor hot starts is 1. Two cold starts are detected. When the 2nd motor stop is detected, the cold start counter reaches the setting. So, motor restart is inhibited until the first monitor timer expires.

Figure 238 - Motor restart inhibition example 1

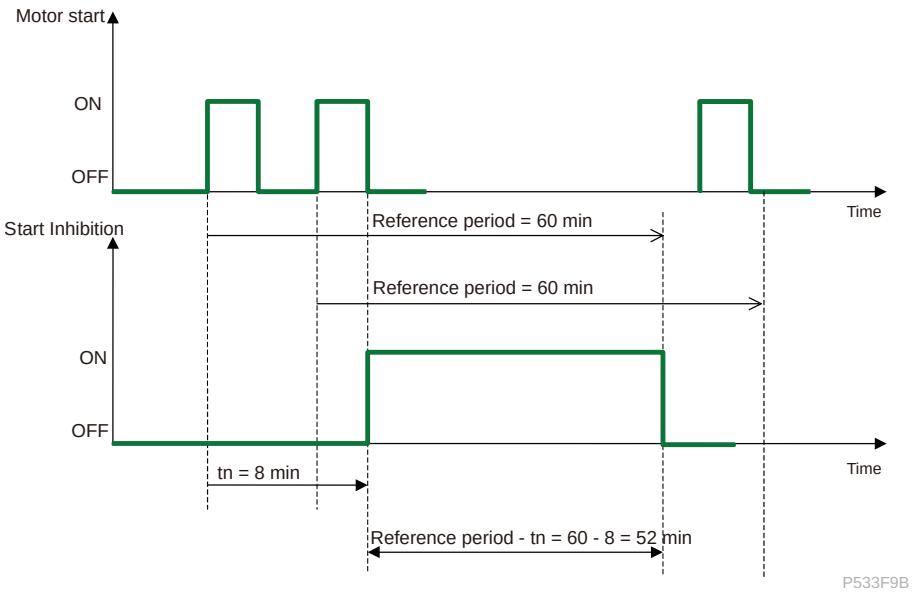

Minimum time between starts

Once the motor start is detected (refer to Motor status section for details), the PowerLogic P5 protection relay initiates another monitor timer defined by setting “Min time between motor starts”. When the motor is stopped (CB is open or current is less than 5% Inom depending on the motor start detection mode), and the monitor timer of the last motor start has not expired, the PowerLogic P5 will also inhibit the restart until the monitor timer expires.

Figure 239 - Motor restart inhibition example 2

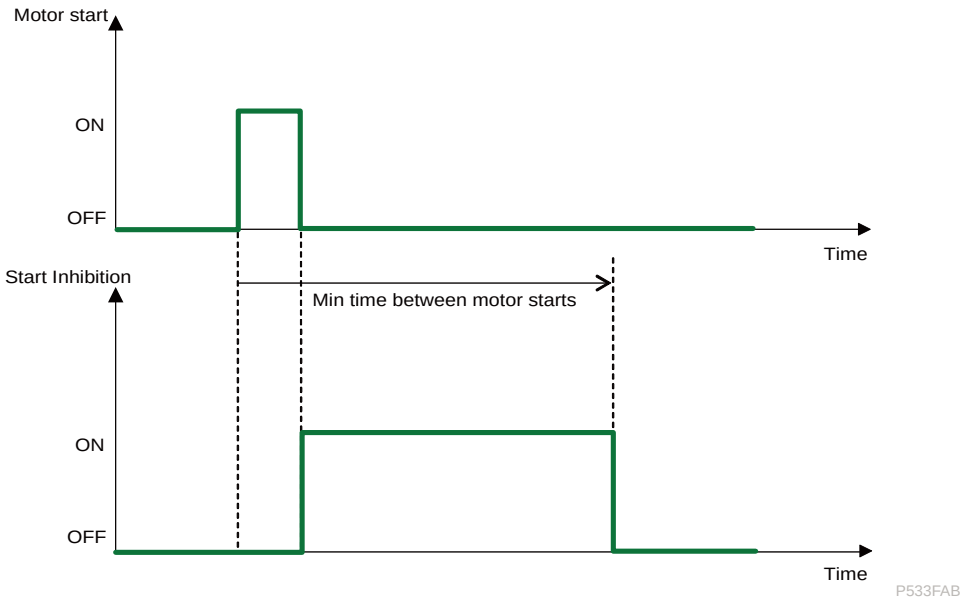

So, the motor restart inhibition function is active if any one of the following conditions is satisfied:

- Blocking due to number of starts limitation
- Blocking due to minimum time between 2 starts

Motor connection example

Motor restart inhibition application example, page 363 shows an application for preventing too frequent motor starts using the N> stage. The close coil wire has been connected through the normally closed (NC) contact of the signal relay , which is controlled with the N> start inhibit signal. Whenever the N> motor start inhibit signal becomes active, it prevents the circuit breaker from closing.

Figure 240 - Motor restart inhibition application example

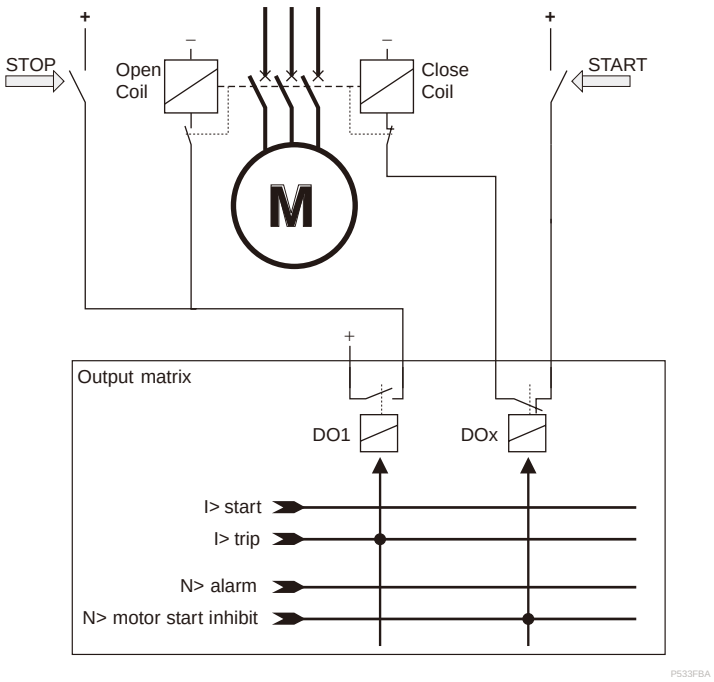

Block diagram

Figure 241 - Block diagram of the motor restart inhibition function (ANSI 66)

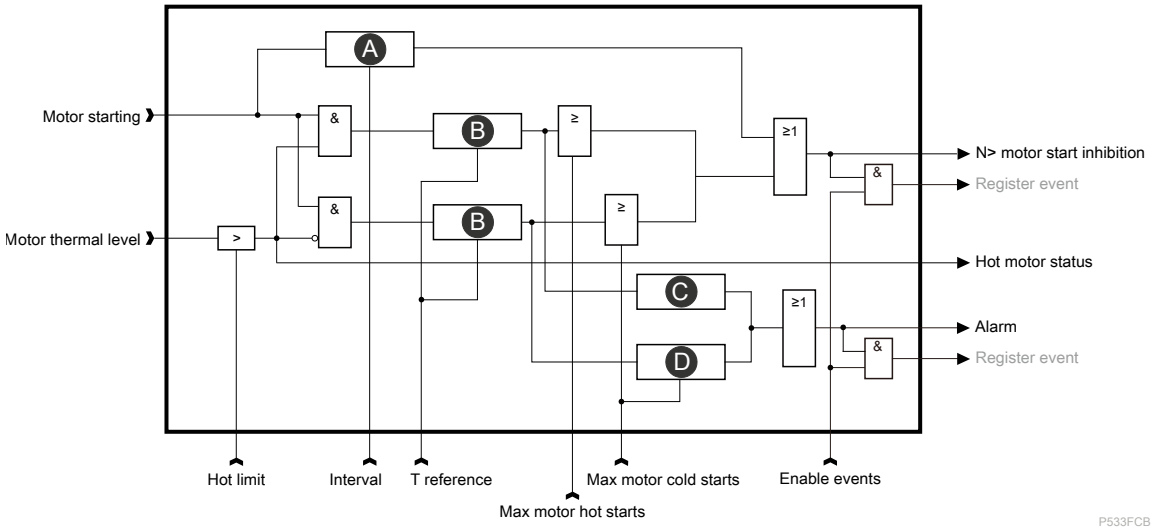

A	Min. time between motor starts	B	Count num. during reference period
C	≥ Hot starts/t -1	D	≥ Cold starts/t -1

Characteristics

Table 79 - Settings and characteristics of the motor restart inhibition function (ANSI 66)

Settings/characteristics (description/label)	Values
Reference period/T reference	
Setting range	10.0...120.0 min
Resolution	0.1 min
Hot status limit/Hot limit	
Setting range	0%...100.0% H(t)[84]
Resolution	0.1% H(t)[84]
Max motor/Hot starts	
Setting range	1...20
Resolution	1
Max motor/Cold starts	
Setting range	1...20
Resolution	1
Min time between motor starts/Interval	
Setting range	0.0...100.0 min
Resolution	0.1 min
Def. motor start elap. time/Time by default	
Options	0 min; 120 min
Setting groups/SetGrp	
Number	1

84. Motor thermal level

Motor overspeed (ANSI 12)

Description

Based on the direct measurement of motor speed, the motor overspeed protection function (ANSI code 12) detects racing when the motor is driven by the load, or a loss of synchronisation for synchronous motors, or for process monitoring.

Motor overspeed protection is only available when motor speed detection function is Enabled.

The PowerLogic P5 protection relay provides two stages of motor overspeed protection. Whenever the motor speed reaches the pick-up value of a particular stage, this stage starts and a start signal is issued. If the fault remains active longer than the operating delay setting, a trip signal is issued.

If there is no 12I4O module fitted in the relay, the motor overspeed protection will be invisible.

Block diagram

Figure 242 - Block diagram of the motor overspeed stages Motor overspeed Ω>1 12 and Ω>2 12

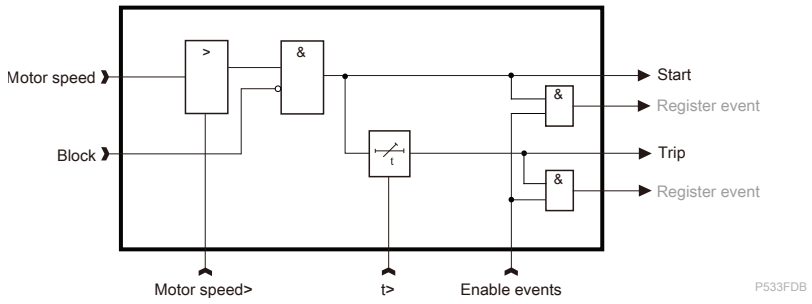

Characteristics

Table 80 - Settings and characteristics of the motor overspeed protection function (ANSI 12)

Settings/characteristics (description/label)	Values (stage Motor overspeed Ω>1 12)	Values (stage Motor overspeed Ω>2 12)
Pick-up value		
Setting range	100%...160% Ω_n	
Resolution	1% Ω_n	
Accuracy	±2%	
Reset ratio	95% ± 2%	
Operate delay		
Setting range	1...300 s	
Resolution	1 s	
Accuracy	±1% or ±25 ms	
Characteristic times		
Start time	< 250 ms + 2 x (60000 ms/ (Ω x R))	
Disengaging time	< 250 ms + 2 x (60000 ms/ (Ω x R))	

Table 80 - Settings and characteristics of the motor overspeed protection function (ANSI 12) (Continued)

Settings/characteristics (description/label)	Values (stage Motor overspeed Ω>1 12)	Values (stage Motor overspeed Ω>2 12)
Setting group/SetGrp		
Number	1	

Motor underspeed (ANSI 14)

Description

Based on the direct measurement of motor speed, the motor underspeed protection function (ANSI code 14) detects the slow-downs of motor speed after motor starting, possibly resulting from the mechanical overloads or locked rotor.

Motor speed protection is only available when motor speed detection function is Enabled.

The motor underspeed protection is active after the motor speed has successful achieved the speed pick-up value. As shown in figure below, the underspeed protection function picks up if the speed measured drops below the speed pick-up value after having first exceeded the set point by 5%. The underspeed protection is blocked when the motor speed drops below 5% of Ω_n rated motor speed to avoid unwanted tripping when the motor is switched off. If the underspeed protection starts longer than the operating delay setting, a trip signal is issued.

If there is no 12I4O module fitted in the relay, the motor underspeed protection will be invisible.

Figure 243 - Motor underspeed start and trip conditions

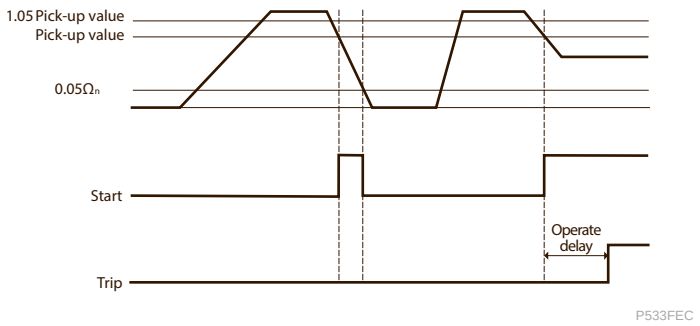

The PowerLogic P5 protection relay provides two stages of motor underspeed protection.

Block diagram

Figure 244 - Block diagram of the motor underspeed stages Motor speed<1 and Motor speed<2

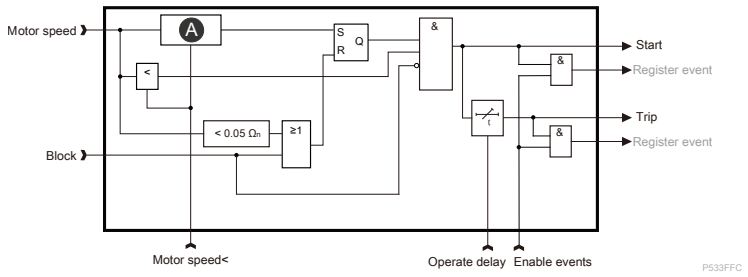

A	> 1.05 Pick-up value

Characteristics

Table 81 - Settings and characteristics of the motor underspeed protection function (ANSI 14)

Settings/characteristics (description/label)	Values (stage Motor speed<1)	Values (stage Motor speed<2)
Pick-up value/Motor speed<1, Motor speed<2		
Setting range	10%...100% Ω_n	
Resolution	1% Ω_n	
Accuracy	±2%	
Reset ratio	105% ± 2%	
Low motor speed self-blocking		
Value	5% Ω_n, fixed	
Accuracy	±2% x (5% Ω_n)	
Time delay/Operate delay		
Setting range	1...300 s	
Resolution	1 s	
Accuracy	±1% or ±25 ms	
Characteristic times		
Start time	< 250 ms + 2 x (60000 ms / (Ω x R))	
Disengaging time	< 250 ms + 2 x (60000 ms / (Ω x R))	
Setting group		
Number	1	

Motor Anti-backspin (ABS) protection

Description

For a motor with high inertia, once the CB/Contactor supplying power to the motor is switched off, the rotor may continue to turn for a considerable length of time. In that case, the motor terminal voltage is out of phase and the motor re-starting operation may result in serious damage. In some other applications for example when a motor is on a down-hole pump, after the motor stops, the liquid may fall back down the pipe and spin the rotor backwards. It would be very undesirable to start the motor at this time. In these circumstances the motor anti-backspin function is used to detect when the rotor has completely stopped, to allow restarting of the motor.

Three criteria can be used to detect whether rotor has completely stopped.

- Speed measured mode

  “Zero Speed” signal from motor speed detection function is ON. If there is no 12I4O module fitted in the relay, the speed measured mode will be invisible.
- External zero speed mode

  “Zero Speed DI” digital input is ON when a rotation detection sensor is available.
- Motor status

  Motor “Stopped” input from motor status function is ON and the delay timer expired.

When the “Zero Speed” input and the “Zero Speed DI” digital input are not available or disabled, this protection function simply provide a “Restart Delay” feature after the motor is stopped.

Only when “Motor Status” function is Enabled, “Motor Anti-backspin” protection can be activated. The output signal “AntiBkSpin Alarm” is ON when the motor status turns to be “Stopped” and the internal signal “ABSAllowRestart” is not satisfied. The “ABSAllowRestart” signal indicates if the rotor has completely stopped. The timer “Time to restart” is based on the setting “ABS Time” to indicate the left time before the motor restart is allowed. If the zero speed is detected, the timer “Time to restart” will be reset and the motor restart is allowed immediately.

Block diagram

Figure 245 - Block diagram of Motor Anti-backspin (ABS)

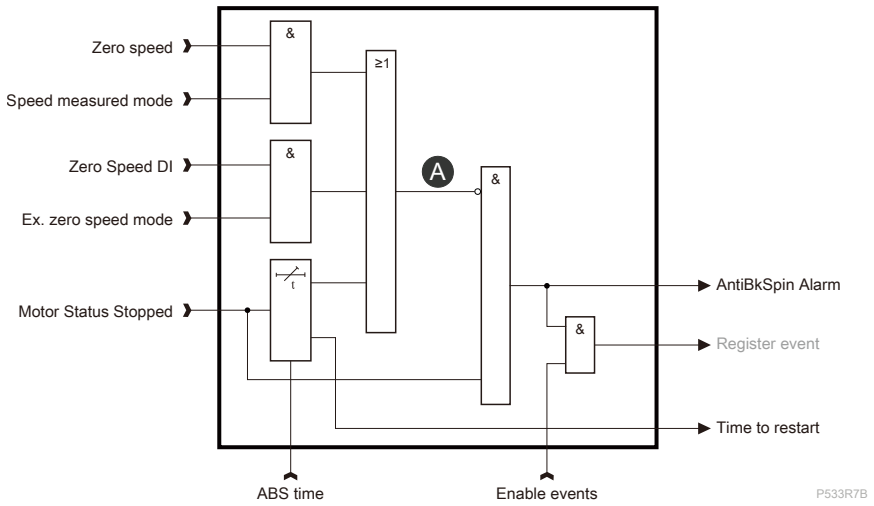

A	ABSAllowRestart

Characteristics

Table 82 - Settings and characteristics of Motor Anti-backspin (ABS) protection

Settings/characteristics (description/label)	Values
Measured zero speed mode/Speed measured mode	
Options	Enable; disable
Zero speed external mode/Ex. zero speed mode	
Options	Enable; disable
Zero speed input DI/Zero speed DI	
Options	Selection of one digital input (DIx)
Anti-backspin time/ABS time	
Setting range	1...7200 s
Resolution	1 s
Accuracy	±1% or ±25 ms
Setting group	
Number	1

Emergency restart

Description

It may be necessary to restart a hot motor when the system is in emergency. An emergency restart can be enabled through digital input/HMI/remote communication, then it removes all motor start inhibit. For a successful emergency restart, the emergency restart input should keep asserted during the whole motor starting period.

An operation counter is provided to record the number of emergency restarts. Emergency restart counter can be cleared via a command in HMI or remote communication.

When emergency restart is triggered, motor thermal overload protection (49M) responds to it

- When the motor is stopped, the signal “Block motor start” is reset and the motor thermal level is limited to **100% - Motor start thermal level** if the thermal level is higher than **100% - Motor start thermal level**.
- When the motor is starting, the thermal level is limited to 90%.
  Before the completion of motor starting, if the emergency restart is Off, the motor thermal level can increase to more than 90% during starting.
- When the motor is running, it has no impact on the motor thermal level.

When emergency restart is triggered, motor restart inhibition (66) protection responds to it

- When the motor is stopped, the signal “N> motor start inhibition” is reset and the value of emergency restart counter is incremented by 1.
- When the motor is starting, the detected motor start will neither impact the number of cold starts and hot starts nor trigger the timer of “Minimum time between motor starts”.
  If the emergency restart condition changes from On to Off prior to the completion of the motor starting, this motor starting is considered as a normal start.

  NOTE: The emergency restart will not impact the motor start counter and the minimum time between two starts.
- When the motor is running, it has no impact on motor restart inhibition (66).

When emergency restart is triggered, motor anti-back spin (ABS) protection responds to it

- When the motor is stopped, ABS works on timer between a stop and a start, then the signal “AntiBkSpin” is reset **(Measured zero speed mode** is OFF and **Zero speed external mode** is OFF).

  NOTE: The emergency restart will only impact ABS timer, it will not impact **Measured zero speed mode** and **Zero speed external mode**.
- When the motor is starting or running, it has no impact on ABS function.

Characteristics

Table 83 - Settings and characteristics of Emergency restart protection

Settings/characteristics (description/label)	Values
EMRE input/EMRE input	
Options	DIx; VIx; Fx

Inrush detection (ANSI 68H2)

Description

Second harmonic inrush blocking detects high transient current flows that usually occur when transformers are energised at no-load or the voltage is restored to the transformer after a brief voltage dip/interruption. It helps prevent tripping for this normal operation condition.

There are two ways to enable inrush blocking of protection functions:

- Within individual phase and neutral OC protection stages, check the **Inrush blocking** in any or all setting group(s).
- By using the Block Matrix, map the “inrush detection” signal to individual protection functions. This configuration is valid for all setting groups.

During transformer inrush conditions, the second harmonic level may not be the same for all phases. So PowerLogic P5 protection relay calculates the ratio between the second harmonic component and the fundamental frequency component for each phase. When the ratio of the second harmonic component of any phase is higher than the ratio setting, after a fixed delay (20 ms), the inrush detection signal will be activated and the inrush current will be discriminated.

There are two operating modes for inrush detection which is configured via the "Inrush operating mode" setting. When it is in the "Phase block" mode, after inrush current is detected, it will block the related overcurrent function only in that phase (or phases); when it is in the "Cross block" mode, if any phase inrush current is detected, it will block the related overcurrent function in all 3 phases.

To avoid maloperation, the inrush detection is only active if the phase current is greater than a fixed minimum current of 10% Inom. Otherwise, the output of the inrush detection is reset. As additional constraint, a maximum threshold current is settable. Currents above this threshold will bypass any inrush blocking. This threshold is set based on the transformer reactance. This reactance will limit any inrush current, therefore currents greater than this are treated as short circuits.

Conversely, to secure proper operation during evolving faults or for faults fed from sources with high amount of harmonics, any established overcurrent protection starting will block the inrush blocking function.

A fixed reset delay (30 ms) of the "inrush detection" signal is implemented to avoid signal chattering and potential maloperation because of too fast unblocking the protection stages, especially at the end of the inrush condition.

The inrush blocking signal requires the presence of second harmonic current for 1 period (20 ms). Similarly the reset of this condition requires the absence of second harmonic component for 30 ms.

In transformer differential protection application P5T30 two stages of this inrush blocking function are available with common functionality. Each stage evaluates the currents from one end and determines inrush condition and its inrush blocking signals accordingly for its end. This allows selective use of these signals in the block matrix, namely to have a common link to one end from which currents are measured in the OC stage and in the inrush blocking function.

Block diagram

Figure 246 - Block diagram of inrush blocking

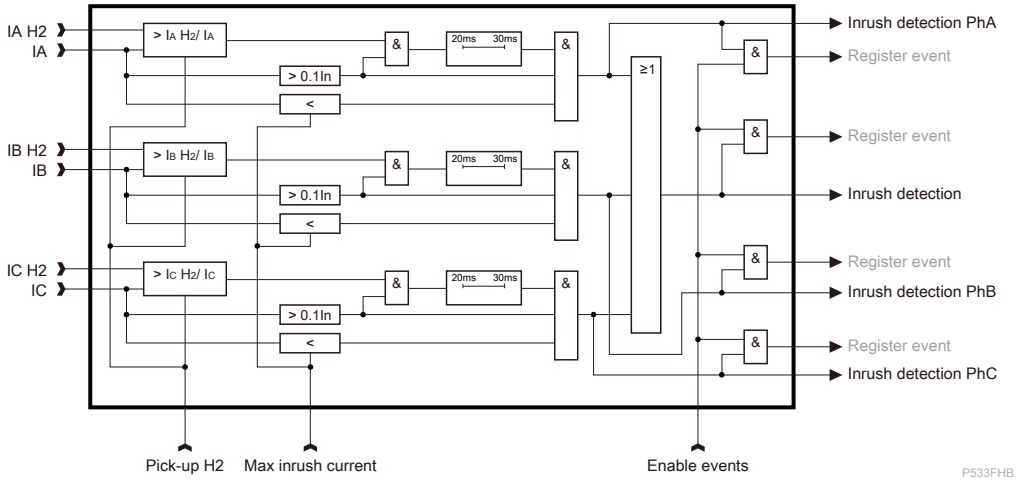

IX.H2	Second harmonic component of phase current
IX.fund	fundamental component of phase current

Characteristics

Table 84 - Settings and characteristics of the inrush blocking function

Settings/characteristics (description/label)	Values
Pick-up value/Pick-up H2	
Setting range	10%...35%
Resolution	1%
Accuracy	±1%
Hysteresis	1%
CT input selection[85]	
Setting range	CT-1 is fixed for stage 1, CT-2 is fixed for stage 2.
Max inrush current/CurBlkVal	
Setting range	1.00...20.00 pu[86]
Resolution	0.01 pu[86]
Accuracy	±3% or ±0.005 pu[86]
Inrush operating mode	Phase block; Cross block
Characteristic times	
Start time	< 40 ms
Setting group	
Number	1

85. Available for P5T30 only.
86. I_n = phase CT primary nominal

Switch On To Fault (ANSI 50HS)

Description

The switch-on-to-fault (SOTF) protection function (ANSI code 50HS) offers protection when the circuit breaker (CB) is closed on a faulty line. In this case a fast trip is required and instantaneous trip is inherently selective. Overcurrent-based protection does not clear the fault until the intended time delay has elapsed. SOTF gives a trip signal without additional time delay if the CB is closed and a fault is detected within a set time window after closing the CB.

Some faults may be caused by conditions not removed from the feeder after a reclosing cycle or a manual close, or due to earthing/grounding clamps left on after maintenance work.

The manual closing order from the circuit breaker may be initiated from one of several sources:

- Local close switch via digital inputs
- CB close command from local panel or eSetup Easergy Pro
- Remote communication

Operation

Switch-on-to-fault function operates within the SOTF active operation time, page 375 and Switch-on-to-fault function does not operate after the SOTF active operation time elapses, page 376 illustrate the operation of the SOTF function:

1. Switch-onto-fault gets not activated if the CB has not been in open position before the fault. Open CB detection is noticed from the highest phase current value which has to be under a fixed low threshold (0.02 x I_n). Opening of the CB can be detected also with digital inputs (Dead line detection input = DI1 – DIx, Fx, VI1 – VIx). In this case, digital input which is connected to 52a need to be configured to this "Dead line detection input". The default detection method is based on the current threshold, so the dead line detection input parameter has value “–“.
2. Dead line detection delay defines how long the CB has to be open so that the SOTF function gets active. If the set detection delay time is not elapsed when the highest phase current value (maximum of IA, IB, IC) rises over the start setting, the SOTF does not operate.
3. If the highest phase current value of IA, IB, IC goes successfully under the low limit and rises to a value between the low limit and the start value, then if the highest phase current value rises over the start setting value before the SOTF active operation time expires, the SOTF trips. If this SOTF active operation time is exceeded, the SOTF does not trip even if the start setting value is exceeded.

Figure 247 - Switch-on-to-fault function operates within the SOTF active operation time

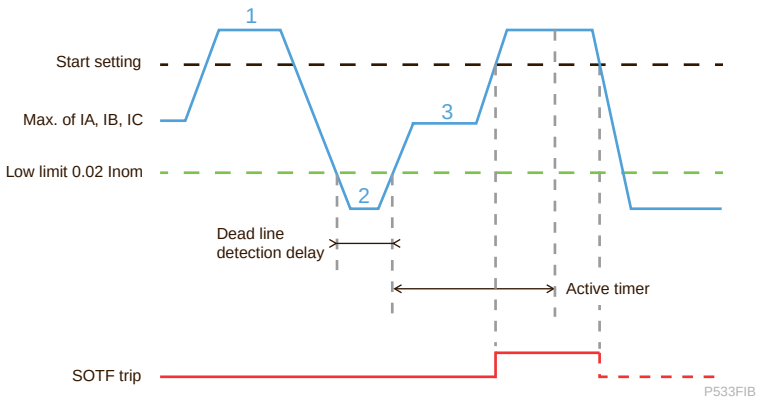

Figure 248 - Switch-on-to-fault function does not operate after the SOTF active operation time elapses

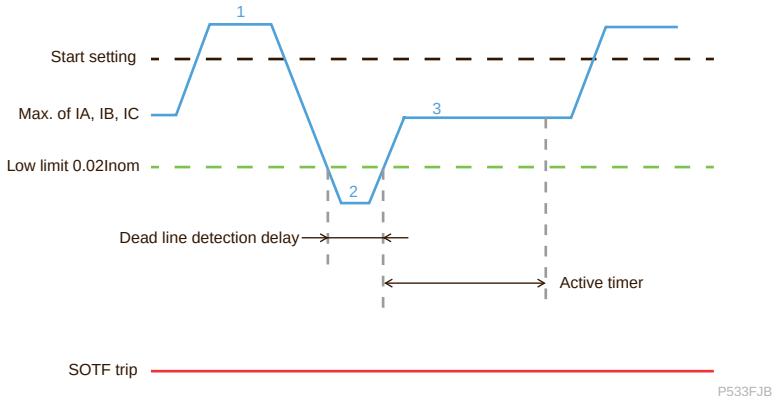

Block diagram

Figure 249 - Block diagram of the Switch On To Fault protection function (ANSI 50HS)

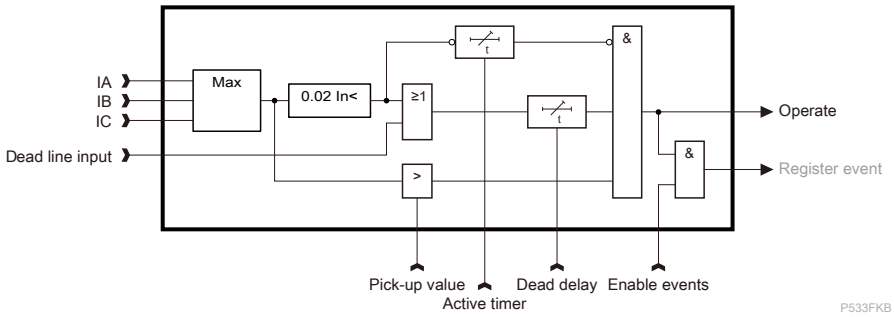

Characteristics

Table 85 - Settings and characteristics of the switch-on-to-fault protection function (ANSI 50HS)

Settings/characteristics (description/label)	Values
Pick-up value/SOTF	
Setting range	1.00...40.00 pu[87]
Resolution	0.01 pu[87]
Accuracy	±3%
Reset ratio	97% ±1%
Dead line detection delay/Dead delay	
Setting range	0.00...60.00 s
Resolution	0.01 s
SOTF active after CB closure/Act time	
Setting range	0.10...60.00 s
Resolution	0.01 s
Dead line detection input	

87. phase CT primary nominal

Table 85 - Settings and characteristics of the switch-on-to-fault protection function (ANSI 50HS) (Continued)

Settings/characteristics (description/label)	Values
Options	Selection of one digital input (DI), one virtual input (VI), or one function key.
Characteristic times	
Start time	< 30 ms (25 ms with high speed) when $I/I_{set} > 2$
Disengaging time	< 60 ms (75 ms with high speed)
Setting group	
Number	1

Non-directional/directional phase overcurrent protection (ANSI 50/51/67)

Description

The overcurrent protection function is used against short circuit faults and overloads. It provides three-phase and six-stage non-directional/directional overcurrent protection. All the six overcurrent stages can be selected to be either non-directional, forward or reverse. Further more, phase segregated start and trip signals are available for each overcurrent stage. All the six stages have the same settings and performance. Typical applications are:

- Short-circuit protection of two parallel cables or overhead lines in a radial network.
- Short-circuit protection of a looped network with a single feeding point.
- Short-circuit protection of a two-way feeder, which usually supplies loads but is used in special cases as an incoming feeder.

All 6 overcurrent stages are also available with transformer differential protection P5T30 as back-up protection. Each stage can be individually linked to the measured phase currents of one end. As no voltage measurement is available, these stages can operate in non-directional mode only, and also no voltage-controlled adjustment of operate threshold and time is available.

Phase directional element

The directional element get polarised by the quadrature phase-phase voltages, as shown in the table below:

Phase of protection	Operate current	Polarizing voltage phase rotation ABC	Polarizing voltage phase rotation ACB
A Phase	IA	VBC = VB - VC	VCB = VC - VB
B Phase	IB	VCA = VC - VA	VAC = VA - VC
C Phase	IC	VAB = VA - VB	VBA = VB - VA

The directional check is performed based on the following criteria:

Forward directional	-90° < (angle(I) - angle(V) - RCA) < 90°
Reverse directional	-90° > (angle(I) - angle(V) - RCA) > 90°

Where RCA = 90° - feeder impedance angle

Under system fault conditions, the fault current vector will lag its nominal phase voltage by an angle dependent upon the system X/R ratio. Therefore, the relay should operate with the maximum sensitivity for currents lying in this region. This is achieved by means of the Relay Characteristic Angle (RCA) setting. It defines the angle by which the current applied to the relay must be displaced from the voltage applied to the relay to obtain the maximum relay sensitivity. This is the "Characteristic angle" setting in the overcurrent menu. On the P5 relay, it is possible to set characteristic angles anywhere in the range –95° to +95°.

For a close-up three-phase fault, all three voltages will collapse to zero and no healthy phase voltages will be present. For this reason, the relay will store the pre-fault voltage information and continues to apply it to the directional overcurrent elements for a time period of 5 s under the circumstance. This feature ensures that either instantaneous or time delayed directional phase overcurrent elements will be allowed to operate, even with a three-phase voltage collapse. This function uses memorised voltages for calculation if the polarisation voltages drop below the minimum voltage threshold (0.015 pu[88]), in case of close-up three-phase fault. These memorised voltages will be used until at least one polarisation voltage

88. Vnom = VT primary nominal (PP) or Vnom/√3 = VT primary nominal (PN) depending on P5 voltage mode

is going above the minimum voltage threshold (0.015 pu[89]), or during a maximum time period of 5 s. If the input voltage loss continues longer than 5 s the directional overcurrent is blocked.

VTS blocking

Voltage Transformer Supervision (VTS) blocking only affects the directional overcurrent protection. When the “Direction mode” is selected as “Forward” or “Reverse”, the setting "VTS blocking" will show up. When "VTS blocking" is set to "Non-directional", the directional element will be ignored, and the directional overcurrent protection will be switched to non-directional protection under VT failure condition. When "VTS blocking " is set to "Blocked", the directional overcurrent protection will be blocked under VT failure condition.

Dynamic setting element

Dynamic mode allows the overcurrent protection settings dynamically adjusted during the transient period. It can be applied to cooperate between the Cold Load Pick-up, and also to realize voltage-controlled overcurrent.

When "Dynamic Mode" is ON and the digital input signal " DynamicInput" in Output Matrix is ON:

1. It will switch to the "Dynamic threshold" setting for fault detection.
2. For DT operating curve, it will switch to the "Dynamic operate delay" setting.
3. For IDMT, it will switch to the "Dynamic TMS" setting.

For Cold Load Pickup application, an output signal "CLP Operation" to indicate cold load energised condition will be available. In Output Matrix, "CLP Operation" will be linked to "DynamicInput" to realize this functionality.

Selective overcurrent logic

Selective overcurrent logic can be activated when the setting "SOL status" is set to "SOL1" or "SOL2" and the related digital input signal "SOLInputx" in Output Matrix is ON. For DT operating curve, it will switch to the setting "SOL operate delay" for logic discrimination. For IDMT curve, it will switch to the "SOL TMS" setting for logic discrimination.

The CLP and SOL functions have dynamic impacts on the overcurrent settings of timer and start value. The associated inputs could be activated at the same time. In this case, SOL takes precedence over CLP.

Inrush blocking

The user can block the overcurrent function by selecting the setting "Inrush blocking" of each stage. The purpose is to make the overcurrent function inoperative during the transformer energisation, otherwise a large primary current flow for a transient period will cause an unwanted trip.

It is highly possible that inrush blocking is determined later than the trip of instantaneous OC stage. Therefore, when the "Inrush blocking" setting is enabled in overcurrent stage, an additional delay (25 ms fixed) gets applied to wait for potential inrush blocking signal before start is ON.

To secure proper protection operation during evolving faults or for faults fed from sources with high amount of harmonics, a confirmed starting from any overcurrent protection stage will remove the inrush blocking from all overcurrent stages. This needs to be considered in the setup of inrush blocking: all OC stages, with operate threshold below the expected maximum inrush current have to be subjected to inrush blocking. Alternatively, use of the blocking matrix could be considered.

89. Vnom = VT primary nominal (PP) or Vnom/√3 = VT primary nominal (PN) depending on P5 voltage mode

For further details please also refer to the related application note.

Operating curve selection

The operating curve of the overcurrent protection can be selected to DT, standard dependent operate delay, and programmable dependent operate delay, for details refer to Dependent time and definite time operation, page 278.

When the “Operating Curve” is set to IDMT curve, the settings “DT adder” and “Minimum operate time” will show up. “DT adder” defines the additional time delay plus the IDMT timer (see DT adder setting impacts on IDMT operating curve, page 380). “Minimum operate time” defines the minimum operating time for IDMT curves to help ensure the IDMT stage will not trip faster than the DT stage when the fault current is very large (see Minimum operate time setting impacts on IDMT operating curve, page 380).

Figure 250 - DT adder setting impacts on IDMT operating curve

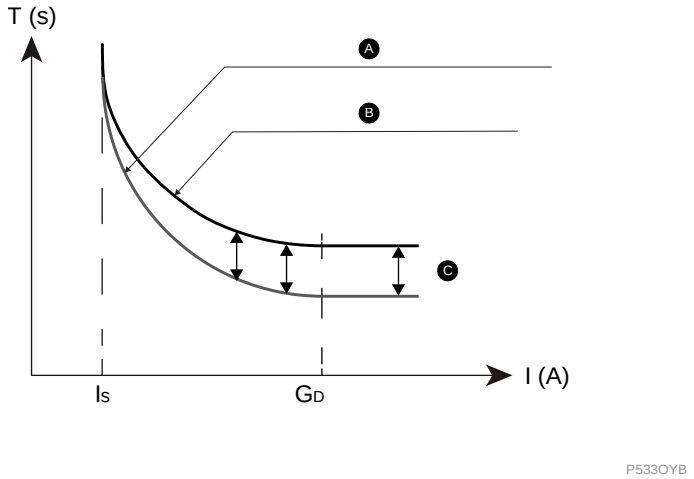

A	IDMT curve without DT adder	B	IDMT curve with DT adder
C	DT adder		

Figure 251 - Minimum operate time setting impacts on IDMT operating curve

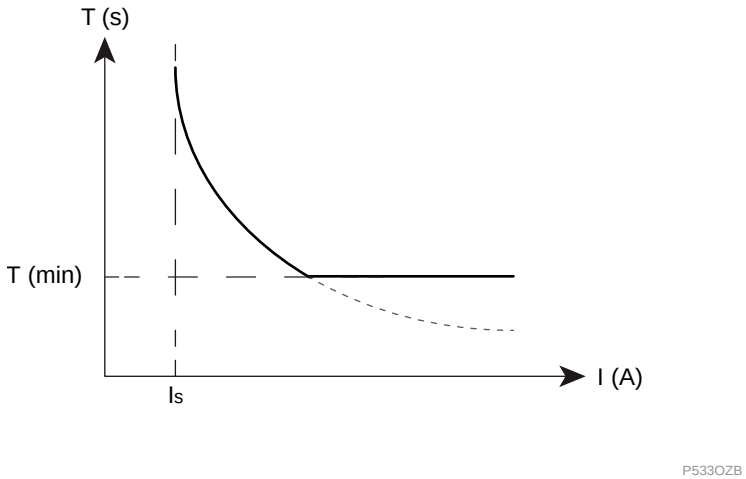

Tripping logic

When the “Tripping logic” is set to "1 out of 3" and any phase starts, the output of the "Trip Logic Check" is TRUE. That means tripping can be allowed at any

started phase. When the “Tripping logic” is set to "2 out of 3" and any two phases start, the output of the "Trip Logic Check" is TRUE. That means tripping can be allowed at the two started phases. The tripping logic is shown in following diagram.

Six independent stages

There are six separately adjustable stages: I>1, I>2, I>3, I>4, I>5, and I>6. All the six stages have the same settings and performance. All the stages have definite operate time (DT) and dependent operate time (IDMT).

Directional operation

Three modes are available: Non-directional, Forward and Reverse. In the Non-directional mode, the stage is acting just like an ordinary overcurrent protection function stage.

An example of directional overcurrent characteristic with the phase A fault is shown as below.

Figure 252 - Example of the directional overcurrent function characteristic

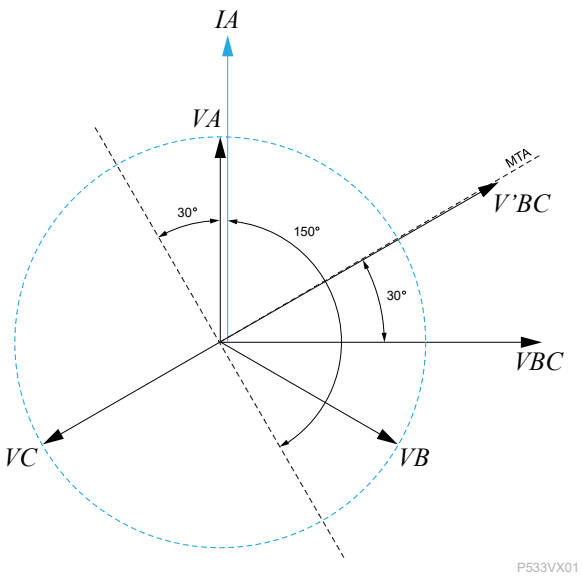

An example of bi-directional operation characteristic is shown as below. The RCA of the two stages are 0° and -180°.

Figure 253 - Bi-directional application with two stages

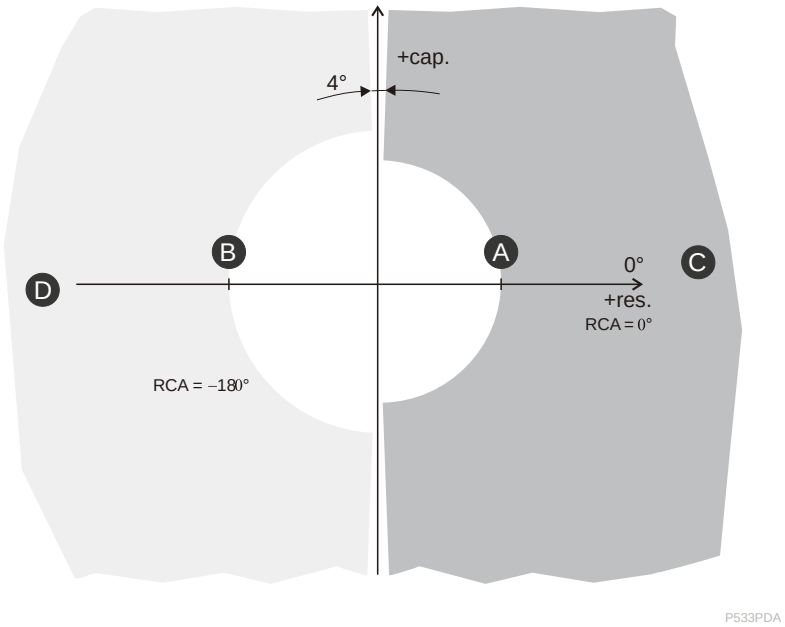

A	Directional overcurrent stage1 pickup value setting	B	Directional overcurrent stage2 pickup value setting
C	Directional overcurrent stage1 trip area	D	Directional overcurrent stage2 trip area

Tripping logic

When the setting "Tripping logic" is set to "1 out of 3", any of the three phase currents exceeds the setting value and, in directional mode (Forward or Reverse), the direction is located in the trip area, this stage starts and issues a start signal. If the fault situation is present longer than the operate time setting, a trip signal is issued.

Voltage-controlled overcurrent

Voltage-controlled overcurrent protection can be used as system back-up protection or as transformer back-up protection. Normally voltage-controlled overcurrent protection is preferred for the applications where a generator is directly connected to a busbar without a step-up transformer. It is recommended as well to use this solution to increase the sensitiveness of overcurrent back-up transformer protection. P5 relays provide a dynamic setting mode for each overcurrent protection stage, so that overcurrent pick-up setting and operate delay setting will be replaced by dynamic threshold and dynamic operate delay settings. So the overcurrent protection adjusts the current setting according to the detected undervoltage condition. The information about application and setting examples can be found in the Application Book.

High Impedance Busbar Differential Protection

The PowerLogic P5 overcurrent elements I> can be used for high impedance busbar protection based on the high impedance differential protection principle, offering stability for any type of fault occurring outside the protected zone and satisfactory operation speed for faults within the zone. For this application instantaneous operation is commonly applied, which can be obtained in a simple way by selecting definite time delay characteristic with minimum time delay setting. The information about application, calculations, setting examples and recommendations for resistors can be found in the Application Book.

Back-up mode

The back-up mode is for PowerLogic P5L30 only.

The negative sequence overcurrent protection, the non-directional/directional phase overcurrent protection and the non-directional/directional earth/ground fault overcurrent protection can be set as backup protections of the line differential protection in case the line differential protection is permanently blocked. By default, the overcurrent stages are active. Once the back-up mode is enabled, the overcurrent protections will be active only if the line differential protection is blocked, and when the line differential protection is not blocked or disabled, the overcurrent protections will be inactive again.

To enable/disable the back-up mode, check/uncheck the **Back-up mode** in eSetup Easergy Pro/ **PROTECTION**/**Negative sequence overcurrent 46** and **Phase overcurrent 50/51/67** and **Ground fault overcurrent 50N/51N/67N**.

Block diagram

Figure 254 - Block diagram of non-directional overcurrent protection function

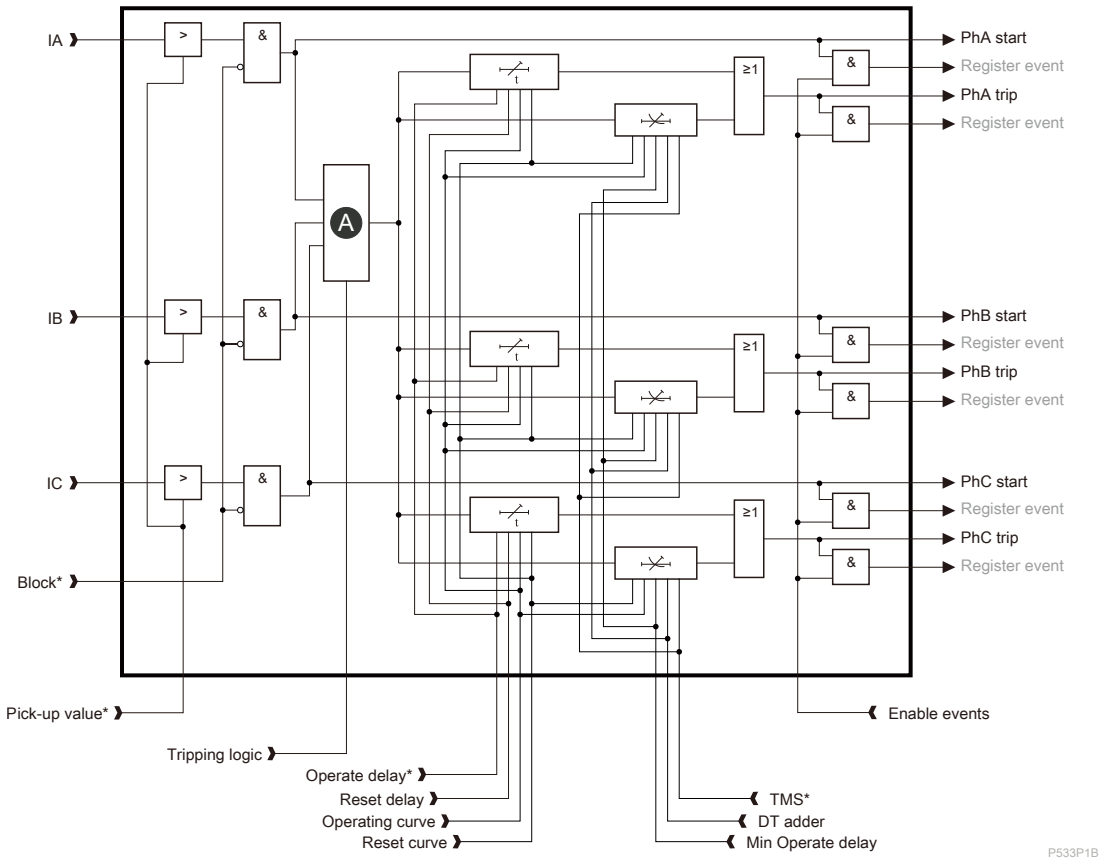

A	Tripping logic

NOTE:

- Block input can be signals configured via Block matrix, due to inrush condition detected.
- Pick-up value can be value from "Pick-up value" setting, "Dynamic threshold" setting depending on the configuration.
- Operate delay can be the value from "Operate delay" setting, "SOL operate delay" setting or "Dynamic operate delay" setting depending on the configuration.
- TMS value can be the value from "TMS" setting, "SOL TMS" setting or "Dynamic TMS" setting depending on the configuration.

Figure 255 - Block diagram of directional overcurrent protection function

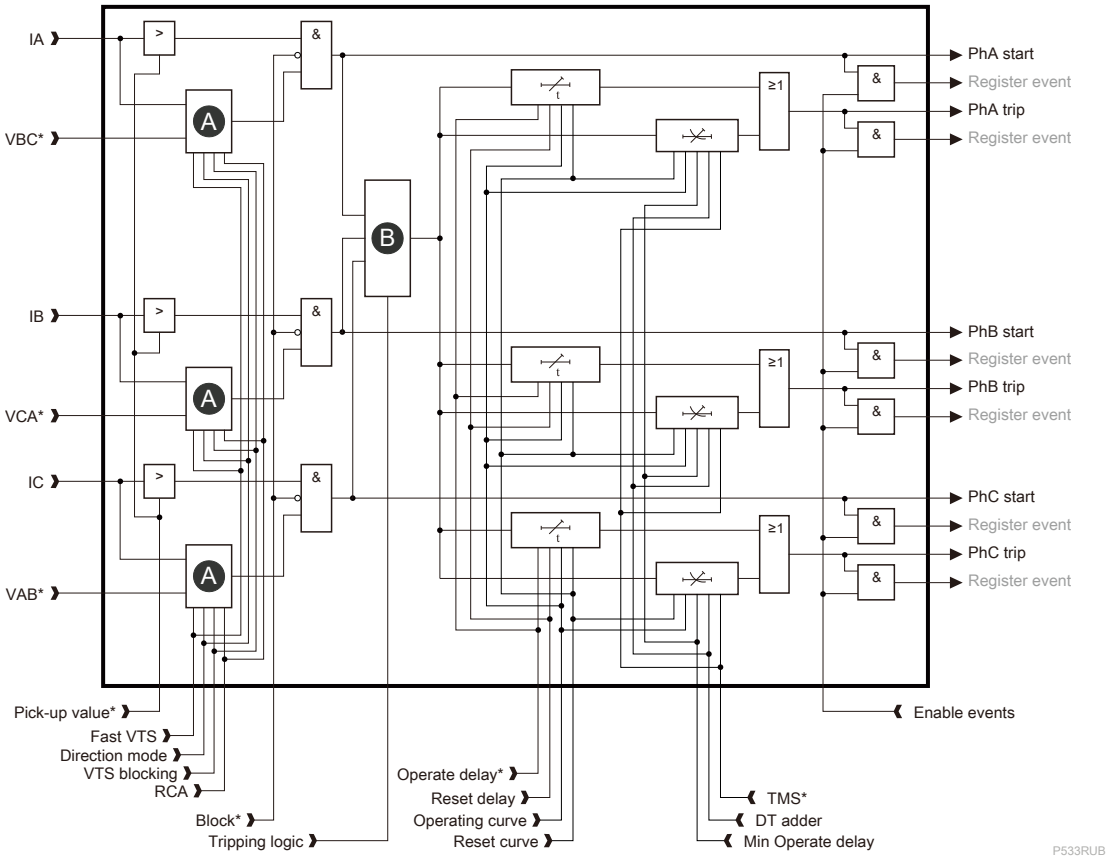

A	Direction check logic, for Forward direction, it should follow the equation: -90° < (angle(I) - angle(U) - RCA) < 90°, and for Reverse direction, it should follow the equation: -90° > (angle(I) - angle(U) - RCA) > 90°	B	Tripping logic

NOTE:

- Block input can be signals configured via Block matrix, due to inrush condition detected.
- Pick-up value can be value from "Pick-up value" setting, "Dynamic threshold" setting depending on the configuration.
- Operate delay can be the value from "Operate delay" setting, "SOL operate delay" setting or "Dynamic operate delay" setting depending on the configuration.
- TMS value can be the value from "TMS" setting, "SOL TMS" setting or "Dynamic TMS" setting depending on the configuration.
- VAB/VBC/VCA can be the calculated phase to phase voltage, or memory value for close-up three-phase fault.

Characteristics

Table 86 - Setting and characteristics of the non-directional/directional phase overcurrent protection (6 stages have the same settings)

Setting/characteristics (description/label)	Values
Pick-up value/I>1	
Setting range	0.05...40.00 pu[90] (DT) 0.05...5.00 pu[90] (IDMT)
Resolution	0.01 pu[90]
Accuracy	±2% or ±0.005 pu[90]
Reset ratio	95% ± 2%
CT input selection[91]	
Setting range	CT-1, CT-2
Back-up mode/Back-up mode[92]	
Options	Off/On
Operating Curve	
Options	DT; IEC: SI, VI, EI, LTI, UTI; IEEE: MI, VI, EI ANSI: NI, STI, LTI Others: UK_Rectifier, FR_STI, RI, STI_CO2, LTI_CO5, MI_CO7, NI_CO8, VI_CO9, EI_CO11, BPN Prg1-3
Accuracy	±5% or ±20 ms (for IDMT)
Operate delay/Operate delay	
Setting range	0.00...600.00 s
Resolution	0.01 s
Accuracy	±1% or ±10 ms
TMS/TMS	
Setting range	0.020...20.000
Resolution	0.001
DT adder/DT adder	
Setting range	0.00...1.00 s
Resolution	0.01 s
Minimum operate delay/Min operate delay	
Setting range	0.00...10.00 s
Resolution	0.01 s
Direction mode/Direction mode	
Options	Non-directional; Forward; Reverse
Characteristic angle/Char angle	
Setting range	-95° - +95°
Resolution	1°
Accuracy	±2°
VTS blocking	

90. Inom
91. Available for P5T30 only.
92. Available for P5L30 only.

Table 86 - Setting and characteristics of the non-directional/directional phase overcurrent protection (6 stages have the same settings) (Continued)

Setting/characteristics (description/label)	Values
Options	Blocked; Non-directional
Tripping logic/Tripping Logic	
Setting range	1 out of 3; 2 out of 3
Reset curve/Reset curve	
Options	DT; IDMT; Prg1-3
Reset delay/Reset delay	
Setting range	0.00...100.00 s
Resolution	0.01 s
Accuracy	±1% or ±30 ms
Inrush blocking/Inrush blocking	
Options	Off/On
SOL status/SOL status	
Options	Off; SOL1; SOL2
SOL operate delay/SOL operate delay	
Setting range	0.00...600.00 s
Resolution	0.01 s
Accuracy	±1% or ±10 ms
SOL TMS/SOL TMS	
Setting range	0.020...20.000
Resolution	0.001
Dynamic mode/Dynamic mode	
Options	Off/On
Dynamic threshold/Dyn pick-up value	
Setting range	0.05...40.00 pu[93] (DT) 0.05...5.00 pu[93] (IDMT)
Resolution	0.01 pu[93]
Accuracy	±2% or ±0.005 In
Dynamic operate delay/Dynamic op delay	
Setting range	0.00...600.00 s
Resolution	0.01 s
Accuracy	±1% or ±10 ms
Dynamic TMS/Dynamic TMS	
Setting range	0.020...20.000
Resolution	0.001
Back-up mode	
Enable back-up mode	Off/On
Voltage memory time	
Value	5 s fixed
Angle memory	
Value	5 s fixed

93. Inom

Table 86 - Setting and characteristics of the non-directional/directional phase overcurrent protection (6 stages have the same settings) (Continued)

Setting/characteristics (description/label)	Values
Minimum voltage for the direction determination	
Value	0.015 pu[94]
Characteristic times	
Start time	< 30 ms (25 ms with high speed) for currents at 2 x Is pick-up value (non-directional) < 35 ms (30 ms with high speed) for currents at 1,2 x Is pick-up value (non-directional)
	< 40 ms (35 ms with high speed) for currents at 2 x Is pick-up value (directional) < 40 ms (35 ms with high speed) for currents at 1,2 x Is pick-up value (directional)
Disengaging time	< 55 ms (70 ms with high speed)
Overshoot time	< 30 ms
Setting group	
Number	4

94. Vnom

Arc-flash (ANSI 50ARC)

DANGER

HAZARD OF ELECTRIC SHOCK, EXPLOSION, OR ARC FLASH

Information on this product is offered as a tool for conducting arc flash hazard analysis. It is intended for use only by qualified persons who are knowledgeable about power system studies, power distribution equipment, and equipment installation practices. It is not intended as a substitute for the engineering judgement and adequate review necessary for such activities.

Failure to follow these instructions will result in death or serious injury.

Description

The arc-flash protection function (ANSI code 50ARC) is a high speed protection function able to detect arcing events in a few millisecond, to minimise equipment damages.

The arc-flash protection contains 8 arc stages that can be used to trip the circuit breakers. Arc stages are activated with overcurrent and light signals (or light signals only). The allocation of light or "light + current confirmation" signal to arc stages is defined in arc-flash protection matrix: current, light and output matrix. The matrix are programmed via the dedicated arc-flash matrix menus. Available matrix signals depend on the model number (see Order information, page 652).

Available signal inputs for arc-flash protection depend on the PowerLogic P5 protection relay's configuration with 3 or 6 light inputs.

For PowerLogic P5x30 protection relay, arc sensor x (where x is the sensor number) alarm signal is used to indicate the health status of the arc sensor. These state signals are available in LED matrix, Output matrix, Block matrix and Object block matrix. All the signals are in Boolean type:

- when the arc sensor alarm signal is activated, it means the arc sensor is not in health state, such as: disconnection, short circuit, open circuit, not installed correctly, etc.
- when the arc sensor alarm signal is not activated, it means the arc sensor is in health state.

In transformer differential protection application P5T30 the current inputs of the arc-flash protection can be assigned to one of the 2 ends.

With 3 to 6 arc-flash input options, the PowerLogic P5x30 protection relay allows to build a multi-zone arc-flash protection system.

Information like arc detection or current detection can be exchanged across the system using two communication ways:

- GOOSE messages using the IEC 61850 protocol (preferred solution)
- Virtual outputs

Figure 256 - Application example of the arc-flash protection function

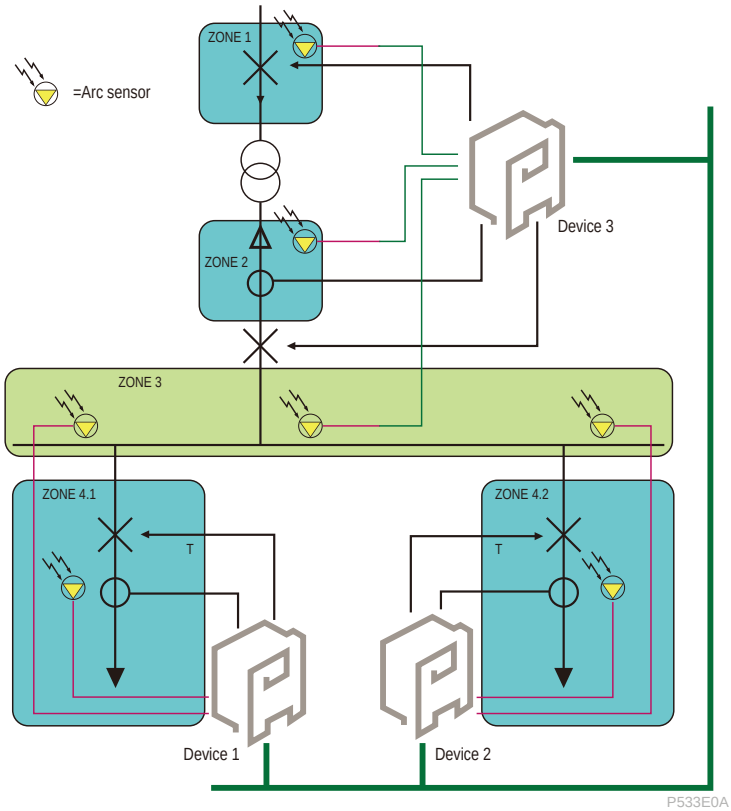

In this application example, the arc-flash sensor for zone 4.1 is connected to Device 1. If the arc-flash sensor detects the fault and simultaneously Device 3 sends a current signal, the zone 4.1 is isolated by the outgoing feeder breaker.

The arc-flash sensor for zone 4.2 is connected to the Device 2 and operates the same way.

The arc-flash sensors for zone 3 are connected to Device 1, 2 or 3. If a sensor detects the fault in zone 3, the light-only signal is transferred to Device 3 which also detects overcurrent and then trips the main circuit breaker.

An eventual arc-flash fault in zone 1 or 2 does not necessarily activate the current element in Device 3. However, arc detection can be achieved by using the light-only principle. If an arc-flash occurs in cable termination, zone 1 or zone 2, the fault is cleared by the upstream circuit breaker.

Each arc-flash protection stage provides:

- One arc detection function, which can be connected either to one of the available arc sensors (for local detection) or to a digital input or GOOSE information (for remote detection).
- One current detection function, which can be connected either to phase or earth/ground fault high-speed overcurrent (for local detection) or to a digital input or GOOSE information (for remote detection).
- One trip input to other relays

  The trip signal of arc-flash protection is not a part of the global trip. In this case it is convenient to use Goose which provides a fast signal to the other relay.

Earth/ground fault current can be only measured and detected, according to the PowerLogic P5 protection relay, from:

- 1/5A neutral CT input
- CSH/CSH30 neutral current input

Each stage of the arc-flash protection can be blocked individually by a control inputs such as digital input, virtual inputs and function keys.

Block diagram

Figure 257 - Block diagram of the arc-flash protection function

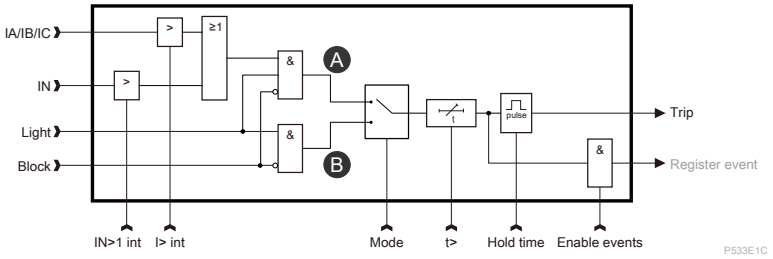

A	Light + Current	B	Light

Operation

Before configuring the arc flash protection, the arc sensors need to be installed through eSetup Easergy Pro.

The installation process is as follows:

1. In eSetup Easergy Pro, select **PROTECTION** menu/**ARC protection** sub-menu.
2. Under **Settings** view, click the “Install arc sensors” drop-down list and select Install.
3. Wait until the Installation state shows Ready.

   The installation of the sensors is now done.

The installed sensors and the sensor status can be viewed at the bottom of the ARC protection view.

This is an online process only. The installation process is only applicable when eSetup Easergy Pro is connected to aPowerLogic P5 protection relay. The offline configuration does not have this menu visible.

The arc-flash protection is implemented by configuration in the following three matrix (see **Matrix** menu in eSetup Easergy Pro):

- Arc matrix - current
- Arc matrix - light
- Arc matrix - output

The event configuration for the protection is done in the **Event enabling - ARC** view of the **Log** menu in eSetup Easergy Pro.

NOTE: When an arc-flash sensor is disconnected, an alarm message is automatically generated and displayed on the local panel.

Arc matrix – current

In the Arc matrix – current setting view, the available current signals (left column) are linked to the appropriate arc stages (1...8).

Figure 258 - View of Arc matrix – current

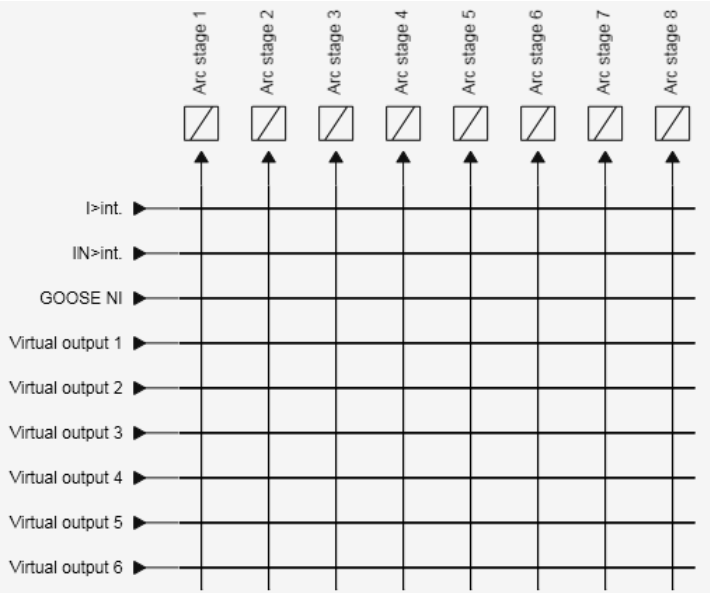

Table 87 - Arc matrix – current parameter group

Item	Range	Description
I>int.	On, Off	Phase IA, IB, IC internal overcurrent signal
67NI	On, Off	Earth/ground fault overcurrent signal
GOOSE NI	On, Off	Goose network input (IEC 61850)
Virtual output 1...20	On, Off	Virtual output
Arc stage 1...8	On, Off	Arc protection stage 1 to 8

Arc matrix – light

In the **Arc matrix – light** setting view, the available arc light signals (left column) are linked to the appropriate arc stages (1...8).

Figure 259 - View of Arc matrix – light

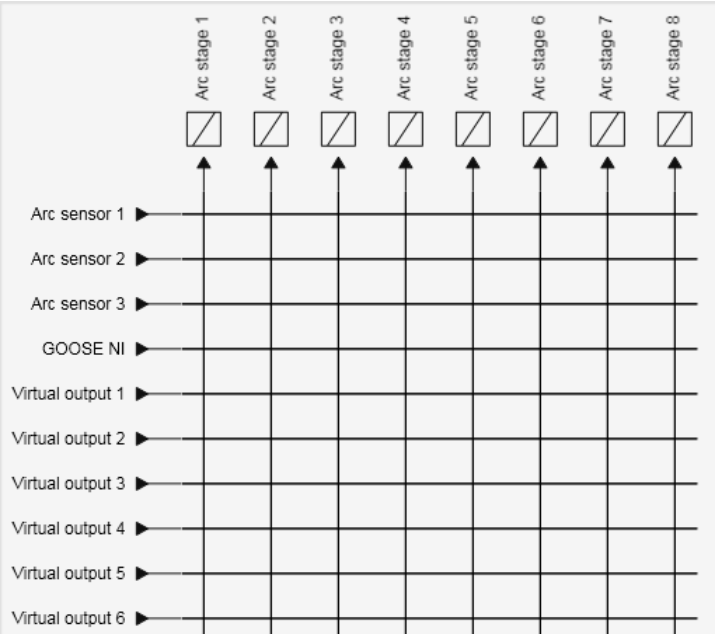

Table 88 - Arc matrix – light parameter group

Item	Range	Description
Arc sensor 1...6	On, Off	Internal arc-flash sensor 1 to 3 or 1 to 6, according to the configuration
GOOSE NI	On, Off	Goose network input
Virtual output 1...20		Virtual output
Arc stage 1...8	On, Off	Arc protection stage 1 to 8

Arc matrix – output

In the **Arc matrix – output** setting view, the used Arc stages (1...8) are connected to the required outputs. Possible latched function per output is also determined in this view. The available outputs depend on the model number.

NOTE: Arc matrix is the only way to configure arc stage signals to the output relay in PowerLogic P5, it is not configurable via standard Output matrix. But the configured signals will be reflected in the Output matrix.

Figure 260 - View of Arc matrix – output

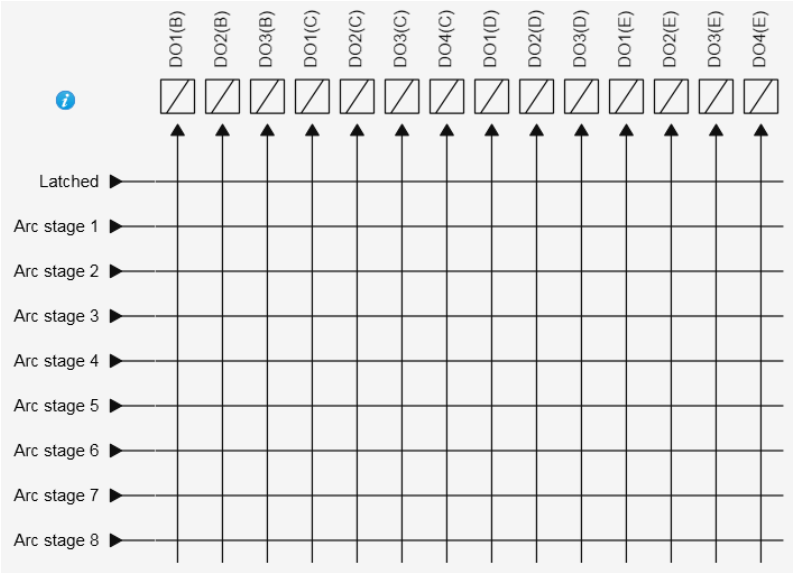

Table 89 - Arc matrix – output parameter group Setting Range

Setting	Range	Description
Latched	On, Off	Output latch
Arc stage 1...8	On, Off	Arc protection stage 1 to 8
Digital output	On, Off	DO1 to DO3 (slot B) or DO1 to DO4 (slots C, D, E) according to the PowerLogic P5 configuration

Event enabling matrix

This matrix is used to generate events when the current elements, light signals from the arc sensors, and the arc stages are activated or drop off.

Characteristics

DANGER

HAZARD OF ELECTRIC SHOCK, EXPLOSION OR ARC FLASH

Do not use the arc operation delay for primary trip.

Failure to follow these instructions will result in death or serious injury.

The arc operation delay is intended, with the separate arc stage, for the circuit breaker failure scheme only.

Table 90 - Setting and characteristics of the arc-flash protection function (ANSI 50ARC)

Setting/characteristics (description/label)	Values	
Stage Mode/Mode		
Options	Light; Light and I	
I>int. pick-up value/I>int		
Setting range	0.50...8.00 pu[95]	
Resolution	0.01pu[95]	
Accuracy	±2.5%	
CT input selection[96]		
Setting range	CT-1, CT-2	
IN>int. pick-up value/IN>int.		
Setting range	0.10...5.00 pu[95]	
Resolution	0.01pu[95]	
Accuracy	±2.5%	
DI to block stage		
Options	Selection of one digital input (DI), one virtual input (VI), or one function key (Fx).	
Operate delay/Delay		
Setting range	0...255 ms	
Accuracy	±1% or 20 ms	
Min. hold time (1~8)/Hold time		
Setting range	20...2500 ms	
Resolution	1 ms	
Accuracy	±1% or 20 ms	
Characteristic time		
Tripping time [97]		
Light only	2 ms minimum	4 ms maximum
Light + I> (earth fault) at 2xI>	5 ms minimum	11 ms maximum
Light + I> (phase fault) at 2xI>	4 ms minimum	7 ms maximum
Light by Goose + I> (earth fault)	5 ms minimum	11 ms maximum
Light by Goose + I> (phase fault)	4 ms minimum	10 ms maximum

95. I_{nom}
96. Available for P5T30 only.
97. With high speed high break contact relay (PowerLogic P5x30) only.

Table 90 - Setting and characteristics of the arc-flash protection function (ANSI 50ARC) (Continued)

Setting/characteristics (description/label)	Values	
Light + I> by Goose (earth fault)	7 ms minimum	16 ms maximum
Light + I> by Goose (phase fault)	5 ms minimum	12 ms maximum

Circuit breaker failure (ANSI 50BF)

Description

If a circuit breaker fails to open, following a tripping order (mainly detected by the non-extinction of the fault current), the circuit breaker failure protection function (ANSI code 50BF) sends a tripping order to the upstream or adjacent breakers.

With transformer differential protection P5T30 two CBF elements are available with a fix link to the measured currents of one end (CBF-1 to end 1, CBF-2 to end 2).

The circuit breaker failure protection has three types of inputs to operate:

- Current protection
- Non-current protection like frequency protections or voltage protections
- External trip

The circuit breaker failure protection incorporates two timers, CB Fail 1 Timer and CB Fail 2 Timer, allowing configuration for these scenarios:

- Simple CB failure protection, where only CB Fail 1 Timer is enabled. For any protection trip, the CB Fail 1 Timer is started, and normally reset when the circuit breaker opens to isolate the fault. If breaker opening is not detected, CB Fail 1 Timer times out and closes an output contact assigned to breaker fail (using the output matrix). This contact is used to backtrip upstream switchgear, generally tripping all infeeds connected to the same busbar section.
- A re-tripping scheme, plus delayed back-tripping. Here, CB Fail 1 Timer is used to route a trip to a second trip circuit of the same circuit breaker. This requires duplicated circuit breaker trip coils, and is known as re-tripping. Should re-tripping fail to open the circuit breaker, a back-trip may be issued following an additional time delay. The back-trip uses CB Fail 2 Timer, which is also started at the instant of the initial protection element trip.

CB failure protection elements CB Fail 1 Timer and CB Fail 2 Timer can be configured to operate for trips triggered by protection elements within the protection relay or via an external protection trip. The latter is achieved by allocating one of the digital inputs to External Trip selected with the "DI for external trip signal" parameter.

Resetting of the CB failure protection is possible from a breaker open indication (from the pole dead logic) or from a protection reset. In these cases, resetting is only allowed provided the undercurrent elements have also reset. The resetting options are summarised in this table:

Table 91 - CB fail timer reset mechanisms

Initiation	CB fail timer reset
Current based protection (linked to CBF_ITrp in Output matrix)	[IA<] & [IB<] & [IC<] & [IN<] according to PowerLogic P5 model
IN.sens based protection (fixed to IN>x (x = 1...6),when the IN>x input is set to IN.sens)	[IN.sens<] according to PowerLogic P5 model
Non-current based protection (linked to CBF_nITrp in Output matrix)	Three options are available: • Current protection reset only • Pole dead • Reset of the non-current protection
External protection (from DI selected in CBF settings)	Three options are available. • Current protection reset only • Pole dead • Reset when external trip signal disappears

Pole dead logic

The pole dead logic can be used to give an indication if one or more phases of the line are dead. A pole dead condition is determined by either monitoring the status of the circuit breaker auxiliary contacts or by measuring the line currents and voltages. If a "CB Open" signal is given the protection relay will automatically initiate a pole dead condition regardless of the current and voltage measurement. Similarly, if both the line current and voltage fall below a pre-set threshold the protection relay will also initiate a pole dead condition.

This is necessary so that a pole dead indication is still given even when an upstream circuit breaker is opened. The undervoltage (V<) and undercurrent (I<) thresholds have the following, fixed, pickup and drop-off levels as shown in Pole dead logic, page 396.

If the VT fails a signal is taken from the VTS logic to block the pole dead indications that would be generated by the under-voltage and under-current thresholds. However, the VTS logic will not block the pole dead indications if they are initiated by a "CB Open" signal. The object for used CB is directly set in the **Objects** view of the **Control** menu in eSetup Easergy Pro.

Figure 261 - Pole dead logic

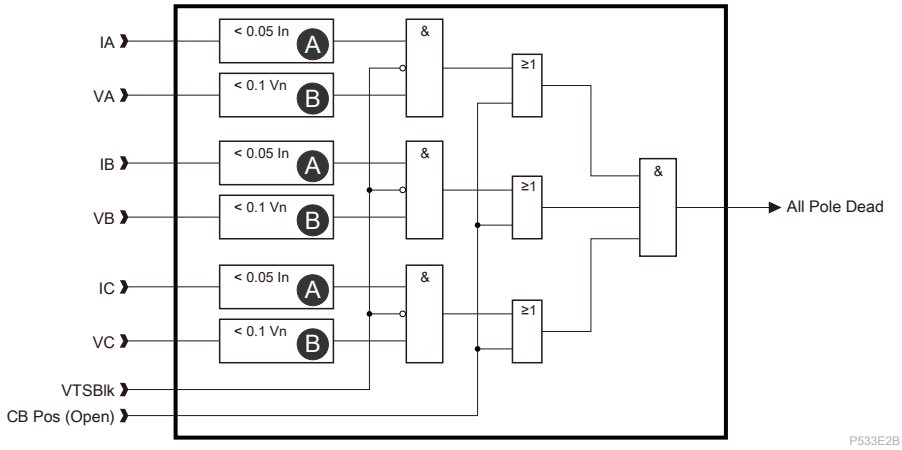

A	Drop off 0.055 In
B	Drop off 0.3 Vn

NOTE: For PowerLogic P5U20 and P5T30, undervoltage detection logic is ignored. For PowerLogic P5V20, only CB position is used to check pole dead, undercurrent and undervoltage logic are disabled.

Matrix use

This function can be blocked by the blocking matrix.

To activate the circuit breaker failure function with current protection trip or with non-current protection trip, it is required to connect the relevant signals in Output matrix. These are the CBF_ITrp signal or CBF_nITrp signal respectively.

The digital inputs used for the external trip signal as well as for external reset signal are directly set in the breaker failure function.

Block diagram

Figure 262 - Block diagram of the circuit breaker failure protection function

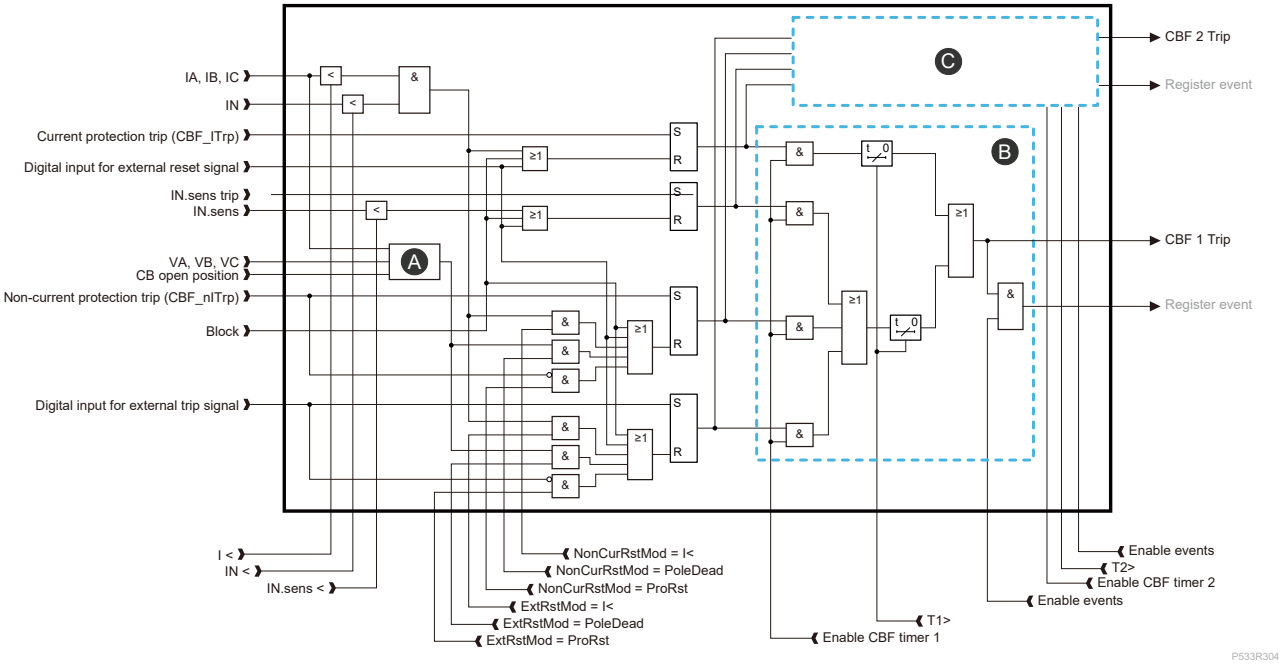

A	Pole Dead Detection	B	CBF 1
C	CBF 2 (same diagram as CBF 1)		

NOTE: The IN.sens trip is the signal of IN> protection trip when the input of IN> is set to IN.sens.

Characteristics

Table 92 - Settings and characteristics of the breaker failure protection function (ANSI 50BF)

Settings/characteristics (description/label)	Values
I< current set/I<	
Setting range	0.02...4.00 pu
Resolution	0.01 pu
CT input selection[98]	
Setting range	CT-1 is fixed for stage 1, CT-2 is fixed for stage 2.
IN< current set/IN<	
Setting range	0.050...4.000 pu[99] for IN measured by CSH; 0.020...4.000 pu[99] for IN measured by standard earth/ground fault CT 0.020...4.000 pu[99] for IN measured by standard earth/ground fault CT (for CSH30 use)
Resolution	0.001
IN.sens< current set/IN.sens<	
Setting range	0.002...0.800 pu[99] for sensitive earth/ground fault

98. Available for P5T30 only.
99. Inom for IN.calc; IN.nom for IN.meas; IN.CSH.nom for IN.CSH

Table 92 - Settings and characteristics of the breaker failure protection function (ANSI 50BF) (Continued)

Settings/characteristics (description/label)	Values
Resolution	0.001 pu[100]
Timer1 operate delay/T1 operate delay	
Setting range	0.00...50.00 s
Resolution	0.01 s
Accuracy	±1% or ±20 ms
Timer2 operate delay/T2 operate delay	
Setting range	0.00...50.00 s
Resolution	0.01 s
Accuracy	±1% or ±20 ms
Noncurrent CBF reset mode	
Options	I<only; PoleDead; ProtRst
Ext. CBF reset mode	
Options	I<only; PoleDead; ProtRst
DI for external trip signal	
Options	Selection of one digital input DI, one virtual input VI, or one function key
DI for external reset signal	
Options	Selection of one digital input DI, one virtual input VI, or one function key
Characteristic times	
Reset time[101]	< 30 ms for any trip initiate, reset by I<; < 30 ms for any trip initiate, reset by IN<; < 50 ms for non-current protection initiate, reset by Pole Dead[102]
Setting group	
Number	1

100. Inom for IN.calc; IN.nom for IN.meas; IN.CSH.nom for IN.CSH
101. Does not take into account any contact relay
102. Considering by default, 10 ms of debounce time filter on digital inputs.

Capacitor bank unbalance (ANSI 51C)

Description

The capacitor bank unbalance protection function (ANSI code 51C) detects unbalance current flowing between the neutral points of a double-star connected capacitor, filter and reactor bank. The typical connection for capacitor bank unbalance protection is shown in Typical capacitor bank protection application with the PowerLogic P5 protection relay, page 399. The unbalance current is measured with a dedicated current transformer (Standard earth/ground fault CT, or CSH core balance CT) between two star-points of the bank.

Under healthy conditions any standing unbalance current caused by small differences in each side of the banks is limited and it can be compensated as described in the following section. When there are failures within one capacitor unit, the unbalance current will increase, depending on the number of failed capacitor elements.

Figure 263 - Typical capacitor bank protection application with the PowerLogic P5 protection relay

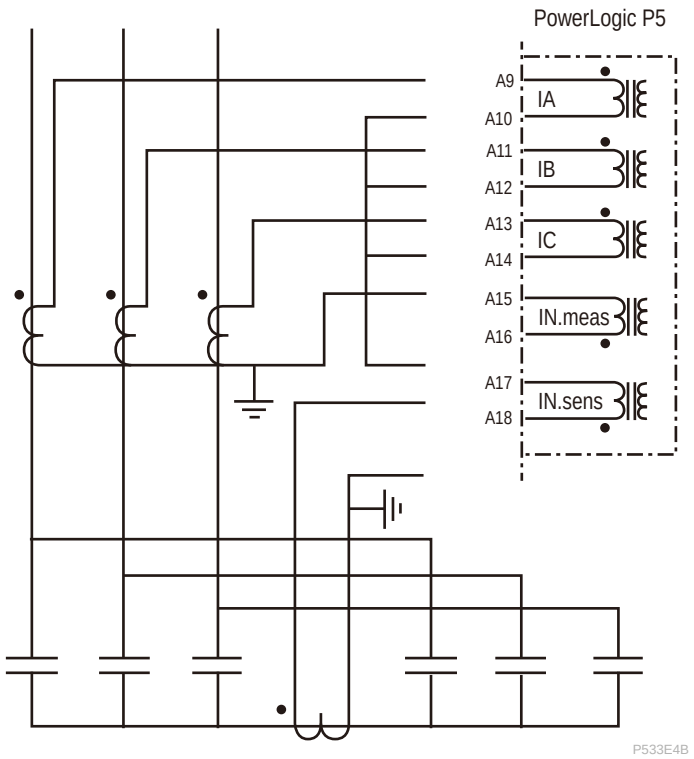

Normally, stage 1 is applied as the trip stage and stage 2 is applied as the alarm stage. As well as current input IN , the phase current IA is used to polarise the capacitor bank unbalance current for the standing unbalance current compensation and the faulty phase location.

Compensation method

The unbalance current under normal conditions can be compensated to get better protection sensitivity. There are two compensation modes, Normal mode and Location mode. Stage 1 can only select Normal mode. Stage 2 can select Normal mode or Location mode.

Normal mode

The compensation is performed manually during commissioning. Using eSetup Easergy Pro (**PROTECTION** menu/**Capacitor unbalance I_{cap}>1** sub-menu/**I_{cap}>1 unbalance** view) or relay HMI, the relay can get the standing unbalance current vector (here, IA is the angle reference) and record the magnitude and angle. For flexible compensation purpose, the magnitude of the standing unbalance current to be compensated is user settable under Normal Mode (setting SetBal), while the angle of the standing unbalance current is not settable, fixed as the recorded angle during commissioning.

Figure 264 - Capacitor unbalance protection with Normal compensation method

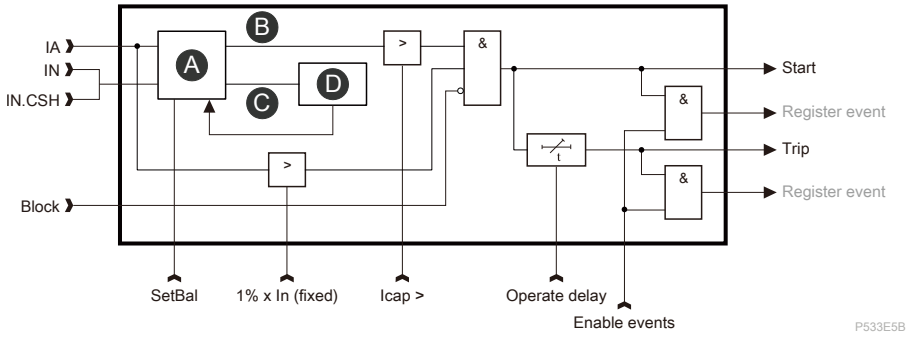

A	Compensation value: IN.compensate = IN - IN.cmp	B	Mag(IN.compensate)
C	Angle(IN) - Angle(IA)	D	Recorded IN angle