# Location mode

As in the Normal mode, the initial standing unbalance current vector (magnitude, angle referred to IA) can be recorded during commissioning. The magnitude of the standing unbalance current to be compensated is not user settable, but the automatic compensation feature is provided. In Location Mode the branch of each faulty element can be estimated and thus improve the fault finding and maintainability of the capacitor bank.

### Sensitive Setting

The stage $I_{cap}$>2 Pick up value should be set based on the calculated unbalance current change of one faulty element. The calculation can use the following formula:

$$3I_N = \frac{\dfrac{V_{P\text{-}N}}{(2\cdot\pi\cdot f\cdot C_1)^{-1}} - \dfrac{V_{P\text{-}N}}{(2\cdot\pi\cdot f\cdot C_2)^{-1}}}{3}$$

P533E6B

C1 = Capacitor unit capacitance (µF)

C2 = Capacitor unit capacitance, after one element fails (µF)

The entered setting should be smaller than the calculated value. As a rule of thumb 90% of the calculated unbalance current under one capacitor element faulty is recommend as the current setting.

### Counter Calculation

If there is an element failure in the bank, the relay checks the phase angle of the unbalance current (referred to IA). Based on this angle, the protection relay can detect the location of the faulty element and increase the corresponding counter with the calculated faulty elements number. For a double-star connected capacitor bank, there are a total of six counters to indicate six options for the location of the faulty element, as shown in How a failure in different branches of the bank affects the IN measurement, page 401.

The current setting is based on the unbalance current with one faulty capacitor element, and the setting Max Allowed Faults is provided to specify how many faulty capacitor elements are allowed without the relay operating. The faulty element number can be calculated as follows:

N = compensated IN magnitude / IN setting

**Figure 265 - How a failure in different branches of the bank affects the IN measurement**

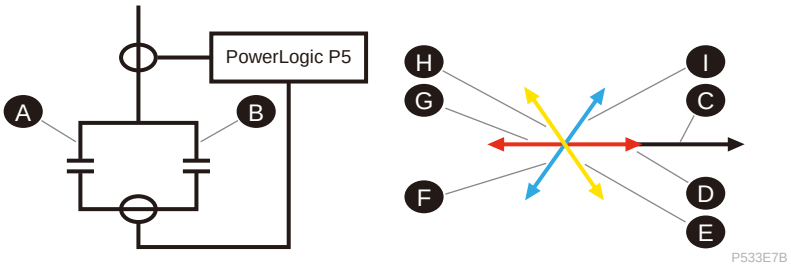


| | | | |
|---|---|---|---|
| A | Branch 1 | F | Phase 2 fault in branch 1 |
| B | Branch 2 | G | Phase 1 fault in branch 2 |
| C | IA as reference | H | Phase 3 fault in branch 1 |
| D | Phase 1 fault in branch 1 | I | Phase 2 fault in branch 2 |
| E | Phase 3 fault in branch 2 | | |

### Automatic Compensation

The operation time setting for stage $I_{cap}$>2 specifies how long the relay must wait until it is certain that there is a faulty element in the bank. After this time has elapsed, the corresponding counter will contain the number of faults. If none of the six counters reach the setting Max Allowed Faults, the stage $I_{cap}$>2 makes a new compensation automatically and the compensated unbalance current for this stage is now zero. The $I_{cap}$>2 stage will reset and be sensitive to a new faulty element. Note the counters are not reset by this action and will continue to accumulate any further faulty elements. As shown in Automatic compensation under location mode, page 402, the current vector A is the initial recorded standing unbalance current and the current vector B is the unbalance current with the faulty capacitor elements. The new compensation current is “vector B – vector A”. If one of the six counters reach the setting Max Allowed Faults, stage $I_{cap}$>2 will operate and the compensation current vector is recovered to the initial recorded standing unbalance current vector A.

Note, the automatic compensation does not affect the measured unbalance current of stage $I_{cap}$>1.

**Figure 266 - Automatic compensation under location mode**

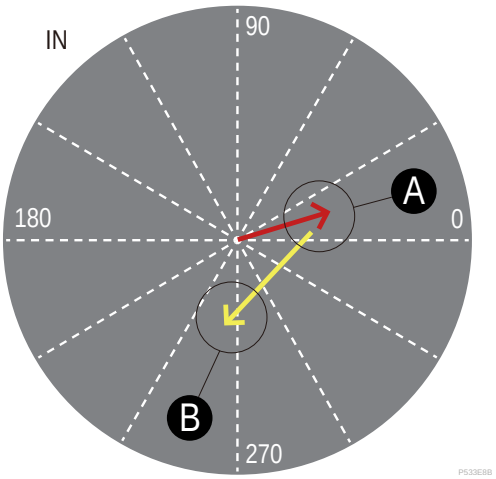


**Figure 267 - Capacitor unbalance protection with Location compensation mode**

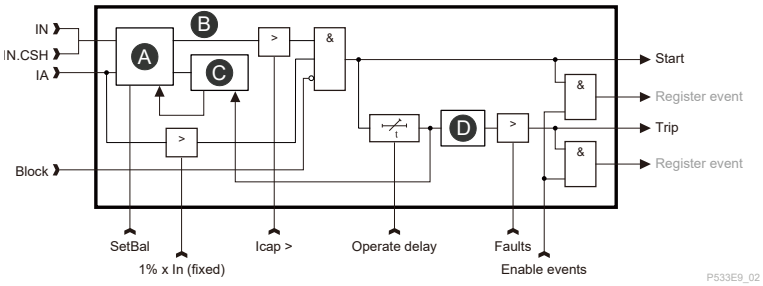


| | | | |
|---|---|---|---|
| A | Compensation value: IN.compensate = IN - IN.cmp | B | Mag(IN.compensate) |
| C | Recorded IN | D | Counter calculation |

# Characteristics

**Table 93 - Settings and characteristics of the capacitor bank unbalance protection stage (ANSI 51C)**

| Settings/characteristics (description/label) | Values |
|---|---|
| **IN input/Input** | |
| Options | IN.CSH , IN.calc, IN.meas |
| **Pick-up setting/Pick-up setting** | |
| Setting range | 0.02...20.00 pu[103] for IN measured with standard EF CT;<br>0.02...10.00 pu[103] for IN measured with standard EF CT (for CSH30 use);<br>0.05...20.00 pu[103] for IN measured with CSH; |
| Resolution | 0.01 pu |
| Accuracy | ±3% or ±0.002 pu for IN measured with standard EF CT;<br>±3% or ±0.002 pu for IN measured with standard EF CT (for CSH30 use);<br>±3% or ±0.005 pu for IN measured with CSH; |
| Reset ratio | 95% ± 3% |
| Transient overreach | < 10% with X/R up to 120 |
| **Operate delay/Operate delay** | |
| Setting range | 0.00...300.00 s |
| Resolution | 0.01 s |
| Accuracy | ±1% or ±20 ms |
| **Compensation Mode** | |
| Options | Off; Normal; Location |
| **Compensation Current (only available under Normal Compensation Mode)** | |
| Setting range | 0.010...3.000 pu[104] |
| Resolution | 0.001 pu |
| **Max Allowed Faults (only available under Location Compensation Mode)** | |
| Setting range | 0...10 |
| **Characteristic times** | |
| Start time | < 40 ms (35 ms with high speed) |
| Overshoot time | < 40 ms |
| Disengaging time | < 95 ms (110 ms with high speed) |
| **Setting group** | |
| Number | 4 |

103. PU is the per unit value based on Inom = phase CT primary nominal (IN.calc) or IN.nom = standard neutral CT primary nominal (IN.meas) or IN.CSH.nom = CSH CT primary nominal (IN.CSH) or IN.sens.nom = sensitive neutral CT primary nominal (IN.sens)
104. PU is the per unit value based on Inom = phase CT primary nominal (IN.calc) or IN.nom = standard neutral CT primary nominal (IN.meas) or IN.CSH.nom = CSH CT primary nominal (IN.CSH) or IN.sens.nom = sensitive neutral CT primary nominal (IN.sens)

# Overvoltage (ANSI 59)

## Description

The Overvoltage protection function (ANSI code 59) is used to detect system voltages that are too high or to check that there is sufficient voltage to authorise a source transfer.

The Overvoltage function provides the selection of phase to phase voltage or phase to ground voltage. Whenever any of these voltages exceeds the pickup value setting of a particular stage, this stage starts and a start signal is issued. If the fault situation remains on longer than the operate time setting, a trip signal is issued.

This function operates with either the definite time delay or inverse time delay characteristic or programmable curves. The inverse time delay characteristic follows the equation below:

$$t(G) = \frac{T}{(\frac{G}{G_S})-1}$$

P533OUB

where:

- t(G) is the theoretical operate time in seconds with constant value of G.
- T is the time delay setting (theoretical operate time for G = 2Gs).
- G is the measured value of the characteristic quantity.
- Gs is the setting value.

## Reset delay

The reset delay of V> stage is configurable, it enables the detection of intermittent faults. The time counter of the protection function does not reset immediately after the fault is cleared, but resets after the release delay has elapsed. If the fault appears again before the release delay time has elapsed, the delay counter continues from the previous value. This means that the function eventually trips if faults are occurring often enough.

There are three delay types for select: DT, IDMT, or Prg 1-3. For the detail of Prg 1-3, please refer to Programmable dependent time curves, page 282.

## Operate mode

The setting "Tripping logic" is available to configure the operate mode. When "Tripping logic" is "Any phase", the general trip signal "V> trip" is raised when any phase operates. When "Tripping logic" is "Three phases", the signal "V> trip" is raised only when all three phases operate.

## Three independent stages

There are three separately adjustable stages. All these stages have the same settings and performance.

# Block diagram

**Figure 268 - Block diagram of the Overvoltage protection function (ANSI 59)**

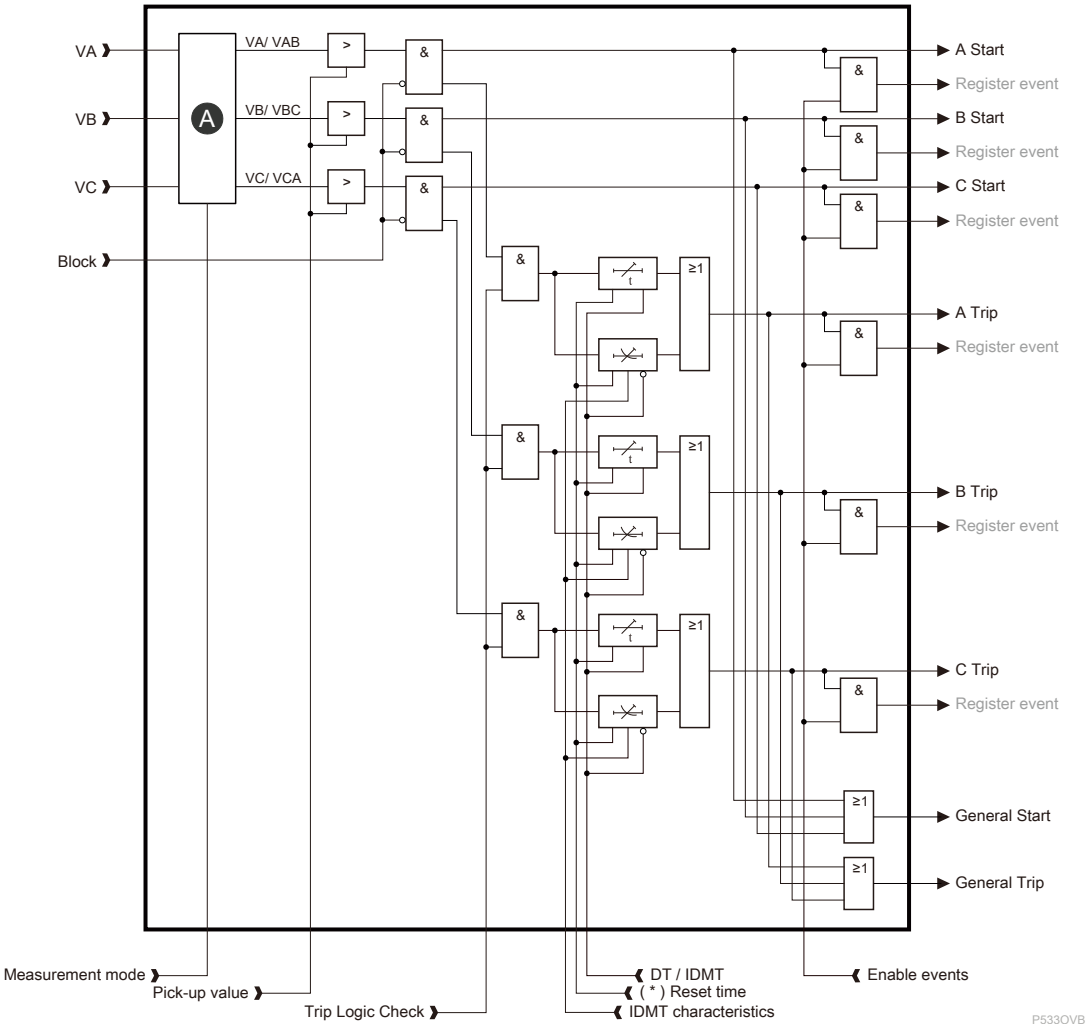


| | |
|---|---|
| A | Select setting |

For the block diagram of the Tripping Logic, refer to Block diagram of the Tripping Logic, page 312.

# Characteristics

**Table 94 - Settings and characteristics of the Overvoltage protection (ANSI 59)**

| Settings/characteristics (description/label) | Values |
|---|---|
| **Enable V>** | |
| Options | Off/On |
| **Pick-up value/V>** | |
| Setting range | 0.020...1.500 pu[105] |

105. Vnom = VT primary nominal (PP) or Vnom/√3 = VT primary nominal (PN) depending on measurement mode parameter setting

**Table 94 - Settings and characteristics of the Overvoltage protection (ANSI 59) (Continued)**

| Settings/characteristics (description/label) | Values |
|---|---|
| Resolution | 0.001 pu[106] |
| Accuracy | ±2% or ±0.05 V secondary |
| **Measurement mode/MeasMode** | |
| Options | Phase-Phase; Phase-Ground |
| **Delay type/Type** | |
| Options | DT; IDMT; Prg 1-3 |
| **Tripping logic/Triplogic** | |
| Options | Any Phase; Three Phases |
| **Operate delay/Operate delay** | |
| Setting range | 0.00...600.00 s |
| Resolution | 0.01 s |
| Accuracy | DT: ±1% or ±10 ms |
| | IDMT: ±5% or ±20 ms |
| **Reset time/Reset time** | |
| Setting range | 0.00...100.00 s |
| Resolution | 0.01 s |
| Accuracy | DT: ±5% or ±30 ms |
| **Hysteresis** | |
| Setting range | 1.0%...5.0% |
| Resolution | 1.0% |
| **Characteristic times** | |
| Start time | < 40 ms (35 ms with high speed) |
| Overshoot time | < 40 ms |
| Disengaging time | < 55 ms (70 ms with high speed) |
| **Setting group/SetGrp** | |
| Number | 4 |

106. Vnom = VT primary nominal (PP) Vnom/√3 = VT primary nominal (PN)

# Neutral overvoltage (ANSI 59N)

## Description

The neutral overvoltage protection function (ANSI code 59N) is used as non-selective backup for earth/ground faults and also for selective earth/ground fault protection for motors having a unit transformer between the motor and the busbar.

This function is sensitive to the fundamental frequency component of the neutral displacement voltage. The attenuation of the third harmonic is more than 60 dB because third harmonics are present between the neutral point and earth/ground even when there is no earth/ground fault.

Whenever the neutral voltage VN exceeds the start setting of a particular stage, this stage issues a start signal. If the fault situation is present longer than the operate time setting, a trip signal is issued.

## Measuring the neutral overvoltage

The neutral displacement voltage is either measured with a single voltage transformer between the motor's neutral point and earth/ground or calculated from the measured phase to neutral voltages according to the selected voltage measurement mode (see Voltages, page 502):

- When the voltage measurement mode contains "+VN": The neutral displacement voltage is measured with voltage transformer(s), for example using a broken delta connection such as 3VP+VN, 2VPP+VN and 2VPP+VN+VPPy, the measured neutral voltage exists. In this scenario, user can select:
  - in secondary volts,

    $$VN_{sec.meas}\,[V]$$

  - as per unit value,

    $$VN\,[p.u.] = \frac{VN_{sec.meas}\,[V] \cdot VN_{prim.nom}\,[V]}{\sqrt{3} \cdot VN_{sec.nom}\,[V] \cdot V_{prim.nom}\,[V]}$$

  - in primary kilovolts,

    $$VN_{prim.meas}\,[kV] = \frac{VN_{sec.meas}\,[V]}{VN_{sec.nom}\,[V]} \times VN_{prim.nom}\,[kV]$$

- When the voltage measurement mode is 3VP: The neutral displacement voltage is calculated from the phase voltages and therefore no separate neutral displacement voltage transformer is needed. The calculated neutral voltage exists:
  - in secondary volts,

    $$VN_{sec.calc}\,[V] = (VA_{sec.meas} + VB_{sec.meas} + VC_{sec.meas})\,[V]$$

  - as per unit value,

    $$VN\,[p.u.] = \frac{VN_{sec.calc}\,[V]}{\sqrt{3} \cdot V_{sec.nom}\,[V]}$$

  - in primary kilovolts,

    $$VN\,[kV] = \frac{VN_{sec.calc}\,[V]}{V_{sec.nom}\,[V]} \times V_{prim.nom}\,[kV]$$

- When the “Voltage measurement mode” is VPP/VPPy, the neutral voltage displacement feature is not applicable, as the calculated neutral voltage is not reliable.

## Three independent stages

There are three separately adjustable stages: VN>1, VN>2 and VN>3. All stages operate with definite time (DT) operation characteristics.

# Block diagram

The neutral overvoltage protection function (ANSI code 59N) is used as non-selective backup for earth/ground faults also for selective earth/ground fault protection for motors having a unit transformer between the motor and the busbar.

This function is sensitive to the fundamental frequency component of the neutral voltage. Whenever the selected neutral voltage value, measured or calculated, exceeds the pick-up setting of a particular stage, this stage starts and issues a start signal. If the fault situation is present longer than the operate time delay setting, a trip signal is issued.

**Figure 269 - Block diagram of the neutral voltage displacement protection function**

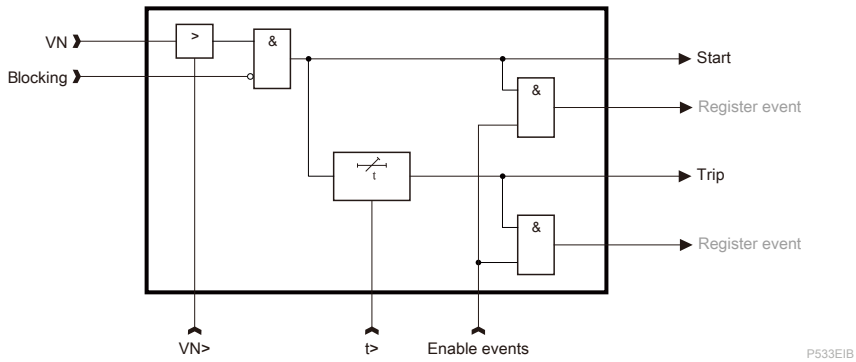


# Characteristics

Visibility of VT setting sections and VN setting sections depends on the fitted VTs (and the selected measurement mode). The setting range will be updated as required in the table below.

**Table 95 - Settings and characteristics of the neutral overvoltage protection function**

| Settings/characteristics (description/label) | Values |
|---|---|
| **Pick-up value** | |
| Setting range | 0.02...1.50 pu[107] |
| Resolution | 0.01 pu[107] |
| Accuracy | ±2% or ± 0.005 pu[107] |
| Reset ratio | 97% ± 2% |
| **Operate delay** | |
| Setting range | 0.00...300.00 s |
| Resolution | 0.01 s |
| Accuracy | ±1% or ±10 ms |
| **Reset time** | |
| Setting range | 0.00...300.00 s |

107. √3 x Vnom

**Table 95 - Settings and characteristics of the neutral overvoltage protection function (Continued)**

| Settings/characteristics (description/label) | Values |
|---|---|
| Resolution | 0.01 s |
| Accuracy | ±1% or ±30 ms |
| **Characteristic times** | |
| Start time | < 50 ms (45 ms with high speed) |
| Overshoot time | < 40 ms |
| Disengaging time | < 55 ms (70 ms with high speed) |
| **Setting groups** | |
| Number | 4 |
| **Evaluation VN** | |
| Options | Measured/Calculated |

# Capacitor overvoltage (ANSI 59C)

## Description

This capacitor overvoltage protection function (ANSI code 59C) calculates the voltages of a three-phase Y-connected capacitor bank using the measured currents of the capacitors and the capacitor reactance. No voltage measurements are needed. Especially in filter applications, there are harmonics and, depending on the phase angles, the harmonics can increase the peak voltage. This protection function calculates the worst-case overvoltage in per-unit values according to IEC 60871-1 standard. Harmonics up to 15th are taken into account.

$$U_c = \frac{X_c}{U_{cLN}} \sum_{n=1}^{15} \frac{I_h}{n}$$ P533EJB

where

$$X_c = \frac{1}{2 \cdot \pi \cdot f \cdot C_{set}}$$ P533EKA

$U_c$ = Amplitude of a pure fundamental frequency sine wave voltage, whose peak value is equal to the maximum possible peak value of the actual voltage (including harmonics) over a Y-coupled capacitor.

$X_c$ = Reactance of the capacitor at the measured frequency

$U_{cLN}$ = Nominal voltage of the capacitance C.

n = Order number of harmonic. n = 1 for the fundamental frequency component. n = 2 for 2nd harmonic etc.

$I_h$ = nth harmonic of the measured phase current. h = 1 - 15.

f = Measured system frequency.

$C_{set}$ = Single phase capacitance between phase and starpoint.

The above equation gives the maximum possible voltage, while the actual voltage depends on the phase angles of the involved harmonics. The protection is sensitive to the highest voltage of the three phase to neutral voltages. Whenever this value exceeds the start setting of a particular stage, this stage starts and issues a start signal. If the fault situation is present longer than the definite operation delay setting, a trip signal is issued.

## Reactive power of the capacitor bank

The rated reactive power per phase-earth/ground capacitor is calculated as follows:

$$Q_n = 2 \cdot \pi \cdot f_n \cdot U_{cLN}^2 \cdot C_{set}$$ P533ELA

$Q_n$ = Rated reactive power of the three-phase capacitor bank

$f_n$ = Rated frequency. 50 Hz or 60 Hz.

$U_{cLN}$ = Nominal voltage of the capacitance C.

$C_{set}$ = Single phase capacitance between phase and starpoint.

## Three separate capacitors connected in star (III Y)

In this configuration, the capacitor bank is built of three single-phase sections without internal interconnections between the sections. The three sections are externally connected to a star (Y). The single-phase to starpoint capacitance is used as the setting value.

**Figure 270 - Example of star (III Y) connected capacitor bank**

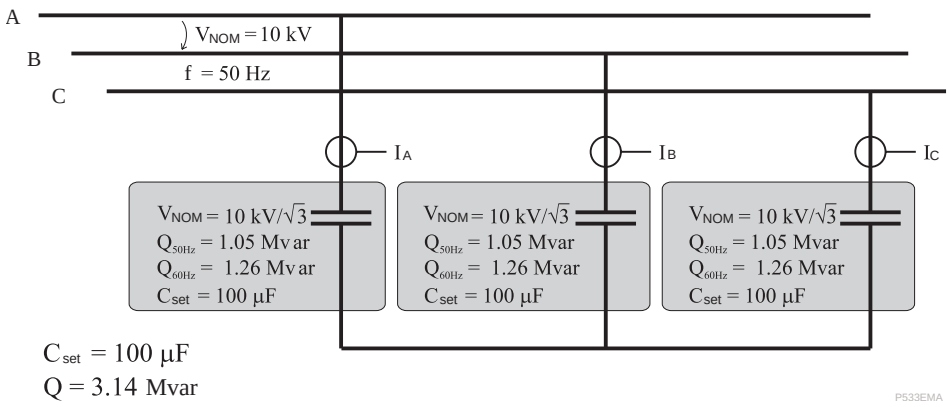


# Three phase capacitor connected internally in star (Y)

In this configuration, the capacitor bank consists of a three-phase capacitor connected internally to a star (Y).

The single-phase to starpoint capacitance is used as the setting value, which can be calculated from the capacitance $C_{AB}$ between phases A and B (as given on the nameplate): $C_{set} = 2C_{AB}$

**Figure 271 - Three-phase capacitor bank connected internally in star (Y)**

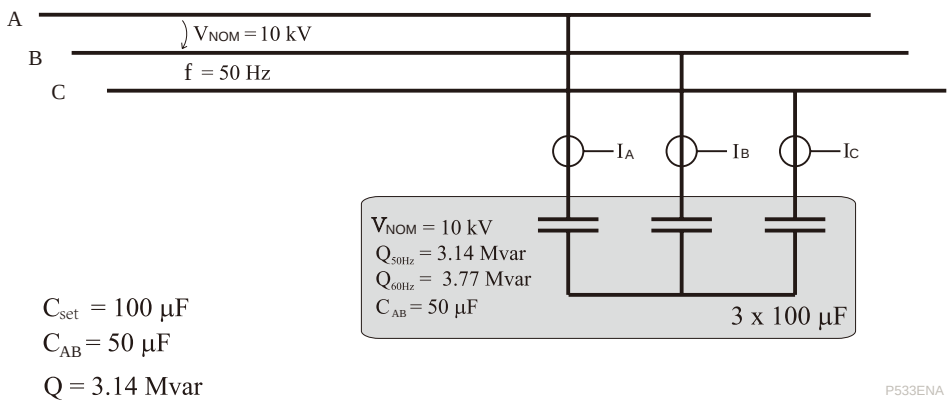


Capacitance between phases A and B is 50 µF and the equivalent phase to neutral capacitance is 100 µF whose value is also used as the setting value.

# Overvoltage and reactive power calculation example

The capacitor bank is built of three separate 100 µF capacitors connected in star (Y). The rated voltage of the capacitors is 8 kV; the measured frequency is 50.04 Hz and the rated frequency is 50 Hz.

The measured fundamental frequency current of phase A is: IA = 181 A; the measured relative 2nd harmonic is: 2% = 3.62 A; the measured relative 3rd harmonic is: 7% = 12.67 A; the measured relative 5th harmonic is: 5% = 9.05 A.

According to equation $C_{set} = C_{nameplate}$, the phase to starpoint capacitance is: $C_{set}$ = 100 µF

The rated power is: $Q_n$ = 2011 kvar

$$Q_n = 2 \cdot \pi \cdot f_n \cdot U_{cLN}^2 \cdot C_{set}$$

P533ELA

The reactance is: $X_c$ = 1 / (2π x 50.04 x 100 x 10 - 6) = 31.806 Ω

$$X_c = \frac{1}{2 \cdot \pi \cdot f \cdot C_{set}}$$ P533EKA

The pure fundamental voltage $U_c$ having a peak value equal to the highest possible voltage with similar harmonic content as the measured reactive capacitor currents is: Ucp1 = 31.806 x (181 / 1 + 3.62 / 2 + 12.67 / 3 + 9.05 / 5) = 6006 V

and in per-unit values: Ucp1 = 6006/8000 = 0.75

$$U_c = \frac{X_c}{U_{cLN}} \sum_{n=1}^{15} \frac{I_h}{n}$$ P533EJB

The same calculation is executed for phases B and C. The highest of the three values is compared to the start setting.

# Block diagram

**Figure 272 - Block diagram of the capacitor overvoltage protection function (ANSI 59C)**

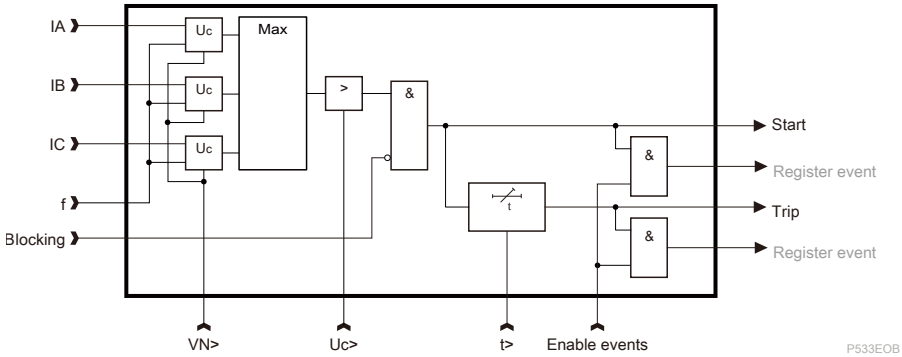


# Characteristics

**Table 96 - Settings and characteristics of the capacitor overvoltage protection Vcap>1**

| Settings/characteristics (description/label) | Values |
|---|---|
| **Pick-up value/$U_c$>** | |
| Setting range | 0.10...2.50 x$U_c$LN[108] |
| Resolution | 0.01 |
| Accuracy | ±3% |
| Reset ratio | 97% ± 2% |
| **L-N capacitance of one phase/C** | |
| Setting range | 1.00...650.00 µF |
| Resolution | 0.01 µF |
| **Rated L-N voltage $U_c$LN/$U_c$LN** | |
| Setting range | 100...260000 V |
| Resolution | 1 V |
| **Operate delay/t> (DT)** | |
| Setting range | 0...30.0 s |

108. Phase to ground voltage rating of capacitor

**Table 96 - Settings and characteristics of the capacitor overvoltage protection Vcap>1 (Continued)**

| Settings/characteristics (description/label) | Values |
|---|---|
| Resolution | 0.5 s |
| Accuracy | < 1.5 s |
| **Characteristic times** | |
| Start time | < 1.5 s |
| Disengaging time | < 1.5 s |
| **Setting group** | |
| Number | 4 |

# Non-directional/directional earth/ground fault overcurrent (ANSI 50N/51N/67N)

## Description

The earth/ground fault overcurrent protection function (ANSI code 50N/51N/67N) is used in networks or motors where a selective and sensitive earth/ground fault protection is needed and in applications with varying network structure and length.

The directional earth/ground fault protection is adapted for various network earth/ground systems.

According to the model of the PowerLogic P5 protection relay, the neutral current can be:

- Measured with standard earth/ground fault CT;
- Measured with sensitive earth/ground fault CT;
- Measured with a CSH core balance CT;
- Calculated with the sum of the three phase currents.

The function is sensitive to the fundamental frequency component of the non-directional/directional earth/ground fault overcurrent. When it is used as a directional overcurrent, it is also sensitive to the neutral voltage plus the angle between earth/ground fault current and neutral voltage, and the neutral voltage and the phase angle between them. It is not sensitive to the third harmonic. For directional mode, whenever the magnitude of neutral current IN and neutral voltage VN and the phase angle between IN and VN fulfils the start criteria, the stage starts and issues a start signal. If the fault situation is present longer than the operate delay setting, a trip signal is issued.

All 6 neutral overcurrent stages are also available with transformer differential protection P5T30 as back-up protection. Each stage can be individually linked to the measured neutral current or the calculated sum of the three phase currents of one end. If neutral voltage measurement from one end is available (depending on VT configuration), the stages linked to that end can operate in directional mode, too. Stages linked to the other end can operate in non-directional way only.

## Polarisation

The neutral displacement voltage used for polarisation is either directly measured by neutral voltage channel of the PowerLogic P5 protection relay or, alternatively, internally calculated from the three phase voltages depending on the selected voltage measurement mode.

- 3VP, 3VP/VPPy and 3VP/VPy:

  The neutral voltage is calculated from the phase voltages and therefore no separate neutral voltage transformers are needed. The setting values are relative to the VT primary value.
- 3VP+VN, 2VPP+VN, and 2VPP+VN+VPPy:

  The neutral voltage is measured with dedicated voltage transformer for example using a broken delta connection. The setting values are relative to the VN primary value.
- VPP/VPPy

  In this voltage measurement mode, only earth/ground fault overcurrent is available in the eSetup Easergy Pro.

## Dynamic setting element

Dynamic mode allows the earth/ground fault overcurrent protection settings dynamically adjusted during the transient period. It can be applied to cooperate

between the Cold Load Pick-up, and also to realize voltage-controlled overcurrent. For more information, refer to Dynamic setting element, page 379.

## Selective overcurrent logic

The SOL function have dynamic impacts on the earth/ground fault overcurrent settings of timer and start value. For more information on activating the SOL function, refer to Selective overcurrent logic, page 379.

## Inrush blocking

The user can block the overcurrent function by selecting the setting "Inrush blocking" of each stage. The purpose is to make the earth overcurrent function inoperative during the transformer energisation, otherwise a large primary current flow for a transient period will cause an unwanted trip. For more information, refer to Inrush blocking, page 379.

## Operating curve selection

The operating curve of the earth/ground fault overcurrent protection can be selected to DT, standard dependent operate delay, and programmable dependent operate delay. When the “Operating Curve” is set to IDMT curve, the settings “DT adder” and “Minimum operate time” will show up. “DT adder” defines the additional time delay plus the IDMT timer. “Minimum operate time” defines the minimum operating time for IDMT curves to help ensure the IDMT stage will not trip faster than the DT stage when the fault current is very large. For more information, refer to Operating curve selection, page 380.

# Modes for different network types

The available modes are:

- ResCap

  This feature can be used with compensated networks when the Petersen coil is temporarily switched off. This mode consists of two sub modes, Res and Cap. A digital signal can be used to dynamically switch between these two submodes. When the digital input is active (DI = 1), Cap mode is in use and when the digital input is inactive (DI = 0), Res mode is in use.

  - Res

    The stage is sensitive to the resistive component of the selected IN signal. This mode is used with compensated networks (resonant earthing/grounding) and networks earthed/grounded with a high resistance (resistive earthing/grounding). Compensation is usually done with a Petersen coil between the neutral point of the main transformer and earth/ground. In this context, high resistance means that the maximum earth/ground fault current is limited to a certain value, e.g. to the rated phase current. The trip area is a half plane as drawn in Operation characteristic of the directional earth/ground fault protection in Res or Cap mode, page 416. The base angle is usually set to zero degrees.

  - Cap

    The stage is sensitive to the capacitive component of the selected IN signal. This mode is used with unearthed/ungrounded (isolated) networks. The trip area is a half plane as drawn in Operation characteristic of the directional earth/ground fault protection in Res or Cap mode, page 416. The base angle is usually set to zero degrees.

- Sector

  This mode is used with networks earthed/grounded with a small resistance. In this context, "small" means that a fault current may be more than the rated phase currents. The trip area has a shape of a sector as drawn in Two examples of operation characteristic of the directional earth/ground fault stages in Sector mode, page 416. The angle offset is usually set to zero degrees or slightly on the lagging inductive side (negative angle).

- NoDir

  This mode makes the stage equal to the non-directional stage IN>. The phase angle and VN amplitude setting are discarded. Only the amplitude of the selected IN input matters.

**Figure 273 - Operation characteristic of the directional earth/ground fault protection in Res or Cap mode**

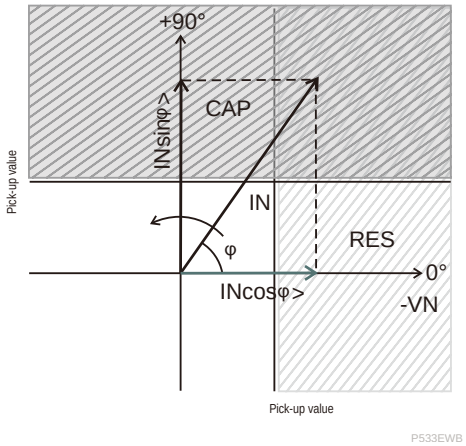


**Figure 274 - Two examples of operation characteristic of the directional earth/ground fault stages in Sector mode**

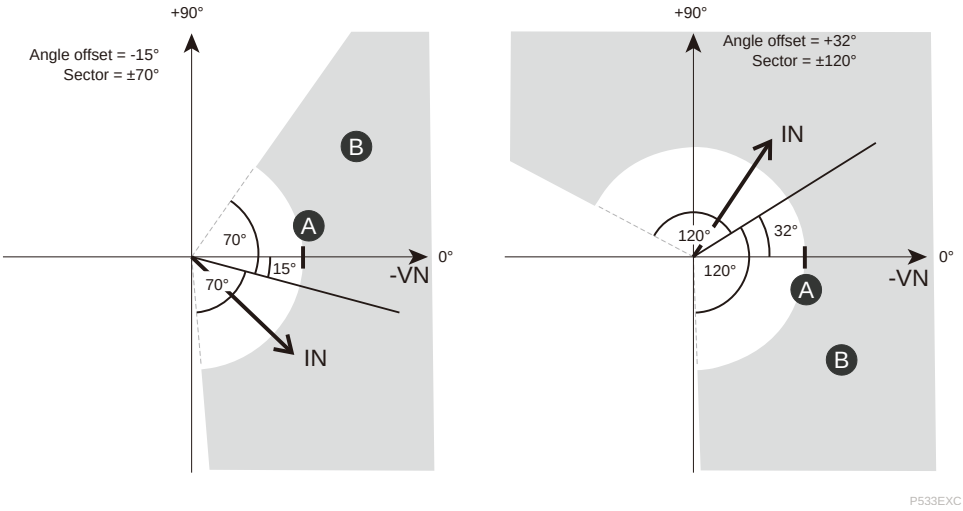


| | | | |
|---|---|---|---|
| A | IN pick-up setting | B | Trip area |

The drawn IN phasor in both figures is inside the trip area. The angle offset and half sector size are user’s parameters.

# Input signal selection

Each stage can be connected to supervise any of the following inputs and signals:

- Input IN measured for all networks other than solidly earthed/grounded.

- Calculated neutral current $IN_{calc}$ for solidly and low-impedance earthed/grounded networks.

# Intermittent earth/ground fault detection

Short earth/ground faults make the protection start but do not cause a trip. A short fault means one cycle or more. For transient intermittent earth/ground faults shorter than 1 ms in compensated networks, there is a dedicated protection stage IN.int>. When starting happens frequently, such intermittent faults can be cleared using the intermittent time setting.

When a new start happens within the set intermittent time, the operation delay counter is not cleared between adjacent faults and finally the stage trips.

# Faulty phase detection during earth/ground fault

## Phase recognition

A neutral voltage displacement has been detected.

A faulted phase or phases are detected in the two-stage system.

1. Use delta principle to detect the faulty phase/phases.
2. Configuration of the faulty phase with neutral current angle comparison to the suspected faulted phase.

For an ideal, grounded network, when there is a forward earth/ground fault in phase A, its current increases, creating a calculated or measured zero sequence current with a phase angle of 0 degrees. If there is a reverse earth/ground fault in phase A, its current decreases creating a calculated or measured zero sequence current with a phase angle of 180 degrees.

When there is a forward earth/ground fault in phase B, its current increases creating a calculated or measured zero sequence current with a phase angle of -120 degrees. If there is a reverse earth/ground fault in phase B, its current decreases creating a calculated or measured zero sequence current with a phase angle of 60 degrees. When there is a forward earth/ground fault in phase C, its current increases creating a calculated or measured zero sequence current with a phase angle of 120 degrees. If there is a reverse earth/ground fault in phase C its current degreases creating a calculated or measured zero sequence current with a phase angle of -60 degrees.

For a compensated network, the stability of the protection depends on the network compensation degree. So for compensated networks, this feature can be turned off to avoid confusion.

For high-impedance earthed/grounded networks, there is a drop-down menu in all setting groups to choose between RES/CAP. RES is the default and it is for earthed/grounded networks. When CAP is chosen, the IN angle is corrected to an inductive direction of 90 degrees.

## Possible outcomes and conditions for those detections

- FWD IA

  Phase A increases above the set limit and two other phases remain inside the set (delta) limit. IN current angle is +/- 60 degrees from phase A's phase angle.
- FWD IB

  Phase B increases above the set limit and two other phases remain inside the set (delta) limit. IN current angle is +/- 60 degrees from phase B's phase angle.

- FWD IC

  Phase C increases above the set limit and two other phases remain inside the set (delta) limit. IN current angle is +/- 60 degrees from phase C's phase angle.
- FWD IA - IB

  Phase A and B increase above the set limit and phase C remains inside the set (delta) limit. IN current angle is between phase A's and phase B's phase angles.
- FWD IB - IC

  Phase B and C increase above the set limit and phase A remains inside the set (delta) limit. IN current angle is between phase B's and phase C's phase angles.
- FWD IC - IA

  Phase C and A increase above the set limit and phase B remains inside the set (delta) limit. IN current angle is between phase C's and phase A's phase angles.
- FWD IA - IB - IC

  All three phase currents increase above the set delta limit.
- REV 1 (any one phase)

  One phase decreases below the set delta limit and other two phases remain inside the delta limit.
- REV 2 (any two phases)

  Two phases decrease below the set delta limit and third phase remains inside the delta limit.
- REV 3 (all three phases)

  All three phase currents decrease below the set delta limit.

## Different simulated fault scenarios

**Figure 275 - Phase A forward**

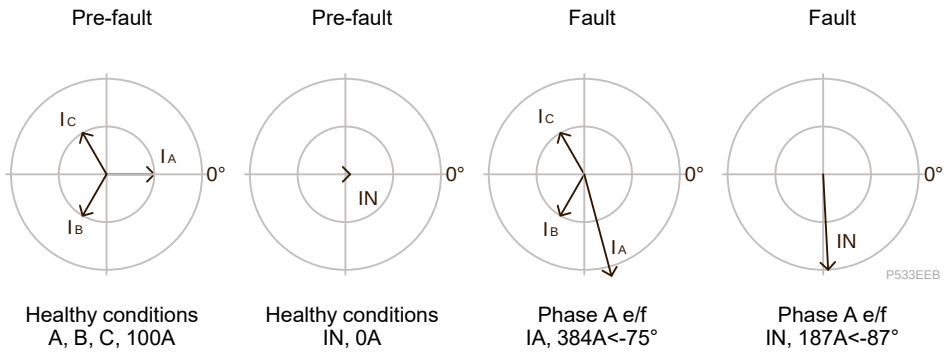


**Figure 276 - Phase B forward**

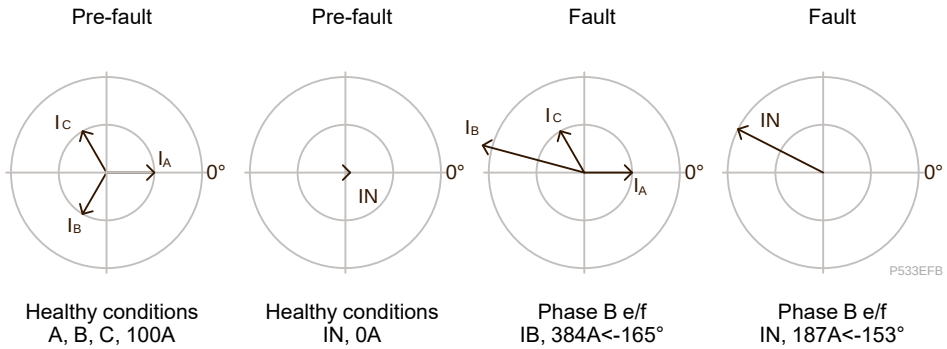

**Figure 277 - Phase C forward**

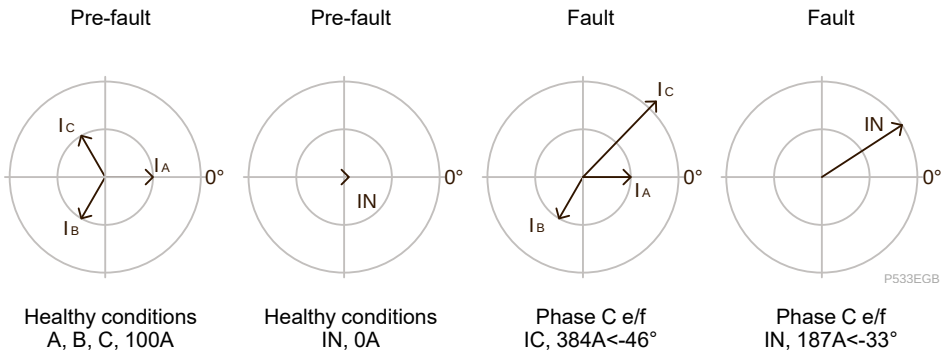


## Fault recording

When a faulty phase is recognised, it is recorded in the earth/ground fault current protection fault log (also in the event list and alarm screen). This faulted phase and direction recording function have a tick box in eSetup Easergy Pro for enabling/disabling in the protection stage settings.

## Six independent stages

There are six separately adjustable stages: IN>1, IN>2, IN>3, IN>4, IN>5 and IN>6.

All the stages can be configured for definite operation time (DT) or dependent operation time.

**NOTE:** The PowerLogic P5 protection relay shows a scalable graph of the configured delay on the local panel display.

## Restricted earth-fault with external connection (high-impedance)

The high impedance protection principle can be applied as differential protection for machines, power transformers and busbar installations. It is offering stability for any type of fault occurring outside the protected zone and satisfactory operation speed for faults within the zone. The PowerLogic P5 protection relays can realize this application. Both the standard neutral overcurrent element and the very sensitive neutral overcurrent element can be used for high-impedance restricted earth fault (REF) protection. The information about application, setting examples and recommendations for resistors can be found in the Application Book.

## Back-up mode

The back-up mode is for PowerLogic P5L30 only.

The negative sequence overcurrent protection, the non-directional/directional phase overcurrent protection and the non-directional/directional earth/ground fault overcurrent protection can be set as backup protections of the line differential protection in case the line differential protection is permanently blocked. By default, the overcurrent stages are active. Once the back-up mode is enabled, the overcurrent protections will be active only if the line differential protection is blocked, and when the line differential protection is not blocked or disabled, the overcurrent protections will be inactive again.

To enable/disable the back-up mode, check/uncheck the **Back-up mode** in eSetup Easergy Pro/ **PROTECTION**/**Negative sequence overcurrent 46** and **Phase overcurrent 50/51/67** and **Ground fault overcurrent 50N/51N/67N**.

# Block diagram

**Figure 278 - Block diagram of the non-directional/directional earth/ground fault overcurrent protection function operating in ResCap mode (ANSI 50N/51N/67N)**

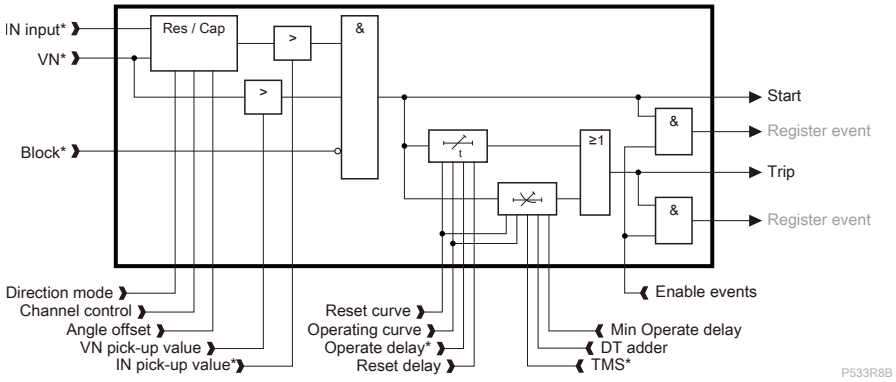


**NOTE:**

- The **IN input** can be *IN.calc, IN.meas, IN.sens* based on the configuration.
- The **VN** can be directly measured from an open delta VT or calculated from three phase VTs.
- **Block** input can be signals configured via Block Matrix, due to inrush condition detected, or blocked under the VTS condition based on the configuration and operating condition.
- **IN pick-up value** is either the setting **IN pick-up value** or the **Dynamic threshold** depending on the configuration and operating condition.
- **Operate delay** is either the setting **Operate delay**, the **SOL operate delay** or the **Dynamic operate delay** setting depending on the configuration and operating condition.
- **TMS** value is either the setting **TMS**, the **SOL TMS** or the **Dynamic TMS** setting depending on the configuration and operating condition.
- **Res / Cap**: when working as Res mode, the operate characteristic follows the equation: IN* cos (Angle (IN) - Angle(-VN) - Angle offset) > IN pick-up value. when working as Cap mode, the operate characteristic follows the equation: IN* sin (Angle (IN) - Angle(-VN) - Angle offset) > IN pick-up value.

**Figure 279 - Block diagram of the non-directional/directional earth/ground fault overcurrent protection function operating in Sector mode (ANSI 50N/51N/67N)**

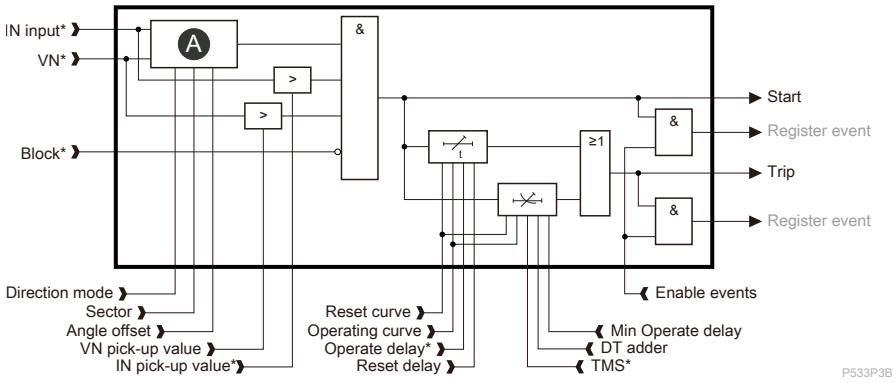


A Directional check
The operate characteristic should follow the equation: | Angle (IN) - Angle(-VN) - Angle offset | < Sector

**NOTE:**

- The **IN input** can be *IN.calc, IN.meas, IN.sens* based on the configuration.
- **Block** input can be signals configured via Block Matrix, due to inrush condition detected, or blocked under the VTS condition based on the configuration and operating condition.
- **IN pick-up value** is either the setting **IN pick-up value** or the **Dynamic threshold** depending on the configuration and operating condition.
- **Operate delay** is either the setting **Operate delay**, the **SOL operate delay** or the **Dynamic operate delay** setting depending on the configuration and operating condition.
- **TMS** value is either the setting **TMS**, the **SOL TMS** or the **Dynamic TMS** setting depending on the configuration and operating condition.

**Figure 280 - Block diagram of the non-directional/directional earth/ground fault overcurrent protection function operating in Non-dir mode (ANSI 50N/51N/67N)**

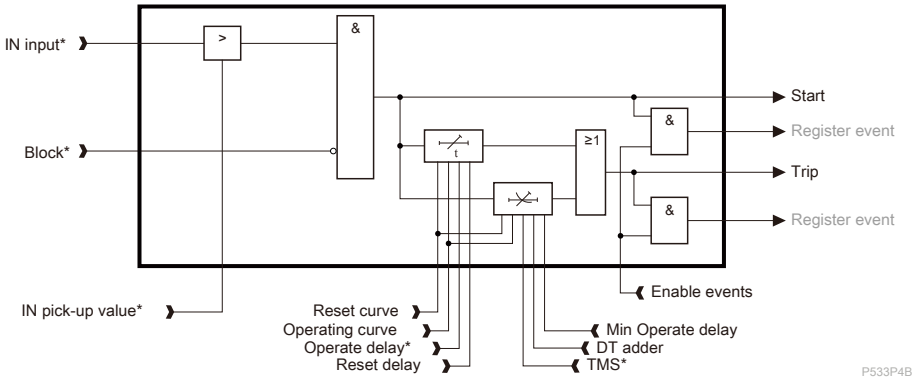


**NOTE:**

- The **IN input** can be *IN.calc, IN.meas, IN.sens* based on the configuration.
- **Block** input can be signals configured via Block Matrix, due to inrush condition detected, or blocked under the VTS condition based on the configuration and operating condition.
- **IN pick-up value** is either the setting **IN pick-up value** or the **Dynamic threshold** depending on the configuration and operating condition.
- **Operate delay** is either the setting **Operate delay**, the **SOL operate delay** or the **Dynamic operate delay** setting depending on the configuration and operating condition.
- **TMS** value is either the setting **TMS**, the **SOL TMS** or the **Dynamic TMS** setting depending on the configuration and operating condition.

# Characteristics

**Table 97 - Setting and characteristics of the non-directional/directional earth/ground fault overcurrent protection function (ANSI 50N/51N/67N)**

| Setting/characteristics (description/label) | Values |
|---|---|
| **IN Pick-up value/IN>** | |
| Setting range | For delay type DT:<br>0.020...20.000 pu[109] for IN measured with standard EF CT;<br>0.020...20.000 pu[109] for IN measured with standard EF CT(for CSH30 use); |

109. Inom for IN.calc; IN.nom for IN.meas; IN.sens.nom for IN.sens.meas; IN.CSH.nom for IN.CSH

**Table 97 - Setting and characteristics of the non-directional/directional earth/ground fault overcurrent protection function (ANSI 50N/51N/67N) (Continued)**

| Setting/characteristics (description/label) | Values |
|---|---|
| | 0.050...20.000 pu[110] for IN measured with CSH;<br>0.050...40.000 pu[110] for IN calculated;<br>0.002...1.000 pu[110] for IN measured with sensitive EF CT.<br><br>For delay type IDMT:<br>0.020...5.000 pu[110] for IN measured with standard EF CT;<br>0.020...5.000 pu[110] for IN measured with standard EF CT (for CSH30 use);<br>0.050...5.000 pu[110] for IN measured with CSH;<br>0.050...5.000 pu[110] for IN calculated;<br>0.002...1.000 pu[110] for IN measured with sensitive EF CT. |
| Resolution | 0.001 pu[110] |
| Accuracy | ±2% or ±0.002 pu[110] for IN measured with standard EF CT;<br>±2% or ±0.002 pu[110] for IN measured with standard EF CT (for CSH30 use);<br>±2% or ±0.005 pu[110] for IN measured with CSH;<br>±2% or ±0.005 pu[110] for IN calculated;<br>±2% or ±0.0005 pu[110] for IN.sens measured with sensitive EF CT. |
| Reset ratio | 95% ±2% or ±2mA |
| Transient overreach | < 5% for X/R up to 120 |
| **EFCT input selection[111]** | |
| Setting range | EFCT-1, EFCT-2 |
| **Back-up mode/Back-up mode[112]** | |
| Options | On/Off |
| **VN Pick-up value/VN Pick-up value** | |
| Setting range | 0.01...1.00 pu[113] |
| Resolution | 0.01 pu[113] |
| Accuracy | ±2% or ±0.005 pu[113] |
| **IN input/Input** | |
| Options | IN.calc, IN, IN.sens, IN.CSH |
| **VN input mode** | |
| Options | Measured, Calculated |
| **Operating Curve** | |
| Options | DT;<br>IEC: SI, VI, EI, LTI, UTI;<br>IEEE: MI, VI, EI<br>ANSI: NI, STI, LTI<br>Others: UK_Rectifier, FR_STI, RI, STI_CO2, LTI_CO5, MI_CO7, NI_CO8, VI_CO9, EI_CO11, BPN<br>Prg1-3 |
| Accuracy | ±5% or ±20 ms (for IDMT) |
| **Operate delay/Operate delay** | |
| Setting range | 0.00...300.00 s |
| Resolution | 0.01 |
| Accuracy | ±1% or ±10 ms |
| **TMS/TMS** | |
| Setting range | 0.020...20.000 |

110. Inom for IN.calc; IN.nom for IN.meas; IN.sens.nom for IN.sens.meas; IN.CSH.nom for IN.CSH
111. Available for P5T30 only.
112. Available for P5L30 only.
113. √3 x Vnom

**Table 97 - Setting and characteristics of the non-directional/directional earth/ground fault overcurrent protection function (ANSI 50N/51N/67N) (Continued)**

| Setting/characteristics (description/label) | Values |
|---|---|
| Resolution | 0.001 |
| **DT adder/DT adder** | |
| Setting range | 0.00...1.00 s |
| Resolution | 0.01 s |
| **Minimum operate delay/Min operate delay** | |
| Setting range | 0.00...10.00 s |
| Resolution | 0.01 s |
| **Direction mode/Direction mode** | |
| Options | ResCap, Sector, Non_Dir |
| **Char ctrl. in ResCap mode/ChCtrl** | |
| Options | Res, Cap, DI, VI |
| **Angle offset/Offset** | |
| Setting range | -180°...+179° |
| Resolution | 1° |
| Accuracy | ±2° |
| Reset ratio (angle) | 2° |
| **Pick up sector size** | |
| Sector size | 10°...170° |
| **VTS blocking** | |
| Options | Blocked, Non-directional |
| **Reset curve/Reset curve** | |
| Options | DT; IDMT; Prg1-3 |
| **Reset delay/Reset delay** | |
| Setting range | 0.00...100.00 s |
| Resolution | 0.01 s |
| Accuracy | ±1% or ±30 ms |
| **SOL use by INDir>** | |
| Options | Off; SOL1; SOL2 |
| **SOL operate delay/SOL operate delay** | |
| Setting range | 0.00...300.0 s |
| Resolution | 0.1s |
| Accuracy | ±1% or ±10 ms |
| **SOL TMS/SOL TMS** | |
| Setting range | 0.020...20.000 |
| Resolution | 0.001 |
| **Dynamic mode/Dynamic mode** | |
| Options | Off/On |
| **Dynamic threshold/Dyn pick-up value** | |
| Setting range | For delay type DT: |

**Table 97 - Setting and characteristics of the non-directional/directional earth/ground fault overcurrent protection function (ANSI 50N/51N/67N) (Continued)**

| Setting/characteristics (description/label) | Values |
|---|---|
| | 0.020...20.000 pu[114] measured with standard EF CT;<br>0.020...20.000 pu[114] measured with standard EF CT (for CSH30 use);<br>0.050...20.000 pu[114] measured with CSH;<br>0.050...40.000 pu[114] calculated;<br>0.002...10.000 pu[114] for IN measured with sensitive EF CT.<br><br>For delay type IDMT:<br>0.020...5.000 pu[114] for IN measured with standard EF CT;<br>0.020...5.000 pu[114] for IN measured with standard EF CT (for CSH30 use);<br>0.020...5.000 pu[114] for IN measured with CSH;<br>0.050...5.000 pu[114] for IN calculated;<br>0.002...1.000 pu[114] for IN measured with sensitive EF CT. |
| Resolution | 0.001 pu[114] |
| Accuracy | ±2% or ±0.002 pu[114] for IN measured with standard EF CT;<br>±2% or ±0.002 pu[114] for IN measured with standard EF CT (for CSH30 use);<br>±2% or ±0.005 pu[114] for IN measured with CSH;<br>±2% or ±0.005 pu[114] for IN calculated;<br>±2% or ±0.0005 pu[114] for IN.sens measured with sensitive EF CT. |
| **Dynamic operate delay/Dynamic op delay** | |
| Setting range | 0.00...300.00 s |
| Resolution | 0.01 s |
| Accuracy | ±1% or ±10 ms |
| **Dynamic TMS/Dynamic TMS** | |
| Setting range | 0.020...20.000 |
| Resolution | 0.001 |
| **Back-up mode** | |
| Enable back-up mode | Off/On |
| **Characteristic times** | |
| Start time | < 30 ms (25 ms with high speed) for currents at 2 x Is pick-up value (non-directional)<br><br>< 40 ms (35 ms with high speed) for currents at 1,2 x Is pick-up value (non-directional) |
| | < 45 ms (40 ms with high speed) for currents at 2 x Is pick-up value (directional)<br><br>< 50 ms (45 ms with high speed) for currents at 1,2 x Is pick-up value (directional) |
| Disengaging time | < 65 ms (80 ms, only for high speed high break digital outputs) |
| Overshoot time | < 40 ms for currents at 2 x Is |
| **Setting group** | |
| Number | 4 |

114. Inom for IN.calc; IN.nom for IN.meas; IN.sens.nom for IN.sens.meas; IN.CSH.nom for IN.CSH

# Restricted earth fault protection (ANSI 64REF)

## Description

Earth faults occurring on a transformer winding or terminal may be of limited magnitude, either due to the impedance present in the earth path or by the percentage of transformer winding that is involved in the fault. It is common to apply standby earth fault protection fed from a single CT in the transformer earth connection, this provides time-delayed protection for a transformer winding or terminal fault. In general, particularly as the size of the transformer increases, it becomes unacceptable to rely on time-delayed protection to clear winding or terminal faults as this would lead to an increased amount of damage to the transformer. A common requirement is therefore to provide instantaneous phase and earth fault protection. Applying differential protection across the transformer may fulfill these requirements. However, an earth fault occurring on the LV winding, particularly if it is of a limited level, may not be detected by the differential relay, as it is only measuring the corresponding HV current. Therefore, instantaneous protection that is restricted to operating for transformer earth faults only is applied. This is referred to as Restricted Earth Fault (REF) protection.

When applying differential protection such as REF, some suitable means must be employed to give the protection stability under external fault conditions, thus ensuring that relay operation occurs for faults inside the protected zone only. For this, two methods are commonly used:

- The low impedance REF (biased REF) technique operates by measuring the level of current flowing through the protected object (through phase, neutral and ground connections) and altering the relay sensitivity according to the level of currents. The dedicated 64REF protection function is such a biased differential function.
- The high impedance REF technique ensures that the relay circuit is of sufficiently high impedance such that the differential voltage that may occur under external fault conditions is less than that required to drive set current through the relay. Such protection scheme can be set up with P5 neutral overcurrent elements, as detailed in related application note.

**Figure 281 - Basic biased REF scheme**

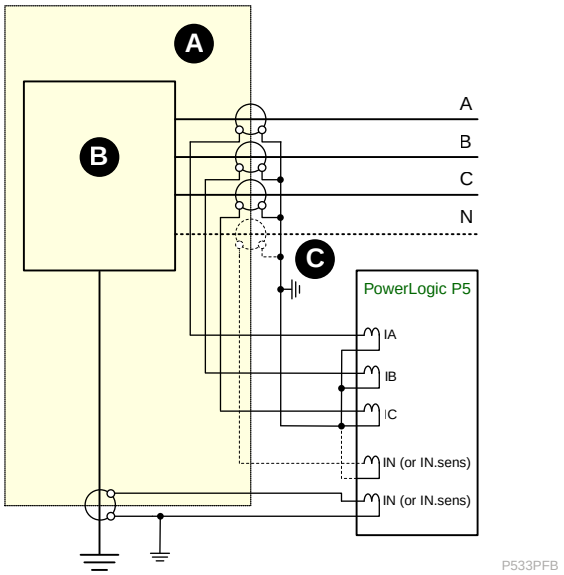


| | | | |
|---|---|---|---|
| A | Zone of protection | B | Protected object |
| C | Optional (5CT application) | | |

The Restricted Earth Fault (REF) protection principle has several advantages. It is very selective because the protection zone is limited between the current

transformers that are used for the Restricted Earth Fault (REF) protection. Because of its selectivity, the Restricted Earth Fault (REF) protection requires no additional time delay for protection coordination. Therefore, the Restricted Earth Fault (REF) protection is especially suitable for the protection of transformers and rotating machines against internal ground faults. Because of the differential protection principle, it is also very sensitive which makes it suitable for detecting faults located near the neutral point of transformers and rotating machines.

The low-impedance Restricted Earth Fault (REF) protection function is sensitive to the fundamental frequency component of the measured currents.

With transformer differential protection P5T30 two REF elements are available with a fix link to the measured currents of one end (REF-1 to end 1, REF-2 to end 2).

## Wording

REF is also referred to as Balanced Earth Fault (BEF) Protection, where this terminology is usually used when the protection is applied to a delta winding. Also in some areas the use of "Ground" instead of "Earth" is preferred.

## 5CT Application

For protection of 4 wire systems (including the dashed connections in Basic biased REF scheme, page 425) the "5CT application" feature in REF has to be enabled. In all other REF applications this feature shall remain disabled.

This feature is not available with P5T30.

## CT polarity

Low impedance Restricted Earth Fault (REF) protection function measures phase and neutral currents, as sketched in Basic biased REF scheme, page 425. When calculating differential and bias currents, the sign of the measured currents must be considered. Accordingly, settings are provided to adjust actual wiring to the function needs. For the CT orientation and polarity, please refer to CT and LPCT typical application, page 71 and Scaling settings, page 490.

## Amplitude matching

Neutral CTs can have smaller current ratio than phase CTs, reflecting different expected fault currents for phase and ground faults as a result from power system grounding impedances. In order to calculate correct differential and bias currents, such differences in CT ratio must be considered.

For this purpose, Restricted Earth Fault (REF) protection function automatically scales all currents to a common reference, which is the phase CT primary current. This scaling uses matching factors which are calculated from the ratio of the neutral and phase CTs.

- Standard earth fault current amplitude matching factor:

  IN CT scaling factor = Neutral CT ratio / Phase CT ratio
- Sensitive earth fault current amplitude matching factor:

  IN.sens scaling CT factor = Sensitive neutral CT ratio / Phase CT ratio

  Where:
  - Phase CT ratio = IP CT primary / IP CT secondary
  - Neutral CT ratio = IN CT primary / IN CT secondary
  - Sensitive neutral CT ratio = IN.sens CT prim. / IN.sens CT sec.

Permissible ranges of the matching factors are within 0.01 and 10. If this condition is not satisfied, the low impedance Restricted Earth Fault (REF) protection will be blocked.

Example: Phase CT ratio is 1000A: 1A; Neutral CT ratio is 500A: 5A; Then reference current is 1000A = phase CT primary nominal current and IN scaling factor is 500:5 / 1000:1 = 0.1.

## Measurements

Protection function calculates differential and bias currents. The continuously updated values of these measurements are displayed on device HMI and are available for communication both to local operating tool as well as to remote SCADA systems for monitoring during normal operation or check during commissioning.

The differential current is always calculated as vectorial sum of all currents, for example:

- In 4 CT application: Id = | IA + IB + IC + I'G |
- In 5 CT application: Id = | IA + IB + IC + I'G + I'N |

Where:

- IA, IB, IC are the phase currents.
- I'G is the amplitude matched current flowing through the star point to ground (measured through standard or sensitive neutral CT acc. to selected IG input).
- I'N is the amplitude matched current from the neutral wire CT in "5CT application" (measured through remaining neutral CT, not set as IG input).

The bias current calculation depends on selected operating mode.

# Operating modes

There are two operating modes selectable:

- Sum(IP) bias = Biased by sum of phase currents
- Max(IP) bias = Biased by maximum phase current

The difference between both is the definition of the restraining current and their tripping characteristic.

## Biased by sum of phase currents

In this operating mode, bias current is calculated as follows:

- In 4 CT application: Ib = | IA + IB + IC | = | Σ(IP) |
- In 5 CT application: Ib = | IA + IB + IC |

Where:

- IA, IB, IC are the phase currents.

The related differential characteristic is shown in REF tripping characteristic in operating mode "Sum(IP) bias", page 428 as the solid red line.

**Figure 282 - REF tripping characteristic in operating mode "Sum(IP) bias"**

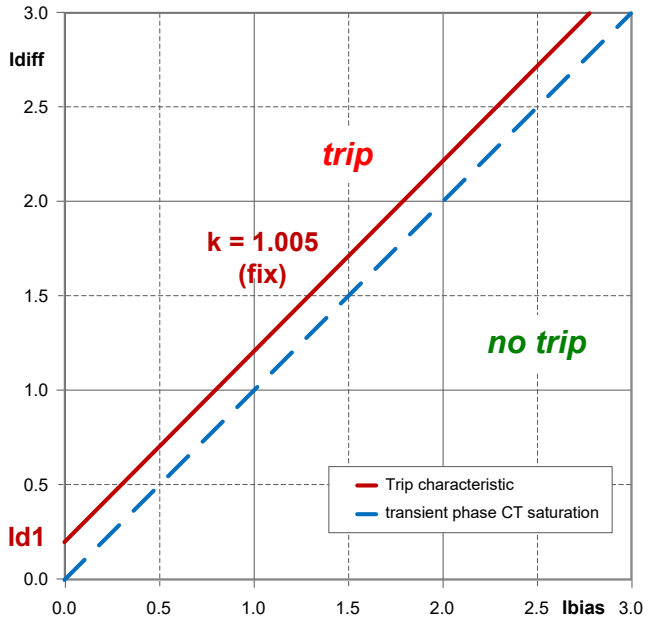


The characteristic has a fixed slope of 1.005, beginning at the "Low set Id1". The characteristics equation is: Id = Id1 + 1.005 x Ib.

The dashed blue line indicates the values of apparent differential and bias currents (Id, Ib) in case of transient saturation of a phase CT during an external phase fault. As per definition above for calculating differential and bias currents, this characteristic is always below the tripping characteristic, hence in stable region.

The slope provides slight increase of stability margin (slight increase of required differential current for tripping) with increasing sum of phase currents.

> **NOTE:** Low impedance REF biased by sum of phase currents is only applicable where the protected object (e.g. transformer winding) has a neutral point earthing which is fitted with a CT, because it needs measured ground current to operate. So this mode cannot be applied for balanced earth fault protection or delta windings. Its main advantage is an inherent stability against transient phase CT saturation.

## Biased by maximum phase current

In this operating mode, bias current is calculated as follows:

- In 4 CT application: Ib = 0.5 x (Max{| IA |, | IB |, | IC | } + | I'G |)
- In 5 CT application: Ib = 0.5 x (Max{| IA |, | IB |, | IC | } + | I'N |+ | I'G |)

Where:

- IA, IB, IC are the phase currents.
- I'G is the amplitude matched current flowing through the star point to ground (measured through standard or sensitive neutral CT acc. to selected "IG input").
- I'N is the amplitude matched current from the neutral wire CT in "5CT application" (measured through standard or sensitive neutral CT not selected as "IG input").

A dual slope characteristic is required with this operating mode, as shown in REF Tripping characteristic in operating mode "Max(IP) bias", page 429 as solid red line.

**Figure 283 - REF Tripping characteristic in operating mode "Max(IP) bias"**

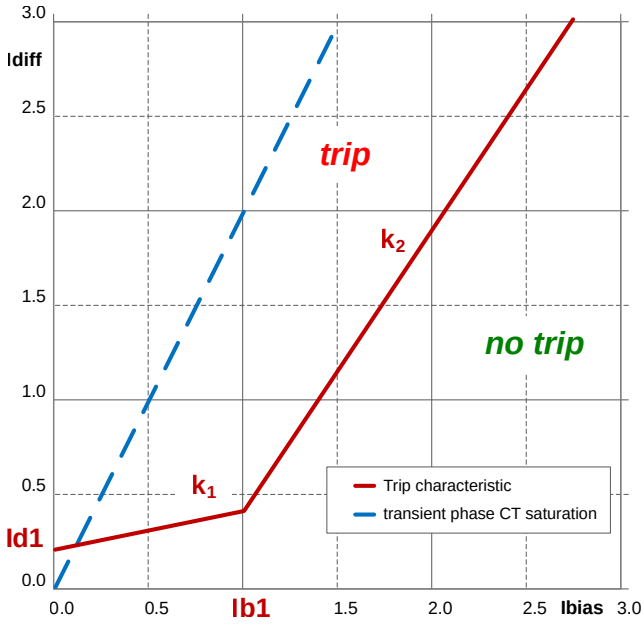


Also this characteristic starts at "Low set Id1", has a first section with "slope k1" for bias currents up to "Bias current Ib1" setting and then a second section with higher "slope k2" for increased stability at high bias current levels.

The characteristics equations for the two ranges are:

- For Ib ≤ Ib1: Id = Id1 + k1 x Ib
- For Ib > Ib1: Id = Id1 + k1 x Ib + (k2 - k1) x (Ib – Ib1)

The dashed blue line in the figure indicates the values of apparent differential and bias currents (Id, Ib) in case of transient saturation of a phase CT (or likewise a single phase current infeed test).

In order to reduce the risk of false tripping caused from phase CT saturation only, this operating mode is accomplished with a check for minimum ground current. A trip is released only if the measured current exceeds the set threshold “Min measured IG”.

**NOTE:**

- It is recommended that this threshold is set below Id1, otherwise it introduces a further restriction in the tripping characteristic. If this constraint is intentionally not required, it could be disabled by setting the threshold to 0 pu.
- This mode has the advantage of being universally applicable to all kinds of protected objects with or without neutral point earthing, i.e. including balanced earth fault protection for unearthed star or delta windings. Unless minimum star point current constraint is set up, this bias definition also allows the user to apply tripping test simply by shorting a phase current (for simulation of neutral current) without the need of current injection equipment.

# Block diagram

**Figure 284 - Low impedance REF function structure overview**

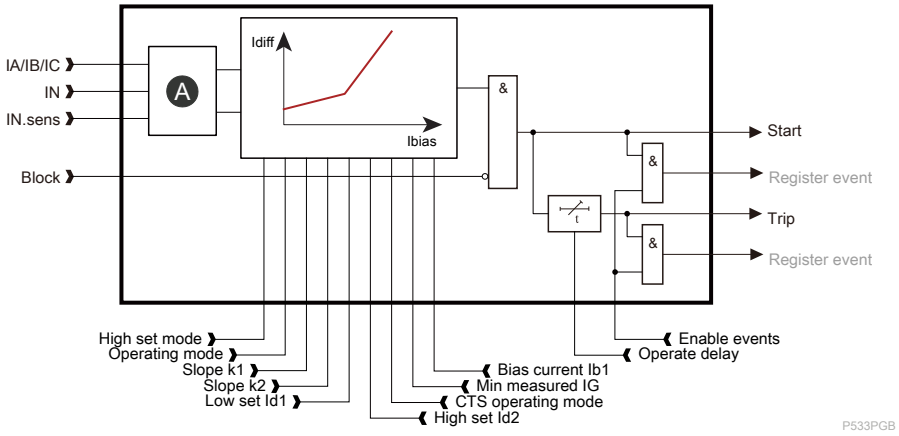


| | |
|---|---|
| A | REF calculation |

## High-set unrestrained differential operation

Within low impedance REF protection function an unrestrained operation can be enabled by selecting "High set mode". If this feature is enabled and the differential current exceeds the “High set Id2”, REF will trip regardless the actual bias current.

## Current Transformer Supervision (CTS)

REF operation in presence of a CTS alarm is settable as follows:

- Indication: CTS alarm has no impact on REF operation. It is an indication only.
- Blocking: REF is blocked while the CTS alarm is present, to avoid any maloperation.
- Restraining: REF trip characteristic is shifted vertically while the CTS alarm is present, by activating the dedicated setting "CTS low set Id1" instead of normal "Low set Id1". That way bias is increased, yet REF remains operational for faults with high current level.

# Characteristics

**Table 98 - Settings and characteristics of the low impedance restricted earth fault protection function (ANSI 64REF)**

| Settings/characteristics (description/label) | Values |
|---|---|
| **IG input/IG input** | |
| Option | IN.meas/IN.sens |
| **5 CT application/5 CT application** | |
| Option | Enable/Disable |
| **Phase CT polarity/Phase CT polarity[115]** | |
| Option | Standard/Opposite |
| **Neutral CT polarity/Neutral CT polarity[115]** | |
| Option | Standard/Opposite |
| **Sensitive neutral CT polarity/Sensitive neutral CT polarity[115]** | |
| Option | Standard/Opposite |
| **Operating mode/Operating mode** | |
| Option | Sum(IP) bias/Max(IP) bias |
| **Low set Id1/Low set Id1** | |
| Setting range | 0.10...1.00 pu[116] |
| Resolution | 0.01 pu[116] |
| **Min measured IG/Min measured IG** | |
| Setting range | 0.00...1.00 pu[116] |
| Resolution | 0.01 pu[116] |
| **Slope k1/Slope k1** | |
| Setting range | 0...100% |
| Resolution | 1% |
| **Slope k2/Slope k2** | |
| Setting range | 10...200% |
| Resolution | 1% |
| **Bias current Ib1/Bias current Ib1** | |
| Setting range | 0.10...1.50 pu[116] |
| Resolution | 0.01 pu[116] |
| **High set mode/High set mode** | |
| Option | Enable/Disable |
| **High set Id2/High set Id2** | |
| Setting range | 2.00...30.00 pu[116] |
| Resolution | 0.01 pu[116] |
| **Operate delay/Operate delay** | |
| Setting range | 0.00...1.00 s |
| Resolution | 0.01 s |
| **CTS operating mode/CTS operating mode** | |
| Option | Indication/Blocking/Restraining |

115. These settings can be found in the GENERAL menu/Scaling sub-menu.
116. Inom

**Table 98 - Settings and characteristics of the low impedance restricted earth fault protection function (ANSI 64REF) (Continued)**

| Settings/characteristics (description/label) | Values |
|---|---|
| **CTS low set Id1/CTS low set Id1** | |
| Setting range | 0.00...1.00 pu[117] |
| Resolution | 0.01 pu[117] |
| **Phase current input selection[118]** | |
| Stage 1 | Fixed to CT-1 |
| Stage 2 | Fixed to CT-2 |
| **Inhibit REF/Inhibit REF** | |
| Option | DI/VI/Function key |
| **Characteristic times** | |
| Start time | < 40 ms (35 ms with high speed) for currents at 2 x pick-up value |
| Accuracy | ±3% or ±0.005 pu |
| Reset ratio | 95% ± 2% |
| **Setting group** | |
| Number | 4 |

117. Inom
118. Available for P5T30 only.

# Transient intermittent earth/ground fault (ANSI 67NI)

## Description

The directional transient intermittent earth/ground fault protection function (ANSI code 67NI) is used to detect short transient intermittent faults in compensated cable networks. The transient faults are self-extinguished at the zero crossing of the transient part of the fault current $I_{Fault}$ and the fault duration is typically just 0.1 - 1 ms. Such short intermittent faults cannot be correctly recognised by conventional directional earth/ground fault function using the fundamental frequency components of IN and VN only.

Although a single transient fault usually self extinguishes within less than 1 ms, in most cases a new fault happens when the line to neutral voltage of the faulty phase has recovered.

**Figure 285 - Typical line to neutral voltages, earth/ground fault current of the faulty feeder and the neutral displacement voltage during two transient earth/ground faults in phase A (the network is compensated)**

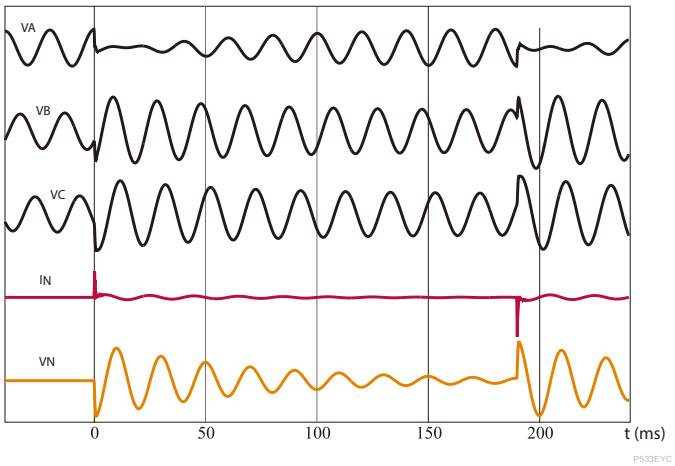


## Block diagram

**Figure 286 - Block diagram of the directional transient intermittent earth/ground fault stage IN.int>**

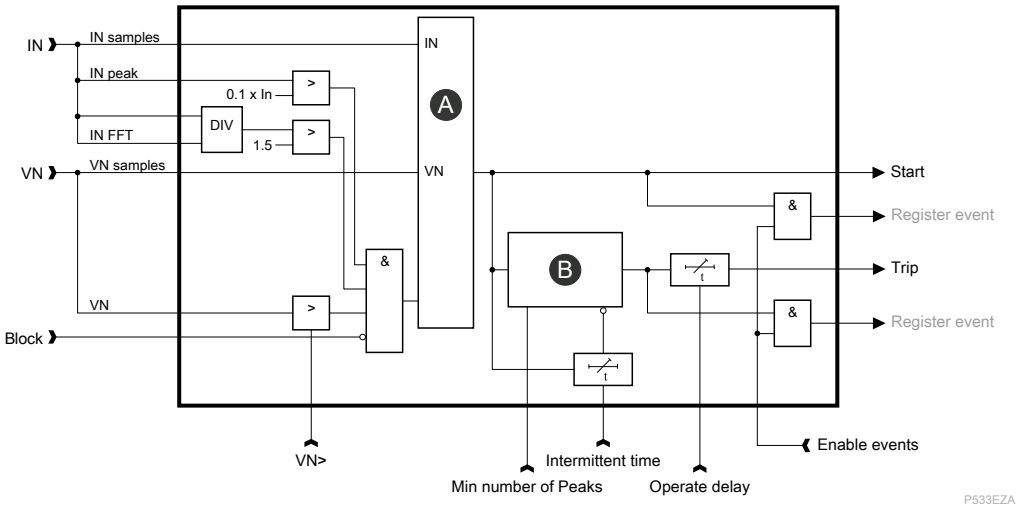


| | | | |
|---|---|---|---|
| A | Transient algorithm | B | Counter |

# Operation

## Direction calculation

The function is sensitive to the instantaneous sampled values of the earth/ground fault overcurrent and neutral voltage displacement voltage. The sample of the neutral voltage can be from a direct VN measurement with a voltage transformer, or can be calculated from the three phase voltages.

**NOTE:** Connect the VN signal according to the connection diagram to achieve correct polarisation.

## Co-ordination with the conventional directional earth/ground fault protection based on fundamental frequency signals

The transient intermittent earth/ground fault current stage IN.int> should always be used together with the conventional directional earth/ground fault overcurrent protection stages IN>1, IN>2. The transient stage IN.int> may in worst case detect the start of a steady earth/ground fault in wrong direction but does not trip because the peak value of a steady state sine wave IN signal must also exceed the corresponding base frequency component's peak value to allow IN.int> to trip. The operate time of the transient stage IN.int> should be lower than the settings of any directional earth/ground fault overcurrent stage to avoid any unnecessary trip from the IN>1 and IN>2 stages .The start signal of the IN.int> stage can be also used to block IN>1, IN>2 stages of all parallel feeders.

## Auto reclosing

The start signal of any IN>1 stage initiating auto reclosing (AR) can be used to block the IN.int> stage to avoid the IN.int> stage with a long intermittent setting to interfere with the AR cycle.

Usually the IN.int> stage itself is not used to initiate any AR. For transient faults, the AR does not help because the fault phenomena itself already includes a repetitive unsuccessful self-extinguishing.

## Operate time, peak amount counter and intermittent time coordination

The protection function has three independently settable parameters: operation delay, required number of peaks and intermittent time. All characteristics need to be satisfied before the stage issues a trip signal. There is also a settable reset delay so that the stage does not release before the circuit breaker has operated. If, for example, the number of peaks is set to 2, the operation delay is set to 160 ms and the intermittent time to 200 ms, then the function starts the operation delay from the first peak. If the second peak occurs after 80 ms, the peak amount criteria is satisfied. After 160 ms the delay time elapses, all operate criteria are satisfied and the stage trips.

If the second peak does not occur before the operational delay elapses, the stage is released after the intermittent time has elapsed. But if the second peak occurs after the operate time has elapsed but still within the intermittent time, then a trip is issued instantly.

If the intermittent time elapses before the operation delay elapses, the stage is reset.

There are a couple of limitations to avoid completely incorrect settings. Peaks cannot occur more often than twice per period, so there are about 10 ms in between (at 50 Hz nominal frequency). Therefore if the peak amount is set to 10, then the operation delay setting does not accept a value smaller than 100 ms. Vice versa, if the operation delay is set to 40 ms, then it is not possible to set a peak amount greater than 4. This prohibits settings that can be never satisfied.

**Figure 287 - Peak amount condition is satisfied and operate time elapses within intermittent time setting. Stage issues a trip.**

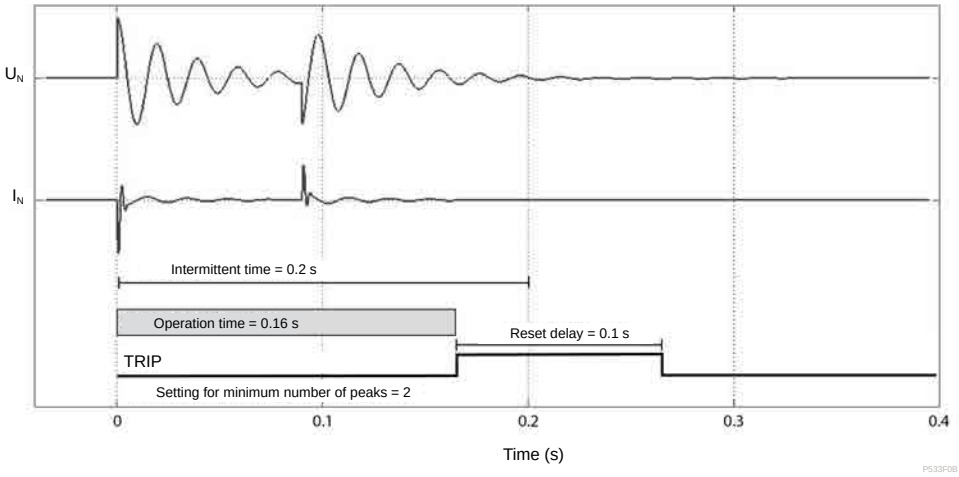


**Figure 288 - Peak amount condition is not satisfied when operation delay elapses but last required peak occurs during intermittent time. Stage then issues instant trip.**

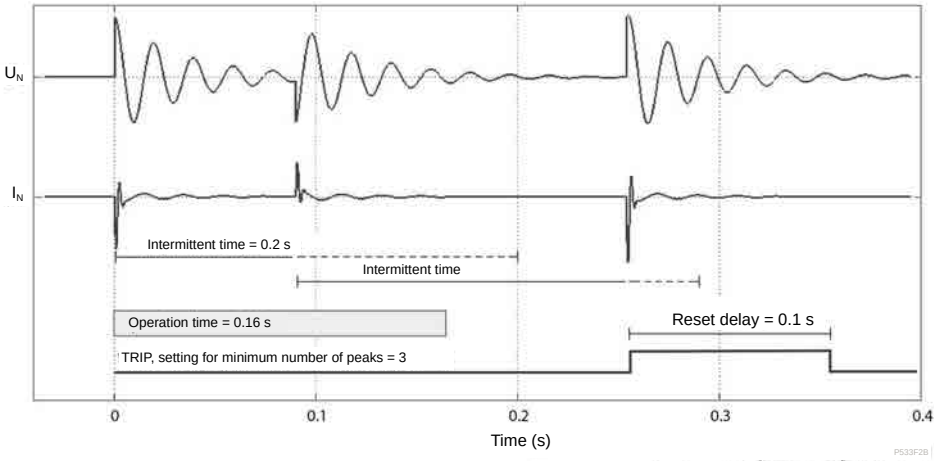


**Figure 289 - Peak amount condition is satisfied but intermittent time elapses before operate time. Stage is reset.**

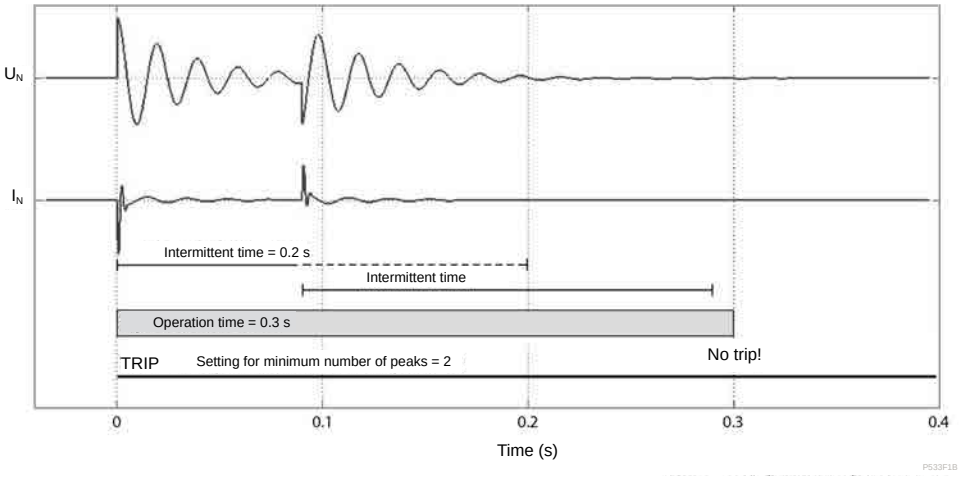

# Characteristics

**Table 99 - Settings and characteristics of the transient intermittent earth/ground fault protection stage IN.int>**

| Settings/characteristics (description/label) | Values |
|---|---|
| **IN input** | |
| Options | IN peak, IN.CSH peak , IN.sens peak |
| **Direction mode/Mode** | |
| Options | Forward; Reverse |
| **IN peak value/INPeak** | |
| Value | 0.1 pu[119] (fixed) |
| **VN Pick-up/VN>** | |
| Setting range | 0.01...0.60 pu[120] |
| Resolution | 1% pu[120] |
| Accuracy | ±3% |
| Reset ratio | 97% ± 2% |
| **Min number of peaks/MinPeaks** | |
| Setting range | 1...20 |
| Resolution | 1 |
| **Operate delay/t>** | |
| Setting range | 0.00...300.00 s |
| Resolution | 0.02 s |
| Accuracy | ±1% or ±20 ms |
| **Reset delay/Rst delay** | |
| Setting range | 0.06...300.00 s |
| Resolution | 0.01 s |
| **Intermittent time/Intmt time[121]** | |
| Setting range | 0.01...300.00 s |
| Resolution | 0.01 s |
| **Characteristic times** | |
| Start time | < 50 ms (45 ms with high speed) maximum |
| Disengaging time | < 65 ms |
| **Setting group** | |
| Number | 4 |

119. Inom for IN.calc; IN.nom for IN.meas; IN.sens.nom for IN.sens.meas; IN.CSH.nom for IN.CSH
120. √3 x VT primary nominal (PN)
121. Common setting for setting group 1, 2, 3, 4.

# 5th harmonic (H5) detection (ANSI 68H5)

## Description

Overexciting a transformer creates odd harmonics. The fifth harmonic component can be used to detect overexcitation. This stage can also be used to block some other function stages.

The ratio between the fifth harmonic component and the fundamental frequency component is measured on all the phase currents. When the ratio in any phase exceeds the setting value, the stage activates a start signal. After a settable delay, the stage operates and activates a trip signal.

It is recommended to set the trip delay to longer than 60 ms, to block properly the protection stages.

## Block diagram

**Figure 290 - Block diagram of the 5th harmonic detection stage Ih5>**

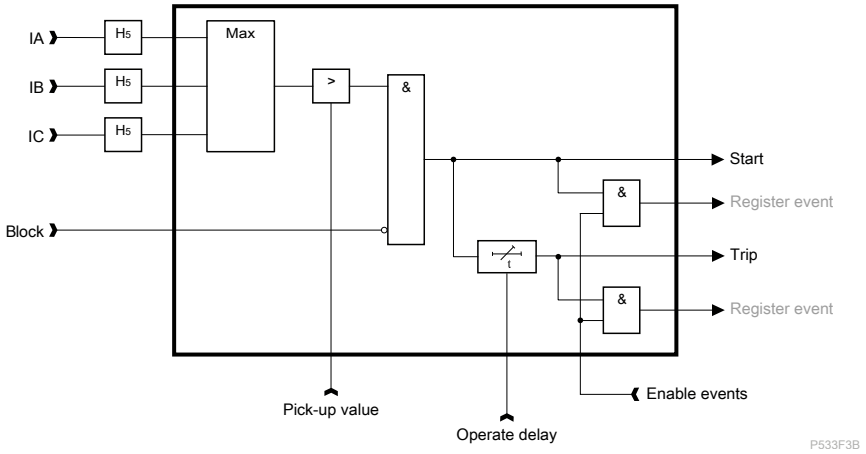


## Characteristics

**Table 100 - Setting and characteristics of the 5th harmonic detection stage Ih5>**

| Setting/characteristics (description/label) | Values |
|---|---|
| **Pick-up value/Pick-up value** | |
| Setting range | 10%...100% |
| Resolution | 1% |
| Accuracy | ±1% or ±0.005 Inom |
| Reset ratio | 97% ± 1% |
| **Operate delay/Operate delay** | |
| Setting range | 0.03...300.00 s |
| Resolution | 0.01 s |
| Accuracy | ±1% or 30 ms |
| **Characteristic times** | |
| Start time | < 55 ms (50 ms with high speed) |
| Disengaging time | < 70 ms (85 ms with high speed) |

**Table 100 - Setting and characteristics of the 5th harmonic detection stage Ih5> (Continued)**

| Setting/characteristics (description/label) | Values |
|---|---|
| **Setting group** | |
| Number | 1 |

# Auto-recloser function (ANSI 79)

## Description

The auto-recloser (AR) function (ANSI code 79) can be used in feeder protection relays to help protect an overhead line.

The function uses the object control function to control the CB open/close sequence. All other object control methods are in simultaneous use, including object failure monitoring. If the circuit breaker (CB) control fails or another function controls the CB, the AR sequence stops.

## Purpose

Typically protection functions detect the fault and trigger the AR function. After tripping the circuit breaker, the AR function can reclose the CB. Normally, the first reclose (or shot) is so short in time that users cannot notice anything. However, the fault is cleared and the feeder will continue in normal service.

## Auto-recloser principle

Even though the basic principle of AR is very simple, there are a lot of different timers and parameters that have to be set.

The PowerLogic P5 protection relays provide auto-reclosing with up to five shots. A shot consists of open time (so called “dead” time) and closed time (so called “burning” time or discrimination time). A high-speed shot means that the dead time is less than one second. The time-delayed shot means longer dead times up to two to three minutes.

There are four AR lines. A line means an initialisation signal for AR. Normally, start or trip signals of protection functions are used to initiate an AR sequence. Each AR line has a priority. AR1 has the highest and AR4 has the lowest priority. This means that if two lines are initiated at the same time, AR follows only the highest priority line. A very typical configuration of the lines is that the instantaneous overcurrent stage initiates the AR1 line, time-delayed overcurrent stage the AR2 line and earth/ground fault protection will use lines AR3 and AR4.

**Figure 291 - Auto-reclose matrix**

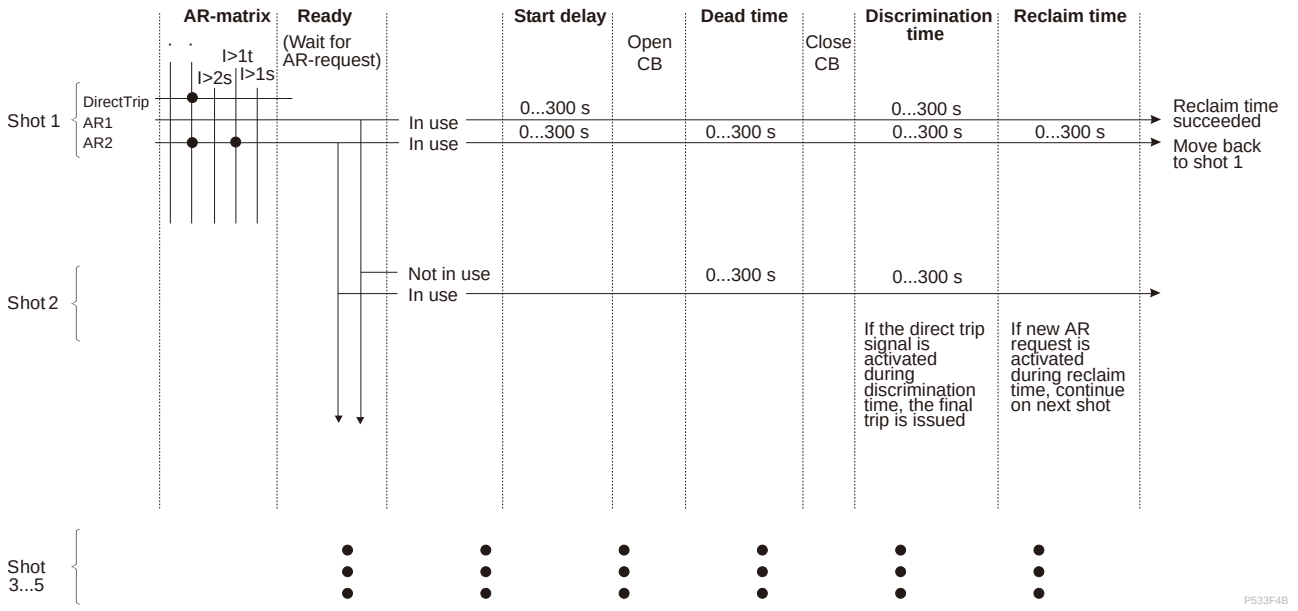

The AR matrix above defines which signals (the start and trip signals from protection stages or digital input) are forwarded to the AR function. In the AR function, the AR signals can be configured to initiate the reclose sequence. Each shot from 1 to 5 has its own enabled/disabled flag. If more than one AR signal activates at the same time, AR1 has highest priority and AR5 the lowest. Each AR signal has an independent start delay for the shot 1. If a higher priority AR signal activates during the start delay, the start delay setting will be changed to that of the highest priority AR signal.

After the start delay, the CB is opened if it is still closed (i.e. if no trip has been issued from another protection function in the mean time). When the CB opens, a dead time timer is started. Each shot from 1 to 5 has its own dead time setting. When dead time elapses, the reclose command is sent to the breaker and the reclaim time is started. If the reclaim time elapses with no further starting or tripping, the AR sequence is successfully executed and the AR function moves to ready state and waits for a new AR request in shot 1.

It is recommended to configure the protection stage start signal to initiate the AR function. A trip signal from the protection stage can be used as a backup. If AR does not issue the open command, the protection trip signal still operates the CB. The delay setting of the protection stage should be longer than the AR start delay, CB operation time and protection reset time.

# Operation

## Manual closing

When CB is closed manually with the local panel, by remote, or with digital inputs, the reclaim state is activated. Within the reclaim time, all AR requests are rejected. The protection stages take care of tripping when they are connected to a trip relay in the output matrix.

## Manual opening

Manual CB open command during AR sequence stops the sequence and leaves the CB open.

## Reclaim time setting

- Use shot-specific reclaim time: No

  This reclaim time setting defines reclaim time between different shots during a sequence and also the reclaim time after manual closing.
- Use shot-specific reclaim time: Yes

  This Reclaim time setting defines the reclaim time only for manual control. The reclaim time between different shots is defined by shot-specific reclaim time settings.

## Support for two circuit breakers

The AR function can be configured to handle two controllable objects. Object 1 – 6 can be configured to CB1 and any other controllable object can be used as CB2. The object selection for CB2 is made with the **Breaker 2 object setting**. Switching between the two objects is done with a digital input, virtual input, virtual output or by choosing **Auto CB selection**. AR controls CB2 when the input defined by the **Input for selecting CB2** setting is active (except when using auto CB selection when operated CB 1 or 2 is that which was last in closed state). Control is changed to another object only if the current object is not closed.

## AR shots blocking

Each AR shot can be blocked with a digital input, virtual input or virtual output. The blocking input is selected with the Block setting. When the selected input is active, the shot is blocked. A blocked shot is treated like it does not exist and AR sequence skips it. If the last shot in use is blocked, any AR request during reclaiming of the previous shot causes the final tripping.

## Starting AR sequence

Each AR request line has its own start delay timer. That AR line that is selected depends on which starting delay elapses first. If more than one delay elapses at the same time, the AR request of the highest priority is selected. AR1 has the highest priority and AR5 has the lowest priority. First shot is selected according to the AR request. Next AR opens the CB and starts counting dead time.

## AR shot 2-5 starting or skipping

Each AR request line can be enabled to any combination of the five shots. For example, making a sequence of Shot 2 and Shot 4 for AR request 1 is done by enabling AR1 only for those two shots.

**NOTE:** If AR sequence is started at shot 2 - 5, the starting delay is taken from the discrimination time setting of the previous shot. For example, if Shot 3 is the first shot for AR2, the starting delay for this sequence is defined by discrimination time of Shot 2 for AR2.

## Direct trip AR request

A direct trip AR request stops the AR sequence and causes final tripping. The direct trip request is ignored when the AR sequence is not running. The direct trip request is accepted during dead time and discrimination time.

## Shot active matrix signals

When a start delay has elapsed, an active signal is set for the first shot. If successful reclosing is executed at the end of the shot, the active signal is reset after the reclaim time. If the reclosing was not successful or a new fault appears during the reclaim time, the active signal is reset for the current shot and an active signal is set for the next shot (if there are any shots left before the final trip).

## AR running matrix signal

This signal indicates dead time. The signal is set after CB is opened. When dead time ends, the signal is reset and CB is closed.

## Final trip matrix signals

There are five final trip signals in the matrix, one for each AR request (1 to 4 and 1 direct trip). When a final trip is generated, one of these signals is set according to the AR request which caused the final tripping. The final trip signal stays active for 0.5 seconds and then resets automatically.

## DI to block AR setting

This setting is useful with an external synchro-check device. This setting only affects re-closing the CB. Re-closing can be blocked with a digital input, virtual

input or virtual output. When the blocking input is active, CB is not closed until the blocking input becomes inactive again. When blocking becomes inactive, the CB is immediately closed providing the close command is still active.

**Figure 292 - Example sequence of two shots (after shot 2 the fault is cleared)**

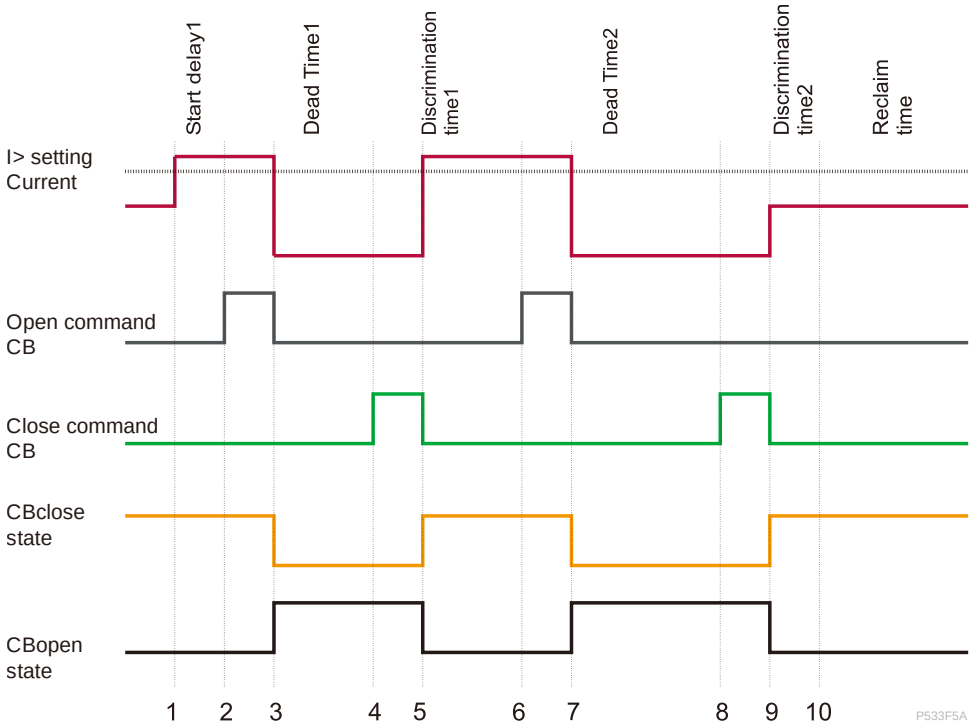


1. The current exceeds the I> setting; the start delay from shot 1 starts.
2. After the start delay, an OpenCB relay output is operated.
3. The CB opens. The dead time from shot 1 starts, and the OpenCB relay output resets.
4. The dead time from shot 1 elapses; a CloseCB output is operated.
5. The CB closes. The CloseCB output resets, and the discrimination time from shot 1 starts. The current is again above the I> setting.
6. The discrimination time from the shot 1 elapses; the OpenCB relay output is operated.
7. The CB opens. The dead time from shot 2 starts, and the OpenCB relay output resets.
8. The dead time from shot 2 runs out; the CloseCB output is operated.
9. The CB closes. The CloseCB output resets, and the discrimination time from shot 2 starts. The current is now below I> setting.
10. Reclaim time starts. After the reclaim time elapsed the AR sequence is successfully executed. The AR function moves to wait for a new AR request in shot 1.

# Characteristics

**Table 101 - Setting and characteristics of the auto-recloser protection function (ANSI 79)**

| Setting/characteristics (description/label) | Values |
|---|---|
| **Enable auto reclosing/Enable auto reclosing** | |
| Options | On; Off |
| **DI for AR on/off/DI for AR on/off** | |
| Options | Selection of one digital input (DI), one virtual input (VI), one virtual output (VO), or one function key. |
| **CB1 object/CB1 object** | |
| Options | Obj1; Obj2; Obj3; Obj4; Obj5; Obj6 |
| **CB2 object/CB2 object** | |
| Options | Obj1; Obj2; Obj3; Obj4; Obj5; Obj6 |
| **Auto CB selection/Auto CB selection** | |
| Options | Disable; Enable |
| **DI to select CB2/DI to select CB2** | |
| Options | Selection of one digital input (DI), one virtual input (VI), one virtual output (VO), or one function key. |
| **Dead time/Dead time** | |
| Setting range | 0.01...1,200.00 s |
| Resolution | 0.01 s |
| **Discrimination time/Discrimination time** | |
| Setting range | 0.02...300.00 s |
| Resolution | 0.01 s |
| **Reclaim time/Reclaim time** | |
| Setting range | 0.02...3,000.00 s |
| Resolution | 0.01 s |
| **DI to block sync check/DI to block sync check** | |
| Options | Selection of one digital input (DI), one virtual input (VI), one virtual output (VO), or one function key. |
| **Shot reclaim time/Shot reclaim time** | |
| Options | On; Off |
| **AR info for mimic display/ShowInfo** | |
| Options | On; Off |

# Overfrequency (ANSI 81O)

## Description

Frequency deviations result from an imbalance between power generation and power loads. An over frequency condition happens when the power generation exceeds the power loads, which maybe is due to a sudden removal of load due to tripping of an outgoing feeder. The sustained over frequency condition may damage the power generators. Normally the governor system would respond quickly and restore normal frequency. Over frequency protection is required as a back-up for generator overspeed. Also, over frequency protection is also applied in load restoration schemes to detect that the power system frequency has recovered sufficiently to allow load which had previously been shed to be reconnected.

So, the over frequency protection function (ANSI code 81O) is used for load restoration, and as a backup protection for overspeeding.

Whenever the frequency reaches the pick-up value of a particular stage, this stage starts, and a start signal is issued. If the fault remains on longer than the operating delay setting, a trip signal is issued.

**Figure 293 - Status change of overfrequency protection (Gs: frequency setting)**

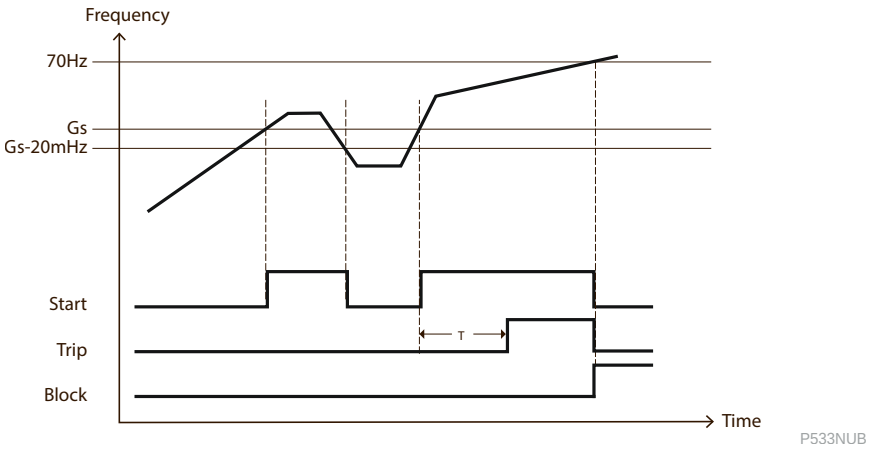


## Self blocking at low voltage

The protection is blocked when the positive sequence voltage is lower than the setting threshold. This feature is common to all the groups and stages of ANSI 81O, ANSI 81U and ANSI 81R functions, yet with individual threshold settings.

**Figure 294 - Low voltage block logic**

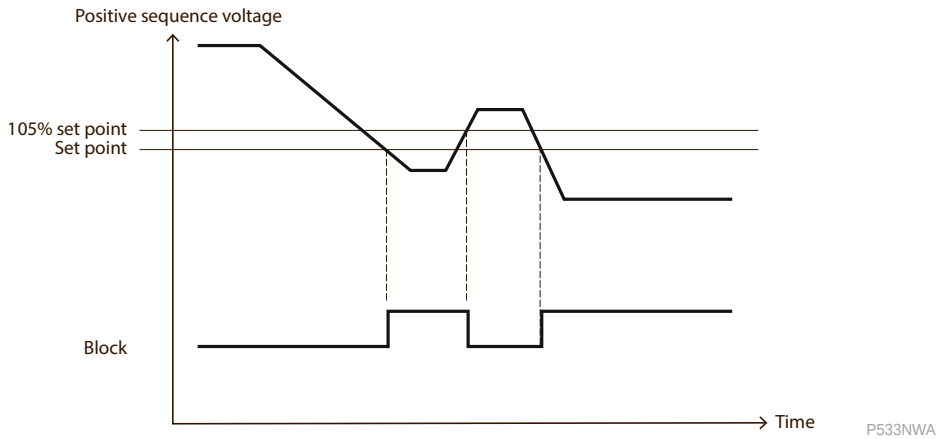


## Two independent stages

There are two separately adjustable stages: f>1 and f>2. All the stages have definite operate time (DT).

# Block diagram

**Figure 295 - Block diagram of the overfrequency protection (ANSI 81O)**

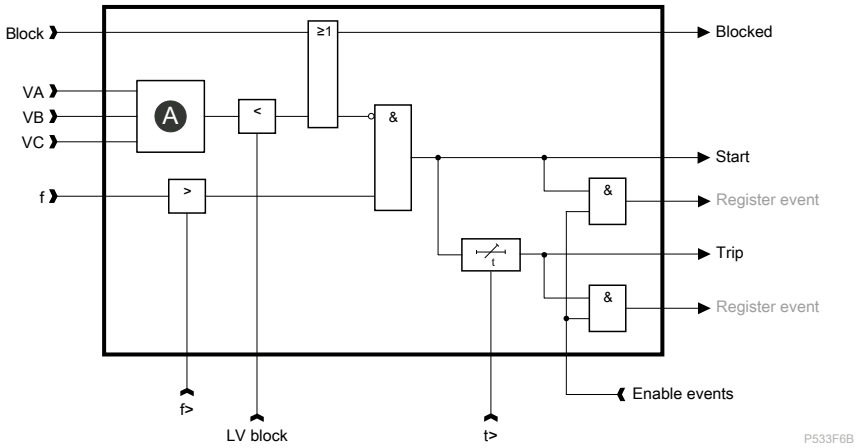


A Positive Sequency voltage

# Characteristics

**Table 102 - Setting and characteristics of the overfrequency protection stages f>1 and f>2**

| Setting/characteristics (description/label) | Values |
|---|---|
| **Pick-up value/f>** | |
| Frequency protection operation range | 35...70 Hz |
| Setting range | 40.00...65.00 Hz |
| Resolution | 0.01 Hz |
| Accuracy | ±0.01 Hz |

**Table 102 - Setting and characteristics of the overfrequency protection stages f>1 and f>2 (Continued)**

| Setting/characteristics (description/label) | Values |
|---|---|
| Hysteresis | 0.02 Hz ± 0.005 mHz |
| **Operate delay/t>** | |
| Setting range | 0.00...7200.00 s |
| Resolution | 0.01 s |
| Accuracy | ±1% or ±10 ms |
| **Low voltage blocking/LV block** | |
| Setting range | 0.10...1.00 pu[122] |
| Resolution | 1% |
| Accuracy | ±5% or ±0.5V (secondary) |
| Reset ratio | 105% |
| **Characteristic times** | |
| Start time | < 110 ms (105 ms with high speed), typically 80 ms |
| Disengaging time | < 120 ms (135 ms with high speed) |
| Overshoot time | < 70 ms |
| **Voltage measurement range** | |
| Minimum value | Vmin = 0.30 pu |
| Maximum value | Vmax = 2.20 pu |
| **Setting group** | |
| Number | 4 |

122. Vnom/√3 = VT primary nominal (PN)

# Underfrequency (ANSI 81U)

## Description

Frequency deviations result from an imbalance between power generation and power loads. An under frequency condition happens when the power load exceeds the available power generation. This happens when an interconnected system splits, and the load left connected to one of the subsystems is in excess of the capacity of the generators. Sustained under frequency has implications on the stability of the power system, whereby any subsequent disturbance may damage equipment and even lead to blackouts. It is therefore usual to provide protection for under frequency conditions and the related load-shedding scheme shall be deployed to restore the normal frequency.

So, the under frequency protection function (ANSI code 81U) is used for detection of an abnormally low frequency compared to the rated frequency to monitor power supply quality. The protection may be used for overall tripping or load shedding.

Whenever the frequency reaches the pick-up value of a particular stage, this stage starts, and a start signal is issued. If the fault remains on longer than the operating delay setting, a trip signal is issued.

**Figure 296 - Status change of underfrequency protection (Gs: frequency setting)**

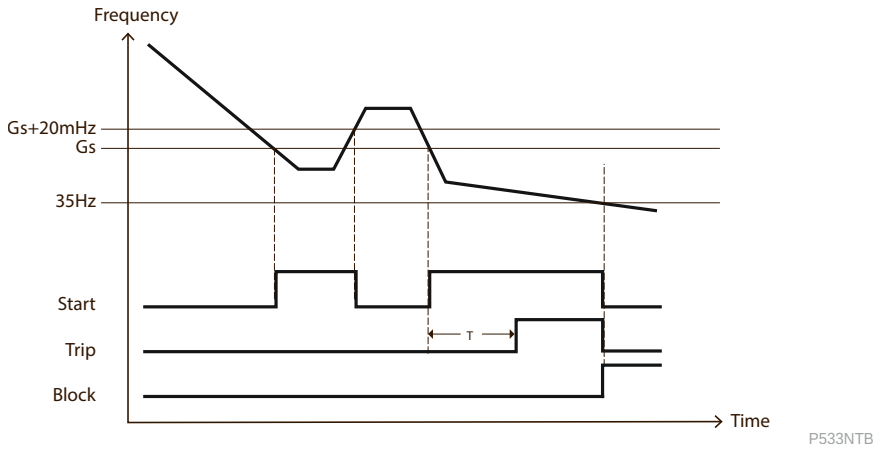


## Self blocking at low voltage

The protection is blocked when the positive sequence voltage is lower than the setting threshold. This feature is common to all the groups and stages of ANSI 81O, ANSI 81U and ANSI 81R functions, yet with individual threshold settings. See Low voltage block logic.

## Large df/dt block

The protection is blocked when the rate of change of frequency df/dt is larger than the setting threshold. The measured df/dt here shall not depend on any setting in ROCOF protection function.

**Figure 297 - Large df/dt block logic**

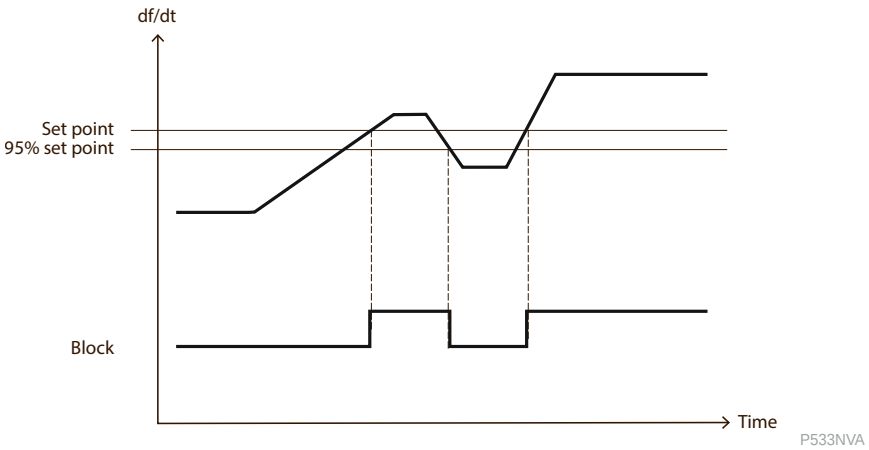


## Eight independent stages

There are eight separately adjustable stages: f<1, f<2...f<8. All the stages have definite operate time (DT).

# Block diagram

**Figure 298 - Block diagram of the underfrequency protection function (ANSI 81U)**

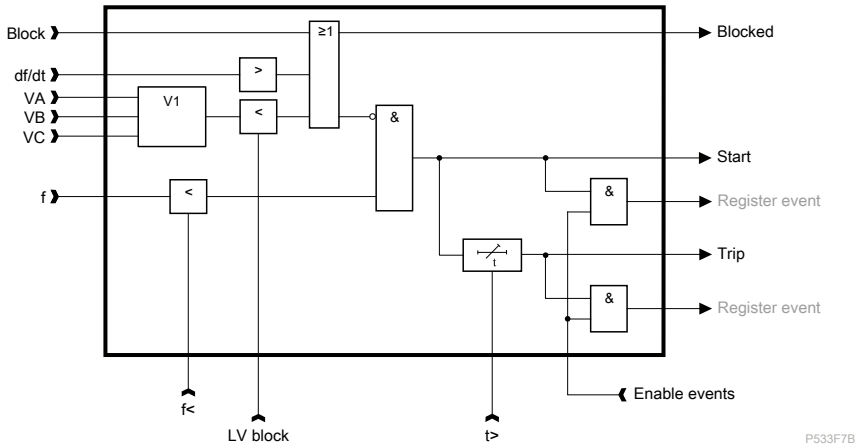


# Characteristics

**Table 103 - Setting and characteristics of the underfrequency protection stages f<1, f<2...f<8**

| Setting/characteristics (description/label) | Values |
|---|---|
| **Pick-up value/f<** | |
| Frequency protection operation range | 35...70 Hz |
| Setting range | 40.00...65.00 Hz |
| Resolution | 0.01 Hz |
| Accuracy | ±0.01 Hz |
| Hysteresis | 0.02 Hz ± 0.005 Hz |

**Table 103 - Setting and characteristics of the underfrequency protection stages f<1, f<2...f<8 (Continued)**

| Setting/characteristics (description/label) | Values |
|---|---|
| **Operate delay/Operate delay** | |
| Setting range | 0.00...7200.00 s |
| Resolution | 0.01 s |
| Accuracy | ±1% or ±10 ms |
| **df/dt blocking** | |
| Setting range | 0.10...20.00 Hz/s |
| Resolution | 0.01 s |
| Accuracy | ±5% or 0.050 Hz/s |
| Hysteresis | 5% or 0.05 Hz/s |
| **Low voltage blocking/LV block** | |
| Setting range | 0.10...1.00 pu[123] |
| Resolution | 1% |
| Accuracy | ±5% or ±0.5V (secondary) |
| Reset ratio | 105% |
| **Characteristic times** | |
| Start time | < 110 ms (105 ms with high speed), typically 80 ms |
| Disengaging time | < 100 ms (115 ms with high speed) |
| Overshoot time | < 70 ms |
| **The voltage measured range** | |
| Minimum value | Umin = 30 V |
| Maximum value | Umax = 220 V |
| **Setting group** | |
| Number | 4 |

123. Vnom/√3 = VT primary nominal (PN)

# Rate of change of frequency (ANSI 81R/81FR)

## Description

Frequency deviations result from the imbalance between the power generation and power loads. The Rate of Change of Frequency (RoCoF) is depending on the system inertia, severity of electric power unbalance, system damping constant and various other parameters. Sometimes the significant electric power deficiency in the separated subsystem (islanding condition) could cause a large frequency decay in a short time. If corrective measures (such as load shedding) are not taken quickly, the frequency may drop below the minimum system operating level and cause a widespread network collapse.

Compared with the underfrequency protection (ANSI 81U), the protection based on RoCoF can forecast a severe frequency decay and trigger fast corrective measures before the frequency drops to below the minimum system operating level.

So, the RoCoF protection function is normally used along with underfrequency protection in order to trigger load shedding where the frequency drops too fast. It can also be used to detect loss of mains where local generation is suddenly disconnected from the power system. The calculation of the rate of change of frequency is based on the positive sequence voltage.

The RoCoF protection in PowerLogic P5 can operate as independent rate of change of frequency protection, as frequency supervised rate of change of frequency protection or as regular under/over frequency protection. The selection is made with Operating mode and Direction mode settings which are independent for each one of 9 stages.

- If Direction mode is “Negative” and Operating mode is "f+RoCoF", it is underfrequency supervised RoCoF protection
- If Direction mode is “Positive” and Operating mode is "f+RoCoF", it is overfrequency supervised RoCoF protection
- If Direction mode is “Either”, it is RoCoF protection
- If Direction mode is “Negative” and Operating mode is "Frequency", it is underfrequency protection
- If Direction mode is “Positive” and Operating mode is "Frequency", it is overfrequency protection

RoCoF stage can be used as underfrequency protection by applying "Frequency" mode.

**NOTE:** If set direction mode to “Either”, please set operating mode to “f +RoCof” firstly, to avoid dependency confusion.

## Self blocking at low voltage

The protection is blocked when the positive sequence voltage is lower than the set undervoltage blocking threshold.

## Self blocking at frequency out of range

The protection is blocked when the measured frequency is out of the range 35...70 Hz.

## df/dt blocking

The protection is blocked when the measured rate of change of frequency df/dt is bigger than the set df/dt blocking limit. To ensure the RoCoF is safely blocked, a short time delay such as 50 ms is suggested.

# Block diagram

**Figure 299 - RoCoF function structure overview**

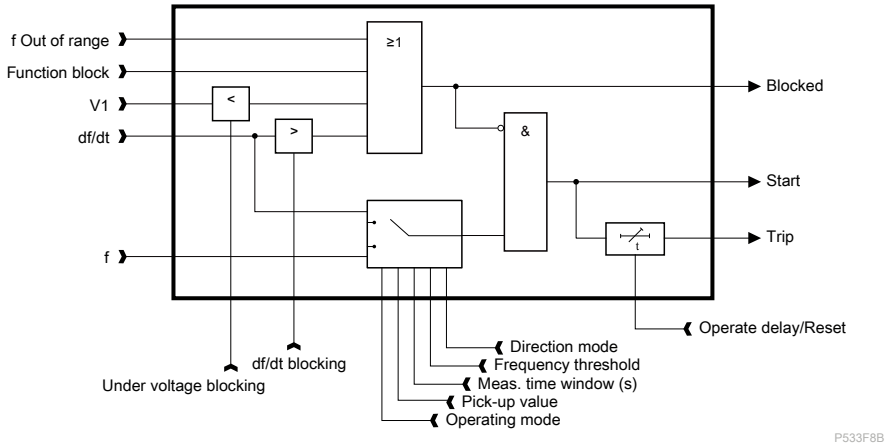


# Characteristics

**Table 104 - Setting and characteristics of the rate of change of frequency protection stages**

| Settings/characteristics (description/label) | Values |
|---|---|
| **Direction mode/Direction mode** | |
| Options | Negative; Positive; Either |
| **Operating mode/OpMod** | |
| Options | f+RoCoF; Frequency |
| **Pick-up value/Pick-up value** | |
| Settable df/dt window ΔT | 0.05...1.00 s, default 50 ms, step 5 ms |
| Setting range | 0.1...10.0 Hz/s |
| Resolution | 0.1 Hz/s |
| Accuracy | < 0.05 Hz/s if df/dt < 5 Hz/s;<br>±2% if df/dt < 5 Hz/s; |
| Hysteresis | 5% or 0.05 Hz/s |
| **Undervoltage blocking/LV block** [124] | |
| Setting range | 0.10...1.00 pu[125] |
| Resolution | 1% |
| Accuracy | Static voltage ±5% or ± 0.5 V (secondary) |
| Reset ratio | 105% |
| **df/dt blocking/BlkVal_dfdt** | |
| Setting range | 0.10...20.00 Hz/s |
| Resolution | 0.01 Hz/s |
| Accuracy | ±5% or 50 mHz/s for ΔT = 50 ms and up to 10 Hz/s |
| Hysteresis | 5% or 0.05 Hz/s |
| **Operate delay/Operate delay** | |
| Setting range | 0.00...100.00 s |

124. Common setting for setting group 1, 2, 3, 4.
125. Vnom/√3 = VT primary nominal (PN)

**Table 104 - Setting and characteristics of the rate of change of frequency protection stages (Continued)**

| Settings/characteristics (description/label) | Values |
|---|---|
| Resolution | 0.01 s |
| Accuracy | ±1% or ±10 ms |
| **Frequency threshold** | |
| Setting range | 40.00...65.00 Hz, Step 0.01 Hz |
| Accuracy | ± 10 mHz |
| Hysteresis | Gs + 20 mHz[126] |
| **Characteristic times** | |
| Start time | < 135 ms at 2 Gs[126] for df/dt > 0.1 Hz/s for ΔT = 50 ms<br>< 170 ms at 2 Gs[126] for df/dt = 0.1 Hz/s for ΔT = 50 ms |
| Disengaging time | < 180 ms for 2 Gs[126] to 0 and ΔT = 50 ms |
| **Setting group** | |
| Number | 4 |

126. Gs: frequency setting

# Lockout relay (ANSI 86)

## Description

The ANSI 86 function, traditionally performed by lockout relays, may be ensured by PowerLogic P5 protection relay using latching of output signals. The latched Global trip signal is used to inhibit any close order, until the cause of tripping disappears and is acknowledged by the user.

For this application, the Global trip signal or likewise any of the new General trip signals needs to be linked in latched mode to a changeover contact (for example, DO2 on slot B) in output matrix. Its NC contact (for example, terminals 12-13 for DO2 on slot B) has to be rooted into the close command circuit to interrupt it, as long as the DO is energised.

## Latch function

This feature can be programmed for outputs in the **MATRIX** menu/**Output matrix** sub-menu of the eSetup Easergy Pro. Any protection stage start or trip, digital input, logic output, alarm and GOOSE signal connected to the following outputs can be latched when required:

- Output contacts DOs
- LEDs on the local panel
- Virtual outputs VO1- VO20

**NOTE:** The latched signal is identified with a dot and circle in the matrix signal line crossing.

The latch can be released by the following methods:

- from the local panel with the R key.
- from the eSetup Easergy Pro.
- from a user configurable DI.

See Releasing latches, page 534 for more detailed information.

# Protection communication

## Introduction

The digital protection communication is an effective replacement to the traditional hardwired exchange of digital information between 2 protection relays inside substations or in different substations. It allows optimisation of the communication related requirements of speed, security and dependability, while minimising the amount of wiring between relays and providing comprehensive monitoring and status reporting of the communication link.

**Figure 300 - Protection communication between 2 P5 relays**

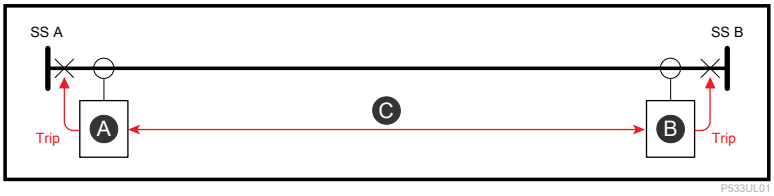


| | | | |
|---|---|---|---|
| A | Protection relay A | B | Protection relay B |
| C | Protection communication, transfer of digital data (start, trip, direction,...) | | |

## Configurations

### Address

The setting of address is made by eSetup Easergy Pro in **GENERAL**/**Optical fiber communication**, in section **Configuration**, selection of **Address**.

For two relays to communicate with one another either the universal address 00 or an address pair in the same group can be set. One relay shall be assigned with address A and the other with address B. For example, if the group 1 addresses are to be used, then one relay shall be set to address *1A* and the other relay shall be set to address *1B*.

A relay with address *1A* will only accept messages from a relay with address *1B*, and vice versa. That way a set up with inadvertently false communication addresses can be easily detected.

For all these address groups patterns are chosen to provide optimum noise immunity against bit corruption. There is no preference as to which address group is better than the other.

### Baud rate

The baud rate for communication between two relays is settable by eSetup Easergy Pro in **GENERAL**/**Optical fiber communication**, in section **Configuration**, selection of **Baud rate**.

There are three selectable values for P5F30, P5T30, P5M30: 56/64/115.2 kBit/s. There are two selectable values for P5L30: 115.2 kBit/s and 2 MBit/s.

> **NOTE:** 115.2 kBit/s cannot be used on long distances with 40km single-mode SFP (reference REL51043).

# Communication monitoring

## Alarms

Communication between the two relays is continuously monitored. Different type of alarms will be raised if no message is received within due time or if too many faulty messages are received within a defined time window.

**Link failure alarm**

This alarm is raised if no valid message is received within a user set **Comm link fail time**.

Depending on user setting the alarm will be either automatically reset when the internal communication flag is reset, or only upon acknowledgement by user.

**Communication failure alarm**

This alarm means any of the set frame sync timers elapses and hence for any received signal the fallback mode gets active.

When receiving a next fully valid message, it will reset automatically, hence when all received signals were successfully updated with the information received from such valid message.

**Communication error alarm**

This alarm will be issued if too many faulty messages are received either within a given time window or based on a given number of received telegrams. If the percentage of received erroneous telegrams (based on the total number of telegrams received) exceeds a user set **Comm error alarm level**, the related Communication error alarm will be raised.

## Communication statistics

To aid the bit error evaluation of the communication link, InterRelay communication statistics are kept by the relay. The statistics records the number of errored messages detected and the number of valid messages received for the communications channel. The number of errored messages detected complies with ITU-T G.821.

The stored statistics data are:

- Valid messages: number of messages received which were OK/accepted.
- Errored messages: number of messages received but rejected.
- Errored seconds: number of seconds containing 1 or more errored messages. This is not updated for severely errored seconds.
- Lost messages: number of messages lost.
- Severely errored seconds: number of seconds containing ≥ 30% errored messages.
- Elapsed time since reset: the number of seconds since the communications error statistics were last reset.

The error statistics are automatically cleared on power-up. They can be cleared by eSetup Easergy Pro in **GENERAL**/**Optical fiber communication**:

- In **Statistics** section, after clicking the **Clear** button or buttons, the settings shall be written to the relay by clicking the **Write** button.
- In **Configuration** section, by clicking the **Reset** button besides the **Statistics reset command**, the settings will be written automatically.

# Characteristics

**Table 105 - Settings and characteristics of Protection communication**

| Settings/characteristics (description/label) | Values |
|---|---|
| Address | 00, 1A, 1B … 20A, 20B |
| Baud rate | For P5F30, P5T30, P5M30: 56 kBit/s, 64 kBit/s, 115.2 kBit/s |
| | For P5L30: 115.2 kBit/s, 2 MBit/s |
| Comm link fail time | 0.1…600.0 s |
| Comm error alarm level | 1%…100% |
| Comm link fail self-reset | Disabled/Enabled |
| Comm error self-reset | Disabled/Enabled |
| **Settings with line differential protection P5L30 only** | |
| Delay tolerance time | 200 ... 10000 µs |
| Propagation delay state | Disabled/Enabled |
| Maximum propagation delay | 1...50 ms |

# InterRelay (ANSI 85)

## Introduction

The InterRelay application is an effective replacement to the traditional hardwired exchange of digital information between 2 protection relays by using a serial communication link. It allows optimisation of the communication related requirements of speed, security and dependability, while minimising the amount of wiring between relays and providing comprehensive monitoring and status reporting of the communication link.

The InterRelay application is available for P5L, P5F, P5M and P5T only. The typical use cases are inter-substation communications for direct intertripping or permissive tripping, distance signaling, remote CB status indication, CBF backtrip, DEF signalling, load shedding and restoration. In some cases, the InterRelay signals may also be used in interlocking.

**NOTE:** The maximum length of Fibre Optic (FO) depends on the fitted FSP transceiver, see Slot L: Protection communication module with SDLC (references REL51053 and REL51043), page 99 for more details.

## InterRelay communication

The InterRelay communication is enabled/disabled and configured by eSetup Easergy Pro in **PROTECTION**/**InterRelay communication**, 16 digital signals are transmitted within the message frame.

The meaning of these signals is freely user configurable, in the same way as for example output or LED configurations, it means configuration is done in matrix style (see next section). As typical examples, any start/trip/status signal of protection functions, switchgear open/close condition, or (timed) logic outputs are available through the configuration matrix.

Two modes of fallback are selectable in case a communication failure is detected: either keeping last valid value (*Latching*) or forcing default value (*Default*). This fallback mode gets active if the set **Frame sync time** elapses. This timer is re-triggered upon receiving a valid message. Because of different types of signals and related application needs, this timer is individually settable for each signal.

## Matrix

The InterRelay signals can be programmed in different matrix of PowerLogic P5:

- The InterRelay send signals (IROut 1…16) can be connected to any protection stages outputs, digital and virtual inputs etc.
- InterRelay received signals (IRIn 1…16) can be connected in all other matrices:
  - LED matrix: for the use of activating the Alarm LED, the trip LED, and the configurable LEDs on the local panel of PowerLogic P5
  - Blocking matrix: for the use of blocking any protection.
  - Object block matrix: for the use of blocking open/close operation of the controllable objects.
  - Auto-recloser matrix: to trigger final trip or an AR cycle.
  - General signals matrix: to link them into one of the general trip signals.

For the detail of matrix, please refer to Matrix, page 528.

# Characteristics

**Table 106 - Settings and characteristics of InterRelay function (ANSI 85)**

| Settings/characteristics (description/label) | Values |
|---|---|
| **Received signals IRn (n=1...16) related features** | |
| Frame sync time | 0.01…1.50 s |
| Fallback mode | Default/Latched |
| Default value | 0/1 |
| **InterRelay test settings** | |
| Loopback test mode | Yes/No |
| Test pattern | Any pattern of 16 digital signals with values 0 or 1. |
| Send signal value | 0/1 |
| Execute single signal test | Yes/No |
| **Communication** | |
| Refer to Protection communication, page 454. | |

# Line differential protection (ANSI 87L)

## Description

### General

The PowerLogic P5L30 line differential protection is based on a high-speed, phase segregated comparison of currents flowing at both ends of overhead lines or underground cables. The current measurements need to be exchanged between both line ends by use of a communication channel and must be time-aligned for proper comparison.

It operates with absolute selectivity, using a biased trip characteristic to prevent maloperation under adverse conditions (CT saturation during high through-flowing currents, neglected capacitive charging currents, angle error of current measurements, in-zone transformer with tap changer, and so on).

Based on the primary current comparison principle, the local and remote primary currents are permanently compared. In normal operation conditions or during external faults without CT saturation, the primary currents at both ends are practically the same, so the comparison result is almost zero. For faults on the protected line this comparison results in current differences which cause the protection trip. The zone of protection is precisely defined by the location of the current transformers.

**Figure 301 - Current differential protection principle**

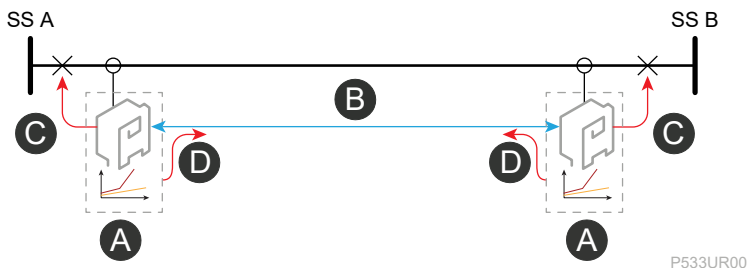


| | | | |
|---|---|---|---|
| A | PowerLogic P5 | B | Protection communication |
| C | Trip | D | Measured current values, transfer trip, and other digital data |

In some applications, a power transformer is in the line differential protection zone. For example, the industrial power infeed, with no HV-side CB for cost saving reasons. Additional settings for the power transformer (vector group, voltage ratio, grounding), adequate ranges for CT ratios, and related supplementary features (inrush detection, high-set unrestrained operation, overfluxing protection) are therefore also included in the line differential protection.

**Figure 302 - Current differential protection scheme including power transformer in protected zone**

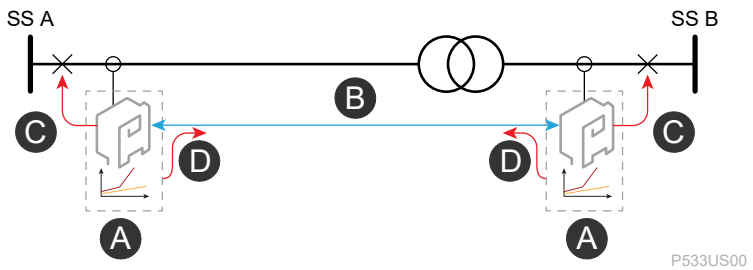

| | | | |
|---|---|---|---|
| A | PowerLogic P5 | B | Protection communication |
| C | Trip | D | Measured current values, transfer trip, and other digital data |

The differential and bias currents are added by default to the selection of disturbance recorder channels. For changing channels selection refer toDisturbance recording parameters (measurements and monitored values), page 563.

# Current measurement and preprocessing

## CT polarity

Differential protection function measures phase currents through different sets of CTs, which could be connected in standard way (common point toward protected object side) or in opposite way. This affects the sign of the measured current. Accordingly, settings are provided to adjust actual wiring to the function needs. For the CT orientation and polarity, please refer to Scaling settings, page 490.

## Time alignment

To calculate differential current between line ends it is necessary that the current samples from each end are taken at the same moment in time. PowerLogic P5L30 achieves this by the continuous calculation of the propagation delay between line ends.

As shown in the followed figure, consider two PowerLogic P5L30 relays at the end L and the end R being placed at the two ends of the line. Relay at the end L samples its current signals at time tL1, tL2..., and relay at the end R at time tR1, tR2...

**Figure 303 - Propagation delay measurement**

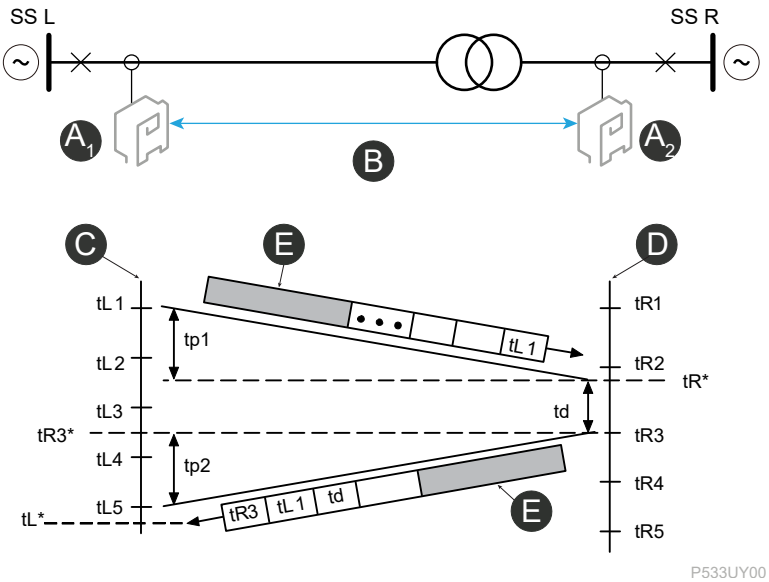


| | | | |
|---|---|---|---|
| $A_1$, $A_2$ | PowerLogic P5L30 at end L ($A_1$) and end R ($A_2$) | B | Protection communication |
| C | Measure sampling time:<br>tR3* = (tL – tp2) | D | Propagation delay time:<br>tp1 = tp2 = ½ (tL* - tL1 – td) |
| E | Current vectors | | |

Where:

- tL1, tL2, etc.: sampling instants of relay L.
- tR1, tR2, etc.: sampling instants of relay R.
- tp1: propagation delay time from relay L to R.
- tp2: propagation delay time from relay R to L.
- td: time between the arrival of message tL1 at relay R and dispatch of message tR3.
- tL*: arrival time of message tR3 at relay L.
- tR*: arrival time of message tL1 at relay R.
- tR3*: calculated sampling time of tR3 by relay L.

**NOTE:** The sampling instants at the two ends will not, in general, be coincidental or of a fixed relationship, due to slight drifts in sampling frequencies.

Assume that at time tL1, relay L sends a data message to relay R. The message contains a time tag, tL1, together with other timing and status information and the current vector values calculated at tL1. The message arrives at end R after a channel propagation delay time, tp1. Relay R registers the arrival time of the message as tR*.

Since relays L and R are identical, relay R also sends out data messages to end L. Assume relay R sends out a data message at tR3. The message therefore contains the time tag tR3. It also returns the time tag from latest received message from relay L (namely tL1) and the delay time, td, between the arrival time of the received message, tR*, and the sampling time, tR3, it means td = (tR3 - tR*).

The message arrives at end L after a channel propagation delay time, tp2. Its arrival time is registered by relay L as tL*. From the returned time tag, tL1, relay L can measure the total elapsed time as (tL* - tL1). This equals the sum of the propagation delay times tp1, tp2 and the delay time td at end R.

Therefore,

(tL* - tL1) = (td + tp1 + tp2)

The relay assumes that the transmit and receive channels follow the same path and so have the same propagation delay time. This time can therefore be calculated as:

tp1 = tp2 = ½(tL* - tL1 - td)

As the propagation delay time has now been deduced, the sampling instant of the received data from relay R (tR3*) can be calculated. As shown in the above figure, the sampling time tR3* is measured by relay L as:

tR3* = (tL* - tp2)

In the above figure, tR3* is between tL3 and tL4. To calculate the differential and bias currents, the vector samples at each line end must correspond to the same point in time. It is necessary therefore to time align the received tR3* data to tL3 and tL4. This can be achieved by rotating the received current vector by an angle corresponding to the time difference between tR3* and tL3 (and tL4). For example a time difference of 1 ms would require a vector rotation of 1/20 * 360° = 18° for a 50 Hz system.

The propagation delay is measured for each received message and displayed as part of the protection communication statistics. It is continuously monitored, and abnormalities are signaled by following alarms:

## Comm delay change

This alarm will be raised if the variation (the difference of consecutive propagation delays) exceeds the setting **Delay tolerance time**. As a stable transmission time is key for proper alignment of currents from both ends, correct calculation of differential and bias currents cannot be achieved in a secure manner under such time variations. Therefore, line differential protection gets temporarily blocked until a stable propagation time is detected again.

## Comm delay exceeded

This alarm is raised if the propagation delay exceeds the setting **Maximum propagation delay**. If the transmission time exceeds this limit, the validity of the current vector alignment is at stake, as compared currents are measured at very different times during the course of the fault. Line differential protection gets blocked as long as the propagation delay exceeds this limit.

# Magnitude alignment - CT ratio correction

For correct operation of the differential element, it is important that under load and through fault conditions, the currents compared by the differential element of the relay balance. There are many cases where CT ratios at each end of the differential protection are different.

For a healthy line, the sum of currents flowing in and out balance each other. That is true for primary currents, but as they are measured through secondary currents, CTs potentially different transformation ratios need to be considered. Ratio correction factors are therefore provided. With these the measured currents get scaled to a settable reference current.

- For a plain line protection application, this reference current must be set to the same value at both ends. It is recommended to use the average value of the CTs primary currents.

  Example:

  - CT(end L): 400/1 A
  - CT(end R): 200/1 A
  - set $I_{ref}$ = 300 A at both relays.
- For a line differential protection with in-zone transformer this reference current has to be set to different values at both ends, in accordance with the transformer (nominal) ratio.

  It is recommended to set the reference currents equal to the transformer nominal currents.

  Example: 10 MVA, 33/11 kV transformer with a nominal power of $S_{n.tr}$ = 10 MVA

  - $I_{ref}(33\ kV) = I_{n.tr}(33\ kV) = S_{n.tr} / (\sqrt{3} * 33\ kV) = 175\ A$
  - $I_{ref}(11\ kV) = I_{n.tr}(11\ kV) = S_{n.tr} / (\sqrt{3} * 11\ kV) = 525\ A$

    So, for a 200/1 A CT on 33 kV end the CT correction factor on that end will be 200/175 = 1.142.

    And for a 800/1 A CT on 11 kV end the CT correction factor on that end will be 800/525 = 1.523.

The current correction factors are calculated as the quotient of the primary CT value and the set reference current on each end:

$k_{corr} = I_{n.CT.pr} / I_{ref}$

- For proper quality of numerical data processing, the correction factor values are restricted to the following range:

  $0.500 \leq k \leq 10.000$

The measured phase currents at each end will be scaled to the reference current by multiplication with the correction factors:

$I_{P.corr} = k_{corr} * I_{P.meas}$

Where: P= A,B,C

These scaled currents will be transmitted to the remote end relay, together with the time information to allow for time alignment. In this way, both relays will have comparable values.

# Differential protection calculation

From these scaled currents the phase differential protection calculates two currents per phase:

- differential current: absolute value of the vector sum of local and remote currents.

  $I_{d.P} = | \underline{I}_{P.corr.local} + \underline{I}_{P.corr.remote} |$

- bias current: absolute value of the vector difference of local and remote current, divided by 2

  $I_{b.P} = ( | \underline{I}_{P.corr.local} - \underline{I}_{P.corr.remote} | ) / 2$

Where: P = A, B, C.

With this definition the currents during normal load condition will be:

- differential current = zero;
- bias current = load current.

By default, current differential protection operates in a phase-segregated way, it means differential and bias current for each phase ($I_{d.A}$,$I_{b.A}$), ($I_{d.B}$,$I_{b.B}$) and ($I_{d.C}$,$I_{b.C}$) are independently compared against the set characteristic.

As an alternative, the restraint mode can be set to higher stability. Then the maximum bias current from all 3 phases is applied to all 3 differential protection elements, it means ($I_{d.A}$,$I_{b.A}$), ($I_{d.B}$,$I_{b.B}$) .and ($I_{d.C}$,$I_{b.C}$) are compared against the characteristic with $I_{.b.max}$ = max( $I_{b.A}$, $I_{b.B}$, $I_{b.C}$ ).

## Trip characteristic

Basic operation condition of differential protection is the difference between the currents entering and leaving a protected zone. The protection operates when this difference exceeds a set threshold. Yet, as current differences can also result from various errors, differential protection adopts a biasing technique to prevent maloperation. This method effectively raises the differential current trip level in proportion to the value of through flowing current. The operating characteristics of the PowerLogic P5L30 phase differential element is shown in the image below.

**Figure 304 - Biased tripping characteristic**

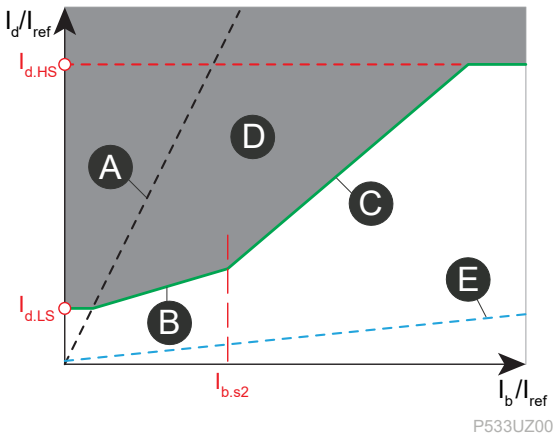


| | | | |
|---|---|---|---|
| A | Characteristic for single side fed fault = 200% slope | B | Slope 1 |
| C | Slope 2 | D | Trip |
| E | Angle error influence | | |

This triple-slope characteristic is determined by four settings:

- $I_{d.LS}$: The basic differential current setting which determines the minimum pick-up level of the relay.

  [default = 0.2 pu]

- s1 (Slope 1): The lower percentage bias setting used when the bias current is below $I_{b.s2}$. This provides stability for small CT mismatches, whilst ensuring good sensitivity to resistive faults under heavy load conditions.

  [default = 30%]
- $I_{b.s2}$: A bias current threshold setting, above which the higher percentage bias slope s2 is used.

  [default = 2 pu]
- s2 (Slope 2): The higher percentage bias slope setting used to improve relay stability under heavy through-flowing fault current conditions with potential CT saturation errors.

  [default = 70%]

The tripping criteria can be formulated as:

1. **For $I_b \leq 0.5 * I_{d.LS}$:** $I_d > I_{d.LS}$
2. **For $0.5 * I_{d.LS} < I_b \leq I_{b.s2}$:** $I_d > s1 * I_b + I_{d.LS} * (1 – 0.5 * s1)$
3. **For $I_b > I_{b.s2}$:** $I_d > s2 * I_b + I_{d.LS} * (1 – 0.5 * s1) + I_{b.s2} * (s1 – s2)$

A further high set unrestrained element $I_{d.HS}$ can be enabled to provide high-speed operation in the event of CT saturation. Its use is recommended for applications with in-zone current limiting elements, namely in-zone power transformers.

The differential protection can be delayed for a settable definite time, which should only be used if there are further in-zone protection zones, for example, fused tapped feeders connected to the protected line.

## Current release

The phase differential protection function is provided with an optional current release with a settable current threshold I>.

The current release function supervises all three phase currents. If enabled, the smallest of the three phase currents will be determined. The phase differential protection will be activated only if this smallest phase currents is higher than the set threshold. If the current value of all phase currents is below the configured threshold, phase differential protection will be forced to inactive state.

This current release function is active only if the phase differential protection is not in a starting state. When the phase differential function is active and in starting condition, the current supervision will not be executed any more.

## Phase comparison supervision

The CT saturation detection uses a phase comparison algorithm to supervise the current differential operation. The phase comparison algorithm provides immunity to CT saturation. It operates using the measured Fourier values on a phase by phase basis, but only if both currents are above the reference current value. If there is only one current above this threshold, the fault is considered internal if differential current is high enough.

Phase comparison confirms that a fault is either internal or external to the protected line. It is an additional operate criterion which allows the line differential algorithm to operate only if the fault is detected as internal. It runs independently in both relays within the line differential protection function.

On an external fault (with a saturating CT) which then evolves to an internal fault, phase comparison allows the trip even if the CT remains saturated. A trip will occur when the fault condition is detected as internal.

**Figure 305 - Example to illustrate the phase comparison algorithm**

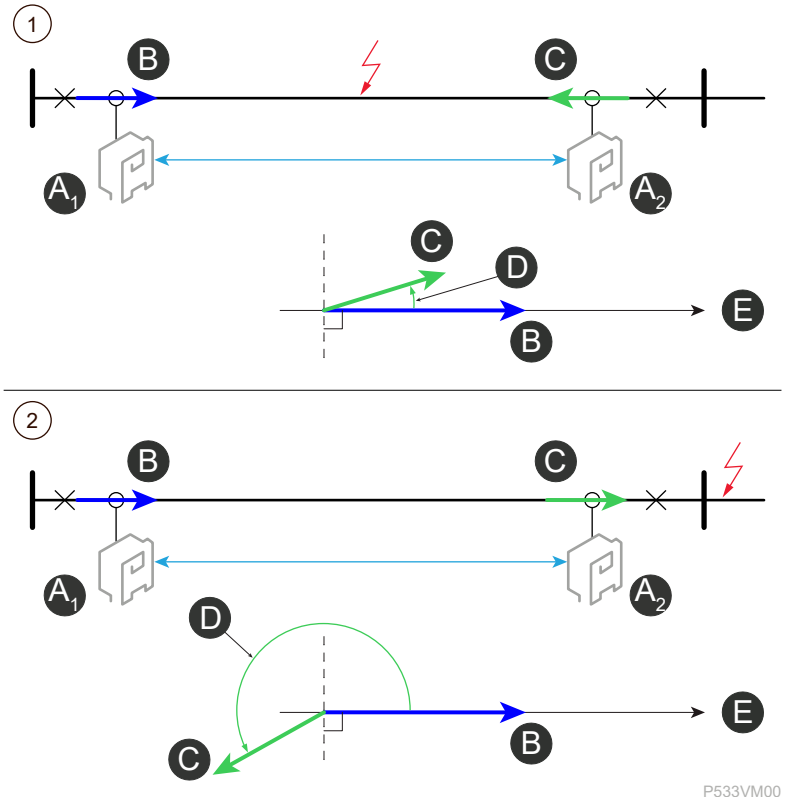


| | | | |
|---|---|---|---|
| 1 | \| φR - φL \| < 90° | 2 | \| φR - φL \| > 90° |
| | Internal fault confirmation | | External fault confirmation |
| $A_1$, $A_2$ | PowerLogic P5L30 at end L ($A_1$) and end R ($A_2$) | B | IL<br>φL = 0° |
| C | IR | D | φR |
| E | Measurement reference | | |

## Angle error supervision

In the design of time alignment of measurements, the propagation time for the differential protection communication in both ways is assumed to be equal. If that condition is not met, a differential current will be measured. As an example, an asymmetric propagation time of 333 µs will result in a ratio of differential current to through-flowing load current of about 10%. For various values of load currents, this will result in differential currents on an angle error slope at about 6°.

In order to detect such adverse condition, an angle error supervision is implemented (light blue characteristic in the image Biased tripping characteristic, page 463). If the calculated differential current is above that characteristic for a set time, a dedicated alarm signal will be issued.

## Intertripping

Below two types of intertrip signals are transmitted in each message frame.

### Direct intertrip (DIT)

When a trip is issued by the differential element of a relay , in addition to tripping the local breaker, the function will send a differential intertrip signal to the remote relay. To enhance security, receipt of such direct intertrip signal is accepted only if being in 2 consecutive message frames.

By default, it is linked to the CB trip output DO1(B) in the “Output” matrix. This will ensure tripping of remote end of the protected line, even for marginal fault conditions so that the differential protection on one end just does not pick up.

This DIT transfer and internal execution remains in service, even if the local differential protection is out of service. Therefore, a valid received DIT signal is still executed and can operate the digital outputs as per the configuration in the Output matrix.

This intertrip signal source is limited to the line differential protection function only. It is not available to transfer any trip from other protection functions. For such more general direct intertrip applications any of the available InterRelay signals can be used, or with the below permissive intertrip.

### Permissive intertrip (PIT)

The differential protection function further provides a permissive intertrip signal and functionality. This PIT signal is sent by default in case of a trip signal from the differential protection, but further trip signals from other protection functions can be configured in the “Output” matrix.

Upon receiving such PIT signal from the remote terminal, the differential protection function applies one of the following checks:

- None: The received PIT signal forces an unconditional local PIT trip signal (with reference to line differential same functions as DIT).
- Local: When receiving the PIT signal, a trip is issued if a local measured current is above the set threshold “PIT current”.
- Remote: When receiving the PIT signal, a trip is issued if the remote current (received from remote PowerLogic P5L30) is above set threshold “PIT current”.

If such permissive condition is fulfilled, the line differential protection will issue the permissive trip signal.

## CT supervision (CTS)

In general, the current transformer supervision feature is used to detect failure of one or more of the phase current inputs to the relay. Failure of a phase CT or an open circuit of the interconnecting wiring can result in incorrect operation of any current operated element. Additionally, interruption in the ac current circuits risks dangerous CT secondary voltages being generated.

Separate CTS functions supervising the phase currents at local end as well the differential currents are provided to alarm about such failure condition. Furthermore, they allow two modes of interaction with line differential protection function:

- Indication: CTS alarms have no effect on differential protection
- Blocking: The differential protection is blocked while CTS condition is present.
- Restraining: The minimum differential protection pick-up value is “shifted” vertically to a higher threshold (CTS $I_{d.LS}$) while CTS condition is present.

CTS condition signal is transmitted to the remote end device, to apply blocking or restraining there too, to prevent false operation.

**Figure 306 - Differential tripping characteristic with CTS restraining**

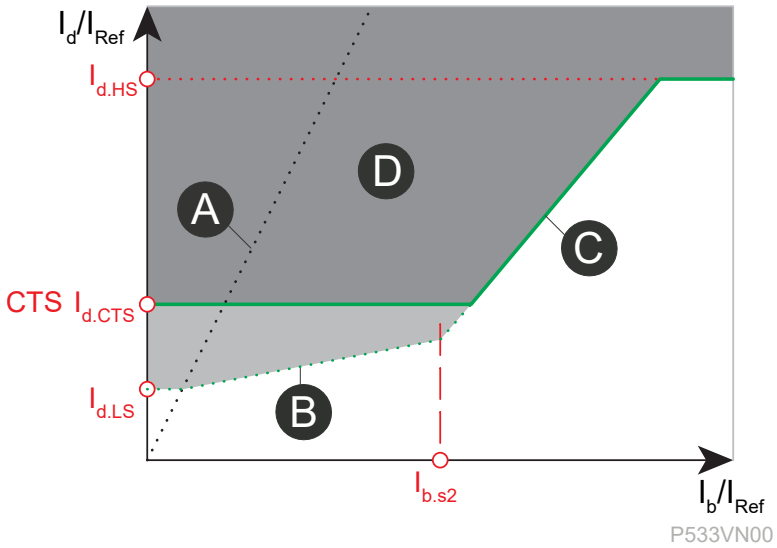


| | | | |
|---|---|---|---|
| A | Characteristic for single side fed fault = 200% slope | B | Slope 1 |
| C | Slope 2 | D | Trip |

## Compensation modes

So-called compensation modes can be enabled in line differential protection function to address specific items of the protected line. One of the 3 options below could be selected:

- None
- Capacitive charging currents
- In-zone power transformers

The details are given in the following sections.

**NOTE:** It is mandatory that the same compensation mode is set at both ends.

# Capacitive charging current compensation

The charging current of a line or cable can be seen as differential current. If this current is of a sufficiently high magnitude, as is the case for cables and long lines, then a relay maloperation could occur. Two issues are apparent with a charging current: the first being inrush during line energisation and the second being steady state charging current.

Inrush charging current is predominately high order harmonics (9th and 11th for example). The Fourier filtering used by the PowerLogic P5L30 relays will remove these frequency components and hence provide stability.

Steady state charging current is nominally at fundamental frequency and hence may cause relay maloperation.

As a basic mean, such differential current can be considered by adequate rise of the tripping characteristic ($I_{d.LS}$ and slope 1).

The best available option will be the capacitive charging current compensation. This feature derives the charging currents from the measured line voltages and subtract them from the measured currents before further calculating the differential and bias currents.

**NOTE:** If no measured voltage is available, the capacitive charging current compensation operates as if nominal voltage would be measured.

**Figure 307 - Capacitive charging current**

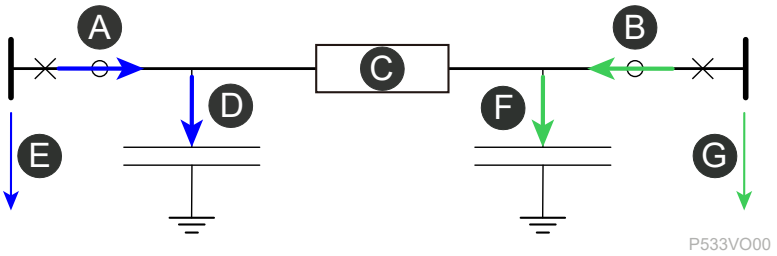


| | | | |
|---|---|---|---|
| A | IL: Left end line current | B | IR: Right end line current |
| C | ZLine: Line impedance | D | Icap.L: Left end charging current |
| E | VL: Left end voltage | F | Icap.R: Right end charging current |
| G | VR: Right end voltage | | |

The capacitive charging current level, related to the nominal voltage level of the protected line, is usually given in per unit value, typically in A/km. This value multiplied by the line length gives the line capacitive charging current $I_{cap.line}$ which is to be set when activating this compensation feature.

From that the capacitive charging current at each end is calculated per phase as ratio of actual measured phase voltage ($V_P$) to nominal voltage ($V_n$):

$I_{P.cap} = ½ * I_{cap.line} * ( \sqrt{3}\ V_P / V_n )$

Where: P = A,B,C.

**NOTE:** The same capacitive charging current has to be set on both relays.

This capacitive charging current then is considered (actually subtracted) in the differential and bias current calculation.

# Transformers in-zone application

In applying the well established principles of differential protection to transformers, a variety of considerations have to be taken into account. These include compensation for any phase shift across the transformer, possible unbalance of signals from current transformers either side of windings, and the effects of the variety of earthing/grounding and winding arrangements. In addition to these factors, which can be compensated for by correct application of the relay, the effects of normal system conditions on relay operation must also be considered. The differential element must restrain for system conditions which could result in maloperation of the relay, such as high levels of magnetising current during inrush conditions.

Basic details of features of the transformer and related settings are already described in Transformer differential protection (ANSI 87T), page 476. Therefore, this section provides just the list of provided features and the description of particularities.

Obviously, in such application the transformer compensation mode setting in the line differential protection function has to be enabled on both ends.

## CT ratio correction

When setting the reference currents of line differential protection, the nominal transformer ratio needs to be considered, it means nominal currents are inverse proportional to the nominal voltages, as detailed in Magnitude alignment - CT ratio correction, page 462.

It's recommended to set the reference currents of the line differential relays equal to the transformer nominal current.

The HV and LV current transformer primary ratings should be selected to match the transformer winding rated currents, so that the CT correction factors are as close as possible to 1. Numerical data processing accuracy imposes the need that they must be in a range of 0.5 to 10.0. Otherwise, differential protection gets blocked.

## Vector group compensation and zero-sequence current filtering

Selection of the phase angle compensation settings will be dependent on the phase shift (described by the vector group) of the power transformer. This phase correction is applied to each relay. A traditional way to compensate the phase shift was the use of interposing CTs (ICTs). Modern differential relays like PowerLogic P5L30 replicate such ICTs in software. This has the advantage of being able to cater for line CTs connected in either star as well as being able to cater for zero sequence current filtering. A typical application for an Yd1 power transformer is sketched in the image below:

**Figure 308 - Example of transformer vector group compensation**

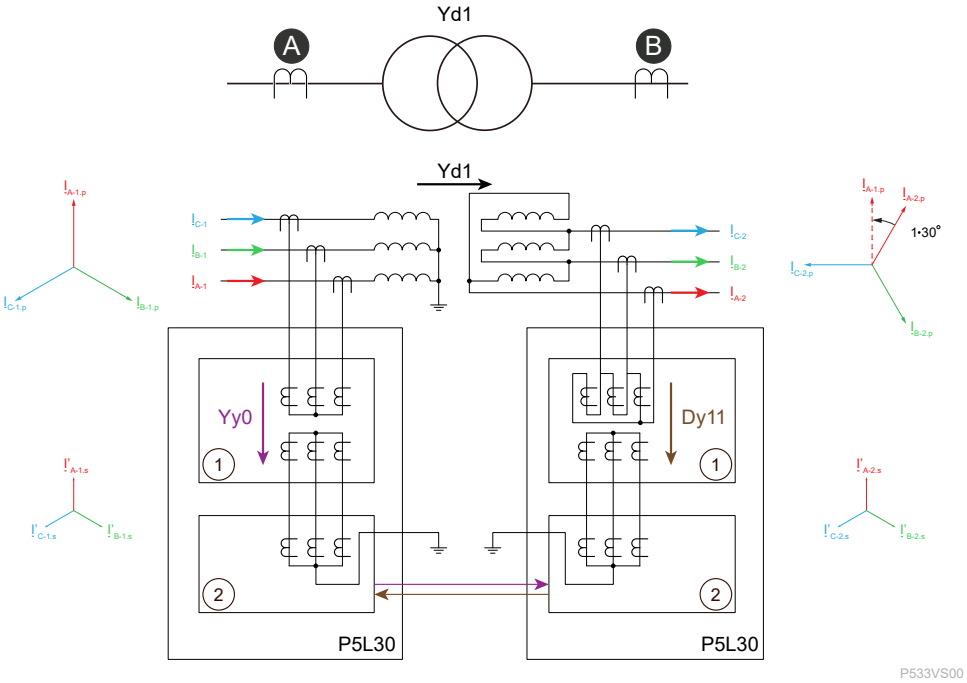


| | | | |
|---|---|---|---|
| A | CT-1 | B | CT-2 |
| 1 | ICT | 2 | Line DIFF |

To aid selection of the correct setting on the relay menu, most commonly used transformer configurations and the selection of related vector group settings are shown in the following table. Also, in the bottom lines (yellow marked) the generic rule is given.

As shown in the table, a delta winding is introduced with the Y side software ICT. This provides the required zero sequence trap, as would have been the case if the vector correction factor had been provided using an external ICT.

Whenever an in-zone earthing/grounding connection is provided, a zero-sequence trap should always be provided. For instance, if a YNyn power transformer is in the protected zone, there will be some difference between HV and LV zero sequence magnetising current of the transformer. This is normally small, but to avoid any problem with any application the above rule for zero sequence traps shall be applied with earthed/grounded windings.

**Table 107 - Selection of vector group settings**

| Trans-former connec-tion | Trans-former phase shift | Vectorial compensation (ICT) and vector group (vg) vector group and enabling I0–filtering are relay settings) | | | | | |
|---|---|---|---|---|---|---|---|
| | | HV | | | LV | | |
| | | ICT | vg | I0–filt. | ICT | vg | I0–filt. |
| Dy1 | -30° | Yy0 (0°) | 0 | no | Yd11 (+30°) | 11 | no |
| Dyn1 | | | | no | | | yes |
| Yd1 | | Yd1 (-30°) | 1 | no | Yy0 (0°) | 0 | no |
| YNd1 | | | | yes | | | no |
| Dy5 | -150° | Yy0 (0°) | 0 | no | Yd7 (+150°) | 7 | no |
| Dyn5 | | | | no | | | yes |
| Yd5 | | Yd5 (-150°) | 5 | no | Yy0 (0°) | 0 | no |
| YNd5 | | | | yes | | | no |
| Dy7 | +150° | Yy0 (0°) | 0 | no | Yd5 (-150°) | 5 | no |
| Dyn7 | | | | no | | | yes |
| Yd7 | | Yd7 (+150°) | 7 | no | Yy0 (0°) | 0 | no |
| YNd7 | | | | yes | | | no |
| Dy11 | +30° | Yy0 (0°) | 0 | no | Yd1 (-30°) | 1 | no |
| Dyn11 | | | | no | | | yes |
| Yd11 | | Yd11 (+30°) | 11 | no | Yy0 (0°) | 0 | no |
| YNd11 | | | | yes | | | no |
| Yy0 | 0° | Yy0 (0°) | 0 | no | Yy0 (0°) | 0 | no |
| YNy0 | | Ydy0 (0°) | | yes | Yy0 (0°) | | no |
| Yyn0 | | Yy0 (0°) | | no | Ydy0 (0°) | | yes |
| YNyn0 | | Ydy0 (0°) | | yes | Ydy0 (0°) | | yes |
| Dy vg | φ = vg * (-30°) | Yy0 (0°) | 0 | no | Yd (12 - vg) | 12 - vg | no |
| Dyn vg | | | | no | | | yes |
| Yd vg | | Yd vg | vg | no | Yy0 (0°) | 0 | no |
| YNd vg | | | | yes | | | no |

Where:

- vg = vector group = [0 … 11]
- Dy or Yd configurations have odd vector group numbers only
- Dd or Yy configurations have even vector group numbers only (only Yy0 in this table)

**NOTE:** This table applies for systems with clockwise phase rotation (A-B-C) only. In systems with anti-clockwise phase rotation (A-C-B) the complementary vector group (vg' = 12 - vg) has to be used instead of the vector group (vg) given on the transformer nameplate (and used in above table).

## High set differential current element

The optional high set differential protection element should be enabled for in-zone transformer applications. This is provided to ensure rapid clearance for heavy internal faults with saturated CTs. Because high set is not restrained the setting must be set such that it will not operate for the largest through-flowing currents expected. It is basically limited by the transformer reactance, commonly indicated as relative short-circuit voltage Vsc. The maximum through fault current for infinite

source at one end with nominal voltage will be then its inverse multiple of transformer nominal current, namely Itr.n / Vsc. For example, for Vsc = 10% the maximum through fault current is 10 times transformer nominal current. A safety margin of at least 20% should be added to this current value to cater for permissible higher system voltages and inaccuracies. Also, the difference between transformer nominal currents and set reference currents has to be considered.

## Inrush restraining or blocking

When energising a transformer from one end a magnetising inrush current flows into the energised winding. This current is not represented at the remote end. Therefore, inrush current detection and prevention from false tripping has to be considered.

As the maximum inrush current depends on the transformer size, a settable differential current limit (typically set above 120% of maximum expected inrush current) is provided to discriminate between such inrush condition and fault condition. If actual measured differential current exceeds that limit “Inrush current limit”, then inrush detection is disregarded.

As inrush takes place at one end only, the status of inrush detection per phase and the measured maximum inrush current are sent through the communication link to the remote device to prevent false differential operation there, too.

Two methods are provided to avoid trips on inrush current.

### Inrush restraining mode

The phase differential protection uses a settable multiple of the maximum second harmonic current value to add it to the bias current.

$Ib_{.add} = H2_{mult} * IH2_{max}$

Where:

- $Ib_{.add}$: current added to the bias current of each phase on both ends
- $H2_{mult}$: settable multiplier
- $IH2_{max}$: highest 2nd harmonic current = max ( $IH2_A$, $IH2_B$, $IH2_C$ )

The 2nd harmonic currents are calculated with Fourier filtering technique and the rms value of the highest current is sent through the communication link to the remote device.

**NOTE:** When this inrush restrain function is enabled, it must be ensured that this function is enabled at both ends to avoid possible maloperation.

### Inrush blocking mode

In this mode, the ratio of 2nd harmonic to fundamental current (IH2/IH1) is measured in each phase. Inrush decision is made if this ratio exceeds a set threshold.

Blocking can be set to be either phase selective or cross blocking operation. In the latter all 3 phase differential elements get blocked, if in at least one phase an inrush decision is made.

## Overflux blocking

When overfluxing occurs, the transformer core becomes partially saturated and the resultant magnetising current waveforms increase in magnitude and become harmonically distorted. Such waveforms have a significant fifth harmonic content which is used as a means of identifying the abnormal operating condition.

When this function is enabled, a settable fifth harmonic blocking threshold is provided to initiate overflux blocking. A typical threshold setting is 35%.

This blocking can be set to be either phase selective or cross blocking operation. In the latter all 3 phase differential elements get blocked, if in at least one phase an overflux condition is determined.

# Further considerations

## Back-up overcurrent protection

In case of line differential protection is blocked for any reason (most likely the loss of communication link), local back up overcurrent protection stage(s) can be automatically activated. For that purpose, a dedicated setting is provided in the phase and neutral overcurrent protection stages of the PowerLogic P5L30 relays. Refer to Negative sequence overcurrent (ANSI 46), page 330, Non-directional/directional phase overcurrent protection (ANSI 50/51/67), page 378 and Non-directional/directional earth/ground fault overcurrent (ANSI 50N/51N/67N), page 414 for detail.

To enable the back-up overcurrent protection, check **Back-up mode** in eSetup Easergy Pro/**PROTECTION**/**Negative sequence overcurrent 46** and **Phase overcurrent 50/51/67** and **Ground fault overcurrent 50N/51N/67N**.

## In-zone “Teed” Loads

Many rural feeders have small fuse protected loads tapped off the line within the zone of protection. In most cases the load is small enough to be ignored when setting the $I_{d.LS}$ threshold. The problem, however, is when a fault occurs downstream of the fuse. The current differential protection would assume the fault was on the feeder, instead of at the load, and may trip before the fuse has a chance to blow. This could cause considerable and unnecessary disruption to rest of the system. To prevent this from occurring the operating time of the current differential element can be time delayed to grade with the fuse.

# Block diagram

**Figure 309 - Line differential protection function structure overview**

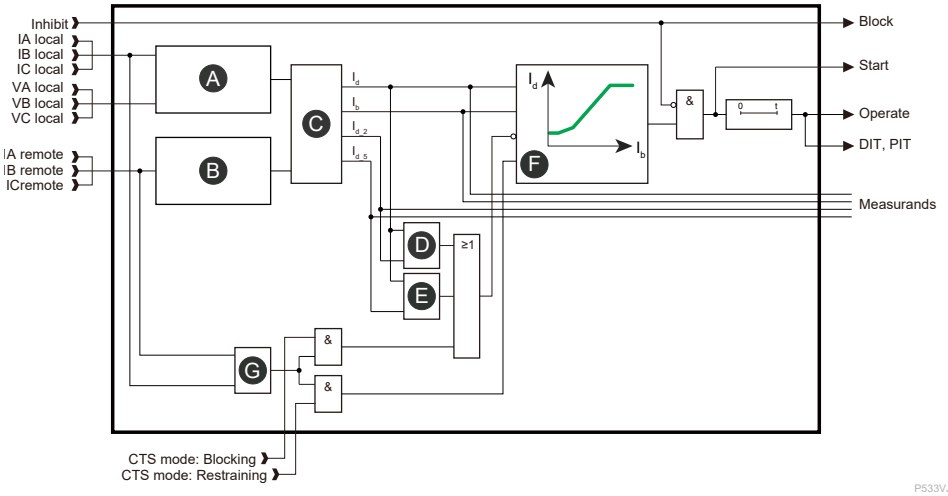

| | | | |
|---|---|---|---|
| A | Local end current and voltage:<br>• Polarity alignment<br>• Time alignment<br>• Magnitude alignment<br>• Optional: Phase sequence alignment<br>• Optional: Vector group correction<br>• Optional: Zero-sequence current filtering<br>• Optional: Captive charging current compensation | B | Remote end current<br>(aligned vector data through communication link) |
| C | DIFF calculation | D | Inrush detection |
| E | Overfluxing detection | F | Biased characteristic |
| G | Differential CTS | | |

# Characteristics

**Table 108 - Settings and characteristics of line differential protection function (ANSI 87L)**

| Settings/characteristics (description/label) | Values |
|---|---|
| **Enable line differential protection** | |
| Enable for L-Diff | Off/On |
| **Low set $I_d$** | |
| Setting range | 0.10 ... 3.00 pu |
| Resolution | 0.01 pu |
| **Slope 1** | |
| Setting range | 10% ... 150% |
| Resolution | 1% |
| **$I_b$ for start of slope 2** | |
| Setting range | 1.00 ... 30.00 pu |
| Resolution | 0.01 pu |
| **Slope 2** | |
| Setting range | 30% ... 150% |
| Resolution | 1% |
| **High set mode** | |
| Enable High set mode | Off/On |
| **High set $I_d$** | |
| Setting range | 1.00 ... 30.00 pu |
| Resolution | 0.01 pu |
| **Restraint mode** | |
| Setting range | Phase selective/Higher stability |
| **Operate delay** | |
| Setting range | 0.00...100.00 s |
| Resolution | 0.01 s |
| Accuracy | 1% or ±10 ms |
| **Current release status** | |

**Table 108 - Settings and characteristics of line differential protection function (ANSI 87L) (Continued)**

| Settings/characteristics (description/label) | Values |
|---|---|
| Enable of current release | Disabled/Enabled |
| **I> release** | |
| Setting range | 0.02 ... 1.00 pu |
| Accuracy | ±2% or ±0.005 pu |
| **Angle supervision** | |
| Angle supervision slope | 1% ... 30% |
| Angle supervision time | 0.10 ... 30.00 s |
| **CTS operating mode** | |
| Setting range | Indication/Blocking/Restraining |
| **CTS low set Id** | |
| Setting range | 0.10 ... 30.00 pu |
| Resolution | 0.01 pu |
| **PIT time** | |
| Setting range | 0.000 ... 2.000 s |
| Resolution | 0.001 s |
| **PIT current selection** | |
| Setting range | Disabled/Remote/Local |
| **PIT current** | |
| Setting range | 0.10 ... 20.00 pu |
| Resolution | 0.01 pu |
| **Compensation mode** | |
| Setting range | None/Cap. charging/Transformer |
| **Capacitive charging current** | |
| Setting range | 0 ... 1000 A |
| Resolution | 1 A |
| **Vector group** | |
| Setting range | 1 ... 11 |
| **Zero-sequence current filtering** | |
| Options | Disabled/Enabled |
| **Inrush restraint mode** | |
| Options | Disabled/Restraining/Blocking |
| **2nd harmonic multiplier** | |
| Setting range | 0.1 ... 20.0 |
| Resolution | 0.1 |
| **Inrush blocking ratio** | |
| Setting range | 5% ... 50% |
| Resolution | 1% |
| Accuracy | 2% |
| **Inrush cross block** | |
| Enable Inrush cross block | Disabled/Enabled |
| **Max inrush** | |

**Table 108 - Settings and characteristics of line differential protection function (ANSI 87L) (Continued)**

| Settings/characteristics (description/label) | Values |
|---|---|
| Setting range | 1.00 ... 30.00 pu |
| Resolution | 0.01 pu |
| **Overflux blocking** | |
| Enable Overflux blocking | Disabled/Enabled |
| **Overflux blocking ratio** | |
| Setting range | 5% ... 100% |
| Resolution | 1% |
| Accuracy | 2% |
| **Overflux cross block** | |
| Enable Overflux cross block | Disabled/Enabled |
| **Scaling** | |
| Reference current (Iref) | 10...10000 A |
| CT correction factor | 0.1 ... 2.00 x CT prim |
| Linear range | 40 x Iref |
| **References** | |
| Communication | Refer to Protection communication, page 454. |
| **Characteristics**[127] | |
| Basic characteristic accuracy | ±5% or ±0.01 pu |
| Reset ratio | 95% ± 2% |
| Disengaging time | < 60 ms (65 ms with high speed) |
| **Setting group/SetGrp** | |
| Number | 4 |

127. Claimed values are valid for power system frequencies within nominal frequency +/- 2 Hz.

# Transformer differential protection (ANSI 87T)

## Description

### General

The PowerLogic P5T30 transformer differential protection is a high-speed, two-ended, phase segregated, transformer differential protection for distribution applications in the industry and utility segments, with absolute selectivity for power transformers, motors, generators, shunt reactors and similar equipment. For full application flexibility of this protection function, CT arrangement uses generic naming "CT-1" and "CT-2". In a standard transformer differential application CT-1 end is the high voltage (HV) end, and CT-2 end is the low voltage (LV) end.

Based on the primary current comparison principle, the current values from both ends are continuously compared. In normal operation conditions or during external faults without CT saturation, the primary currents at both ends are practically the same, so the comparison result is practically zero (actually, the magnetizing current and thermal copper losses take less than 1% of transformer nominal current). For faults inside the protected transformer (inside the protected object) the comparison will result in values higher than the operation value, so the protection will trip. The zone of protection is precisely defined by the location of current transformers in the substations.

As the differential protection function measures the currents through the CTs, errors introduced from the CTs (namely transformation error and transient saturation) are considered. Same with uncertainties regarding the transformation ratio of the primary transformer.

This is basically done by calculating differential and restraining current and comparing these values against a triple-slope tripping characteristic.

The trip is usually instantaneous, or with a time delay for more complex protection schemes where other protection functions are embedded in the differential protection zone.

**Figure 310 - Protected zone of current differential protection**

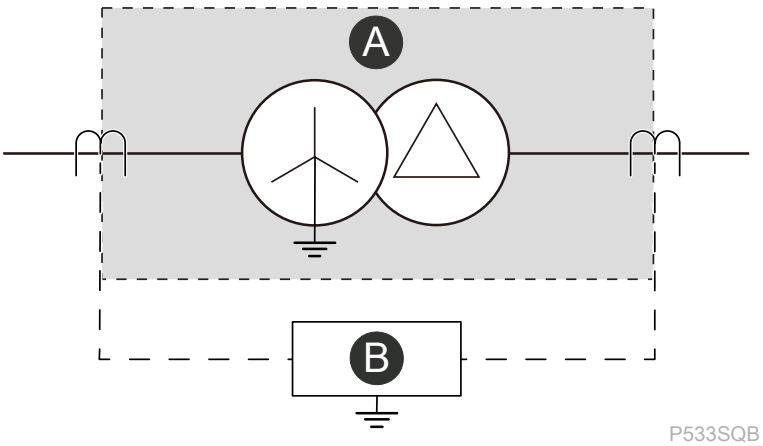


| | | | |
|---|---|---|---|
| A | Protected zone | B | Differential relay |

The 16 disturbance recording channels are added by default when enabling this protection. If you want to edit the channels or add new channel, refer to Disturbance recording parameters (measurements and monitored values), page 563.

# Current measurement and preprocessing

## CT polarity

Differential protection function measures phase currents through different sets of CTs, which could be connected in standard way (common point toward protected object side) or in opposite way. This affects the sign of the measured current. Accordingly, settings are provided to adjust actual wiring to the function needs. For the CT orientation and polarity, please refer to CT and LPCT typical application, page 71 and Scaling settings, page 490.

## Phase swapping

Hydro pump storage applications use motor/generators, where reversing the operating mode is done by swapping 2 phases either on HV or LV side. If such a reversing switch is inside the protected zone, the protection scheme is able to get aligned. Accordingly, settings are provided for this phase swapping feature. Please refer to Scaling settings, page 490.

Activation of phase swapping is controlled through a dedicated digital input signal (Phase swap activation input = DI1 – DIx, Fx, VI1 – VIx).

## Amplitude matching

Protection is based on comparison of the primary phase currents. In a transformer protection application, these will be naturally different with a ratio inverse to the nominal voltages of the windings.

These currents are measured through CTs with a different transformation ratio, more or less according to the nominal currents of the power transformer.

For example, a 110kV/22kV power transformer with 60 MVA rated power has a nominal current on HV side of 315 A and on LV side of 1575 A. Accordingly CTs on HV side could be 400:1 A and on LV side 2000:1 A.
PowerLogic P5 takes into account such different nominal currents and ratios in the data processing and provides amplitude matching settings to adjust the function accordingly: all currents are scaled to reference currents, calculated based on a common reference power $S_{ref}$ and the nominal voltages of each end. For protection of transformers, motors, shunt reactors etc., this reference power is usually the rated or nominal power of the protected object.

The reference currents are calculated from the set reference power $S_{ref}$,

- End-1 (HV) reference current: $I_{ref\text{-}1} = S_{ref} / \sqrt{3} \cdot V_{rated,end\text{-}1}$
- End-2 (LV) reference current: $I_{ref\text{-}2} = S_{ref} / \sqrt{3} \cdot V_{rated,end\text{-}2}$

With these reference currents and the primary nominal currents of the CTs the amplitude matching factors are calculated:

- CT-1 amplitude matching factor: $k_{amp,1} = I_{CT\text{-}1,primary} / I_{ref\text{-}1}$
- CT-2 amplitude matching factor: $k_{amp,2} = I_{CT\text{-}2,primary} / I_{ref\text{-}2}$

These matching factors are displayed at the P5.

If the value of a factor is outside the range from 0.1 to 32.0, the differential protection function is blocked.

The measured phase currents from each end are scaled with these factors per following equations:

- HV end phase currents: $\underline{I}_{amp,p,2} = k_{amp,1} \cdot I_{p,CT\text{-}1}$
- LV end phase currents: $\underline{I}_{amp,p,2} = k_{amp,2} \cdot I_{p,CT\text{-}2}$

where:

- amp = amplitude-matched
- p = phase A, B or C

## Vector group correction

The transformer HV windings are indicated by capital letters and the LV windings by lower case letters. The numbers refer to positions on a clock face and indicate the phase displacement of balanced 3-phase LV line currents with respect to balanced 3-phase HV line currents. The HV side is taken as reference and it is the 12 o'clock position.

Therefore, each hour represents a 30° shift; for example, 1 represents a 30° lag and 11 represents a 30° lead (LV with respect to HV). An additional N, YNd1 (lower case for LV, d) indicates a neutral to earth connection on the high voltage winding of the power transformer.

By studying the relative phase shifts that can be obtained, it can be seen that star-star windings allow even vector group configurations and star-delta/delta-star windings allow odd group configurations.

According to the set vector group the LV side currents for differential comparison are calculated from different phases to align with the primary connection, as sketched in the following figure.

**Figure 311 - Example of phase shift for a YNd5 transformer**

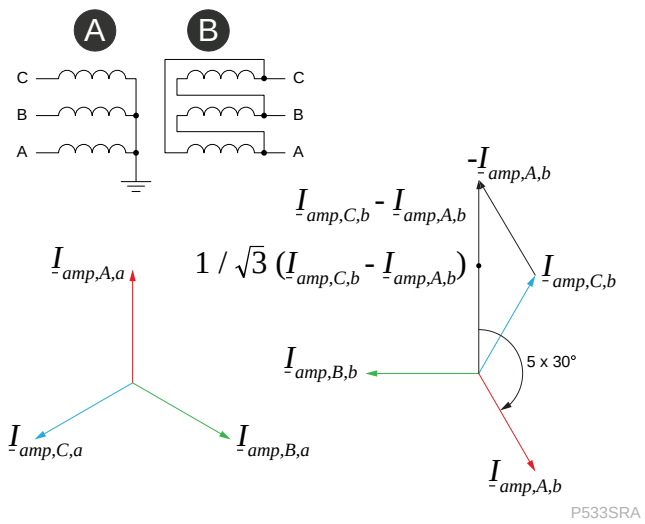


A Winding a B Winding b

## Zero-sequence current filtering

The figure below shows the need for zero-sequence current filtering for differential protection across a transformer. It mimics the distribution of primary zero-sequence current in the protection scheme. The power transformer delta winding acts as a "trap" to zero-sequence current. This current is therefore only seen on the star connection side of the power transformer and hence as differential current by the protection scheme.

If the zero-sequence current filtering is enabled, one third of measured zero-sequence current is subtracted from each phase current. Otherwise, if disabled, one third of measured zero-sequence current is added to each phase current to increase the differential protection sensitivity for internal earth/ground faults on non-earthed/grounded ends.

Accordingly, the following calculations are executed per end:

1. Determination of zero-sequence current:
   - $\underline{I}_{zero,x} = ( \underline{I}_{A,x} + \underline{I}_{B,x} + \underline{I}_{C,x} ) / 3$
2. Determination of filtered phase currents:
   - If zero-sequence current filtering is enabled:
     - $\underline{I}_{p,zero.x} = \underline{I}_{p,x} - \underline{I}_{zero,x}$
   - Otherwise:
     - $\underline{I}_{p,zero.x} = \underline{I}_{p,x} + \underline{I}_{zero,x}$

where x = end 1 (HV) or 2 (LV), p = A, B, C

**Figure 312 - Need for zero-sequence current filtering**

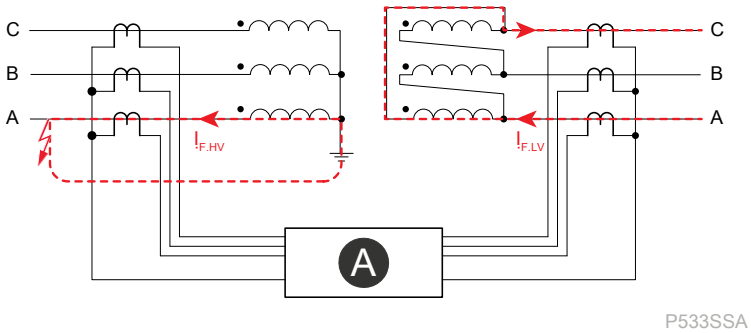


A DIFF

| | HV end (CT-1) | LV end (CT-2) |
|---|---|---|
| Setting | Zero-sequence current filtering CT-1 = Yes | Zero-sequence current filtering CT-2 = No |
| Calculated currents per end and measuring system: | | |
| | $\underline{I}_{zero,HV} = (\underline{I}_{A,HV} + \underline{I}_{B,HV} + \underline{I}_{C,HV}) / 3 = \underline{I}_{F,HV} / 3$ | $\underline{I}_{zero,LV} = (\underline{I}_{A,LV} + \underline{I}_{B,LV} + \underline{I}_{C,LV}) / 3 = 0$ |
| ms1 (A) | $\underline{I}_{ms1,zero,HV} = \underline{I}_{A,HV} - \underline{I}_{zero,HV} = 2/3 \cdot \underline{I}_{F,HV}$ | $\underline{I}_{ms1,zero,LV} = \underline{I}_{C,LV} - \underline{I}_{A,LV} + \underline{I}_{zero,LV} = 2 \cdot \underline{I}_{F,LV}$ |
| ms2 (B) | $\underline{I}_{ms2,zero,HV} = \underline{I}_{B,HV} - \underline{I}_{zero,HV} = - 1/3 \cdot \underline{I}_{F,HV}$ | $\underline{I}_{ms2,zero,LV} = \underline{I}_{B,LV} - \underline{I}_{C,LV} + \underline{I}_{zero,LV} = - 1 \cdot \underline{I}_{F,LV}$ |
| ms3 (C) | $\underline{I}_{ms3,zero,HV} = \underline{I}_{C,HV} - \underline{I}_{zero,HV} = - 1/3 \cdot \underline{I}_{F,HV}$ | $\underline{I}_{ms3,zero,LV} = \underline{I}_{A,LV} - \underline{I}_{B,LV} + \underline{I}_{zero,LV} = - 1 \cdot \underline{I}_{F,LV}$ |

The following table lists all the mathematical phasor operations. It shows that for all odd-numbered vector group characteristics the zero-sequence current on the low-voltage side is basically always filtered out, whereas for even-numbered vector group characteristics the zero-sequence current on the low-voltage side is basically never filtered out automatically. The latter is also true for the high-voltage side since in that case no mathematical phasor operations are performed. Vector group matching and zero-sequence current filtering must therefore always be viewed in combination.

**Table 109 - Numerical processing depending on vector group and zero-sequence current filtering**

| Vector group | With zero-sequence current filtering | Without zero-sequence current filtering |
|---|---|---|
| Mathematical operations on the HV side | | |
| | $\underline{I}_{vec,ms,z} = \underline{I}_{amp,p,z} - \underline{I}_{amp,zero.z}$ | $\underline{I}_{vec,ms,z} = \underline{I}_{amp,p,z}$ |
| Mathematical operations on the LV side for even-numbered vector group characteristics | | |
| 0 | $\underline{I}_{vec,ms,z} = \underline{I}_{amp,p,z} - \underline{I}_{amp,zero.z}$ | $\underline{I}_{vec,ms,z} = \underline{I}_{amp,p,z}$ |
| 2 | $\underline{I}_{vec,ms,z} = - ( \underline{I}_{amp,p+1,z} - \underline{I}_{amp,zero.z} )$ | $\underline{I}_{vec,ms,z} = - \underline{I}_{amp,p+1,z}$ |
| 4 | $\underline{I}_{vec,ms,z} = \underline{I}_{amp,p-1,z} - \underline{I}_{amp,zero.z}$ | $\underline{I}_{vec,ms,z} = \underline{I}_{amp,p-1,z}$ |
| 6 | $\underline{I}_{vec,ms,z} = - ( \underline{I}_{amp,p,z} - \underline{I}_{amp,zero.z} )$ | $\underline{I}_{vec,ms,z} = - \underline{I}_{amp,p,z}$ |
| 8 | $\underline{I}_{vec,ms,z} = \underline{I}_{amp,p+1,z} - \underline{I}_{amp,zero.z}$ | $\underline{I}_{vec,ms,z} = \underline{I}_{amp,p+1,z}$ |
| 10 | $\underline{I}_{vec,ms,z} = - ( \underline{I}_{amp,p-1,z} - \underline{I}_{amp,zero.z} )$ | $\underline{I}_{vec,ms,z} = - \underline{I}_{amp,p-1,z}$ |
| Mathematical operations on the LV side for odd-numbered vector group characteristics | | |
| 1 | $\underline{I}_{vec,ms,z} = ( \underline{I}_{amp,p,z} - \underline{I}_{amp,p+1,z} ) / \sqrt{3}$ | $\underline{I}_{vec,ms,z} = [ ( \underline{I}_{amp,p,z} - \underline{I}_{amp,p+1,z} ) / \sqrt{3} ] + \underline{I}_{amp,zero.z}$ |
| 3 | $\underline{I}_{vec,ms,z} = ( \underline{I}_{amp,p-1,z} - \underline{I}_{amp,p+1,z} ) / \sqrt{3}$ | $\underline{I}_{vec,ms,z} = [ ( \underline{I}_{amp,p-1,z} - \underline{I}_{amp,p+1,z} ) / \sqrt{3} ] + \underline{I}_{amp,zero.z}$ |
| 5 | $\underline{I}_{vec,ms,z} = ( \underline{I}_{amp,p-1,z} - \underline{I}_{amp,p,z} ) / \sqrt{3}$ | $\underline{I}_{vec,ms,z} = [ ( \underline{I}_{amp,p-1,z} - \underline{I}_{amp,p,z} ) / \sqrt{3} ] + \underline{I}_{amp,zero.z}$ |
| 7 | $\underline{I}_{vec,ms,z} = ( \underline{I}_{amp,p+1,z} - \underline{I}_{amp,x,z} ) / \sqrt{3}$ | $\underline{I}_{vec,ms,z} = [ ( \underline{I}_{amp,p+1,z} - \underline{I}_{amp,p,z} ) / \sqrt{3} ] + \underline{I}_{amp,zero.z}$ |
| 9 | $\underline{I}_{vec,ms,z} = ( \underline{I}_{amp,p+1,z} - \underline{I}_{amp,p-1,z} ) / \sqrt{3}$ | $\underline{I}_{vec,ms,z} = [ ( \underline{I}_{amp,p+1,z} - \underline{I}_{amp,p-1,z} ) / \sqrt{3} ] + \underline{I}_{amp,zero.z}$ |
| 11 | $\underline{I}_{vec,ms,z} = ( \underline{I}_{amp,p,z} - \underline{I}_{amp,p-1,z} ) / \sqrt{3}$ | $\underline{I}_{vec,ms,z} = [ ( \underline{I}_{amp,p,z} - \underline{I}_{amp,p-1,z} ) / \sqrt{3} ] + \underline{I}_{amp,zero.z}$ |

Where the indices in the equations have the following meanings:

- amp: amplitude-matched
- vec: amplitude- and vector group-matched
- p: phase A, B or C
- p+1: cyclically trailing phase
- p-1: cyclically leading phase
- ms: measuring system 1, 2 or 3
- z: end 1(HV) or 2(LV)

A reverse phase rotation (A-C-B) setting and phase swapping condition are taken automatically into account in the calculation of these amplitude- and vector group-matched phase currents from both ends.

# Differential protection

## Differential protection calculations

The differential protection is based on calculation of differential and restraint (or bias) current, both calculated from amplitude matched, vector group compensated and zero-sequence current filtered currents as detailed in Numerical processing depending on vector group and zero-sequence current filtering, page 480.

The differential current is sum of HV and LV side current values (per phase), it is calculated with:

$$I_d = | \underline{I}_{vec,end1} + \underline{I}_{vec,end2} |$$

The bias current is the difference of HV and LV side current values (per phase), scaled to be comparable with the load current in normal operation.

It is calculated in one of the following ways according to the selected method:

- Sum of absolute values divided by 2:

  $I_R = ( | \underline{I}_{vec,end1} | + | \underline{I}_{vec,end2} | ) / 2$
- Absolute value of phasor difference divided by 2:

  $I_R = | \underline{I}_{vec,end1} - \underline{I}_{vec,end2} | / 2$

## Differential characteristic

With high current flowing through the protected object, for example during external fault conditions, a differential current might be apparent. The reason can be due to different ratio errors and/or magnetizing/saturation characteristics of the CTs. Therefore, the current differential protection gets provided with a biased tripping characteristic, as shown in following figure:

**Figure 313 - Biased tripping characteristic**

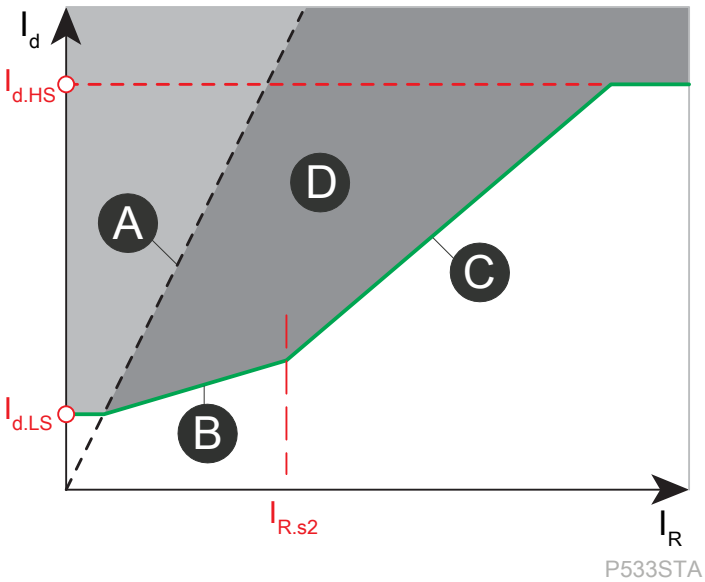


| | | | |
|---|---|---|---|
| A | Characteristic for single side fed fault = 200% slope | B | Slope 1 |
| C | Slope 2 | D | Trip area |

Whatever method is used, the calculated value pair of differential and restraining current ($I_d$ and $I_R$) is compared against this characteristic with three sections (green characteristic in above figure). The first section is a horizontal line at set pick-up threshold $I_{d.LS}$ up to the intersection with the line for single side infeed, with value considering basic inaccuracies (transformer magnetizing current, …). The first slope (slope 1) ensures sensitivity to internal faults, while providing increasing restraint to for example compensate effect of false amplitude matching due to non-compensated tap changer. The second slope provides stability against measuring errors like CT saturation.

The high set unrestrained differential current level $I_{d.HS}$ defines the characteristic boundary. Differential currents which are higher than this value indicate internal faults (external faults are limited for example by transformer reactance) and require the fastest fault clearance. Therefore, differential protection will operate without consideration of the restraint current.

The differential operating current is calculated using the following characteristic equations:

| | |
|---|---|
| For $I_R < I_{d.LS} / 2$ | $I_d > I_{d.LS}$ |
| For $I_{d.LS} / 2 \leq I_R \leq I_{R.S2}$ | $I_d >$ Slope 1 x ( $I_R - I_{d.LS} / 2$ ) + $I_{d.LS}$ |
| For $I_R > I_{R.S2}$ | $I_d >$ Slope 2 x ( $I_R - I_{R.S2}$ ) + Slope 1 x ( $I_{R.S2} - I_{d.LS} / 2$ ) + $I_{d.Ls}$ |

### High-set differential operation

The transformer differential function provides a setting “EnableHS” for unrestrained operation.

When the setting “EnableHS” is set to *On*, the start and trip decision is made regardless of the amount of measured restraining current if the measured differential current exceeds the high-set threshold $I_{d.HS}$.

When the setting “EnableHS” is set to *Off*, the high-set (unrestrained) differential operation is disabled.

### Operate time delay

The transformer differential function provides a setting for time delayed trip, to allow time grading of overlapping differential protection zones. The default setting is instantaneous, meaning with no intentional time delay. In that case, start and trip signals are issued at the same time.

## Supplementary features

### Inrush detection

Any sudden change of magnetizing voltage will cause a magnetizing inrush. This most commonly occurs when energising a transformer (initial inrush), but it occurs also upon voltage recovery after primary system failure (recovery inrush) or voltage drop when energising a parallel transformer (sympathetic inrush).

This magnetising inrush current usually flows into one transformer winding only and is not represented at the other transformer end, hence is seen as differential current from the protection. Therefore, inrush current detection and prevention from false tripping is an inherent part of the differential protection function.

Inrush condition is determined by evaluating the ratio of the $2^{nd}$ harmonic to fundamental current component, based on the phase segregated differential currents. This signal analysis is executed only if the differential current is within reasonable limits:

- the fundamental of the differential current is higher than a fixed minimum current of 0.1 $I_{ref}$
- the differential current is smaller than a set threshold, set above the expected maximum inrush current

Further complementary conditions are checked prior to accepting an inrush condition:

- the differential current waveform must show gaps (namely, periods of few milliseconds with no current flow, as they are present with real inrush currents)
- the inrush waveform has to be detected in at least 2 phases (there is no three-phase transformer energisation condition, where only one phase shows an inrush waveform).

If inrush detection is enabled and an inrush condition is determined, then differential protection will be blocked.

The differential protection blocking is settable to be either phase-selective or cross-blocking.

**Figure 314 - Inrush detection structure overview**

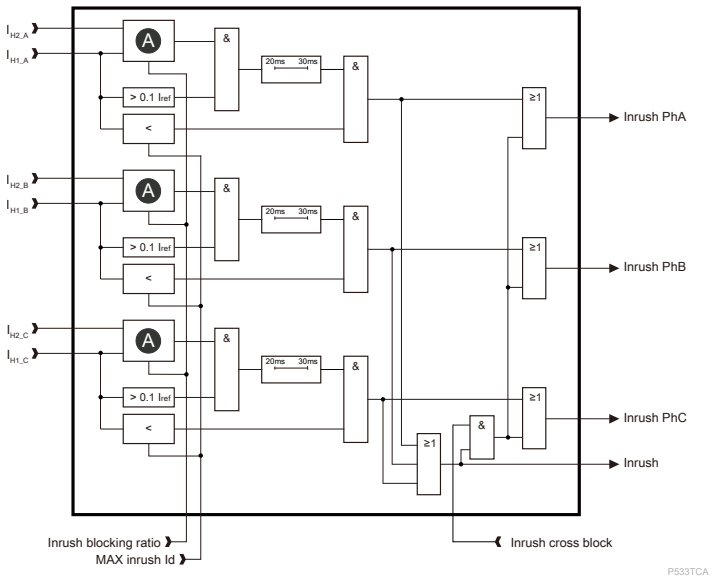


| | |
|---|---|
| A | H2 / H1 > pick-up H2 |

## Transformer overfluxing detection

If the transformer is energised with a voltage in excess of its nominal voltage, saturation effects occur which in turn cause higher magnetising currents. Without stabilisation, these could lead to differential protection tripping. The fact that the current of the protected object under saturation conditions has a high proportion of $5^{th}$ harmonic serves as the basis of stabilisation.

Overfluxing detection is provided as an option, based on the phase segregated differential currents. The ratio of the 5th harmonic to fundamental component of the differential current is evaluated, while the fundamental current is within a range of 0.1…4.0 $I_{ref}$. If this ratio is bigger than the set threshold, overflux blocking gets activated and blocks the differential protection function. As per setting, this is either phase selective or cross-blocking.

The structure overview is much similar to the figure above.

## CT saturation detection

During external faults CTs may saturate, either because of very high fault currents, or because of slowly decaying DC offset of primary current. Appropriate measures are implemented to detect such conditions to prevent false differential tripping. Yet vice versa, a fast reset of this blocking feature is also provided for fast differential protection tripping in case of consecutive faults inside the protection zone.

## CT supervision (differential CTS)

Generally, current transformer supervision is used to detect failure of the phase current inputs to protection relay of one or more phases. Failure of a phase CT or an open circuit of the interconnecting wiring can result in incorrect operation of any current operated element. Additionally, interruption in the AC current circuits risks dangerous CT secondary voltages being generated.

Differential CTS will operate if the following 3 conditions are simultaneously present:

- the ratio of negative to positive sequence current $I_2/I_1$ on one end exceeds a high set threshold ($I_2/I_1$ high)
- the ratio $I_2/I_1$ on the other end remains below a low set threshold ($I_2/I_1$ low)
- the positive sequence currents $I_1$ on both ends exceed a set threshold $I_1$>

When CTS operates, it will raise its fast CTS alarm output instantaneously, while a latched CTS alarm output is issued after a set delay has expired.

As a mutual constraint, differential CTS gets blocked and its output reset if (and as long as) any inrush or overflux blocking signal is present.

Differential CTS is provided with three modes of interaction with differential protection function:

- **Indication only:** no impact of CTS alarm on differential protection operation.
- **Restraining:** the minimum differential protection pick-up value is “shifted” vertically to a set $I_{d.CTS}$ while CTS alarm is present, as shown below.
- **Blocking:** differential protection is blocked while CTS alarm is present.

**Figure 315 - Biased tripping characteristic with CTS restraint**

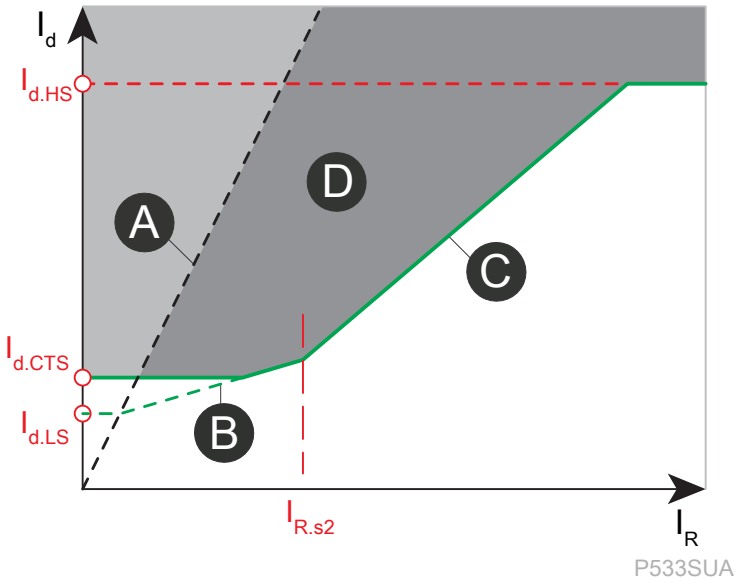


| | | | |
|---|---|---|---|
| A | Characteristic for single side fed fault = 200% slope | B | Slope 1 |
| C | Slope 2 | D | Trip area |

**Figure 316 - CTS operate logic**

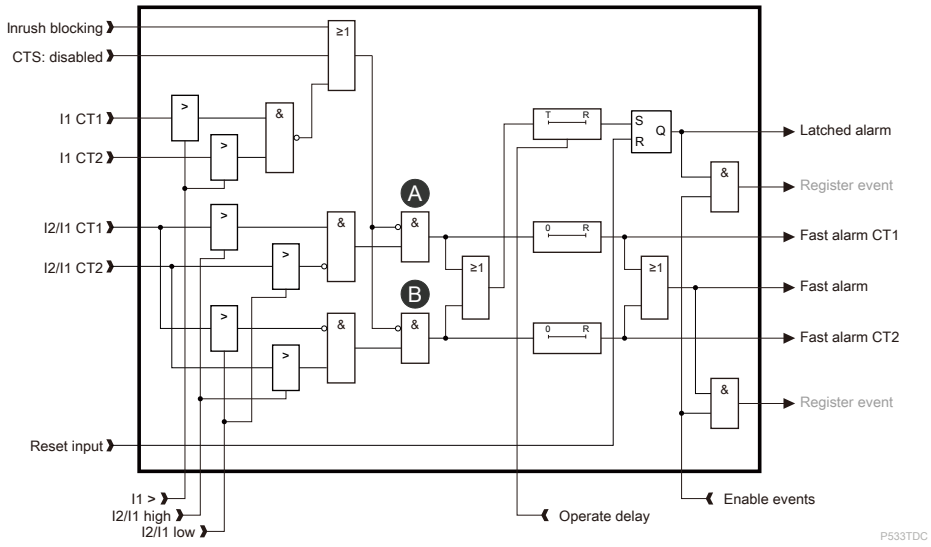


| | | | |
|---|---|---|---|
| A | CT1 failure | B | CT2 failure |

# Block diagram

**Figure 317 - Transformer differential protection function structure overview**

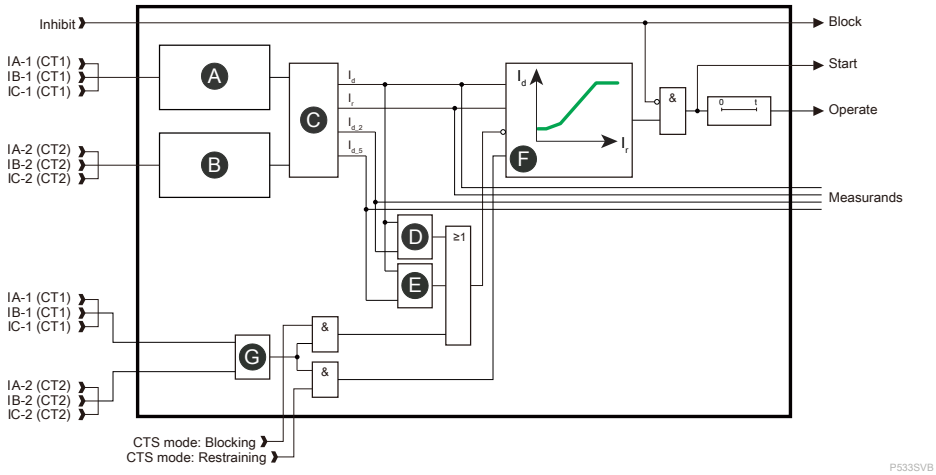


| | | | |
|---|---|---|---|
| A | End 1 (CT-1) current:<br>• Polarity adjustment<br>• Phase swapping<br>• Ratio correction<br>• Zero-sequence current filtering | B | End 2 (CT-2) current:<br>• Polarity adjustment<br>• Phase swapping<br>• Ratio correction<br>• Vector group correction<br>• Zero-sequence current filtering |
| C | DIFF calculation | D | Inrush detection |
| E | Overfluxing detection | F | Biased characteristic |
| G | Differential CTS | | |

# Characteristics

**Table 110 - Settings and characteristics of transformer differential protection function (ANSI 87T)**

| Settings/characteristics (description/label) | Values |
|---|---|
| **Reference power** | |
| Setting range | 0.1...1000.0 MVA |
| **CT-1 end rated voltage** | |
| Setting range | 0.1...500.0 kV |
| **CT-2 end rated voltage** | |
| Setting range | 0.1...500.0 kV |
| **Phase CT-1 polarity** | |
| Setting range | Standard/Opposite |
| **Phase CT-2 polarity** | |
| Setting range | Standard/Opposite |
| **CT-1 Phase swap** | |
| Setting range | No swap; A-B; B-C; C-A |
| **CT-2 Phase swap** | |
| Setting range | No swap; A-B; B-C; C-A |
| **Enable for T-Diff** | |

**Table 110 - Settings and characteristics of transformer differential protection function (ANSI 87T) (Continued)**

| Settings/characteristics (description/label) | Values |
|---|---|
| Enable T-Diff | On/Off |
| **Vector group** | |
| Setting range | 0…11 |
| **Zero-seq. current filtering CT-1, Zero-seq. current filtering CT-2** | |
| Enable Zero-seq. current filtering CT-1<br>Enable Zero-seq. current filtering CT-2 | On/Off |
| **Low set $I_d$** | |
| Setting range | 0.10… 3.00 $I_{ref}$ |
| Resolution | 0.01 $I_{ref}$ |
| Accuracy | ±3% or ± 0.005 $I_{ref}$ |
| Reset ratio | 95% ± 2% |
| **Slope 1** | |
| Setting range | 10%…150% |
| Resolution | 1% |
| **$I_b$ for start of slope 2** | |
| Setting range | 1.00…30.00 $I_{ref}$ |
| Resolution | 0.01 $I_{ref}$ |
| **Slope 2** | |
| Setting range | 30%…150% |
| Resolution | 1% |
| **High set mode** | |
| Enable High set mode | On/Off |
| **High set $I_d$** | |
| Setting range | 1.00…30.00 $I_{ref}$ |
| Resolution | 0.01 $I_{ref}$ |
| Accuracy | ±3% or ± 0.005 $I_{ref}$ |
| Reset ratio | 95% ± 2% |
| **Bias calculation mode** | |
| Setting range | Diff. of phasors; Sum of abs. val. |
| **Operate delay** | |
| Setting range | 0.00…100.00 s |
| Resolution | 0.01 s |
| Accuracy | ±1% or ± 20 ms |
| **Inrush blocking** | |
| Enable Inrush blocking | On/Off |
| **Inrush blocking ratio** | |
| Setting range | 5%…50% |
| Resolution | 1% |
| **Inrush cross block** | |
| Enable Inrush cross block | On/Off |
| **Max inrush current** | |

**Table 110 - Settings and characteristics of transformer differential protection function (ANSI 87T) (Continued)**

| Settings/characteristics (description/label) | Values |
|---|---|
| Setting range | 2.50…30.00 $I_{ref}$ |
| Resolution | 0.01 $I_{ref}$ |
| **Overflux blocking** | |
| Enable Overflux blocking | On/Off |
| **Overflux blocking ratio** | |
| Setting range | 5%…100% |
| Resolution | 1% |
| **Overflux cross block** | |
| Enable Overflux cross block | On/Off |
| **CTS operating mode** | |
| Setting range | Indication; Blocking; Restraining |
| **CTS low set $I_d$** | |
| Setting range | 0.10…3.00 $I_{ref}$ |
| Resolution | 0.01 $I_{ref}$ |
| Accuracy | ±3% or ± 0.005 $I_{ref}$ |
| Reset ratio | 95% ± 2% |
| **Characteristics** | |
| Start time | < 50 ms/40 ms (with high speed) for differential currents at 2 x Low set $I_d$<br>< 35 ms/30 ms (with high speed) for differential currents at 4 x Low set $I_d$ |
| Disengaging time | < 50 ms |
| **Setting group/SetGrp** | |
| Number | 4 |

# Programmable stages (ANSI 99)

## Description

For special applications dedicated protection and monitoring stages can be set up by selecting the signal to be supervised and the comparison mode. This is not to be confused with programmable IDMT curves. Programmable stages trigger an event from a selection of signals and select the type, level and timing to suit the application.

The following parameters are available:

**Priority:**

If operate times less than 80 ms are needed, select 10 ms. For operate times shorter than 1 s, 20 ms is recommended. For longer operation times and THD signals, 100 ms is recommended.

**Input value A:**

The selected supervised signal in compare conditions ">" and "<". The available signals are shown in Available signals to be supervised by the programmable stages, page 489

**Input value B:**

The selected supervised signal in "Diff" and "AbsDiff" mode. This selection becomes available once "Diff" or "AbsDiff" is chosen as compare condition. Available signals for selection depends on the selected input value A.

**Timebase for input value A (B):**

The timebase of the selected supervised signal can be set to "Instant", "200 ms", "1 min", or "demand". When the timebase "demand" is selected, the demand time window is set in the **Demand values** view of the **Measurements** menu.

**Compare condition:**

- > ('over...')

  Comparison of input A against exceeding the set pick-up value.
- < ('under...')

  Comparison of input A against dropping below the set pick-up value.
- Diff

  Calculated value of input A minus input B is compared against exceeding the set pick-up value, if the sign of the difference value is positive.
- AbsDiff

  Calculated absolute value of input A minus input B is compared against exceeding the set pick-up value.

**Pick-up value :**

Limit of the stage. The available setting range and the unit depend on the selected signal.

**Operate delay:**

Definite time operate delay.

**Hysteresis:**

Hysteresis (dead band) of the comparator function as percentage of the set threshold.

**No Compare limit for mode < :**

Only used in compare condition under ('<'). This is the minimum limit to start the comparison. Signal values below this limit are disregarded. This feature prevents the programmable stage to operate on small values that could be caused by noise or signal interferences.

**NOTE:** The 'No Compare limit for mode <' value can only be set successfully when it is smaller than the start values in all 4 setting groups. An attempt to set it higher than the start value in any setting group is rejected, even if the setting group is not active.

## Available signals

**Table 111 - Available signals to be supervised by the programmable stages**

| Signals | Description |
|---|---|
| IA, IB, IC | Phase currents |
| IN | Neutral current |
| IN.sens | Sensitive neutral current |
| IN.CSH | Neutral current measured with CSH |
| VAB, VBC, VCA | Phase to phase voltages |
| VA, VB, VC | Phase to neutral voltages |
| VN.meas | Measured neutral voltage |
| VN.calc | Neutral voltage calculated from 3 phase voltages |
| f | Frequency |
| IN.calc | Neutral current calculated from 3 phase currents |
| $I_1$ | Positive sequence current |
| $I_2$ | Negative sequence current |
| $I_2/I_1$ | Ratio of negative to positive sequence current |
| $V_1$ | Positive sequence voltage |
| $V_2$ | Negative sequence voltage |
| $V_2/V_1$ | Ratio of negative to positive sequence voltage |
| VPN average | Average phase to neutral voltage |
| VPP average | Average phase to phase voltage |
| IA THD | Total harmonic distortion of current IA |
| IB THD | Total harmonic distortion of current IB |
| IC THD | Total harmonic distortion of current IC |
| VA THD | Total harmonic distortion of voltage VA |
| VB THD | Total harmonic distortion of voltage VB |
| VC THD | Total harmonic distortion of voltage VC |
| $IA_{RMS}$ | RMS value of current IA |
| $IB_{RMS}$ | RMS value of current IB |
| $IC_{RMS}$ | RMS value of current IC |
| $IN_{rms}$ | RMS value of earth/ground current |
| $IN.sens_{rms}$ | RMS value of sensitive earth/ground current |
| $IN.CSH_{rms}$ | RMS value of CSH earth/ground current |

## Eight independent stages

The PowerLogic P5 protection relay has eight independent programmable stages. Each programmable stage can be enabled or disabled according to the application.

# Measurement functions

## Primary, secondary and per unit scaling

All measurement values are shown as primary values although the PowerLogic P5 protection relay is connected with its analogue voltage and current inputs to secondary signals. Some measurement values are shown as relative values in per unit or percent. Almost all pick-up setting values are using relative scaling.

The scaling is done using the rated values of VTs and CTs, or LPVTs and LPCTs depending on the selected model order option.

## Scaling settings

The scaling settings define the characteristics of measurement transformers connected to the PowerLogic P5 protection relay and determine the correct adaptation and performance of the metering and protection functions.

They are accessed via:

- eSetup Easergy Pro or web HMI **Scaling** view in **General** menu
- on local panel in the **CT- VT** view of the **General** menu

The scaling parameters are listed in List of scaling parameters, page 490.

**Table 112 - List of scaling parameters**

| Scaling parameters | Description | Selection[128] | Value |
|---|---|---|---|
| Iprim.nom | Rated primary phase current of CT | CT | 10 A to 20 kA |
| | Nominal current | LPCT | K x $I_{pr}$ (automatically calculated) |
| Isec.nom | Rated secondary phase current of CT | CT | 1 A or 5 A |
| Ipr | LPCT rated current corresponding to 22.5 mV at the secondary | LPCT | 10 A to 5 kA |
| Phase CT polarity | Orientation of phase CT connection | CT, LPCT | Standard/Opposite |
| IN CT polarity | Orientation of standard neutral CT connection | Standard earth/ground fault CT | Standard/Opposite |
| IN.sens CT polarity | Orientation of sensitive neutral CT connection | Sensitive earth/ground fault CT | Standard/Opposite |
| CSH CT polarity | Orientation of CSH connection | CSH core balance CT | Standard/Opposite |
| K | Current factor | LPCT | 0.25 - 0.50 - 1.00 - 1.25 - 1.33 - 2.00 - 2.50 - 3.20 - 4.00 - 5.00 - 6.30 - 6.66 - 10 - 16 - 20 - 25 - 31.5 |
| Number of connected phase CT | Number of CT | CT | IA/IB/IC, or IA/IC |
| IN.prim.nom | Rated primary neutral current of CT | Calculated | 10 A to 20 kA (see $I_{prim.nom}$) |
| | | CSH core balance CT according to the input selected | 2 A or 20 A |
| | | Standard earth/ground fault CT | 1 A to 20 kA |
| IN.sec.nom | Rated secondary neutral current of CT | Calculated | 1 A or 5 A (see $I_{sec.nom}$) |
| | | CSH core balance CT | - |

128. Depending on the model number option.

### Table 112 - List of scaling parameters (Continued)

| Scaling parameters | Description | Selection[129] | Value |
|---|---|---|---|
| | | Standard earth/ground fault CT | 1 A, 2 A, 5A |
| IN.sens.prim.nom | Rated primary neutral current of CT | Sensitive earth/ground CT primary | 1 A to 20 kA |
| IN.sens.sec.nom | Rated secondary neutral current of CT | Sensitive earth/ground CT secondary | 1 A fixed |
| VT type[129] | VT type | | LPVT (fixed) |
| Vprim.nom | Rated primary voltage of transformer | VT | 100 V to 500 kV |
| | Nominal voltage | LPVT | 75 V to 500 kV |
| Vsec.nom | Rated secondary voltage of transformer | VT | 25 V to 250 V |
| Vpr | LPVT rated voltage corresponding to 3,25/√3 mV at the secondary | LPVT | 50 to 500,000 V |
| K | Voltage factor | LPVT | 0.25 to 1.5 |
| VAMagCor[130] | VA magnitude correction | LPVT | 0.9000 to 1.1000 |
| VAAngCor[130] | VA Angle correction | LPVT | -5.0000 to 5.0000 |
| VBMagCor[130] | VB magnitude correction | LPVT | 0.9000 to 1.1000 |
| VBAngCor[130] | VB Angle correction | LPVT | -5.0000 to 5.0000 |
| VCMagCor[130] | VC magnitude correction | LPVT | 0.9000 to 1.1000 |
| VCAngCor[130] | VC Angle correction | LPVT | -5.0000 to 5.0000 |
| VAyMagCor[130] | VAy magnitude correction | LPVT | 0.9000 to 1.1000 |
| VAyAngCor[130] | VAy Angle correction | LPVT | -5.0000 to 5.0000 |
| VByMagCor[130] | VBy magnitude correction | LPVT | 0.9000 to 1.1000 |
| VByAngCor[130] | VBy Angle correction | LPVT | -5.0000 to 5.0000 |
| VN.prim.nom | Rated primary neutral voltage of transformer | VT | Same setting as the rated primary voltage of transformer |
| | | LPVT | Same setting as the rated primary voltage of transformer |
| VN.sec.nom | Rated secondary neutral voltage of transformer | VT | 25 V to 240 V |
| Phase rotation | Phase sequence selection | | A - B - C or A - C - B |
| Voltage measurement mode | Usage of voltage inputs for phase voltage, neutral voltage or other additional voltage | VT | 3VP, 3VP+VN, 3VP/VPy, 3VP/VPPy, 2VPP +VN+VPPy, 2VPP + VN, VPP/VPPy |
| | | LPVT | 3VP, 3VP+VN, 3VP/VPy, 3VP/VPPy |
| fn | Nominal frequency of power system | | 50 Hz or 60 Hz |
| Power direction | Direction of the power flow | | Outgoing or Incoming |

129. Depending on the model number option.
129. Only available for LPVT board
130. When LPVT is installed in the system, a magnitude correction factor and an angle correction factor will be used to compensate the accuracy. If the LPVT is a resistor divided type, it is recommended to set magnitude to 1 and angle correction factors to 0, but if it is a capacitor divided type, then these correction factor settings should be configured according to the nameplate of the LPVT sensor.

# Current values

## Primary and secondary values

**Table 113 - Primary and secondary scaling**

| | Current (CT) Neutral current calculated | Neutral current (CT) | Current (LPCT) Neutral current calculated (LPCT) |
|---|---|---|---|
| Secondary -> Primary | $I_{prim} = I_{sec} \cdot \frac{I_{prim.nom}}{I_{sec.nom}}$ | $IN_{.prim} = IN_{.sec} \cdot \frac{IN_{.prim.nom}}{IN_{.sec.nom}}$ | $I_{prim} = \frac{V_{sec}}{k \cdot 22.5\ mV} \cdot I_{pr}$ |
| Primary -> Secondary | $I_{sec} = I_{prim} \cdot \frac{I_{sec.nom}}{I_{prim.nom}}$ | $IN_{.sec} = IN_{.prim} \cdot \frac{IN_{.sec.nom}}{IN_{.prim.nom}}$ | $V_{sec} = \frac{I_{prim}}{I_{pr}} \cdot k \cdot 22.5\ mV$ |

For neutral current measured by CSH core balance CTs, only primary values are considered. CTprim is equal at 2A or 20A according to the connection on the protection relay.

**Examples**

1. **Secondary to primary (CT)**

   CT = 500 A / 5 A

   If the current on PowerLogic P5 input is 4 A, then the corresponding primary current is Iprim = 4 x 500 / 5 = 400 A.

2. **Secondary to primary (LPCT)**

   LPCT = 100 A / 22.5 mV

   If the voltage on the LPCT input is 30 mV, then the corresponding primary current is Iprim = 30 / 22.5 x 100 = 136 A, whatever is K.

   With K = 0.25, $V_{sec}$ corresponds to 136 / (100 x 0.25) = 5.44 $I_n$.

3. **Primary to secondary (CT)**

   CT = 500 A / 5 A

   If PowerLogic P5 displays Iprim = 100 A, then the injected current is

   $I_{sec}$ = 100 x 5 / 500 = 1 A.

4. **Primary to secondary (LPCT)**

   LPCT = 100 A / 22.5 mV

   If PowerLogic P5 displays Iprim = 640 A, then the injected current is

   $V_{sec}$ = 640 / 100 x 22.5 = 144 mV, whatever is K.

   With K = 3.2, $V_{sec}$ corresponds to 640 / (100 x 3.2) = 2 $I_n$.

# Per unit [pu] values

**Table 114 - Per unit [pu] scaling**

| | Phase current (CT) scaling | Phase current (LPCT) scaling | Neutral current scaling | Neutral current (CSH) scaling |
|---|---|---|---|---|
| Physical -> Per unit | $I_{pu} = \frac{I_{sec}}{I_{sec.nom}}$ | $I_{pu} = V_{sec} / (k \cdot 22.5)$ | $I_{pu} = \frac{I_{sec}}{I_{sec.nom}}$ | - |
| | $I_{pu} = \frac{I_{prim}}{I_{prim.nom}}$ | $I_{pu} = \frac{I_{prim}}{I_{pr} \cdot k}$ | $I_{pu} = \frac{I_{prim}}{I_{prim.nom}}$ | $I_{pu} = \frac{I_{prim}}{I_{prim.nom}}$ |
| Per unit -> physical | $I_{sec} = I_{pu} \cdot I_{sec.nom}$ | $I_{sec} = I_{pu} \cdot k \cdot 22.5$ | $I_{sec} = I_{pu} \cdot I_{sec.nom}$ | - |
| | $I_{prim} = I_{pu} \cdot I_{prim.nom}$ | $I_{prim} = I_{pu} \cdot k \cdot I_{pr}$ | $I_{prim} = I_{pu} \cdot I_{prim.nom}$ | $I_{prim} = I_{pu} \cdot I_{prim.nom}$ |

**Examples**

1. **Secondary to per unit for phase current (CT)**

   CT = 750 A / 5 A

   If the current injected is 7 A, then the per unit current is

   $I_{pu}$ = 7 / 5 = 1.4 pu

2. **Per unit to secondary for phase current (CT)**

   CT = 750 A / 5 A

   If the protection setting is 2.0 pu, then the corresponding secondary current is $I_{sec}$ = 2 x 5 = 10 A.

3. **Secondary to per unit for phase current (LPCT)**

   LPCT = 100 A / 22.5 mV with K = 3.2

   If the PowerLogic P5 protection relay displays Iprim = 640 A, then the injected voltage is

   $V_{sec}$ corresponds to 640 / (100 x 3.2) = 2 $I_n$.

4. **Primary to per unit for phase current (LPCT)**

   LPCT rated current = 100 A with LPCT Current factor k = 2 (45 mV at the secondary)

   If the primary current is 150 A (33.75 mV at the secondary), then the per unit current (voltage) is $I_{pu}$ = 150/200 = 33.75/45 = 0.75 $I_n$.

5. **Per unit to primary and secondary value (LPCT)**

   LPCT rated current = 100 A with LPCT Current factor = 10

   If protection setting is 1.5 $I_n$, the corresponding secondary voltage is

   $V_{sec}$ = 1.5 x 10 x 22.5 = 337.5 mV,

   and the corresponding primary current is

   Iprim = 1.5 x 100 x 10 = 1.5 kA.

6. **Secondary to per unit for earth/ground fault current (CT)**

   EF CT = 750 A / 1 A

   If for standard and sensitive earth/ground fault inputs the current is 30 mA, then the per unit current is

   $I_{pu}$ = 0.03 / 1 = 0.03.

7. **Per unit to secondary for earth/ground fault current (CT)**

   EF CT = 50 A / 1 A

   If for standard and sensitive earth/ground fault inputs the protection setting is 0.1 pu, then the corresponding $I_{sec}$ = 0.1 x 1 = 100 mA.

## Calculation scenarios for CSH30

Scenario 1: The second value of standard EF CT is 1 A and fixed to 2 A CSH channel and 2 turns in CSH CT primary.

Parameters: IN.prim = 1000 A, IN.sec = 1 A, Turns = 2, IN.CSH.nom = 2 A, standard CT is connected to 2 A CSH channel

**Table 115 - Calculation scenario 1**

| Earth fault current in primary (A) | Standard EF CT second value (A) | Standard EF CT second value (pu) | CSH CT primary value (A) | CSH CT primary value (pu) |
|---|---|---|---|---|
| 500 | 0.5 | 0.5 | 0.5 | 0.25 |
| 1000 | 1.0 | 1.0 | 1.0 | 0.5 |
| 2000 | 2.0 | 2.0 | 2.0 | 1.0 |

Scenario 2: The second value of standard EF CT is 5 A and fixed to 20 A CSH channel and 4 turns in CSH CT primary.

Parameters: IN.prim = 1000 A, IN.sec = 5 A, Turns = 4, IN.CSH.nom = 20 A, standard CT is connected to 20 A CSH channel

**Table 116 - Calculation scenario 2**

| Earth fault current in primary (A) | Standard EF CT second value (A) | Standard EF CT second value (pu) | CSH CT primary value (A) | CSH CT primary value (pu) |
|---|---|---|---|---|
| 500 | 2.5 | 0.5 | 2.5 | 0.125 |
| 1000 | 5.0 | 1.0 | 5.0 | 0.25 |
| 2000 | 10.0 | 2.0 | 10.0 | 0.5 |

# Voltage values

## Rated phase and neutral voltage inputs

Voltage transformer scaling is always based on the phase to phase voltages in all voltage measurements modes.

The rated phase and neutral voltage inputs are defined as below:

**Table 117 - Voltage rating (VT)**

| VT connection | VT ratio | | Value for 1 pu or 100% | | | | |
|---|---|---|---|---|---|---|---|
| | primary | secondary | PP | PN | V1 | V2 | VN |
| 3VP | Vprim. nom/√3 | Vsec.nom/ √3 | Vpri-m. nom | Vprim. nom/√3 | Vprim. nom/√3 | Vprim. nom/√3 | √3 x Vprim. nom |
| 1VPP | Vprim. nom | Vsec.nom | Vpri-m. nom | - | - | - | - |
| 2VPP | Vprim. nom | Vsec.nom | Vpri-m. nom | Vprim. nom/√3 | Vprim. nom/√3 | Vprim. nom/√3 | - |

**Table 117 - Voltage rating (VT) (Continued)**

| VT connection | VT ratio | | Value for 1 pu or 100% | | | | |
|---|---|---|---|---|---|---|---|
| Broken delta | VN.prim. nom/√3 | VN.sec. nom/√3 | - | - | - | - | √3 x Vprim. nom |
| VPy | Vprim. nom/√3 | Vprim.nom/ √3 | - | Vprim. nom/√3 | - | - | - |
| VPPy | Vprim. nom | Vprim.nom | Vpri-m. nom | - | - | - | - |

**NOTE:** V1 and V2 are respectively the positive and the negative sequence voltages. VN is the neutral voltage (zero-sequence voltage x3).

**Table 118 - Voltage rating (LPVT)**

| Connection | LPVT primary | LPVT secon-dary | LPVT nomi-nal volt-age | Value for 1 pu or 100% | | | | |
|---|---|---|---|---|---|---|---|---|
| | | | | PP | PN | V1 | V2 | VN |
| 3VP | Vprim. nom/√3 | 3.25V/ √3 | Vprim. nom/ √3 | Vprim. nom | Vprim. nom/√3 | Vprim. nom/ √3 | Vprim. nom/√3 | Vprim. nom/√3 |
| Broken delta[131] | VN.prim. nom/√3 | VN.sec. nom/√3 | - | - | - | - | - | √3 x Vprim. nom |
| VPPy | Vprim. nom.y | 3.25V/ √3 | Vprim. nom.y/ √3 | Vprim. nom.y | - | - | - | - |

131. possible only with VT + LPVT adapter

# Primary and secondary scaling of phase to phase voltages

**Table 119 - Primary and secondary scaling of phase to phase voltages**

| | Phase to phase voltage measurement (PP) with VT | Phase to neutral measurement (PN) with VT | Phase to neutral voltage measurement with LPVT |
|---|---|---|---|
| Secondary –> Primary | $V_{prim} = V_{sec} \cdot \frac{V_{prim.nom}}{V_{sec.nom}}$ | $V_{prim} = \sqrt{3} \cdot V_{sec} \cdot \frac{V_{prim.nom}}{V_{sec.nom}}$ | $V_{prim} = 3.25 \frac{V_{prim.nom}}{V_{sec.nom}}$ |
| Primary –> Secondary | $V_{sec} = V_{prim} \cdot \frac{V_{sec.nom}}{V_{prim.nom}}$ | $V_{sec} = \frac{V_{prim}}{\sqrt{3}} \cdot \frac{V_{sec.nom}}{V_{prim.nom}}$ | $V_{sec} = \frac{V_{prim}}{V_{prim.nom}} \cdot \frac{3.25}{\sqrt{3}}$ |

**Examples**

1. **Secondary to primary**

   **Phase to phase voltage measurement mode (VT)**

   VT = 12000 V / 110 V

   If voltage connected to the PowerLogic P5 input $V_A$, $V_B$ or $V_C$ = 100 V, then primary voltage is Vprim = 100 x 12000 / 110 = 10909 V.

   **Phase to neutral voltage measurement mode (VT)**

   VT = 12000 V / 110 V

   If the three phase symmetric voltage magnitude is 60 V, then the primary voltage is Vprim = √3 x 60 x 12000 / 110 = 11336 V.

2. **Primary to secondary**

   **Phase to phase voltage measurement mode (VT)**

   VT = 12000 V / 110 V

   If the PowerLogic P5 protection relay displays Vprim = 10910 V, then the secondary voltage is Vsec = 10910 x 110 / 12000 = 100 V.

   **Phase to neutral voltage measurement mode (VT)**

   VT = 12000 V / 110 V

   If the PowerLogic P5 protection relay displays
   VAB = VBC = VCA = 10910 V for a symmetric voltage system, then the secondary voltages at $V_A$, $V_B$ and $V_C$ are

   Vsec = 10910 / √3 x 110 / 12000 = 57.7 V.

3. **Phase to neutral voltage measurement mode (LPVT)**

   LPVT = 20 kV / 3.25 V with k = 0.5

   If the PowerLogic P5 protection relay displays
   VAB = VBC = VCA = 11 kV for a symmetric voltage system, then the secondary voltages $V_A$, $V_B$, and $V_C$ are

   Vsec = 11000 / 20000 x 3.25 / √3 = 1.032 V.

# Per unit [pu] scaling of phase to phase voltages

One per unit = 1 pu = 1 x Vnom = 100%, where Vnom = rated voltage of the VT.

**Table 120 - Per unit [pu] scaling of phase to phase voltages**

| | Phase to phase voltage measurement (PP) with VT | Phase to neutral voltage measurement (PN) with VT | Phase to neutral voltage measurement with LPVT |
|---|---|---|---|
| Physical –> per unit | $V_{pu} = \frac{V_{sec}}{V_{sec.nom}} = \frac{V_{prim}}{V_{prim.nom}}$ | $V_{pu} = \sqrt{3} \cdot \frac{V_{sec}}{V_{sec.nom}} = \sqrt{3} \cdot \frac{V_{prim}}{V_{prim.nom}}$ | $V_{pu} = \frac{V_{prim}}{k \cdot V_{pr}}$ <br> $V_{pu} = \frac{V_{sec}}{k \cdot 3.25} \cdot \sqrt{3}$ |
| Per unit –> physical | $V_{sec} = V_{pu} \cdot V_{sec.nom}$ | $V_{sec} = V_{pu} \cdot \frac{V_{sec.nom}}{\sqrt{3}}$ | $V_{sec} = \frac{V_{pu} \cdot k \cdot 3.25}{\sqrt{3}}$ |
| | $V_{prim} = V_{pu} \cdot V_{prim.nom}$ | $V_{prim} = V_{pu} \cdot \frac{V_{prim.nom}}{\sqrt{3}}$ | $V_{prim} = V_{pu} \cdot k \cdot V_{pr}$ |

**Examples**

1. **Secondary to per unit**

   **Phase to phase voltage measurement mode**

   VT = 12000 V / 110 V

   If the voltage input of $V_A$ or $V_B$ is 100 V, then the per unit voltage is

   Vpu = 100 / 110 = 0.91 pu.

   **Phase to neutral voltage measurement mode**

   VT = 12000 V / 110 V

   If the three symmetric phase to neutral injected to the voltage inputs are 63.5 V, then the per unit voltage is pu = √3 x 63.5 / 110 = 1.00 pu.

2. **Per unit to secondary**

   **Phase to phase voltage measurement mode**

   VT = 12000 V /110 V

   If the PowerLogic P5 protection relay displays 1.00 pu, then the secondary voltage is Vsec = 1.00 x 110 = 110 V.

   **Phase to neutral voltage measurement mode**

   VT = 12000 V / 110 V

   If the PowerLogic P5 protection relay displays 0.8 pu, then the three symmetric phase to neutral voltages injected to the inputs are

   Vsec = 0.8 x 110 / √3 = 50.8 V.

3. **Per unit to secondary for voltage measurement with LPVT**

   LPVT = 20 kV / 3.25 V with k = 0.8

   If the phase to neutral voltage displayed is 0.5 x Vnom, the secondary value injected to the PowerLogic P5 protection relay is 0.5 x 0.8 x 3.25 / √3 = 0.75 V.

# Per unit [pu] scaling of neutral voltage

**Table 121 - Per unit [pu] scaling of neutral voltage**

| | Neutral voltage measured | Neutral voltage calculated with VT | Neutral voltage calculated with LPVT |
|---|---|---|---|
| Physical -> per unit | $VN_{pu} = \frac{VN_{sec} \cdot VN_{prim.nom}}{\sqrt{3} \cdot VN_{sec.nom} \cdot V_{prim.nom}}$ | $VN_{pu} = \frac{\lvert \bar{V}_A + \bar{V}_B + \bar{V}_C \rvert_{sec}}{\sqrt{3} \cdot V_{sec.nom}}$ | $VN_{pu} = \frac{\lvert \bar{V}_A + \bar{V}_B + \bar{V}_C \rvert_{sec}}{k \cdot 3.25}$ |
| | $VN_{pu} = \frac{VN_{prim}}{\sqrt{3} \cdot V_{prim.nom}}$ | $VN_{pu} = \frac{\lvert \bar{V}_A + \bar{V}_B + \bar{V}_C \rvert_{prim}}{\sqrt{3} \cdot V_{prim.nom}}$ | $VN_{pu} = \frac{\lvert V_A + V_B + V_C \rvert_{prim}}{k \cdot V_{prim}}$ |
| Per unit -> physical | $VN_{sec} = \frac{VN_{pu} \cdot VN_{sec.nom}}{\sqrt{3} \cdot VN_{prim.nom} \cdot V_{prim.nom}}$ | $\lvert \bar{V}_A + \bar{V}_B + \bar{V}_C \rvert_{sec} = VN_{pu} \cdot \sqrt{3} \cdot V_{sec.nom}$ | $\lvert \bar{V}_A + \bar{V}_B + \bar{V}_C \rvert_{sec} = VN_{pu} \cdot \sqrt{3} \cdot k \cdot 3.25\,V$ |
| | $VN_{prim} = \sqrt{3} \cdot VN_{pu} \cdot V_{prim.nom}$ | $\lvert \bar{V}_A + \bar{V}_B + \bar{V}_C \rvert_{prim} = VN_{pu} \cdot \sqrt{3} \cdot V_{prim.nom}$ | $\lvert V_A + V_B + V_C \rvert_{prim} = VN_{pu} \cdot \sqrt{3} \cdot V_{prim.nom}$ |

**Examples**

1. **Secondary to per unit**

   **Neutral voltage measured (VT)**

   VN.sec.nom = 110 V (configuration value corresponding to VN measured when starpoint fully displaced); VN.prim.nom = Vnom / √3 = 20 kV / √3.

   If the voltage fed into the relay's voltage input V4 is 44 V, then the per unit neutral voltage value is Vpu = (44 / 110) x (20 kV / √3) = 0.40 / 3 = 0.13 pu = 13.3%.

   **Neutral voltage calculated (VT)**

   VT ratio = 20 kV / 110 V

   If the voltage fed into the relay's voltage input V1 is 38.1 V, while V2 = V3 = 0, then the per unit neutral voltage value is

   Vpu = (38.1 + 0 + 0) / ( √3 x 110) = 0.20 pu = 20%.

   **Neutral voltage calculated (LPVT)**

   LPVT ratio = 20 kV / (k x 3.25 V) with k = 1.5

   If the voltage fed into the relay's voltage LPVT input V1 is 2 V, while V2 = V3 = 0, then the per unit neutral voltage value is Vpu = (2 + 0 + 0) / (k x 3.25 x √3) = 0.24 pu = 24%.

2. **Per unit to secondary**

   **Neutral voltage measured (VT)**

   VN.sec.nom = Vsec.nom = 110 V (configuration value corresponding to VN measured when starpoint fully displaced); VN.prim.nom = Vnom / √3 = 20 kV / √3.

   If the relay measures VN.pu = 0.20 pu, then the secondary voltage at voltage input V4 is VN.sec = 0.20 x (110 V / (20 kV / √3)) x (√3 x 20 kV) = 22 x 3 = 66 V.

   **Neutral voltage calculated (VT)**

   VT ratio = 20 kV /110 V

   If the relay measures VN.pu = 0.20 pu and if voltage at inputs V2 = V3 = 0, then the secondary voltage at V1 is Vsec = 0.2 x √3 x 110 V = 38.1 V.

   **Neutral voltage calculated (LPVT)**

   LPVT ratio = 20 kV / (k x 3.25 V) with k = 1.5

   If the relay measures VN.pu = 0.30 pu and if voltage at LPVTs V1 = V3 = 0, then the secondary voltage at V2 is Vsec = 0.3 x 1.5 x 3.25 / √3 = 0.84 V.

# Reading of measurements

All measurement values can be read out via:

- Local panel: Measurements menu ( ) and on the Mimic screen if they were configured with eSetup Easergy Pro
- eSetup Easergy Pro: **Measurements** menu
- Communication interface (if the used protocol provide this)
- EcoStruxure Power Device application

The refresh interval, on automatic cyclic updates, is less than 1 second typically.

# Phase currents

PowerLogic P5 measures the fundamental and RMS values of phase current inputs using 1A CTs, 5A CTs, or LPCTs:

**Table 122 - Measurements of fundamental and RMS values of phase current**

| Value | Description |
|---|---|
| **Fundamental value** | |
| IA | Fundamental value of phase 1 current IA |
| IB | Fundamental value of phase 2 current IB |
| IC | Fundamental value of phase 3 current IC |
| **RMS value** | |
| $IA_{rms}$ | RMS value of phase 1 current IA |
| $IB_{rms}$ | RMS value of phase 2 current IB |
| $IC_{rms}$ | RMS value of phase 3 current IC |

The RMS current measurement takes into account harmonics up to the 15th. The calculation is done as follows:

$$I_{RMS} = \sqrt{I_{f1}^2 + I_{f2}^2 + \ldots + I_{f15}^2}$$ P533Z1A

**Table 123 - Characteristics for measuring phase current**

| Signal | Measurement range | Unit | Resolution | Accuracy |
|---|---|---|---|---|
| **Magnitude** | | | | |
| CT | 0.005...60.000 Inom | A | 1 A | ±1% for range 1.2...1.5 Inom<br>±0.5% for range 0.8...1.2 Inom<br>±1% for range 0.3...0.8 Inom<br>±2% for range 0.1...0.3 Inom |
| LPCT | 0.05...45.00 Inom | A | 1 A | ±1% for range 1.2...1.5 Inom<br>±0.5% for range 0.8...1.2 Inom<br>±1% for range 0.3...0.8 Inom<br>±2% for range 0.1...0.3 Inom |
| **Phase angle**[132] | | | | |
| | -180°...+180° | | 0.1° | 0.5° with I > 0.1Inom[133] |

132. Phase angle can only be detected when current is over 100 mA.
133. Nominal CT Rating

# Neutral current

The neutral current is calculated by the vector sum of the 3 phase currents or directly measured with a conventional CT or CSH core balance CT. Where the neutral current is directly measured, the PowerLogic P5 protection relay uses either the connected standard earth/ground fault input (IN) or alternatively the sensitive earth/ground fault input (IN.sens).

**Table 124 - Characteristics for measuring neutral current**

| Signal | Measurement range | Unit | Resolution | Accuracy |
|---|---|---|---|---|
| IN.calc<br>(IN calculated from 3 phase currents) | 0.005...60.000 Inom | A | 0.01 A | ±3% for range 1.2...1.5 Inom<br>±1.5% for range 0.8...1.2 Inom<br>±3% for range 0.3...0.8 Inom<br>±6% for range 0.1...0.3 Inom |
| IN.meas<br>(IN measured with standard 1 A/5 A CT) | 0.005...30.000 IN.nom | A | 0.01 A | ±0.5% for IN > 0.05 IN.nom<br>±1% for range 0.02...0.05 IN.nom<br>±2% for IN < 0.02 IN.nom |
| IN.meas (CSH30)<br>(IN measured with standard 1 A/5 A CT and CSH30 interposing ring CT) | 0.010...30.000 IN.nom | A | 0.01 A | ±2% or 0.001 IN.nom |
| IN.sens<br>(IN measured with sensitive 1 A CT) | 0.002...4.000 IN.sens.nom | A | 0.001 A | ±2% for IN < 0.002 IN.sens.nom<br>±1% for IN > 0.002 IN.sens.nom |
| IN.CSH<br>(IN measured with CSH core-balance CT) | 0.005...42.000 IN.CSH.nom | A | 0.01 A | ±2% or 0.001 IN.nom |

# Positive and negative sequence currents

The positive and negative sequence currents are calculated as the vector sum of the 3 phase currents, subject to phase rotating constant.

For standard phase rotation (A – B – C) they are:

$$\vec{I_1} = \frac{1}{3}(\vec{I_A} + a\vec{I_B} + a^2\vec{I_C})$$

P533BGB

$$\vec{I_2} = \frac{1}{3}(\vec{I_A} + a^2\vec{I_B} + a\vec{I_C})$$

P533BHB

with phasor rotating constant:

$$a = e^{j\frac{2\pi}{3}}$$

P533BEB

**Table 125 - Characteristics for measuring positive and negative sequence currents**

| Signal | Measurement range | Unit | Resolution | Accuracy |
|---|---|---|---|---|
| I1 | 0.01...60.00 Inom | A | 1 A | ±3% for range 1.2...1.5 Inom<br>±1.5% for range 0.8...1.2 Inom<br>±3% for range 0.3...0.8 Inom<br>±6% for range 0.1...0.3 Inom |
| I2 | 0.01...60.00 Inom | A | 1 A | ±3% for range 1.2...1.5 Inom<br>±1.5% for range 0.8...1.2 Inom<br>±3% for range 0.3...0.8 Inom<br>±6% for range 0.1...0.3 Inom |