Cadillac CTS/CTS-V Owner Manual (GMNA-Localizing-U.S./Canada-2ndPrint-11254870) - 2017 - Final Review - 6/14/16

Contents

Introduction 2
In Brief 5
Keys, Doors, and Windows 31
Seats and Restraints 57
Storage 107
Instruments and Controls 111
Lighting 169
Infotainment System 178
Climate Controls 190
Driving and Operating 199
Vehicle Care 277
Service and Maintenance 362
Technical Data 378
Customer Information 383
Reporting Safety Defects 398
OnStar 401
Index 421

Cadillac CTS/CTS-V Owner Manual (GMNA-Localizing-U.S./Canada-2ndPrint-11254870) - 2017 - Final Review - 6/14/16

Introduction

Object-ID=4368704 Owner=Smith, James
LMD=09-Jun-2016 LMB=Clark, Lorien

4379273

The names, logos, emblems, slogans, vehicle model names, and vehicle body designs appearing in this manual including, but not limited to, GM, the GM logo, CADILLAC, the CADILLAC Emblem, CTS and CTS-V are trademarks and/or service marks of General Motors LLC, its subsidiaries, affiliates, or licensors.

For vehicles first sold in Canada, substitute the name “General Motors of Canada Company” for Cadillac Motor Car Division wherever it appears in this manual.

This manual describes features that may or may not be on the vehicle because of optional equipment that was not purchased on the vehicle, model variants, country specifications, features/applications that may not be available in your region, or changes subsequent to the printing of this owner manual.

Refer to the purchase documentation relating to your specific vehicle to confirm the features.

Keep this manual in the vehicle for quick reference.

Canadian Vehicle Owners (US/CAN)

Object-ID=2170296 Owner=Smith, James
LMD=09-Jun-2016 LMB=Clark, Lorien

A French language manual can be obtained from your dealer, at www.helminc.com, or from:

Propriétaires Canadiens

On peut obtenir un exemplaire de ce guide en français auprès du concessionnaire ou à l'adresse suivante:

Helm, Incorporated
Attention: Customer Service
47911 Halyard Drive
Plymouth, MI 48170
USA

Using this Manual

Object-ID=2170298 Owner=Smith, James
LMD=09-Jun-2016 LMB=Clark, Lorien

To quickly locate information about the vehicle, use the Index in the back of the manual. It is an alphabetical list of what is in the manual and the page number where it can be found.

Danger, Warning, and Caution

Object-ID=2809732 Owner=Smith, James
LMD=09-Jun-2016 LMB=Clark, Lorien

Warning messages found on vehicle labels and in this manual describe hazards and what to do to avoid or reduce them.

Cadillac CTS/CTS-V Owner Manual (GMNA-Localizing-U.S./Canada-2ndPrint-11254870) - 2017 - Final Review - 6/14/16

⚠ Danger

Object-ID=2809727 LMD=19-Feb-2014

Danger indicates a hazard with a high level of risk which will result in serious injury or death.

⚠ Warning

Object-ID=2809715 LMD=19-Feb-2014

Warning indicates a hazard that could result in injury or death.

Caution

Object-ID=2809729 LMD=10-Feb-2014

Caution indicates a hazard that could result in property or vehicle damage.

1954876

A circle with a slash through it is a safety symbol which means "Do Not," "Do not do this," or "Do not let this happen."

Symbols

Object-ID=2900789 Owner=Smith, James LMD=09-Jun-2016 LMB=Clark, Lorien

The vehicle has components and labels that use symbols instead of text. Symbols are shown along with the text describing the operation or information relating to a specific component, control, message, gauge, or indicator.

: Shown when the owner manual has additional instructions or information.

: Shown when the service manual has additional instructions or information.

: Shown when there is more information on another page — "see page."

Vehicle Symbol Chart

Here are some additional symbols that may be found on the vehicle and what they mean. For more information on the symbol, refer to the Index.

: Airbag Readiness Light

: Air Conditioning

: Antilock Brake System (ABS)

: Audio Steering Wheel Controls or OnStar® (if equipped)

: Brake System Warning Light

: Charging System

: Cruise Control

: Do Not Puncture

: Do Not Service

: Engine Coolant Temperature

: Exterior Lamps

: Flame/Fire Prohibited

: Fuel Gauge

: Fuses

: Headlamp High/Low-Beam Changer

: Heated Steering Wheel

: LATCH System Child Restraints

: Malfunction Indicator Lamp

: Oil Pressure

: Power

: Remote Vehicle Start

: Safety Belt Reminders

: Tire Pressure Monitor

: Traction Control/StabiliTrak®

: Under Pressure

: Windshield Washer Fluid

Cadillac CTS/CTS-V Owner Manual (GMNA-Localizing-U.S./Canada-2ndPrint-11254870) - 2017 - Final Review - 6/14/16

In Brief

Instrument Panel

Instrument Panel 6

Initial Drive Information

Initial Drive Information 8
Stop/Start System 8
Remote Keyless Entry (RKE) System 8
Remote Vehicle Start 8
Door Locks 9
Trunk 10
Windows 10
Seat Adjustment 10
Memory Features 14
Heated and Ventilated Seats 14
Head Restraint Adjustment 15
Safety Belts 15
Passenger Sensing System 16
Mirror Adjustment 16
Steering Wheel Adjustment 17
Interior Lighting 18
Exterior Lighting 18
Windshield Wiper/Washer 19
Climate Controls 20
Transmission 21
Starting the Engine 21

Vehicle Features

Infotainment System 21
Steering Wheel Controls 21
Cruise Control 22
Driver Information Center (DIC) 22
Forward Collision Alert (FCA) System 23
Forward Automatic Braking (FAB) 23
Lane Keep Assist (LKA) 23
Lane Change Alert (LCA) 23
Surround Vision (CTS Only) 23
Curb View Camera (CTS-V Only) 24
Rear Vision Camera (RVC) 24
Rear Cross Traffic Alert (RCTA) System 24
Parking Assist 24
Automatic Parking Assist (APA) 24
Reverse Automatic Braking (RAB) 25
Vehicle-to-Vehicle 25
Power Outlets 25
Universal Remote System 25
Sunroof 26

Performance and Maintenance

Traction Control/Electronic Stability Control 27
Tire Pressure Monitor 27
Fuel (LGX 3.6L V6 Engine) 28
Fuel (LTG 2.0L L4 Engine) 28
Fuel (LF3 3.6L V6 Twin Turbo and LT4 6.2L V8 Engines) 28
E85 or FlexFuel 29
Engine Oil Life System 29
Car Wash Guidelines 29
Driving for Better Fuel Economy 29
Roadside Service (US/CAN) 30
Roadside Service (MEXICO) 30

Instrument Panel

Object-ID=4035268 Owner=Parker, Cynthia LMD=08-Apr-2016 LMB=Parker, Cynthia

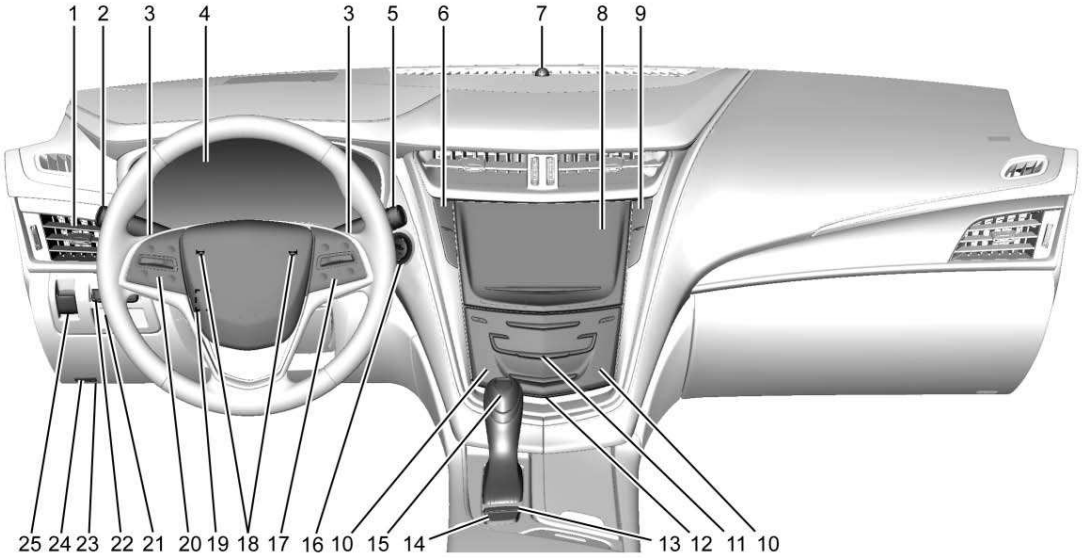

4025569

Cadillac CTS/CTS-V Owner Manual (GMNA-Localizing-U.S./Canada-2ndPrint-11254870) - 2017 - Final Review - 6/14/16

1. *Air Vents* ⇨ *197*.
2. Turn Signal Lever. See *Turn and Lane-Change Signals* ⇨ *173*.
3. *Manual Mode* ⇨ *226* (If Equipped).
4. *Instrument Cluster* ⇨ *120*.
5. *Windshield Wiper/Washer* ⇨ *113*.
6. *Hazard Warning Flashers* ⇨ *173*.

   Lane Keep Assist (LKA) ⇨ *263* (If Equipped).

   Start/Stop Disable Switch (If Equipped). See *Starting the Engine* ⇨ *217*.
7. Light Sensor (If Equipped). See *Automatic Headlamp System* ⇨ *172*.

   Solar Sensor. See *Dual Automatic Climate Control System* ⇨ *190*.
8. *Infotainment* ⇨ *178*.
9. Glove Box Button. See *Glove Box* ⇨ *108*.

   Automatic Parking Assist Button (If Equipped). See *Assistance Systems for Parking or Backing* ⇨ *250*.

   Parking Assist Button. See *Assistance Systems for Parking or Backing* ⇨ *250*.
10. *Heated and Ventilated Front Seats* ⇨ *65* (If Equipped).
11. *Dual Automatic Climate Control System* ⇨ *190*.
12. *Instrument Panel Storage* ⇨ *107*.

    Wireless Charging Pad (If Equipped) (Out of View). See *Wireless Charging* ⇨ *117*.
13. *Traction Control/Electronic Stability Control* ⇨ *230*.
14. MODE Switch. See *Driver Mode Control* ⇨ *231*.
15. Shift Lever. See *Automatic Transmission* ⇨ *224*.

    Manual Mode Button. See *Automatic Transmission* ⇨ *224*.
16. ENGINE START/STOP Button. See *Ignition Positions* ⇨ *216*.
17. *Steering Wheel Controls* ⇨ *113*.

    Driver Information Center (DIC) Controls. See *Driver Information Center (DIC)* ⇨ *140*.
18. *Horn* ⇨ *113*.
19. *Steering Wheel Adjustment* ⇨ *112*.
20. *Cruise Control* ⇨ *238* (If Equipped).

    Adaptive Cruise Control ⇨ *240* (If Equipped).

    Forward Collision Alert (FCA) System ⇨ *257* (If Equipped).

    Heated Steering Wheel ⇨ *113* (If Equipped).
21. *Instrument Panel Illumination Control* ⇨ *174*.
22. *Head-Up Display (HUD)* ⇨ *143* (If Equipped).
23. Data Link Connector (DLC) (Out of View). See *Malfunction Indicator Lamp (Check Engine Light)* ⇨ *131*.
24. Hood Release. See *Hood* ⇨ *280*.
25. Electric Parking Brake (EPB) Switch. See *Electric Parking Brake* ⇨ *228*.

Cadillac CTS/CTS-V Owner Manual (GMNA-Localizing-U.S./Canada-2ndPrint-11254870) - 2017 - Final Review - 6/14/16

Initial Drive Information

Object-ID=2226588 Owner=Szydlowski, Corinna
LMD=08-Oct-2015 LMB=Clark, Lorien

This section provides a brief overview about some of the important features that may or may not be on your specific vehicle.

For more detailed information, refer to each of the features which can be found later in this owner manual.

Stop/Start System

Object-ID=4100173 Owner=Byrne, Matthew
LMD=22-Feb-2016 LMB=Byrne, Matthew

The vehicle is equipped with a fuel saving stop/start system to shut off the engine and help conserve fuel.

When the brakes are applied and the vehicle is at a complete stop, the engine may turn off. When the brake pedal is released or the accelerator pedal is pushed, the engine will restart.

See *Starting the Engine* ⇨ *217*.

Remote Keyless Entry (RKE) System

Object-ID=4490847 Owner=Szydlowski, Corinna
LMD=26-Apr-2016 LMB=Szydlowski, Corinna

The Remote Keyless Entry (RKE) transmitter may work up to 60 m (197 ft) away.

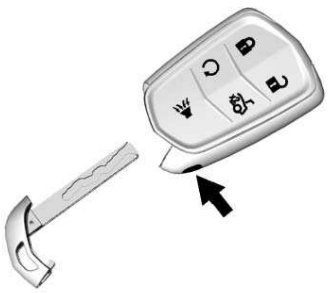

2919924

Press the button to remove the key. The key can be used for the driver door, rear folding seats and the rear seat pass-through door.

Press 🔓 to unlock the driver door or all doors, depending on the vehicle personalization settings.

Press 🔒 to lock all doors, depending on the vehicle personalization settings.

Lock and unlock feedback can be personalized. See *Vehicle Personalization* ⇨ *158*.

Press x2 twice quickly to release the trunk.

Press and release to initiate vehicle locator.

Press and hold for more than three seconds to sound the panic alarm.

Press again to cancel the panic alarm.

See *Keys* ⇨ *31* and *Remote Keyless Entry (RKE) System Operation* ⇨ *32*.

Remote Vehicle Start

Object-ID=3990733 Owner=Szydlowski, Corinna
LMD=16-Dec-2015 LMB=Szydlowski, Corinna

The engine can be started from outside of the vehicle.

Starting the Vehicle

Cadillac CTS/CTS-V Owner Manual (GMNA-Localizing-U.S./Canada-2ndPrint-11254870) - 2017 - Final Review - 6/14/16

1. Press and release on the RKE transmitter.
2. Immediately press and hold for at least four seconds or until the turn signal lamps flash.

Start the vehicle normally after entering.

When the vehicle starts, the parking lamps will turn on.

Remote start can be extended.

Canceling a Remote Start

To cancel a remote start, do one of the following:

- Press and hold until the parking lamps turn off.
- Turn on the hazard warning flashers.
- Turn the vehicle on and then off.

See *Remote Vehicle Start* ⇨ *38*.

Door Locks

Object-ID=3721903 Owner=Szydlowski, Corinna LMD=08-Oct-2015 LMB=Clark, Lorien

Keyless Access

Press the button on the door handle and pull the handle when the Remote Keyless Entry (RKE) transmitter is within range. See *Remote Keyless Entry (RKE) System Operation* ⇨ *32*.

Manual Operation

From outside, use the key in the driver door. The key cylinder is covered by a cap. See *Door Locks* ⇨ *40*.

From the inside rear doors, push down on the door lock knob on top of the door. To unlock a door, pull once on the door handle to unlock it, and again to open it.

Power Door Locks

From outside, press or on the RKE transmitter. See *Remote Keyless Entry (RKE) System Operation* ⇨ *32*.

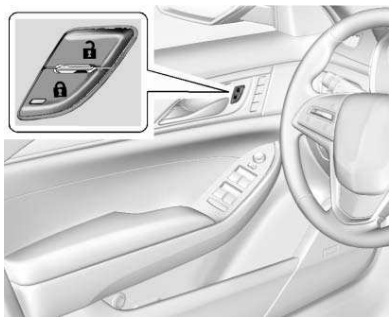

2916811

From inside, press or . The indicator light in the switch will illuminate when locked. See *Power Door Locks* ⇨ *42*.

Trunk

Object-ID=4487966 Owner=Szydlowski, Corinna LMD=06-Apr-2016 LMB=Szydlowski, Corinna

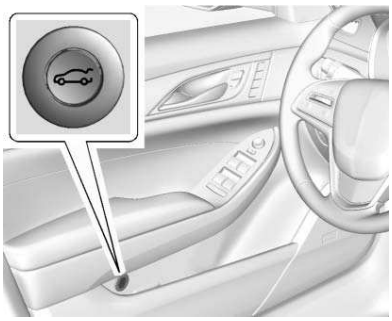

3346209

To open the trunk, press on the driver door, press twice quickly on the Remote Keyless Entry (RKE) transmitter, or press the touch pad on the rear of the vehicle after unlocking all doors.

Press the touch pad on the rear of the trunk above the license plate when the RKE transmitter is in range. See *Remote Keyless Entry (RKE) System Operation* ⇨ *32* and *Trunk* ⇨ *44*.

Windows

Object-ID=2917424 Owner=Szydlowski, Corinna LMD=08-Oct-2015 LMB=Clark, Lorien

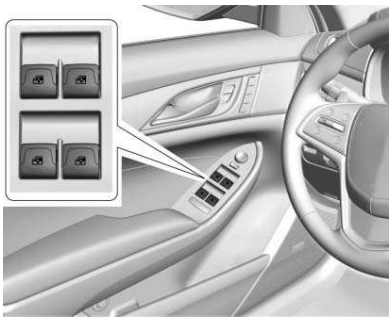

2916813

The driver power window switches control all the windows. The passenger switch only controls that window.

Press the switch down to lower the window. Pull the switch up to raise it. See *Power Windows* ⇨ *52*.

Seat Adjustment

Object-ID=4056591 Owner=Landstrom, Michael LMD=26-Apr-2016 LMB=Landstrom, Michael

Power Seats

High Performance Seat

4056626

To adjust the seat:

- Move the seat forward or rearward by sliding the control forward or rearward.
- Raise or lower the seat by moving the rear of the control up or down.

- If equipped, raise or lower the front part of the seat cushion by moving the front of the control up or down.

High Performance Seat Adjustment

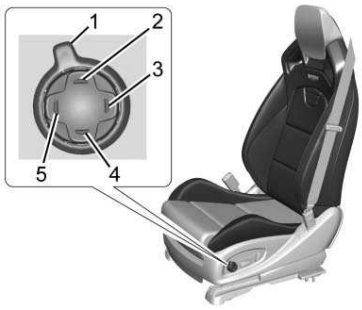

High Performance Seat

4017583

1. Feature Select
2. Up
3. Rearward
4. Down
5. Forward

- Move Feature Select (1) to display seat adjustments on the center stack. Press and release or hold to scroll through features.
- Press Up (2) to make upward adjustments of the selected feature.
- Press Rearward (3) to make rearward adjustments of the selected feature.
- Press Down (4) to make downward adjustments of the selected feature.
- Press Forward (5) to make forward adjustments of the selected feature.

See *Power Seat Adjustment* ⇨ *59*.

Reclining Seatbacks

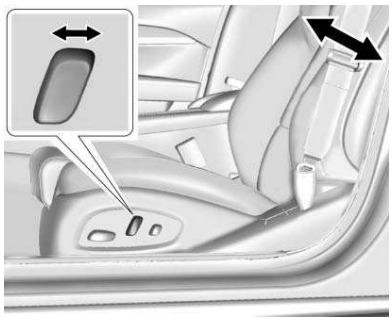

Base Seat

2675340

To adjust the seatback:

- Tilt the top of the control rearward to recline.
- Tilt the top of the control forward to raise.

High Performance Seat

4056523

To adjust the seatback:

- Tilt the top of the control rearward to recline.
- Tilt the top of the control forward to raise.

See *Reclining Seatbacks* ⇨ *62*.

Two-Way Lumbar and Bolster Adjustment

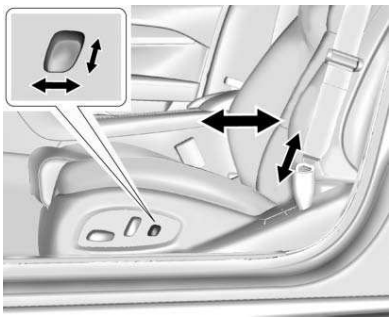

Lumbar Adjustment

2675338

To adjust the two-way lumbar and bolster support, if equipped:

- Press and hold the lumbar adjustment control forward or rearward to adjust lumbar support inward or outward.
- Press and hold the recliner control up or down to increase or decrease seatback bolster support.

Four-Way Lumbar and Bolster Adjustment

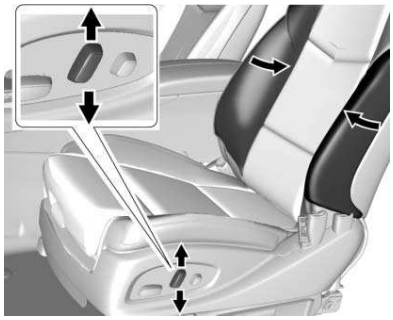

Bolster Adjustment

3319514

To adjust the four-way lumbar and bolster support, if equipped:

- Press and hold the lumbar adjustment control forward or rearward to adjust lumbar support inward or outward and up or down for vertical lumbar adjustment.
- Press and hold the recliner control up or down to increase or decrease seatback bolster support.

See *Lumbar Adjustment* ⇨ *61*.

High Performance Bolster Support

Four-Way Lumbar Support

To adjust lumbar support, if equipped:

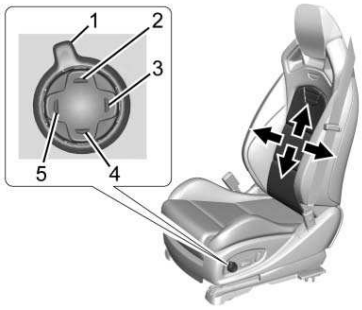

High Performance Seat

4017584

- Press and release or hold Feature Select (1) to scroll to lumbar support on the center stack.
- Press Forward (5) or Rearward (3) to adjust lumbar forward or rearward.
- Press Up (2) or Down (4) to adjust lumbar support up or down.

Cushion Bolster Support

To adjust cushion bolster support, if equipped:

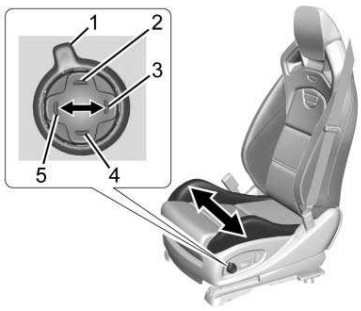

4021145

- Press and release or hold Feature Select (1) to scroll to bolster support on the center stack.
- Press Forward (5) or Rearward (3) to adjust bolster support inward or outward.

Back Bolster Support

To adjust back bolster support, if equipped:

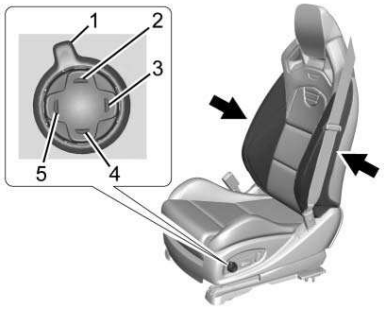

4021147

- Press and release or hold Feature Select (1) to scroll to back bolster support on the center stack.
- Press Forward (5) or Rearward (3) to adjust back bolster support inward or outward.

Memory Features

Object-ID=2900769 Owner=Landstrom, Michael
LMD=08-Oct-2015 LMB=Landstrom, Michael

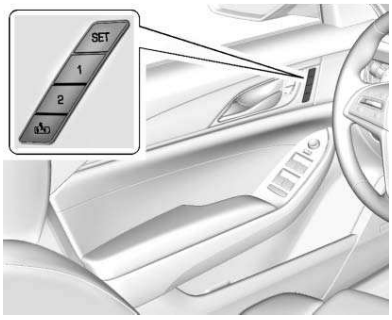

2901329

The SET, 1, 2, and (Exit) buttons on the driver door are used to manually store and recall memory settings for the driver seat, outside mirrors, and power tilt and telescoping steering column (if equipped).

When Auto Memory Recall is enabled in the personalization menu, positions previously stored to memory buttons 1 and 2 are recalled when the ignition is changed from OFF to ON/RUN/START or ACC/ACCESSORY.

When Easy Exit Options is enabled in the personalization menu, the feature will recall the previously stored exit positions when the ignition is changed to OFF and driver door is opened within a short time.

See *Memory Seats* ⇨ *63* and *Vehicle Personalization* ⇨ *158*.

Heated and Ventilated Seats

Object-ID=4326232 Owner=Landstrom, Michael
LMD=02-Dec-2015 LMB=Landstrom, Michael

Uplevel Buttons Shown, Base Buttons Similar

4326236

If equipped, the buttons are near the climate controls on the center stack. To operate, the ignition must be in ON/RUN.

Press or to heat the driver or passenger seat cushion and seatback.

Press or to ventilate the driver or passenger seat.

Press the button once for the highest setting. With each press of the button, the seat will change to the next lower setting, and then to the off setting. The indicator lights above the buttons indicate three for the highest setting and one for the lowest. If the front heated seats are on high, the level may automatically be lowered after approximately 30 minutes.

See *Heated and Ventilated Front Seats* ⇨ *65*.

Auto Heated and Ventilated Seats

When the vehicle is on, this feature will automatically activate the heated or ventilated seats at the level required by the vehicle's interior temperature.

The active high, medium, low, or off heated or ventilated seat level will be indicated by the manual heated or ventilated seat buttons on the center stack. Use the manual heated or ventilated seat buttons on the center stack to turn auto heated or ventilated seats off.

If the passenger seat is unoccupied, the auto heated or ventilated seats feature will not activate that seat. The auto heated or ventilated seats feature can be programmed to always be enabled when the vehicle is on.

The heated or ventilated seats will not turn on during a remote start unless they are enabled in the vehicle personalization menu.

See *Vehicle Personalization* ⇨ *158*.

Head Restraint Adjustment

Object-ID=4080790 Owner=Landstrom, Michael
LMD=08-Oct-2015 LMB=Landstrom, Michael

If equipped with base seats, the vehicle's front seats have adjustable head restraints in the outboard seating positions.

If equipped with high performance seats, the vehicle's front seats have head restraints in the outboard seating positions that cannot be adjusted.

Do not drive until the head restraints for all occupants are installed and adjusted properly.

To achieve a comfortable seating position, change the seatback recline angle as little as necessary while keeping the seat and the head restraint height in the proper position.

See *Head Restraints* ⇨ *58* and *Power Seat Adjustment* ⇨ *59*.

Safety Belts

Object-ID=2239828 Owner=Foster, Cindi
LMD=26-Jan-2016 LMB=Clark, Lorien

1966388

Refer to the following sections for important information on how to use safety belts properly:

- *Safety Belts* ⇨ *69*.

- *How to Wear Safety Belts Properly* ⇨ *71*.
- *Lap-Shoulder Belt* ⇨ *71*.
- *Lower Anchors and Tethers for Children (LATCH System)* ⇨ *95*.

Passenger Sensing System

Object-ID=2756966 Owner=Foster, Cindi
LMD=26-Jan-2016 LMB=Clark, Lorien

United States

2920323

Canada and Mexico

2048776

The passenger sensing system will turn off the front outboard passenger frontal airbag and knee airbag under certain conditions. No other airbag is affected by the passenger sensing system. See *Passenger Sensing System* ⇨ *83*.

The passenger airbag status indicator lights on the overhead console are visible when the vehicle is started. See *Passenger Airbag Status Indicator* ⇨ *130*.

Mirror Adjustment

Object-ID=3609633 Owner=Szydlowski, Corinna
LMD=08-Oct-2015 LMB=Clark, Lorien

Exterior

2916815

Controls for the outside power mirrors are on the driver door.

To adjust each mirror:

1. Press (L) or (R) to select the driver or passenger side mirror.
2. Press the arrows on the control pad to move the mirror up, down, right, or left.

3. Adjust each mirror so that a little of the vehicle and the area behind it can be seen.
4. Return the selector switch to the center position.

See *Power Mirrors ⇨ 49*.

Interior

The vehicle has an automatic dimming inside rearview mirror. Automatic dimming reduces the glare of headlamps from behind. The dimming feature comes on when the vehicle is started.

See *Automatic Dimming Rearview Mirror ⇨ 50*.

Steering Wheel Adjustment

Object-ID=3272981 Owner=Parker, Cynthia
LMD=16-May-2013 LMB=Parker, Cynthia

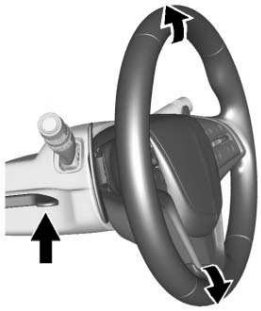

3400926

To adjust the steering wheel:

1. Pull the lever down.
2. Move the steering wheel up or down.
3. Pull or push the steering wheel closer or away from you.
4. Pull the lever up to lock the steering wheel in place.

Power Tilt and Telescoping Wheel

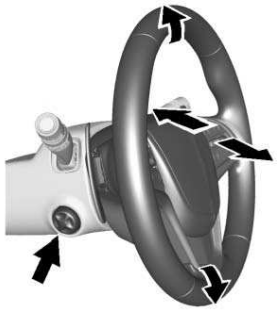

3400920

If equipped, the control is on the left side of the steering column.

- Push the control up or down to tilt the steering wheel up or down.
- Push the control forward or rearward to move the steering wheel toward the front or rear of the vehicle.

Do not adjust the steering wheel while driving.

To set the power tilt wheel memory position, see *Memory Seats ⇨ 63*.

Interior Lighting

Object-ID=4083972 Owner=Parker, Cynthia
LMD=11-Feb-2015 LMB=Parker, Cynthia

Dome Lamp

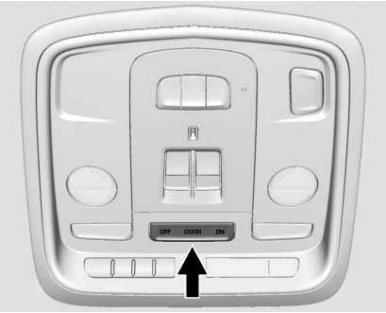

3379338

To change the dome lamp settings, press the following:

OFF : Turns the lamp off, even when a door is open.

DOOR : The lamp comes on when a door is opened.

ON : Turns the lamp on.

Reading Lamps

There are front and rear reading lamps on the overhead console and over the rear passenger doors. These lamps come on when any door is opened.

To manually turn the reading lamps on or off:

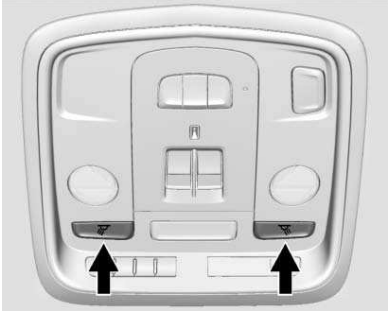

3379339

Press or next to each overhead console reading lamp.

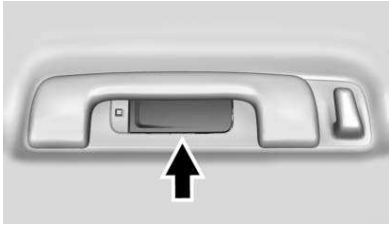

4083265

Press the lamp lenses over the rear passenger doors.

For more information on interior lighting, see *Instrument Panel Illumination Control* ⇨ *174*.

Exterior Lighting

Object-ID=3272985 Owner=Parker, Cynthia
LMD=23-Apr-2014 LMB=Parker, Cynthia

2742865

Cadillac CTS/CTS-V Owner Manual (GMNA-Localizing-U.S./Canada-2ndPrint-11254870) - 2017 - Final Review - 6/14/16

There are four positions:

⏻ **:** Turns off the exterior lamps. The knob returns to the AUTO position after it is released. Turn to ⏻ again to reactivate the AUTO mode. In Canada, the headlamps will automatically reactivate when the vehicle is shifted out of P (Park).

AUTO : Automatically turns the exterior lamps on and off, depending on outside lighting.

: Turns on the parking lamps including all lamps, except the headlamps.

: Turns on the headlamps together with the parking lamps and instrument panel lights.

See *Exterior Lamp Controls* ⇨ *169* and *Daytime Running Lamps (DRL)* ⇨ *172*.

Windshield Wiper/Washer

Object-ID=3273010 Owner=Parker, Cynthia
LMD=16-Jun-2015 LMB=Parker, Cynthia

3272353

With the ignition in ACC/ACCESSORY or ON/RUN/START, move the lever to select the wiper speed.

HI : Use for fast wipes.

LO : Use for slow wipes.

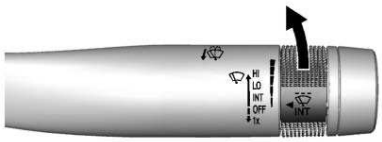

3272708

INT : Use this setting for intermittent wipes or Rainsense™, if equipped. For intermittent wipes, move the windshield wiper lever to INT. Turn the INT band up for more frequent wipes or down for less frequent wipes.

If equipped with Rainsense and the feature is enabled in vehicle personalization, move the windshield wiper lever to INT and turn the INT band to adjust the sensitivity to moisture.

- Turn the band up for more sensitivity to moisture.
- Turn the band down for less sensitivity to moisture.
- Move the windshield wiper lever out of the INT position to deactivate Rainsense.

To turn the Rainsense feature on or off, see “Rain Sense Wipers” under *Vehicle Personalization* ⇨ *158*.

OFF : Use to turn the wipers off.

1X : For a single wipe, briefly move the lever down. For several wipes, hold the lever down.

↓ **:** Pull the lever toward you to spray windshield washer fluid and activate the wipers.

See *Windshield Wiper/Washer* ⇨ *113*.

Climate Controls

Object-ID=4535299 Owner=Parker, Cynthia
LMD=08-Jun-2016 LMB=Parker, Cynthia

The climate control buttons and the touch screen are used to adjust the heating, cooling, and ventilation.

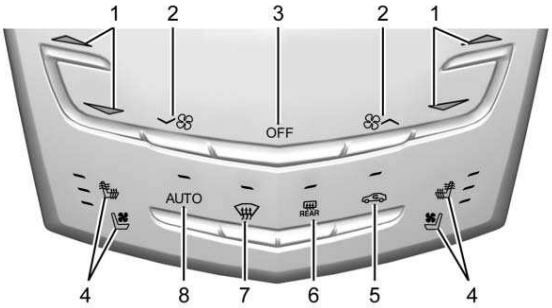

Climate Control Buttons

4003127

1. Driver and Passenger Temperature Controls
2. Fan Control
3. OFF (Fan)
4. Driver and Passenger Heated and Ventilated Seats (If Equipped)
5. Recirculation
6. Rear Window Defogger
7. Defrost
8. AUTO (Automatic Operation)

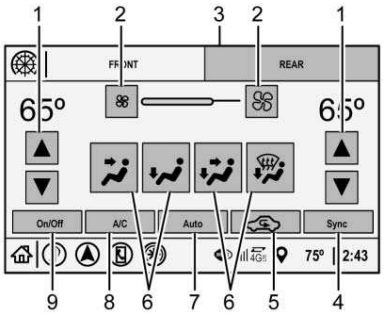

Climate Touch Screen Controls

4535192

1. Driver and Passenger Temperature Controls
2. Fan Controls
3. Rear (Rear Climate Control Touch Screen)
4. SYNC (Synchronized Temperature)
5. Air Delivery Mode Control
6. Recirculation
7. Auto (Automatic Operation)
8. A/C (Air Conditioning)

Cadillac CTS/CTS-V Owner Manual (GMNA-Localizing-U.S./Canada-2ndPrint-11254870) - 2017 - Final Review - 6/14/16

9. On/Off

See *Dual Automatic Climate Control System* ⇨ *190* and *Rear Climate Control System* ⇨ *195* (if equipped).

Transmission

Object-ID=2964508 Owner=Byrne, Matthew
LMD=20-Aug-2015 LMB=Byrne, Matthew

Tap Shift

If equipped, permanent Tap Shift Mode may be entered with the shift lever in D (Drive), by pressing the M (Manual Mode) button on the top of the shift lever.

Temporary Tap Shift Mode may be entered while in D (Drive) using the tap shift controls on the back of the steering wheel.

See *Manual Mode* ⇨ *226*.

Starting the Engine

Object-ID=2381599 Owner=Byrne, Matthew
LMD=01-Sep-2015 LMB=Patchak, Roxanne

When first starting the vehicle, the engine idle speed will be elevated to allow the catalytic converter, an emissions control device, to quickly reach operating temperature. After approximately 20 seconds, the engine will begin to transition to its normal, quieter idle speed, which can vary depending on the temperature. This is normal operation.

Vehicle Features

Infotainment System

Object-ID=4533551 Owner=Mason, Scott
LMD=06-Jun-2016 LMB=Mason, Scott

See the infotainment manual for information on the radio and available features.

Steering Wheel Controls

Object-ID=4533581 Owner=Mason, Scott
LMD=06-Jun-2016 LMB=Mason, Scott

The infotainment system can be operated by using the steering wheel controls. See "Steering Wheel Controls" in the infotainment manual.

Cruise Control

Object-ID=3686809 Owner=Parker, Cynthia
LMD=21-Jan-2014 LMB=Parker, Cynthia

3287351

: Press to turn the system on and off. A white indicator appears in the instrument cluster when cruise is turned on.

+RES : If there is a set speed in memory, press the control up briefly to resume to that speed or press and hold to accelerate. If the cruise control is already active, use to increase vehicle speed. To increase speed by 1 km/h (1 mph), press +RES up to the first detent. To increase speed to the next 5 km/h (5 mph) mark on the speedometer, press +RES up to the second detent.

SET– : Press the control down briefly to set the speed and activate cruise control. If cruise control is already active, use to decrease vehicle speed. To decrease speed by 1 km/h (1 mph), press SET– down to the first detent. To decrease speed to the next 5 km/h (5 mph) mark on the speedometer, press SET– down to the second detent.

: Press to disengage cruise control without erasing the set speed from memory.

See *Cruise Control* ⇨ *238* or *Adaptive Cruise Control* ⇨ *240* (if equipped).

Driver Information Center (DIC)

Object-ID=2857585 Owner=Owens, Lynnette
LMD=07-Oct-2015 LMB=Clark, Lorien

The DIC display is in the instrument cluster. It shows the status of many vehicle systems.

2852090

∧ or ∨ : Press to move up or down in a list.

< or > : Press to move between the interactive display zones in the cluster. Press < to go back to the previous menu.

SEL : Press to open a menu or select a menu item. Press and hold to reset values on certain screens.

See *Driver Information Center (DIC)* ⇨ *140*.

Cadillac CTS/CTS-V Owner Manual (GMNA-Localizing-U.S./Canada-2ndPrint-11254870) - 2017 - Final Review - 6/14/16

Forward Collision Alert (FCA) System

Object-ID=2718543 Owner=Owens, Lynnette
LMD=07-Oct-2015 LMB=Clark, Lorien

If equipped, FCA may help avoid or reduce the harm caused by front-end crashes. FCA provides a green indicator, , when a vehicle is detected ahead. This indicator displays amber if you follow a vehicle much too closely. When approaching a vehicle ahead too quickly, FCA provides a flashing red alert on the windshield and rapidly beeps or pulses the driver seat.

See *Forward Collision Alert (FCA) System* ⇨ *257*.

Forward Automatic Braking (FAB)

Object-ID=4325518 Owner=Owens, Lynnette
LMD=30-Nov-2015 LMB=Owens, Lynnette

If the vehicle has Adaptive Cruise Control (ACC), it also has FAB, which includes Intelligent Brake Assist (IBA). When the system detects a vehicle ahead in your path that is traveling in the same direction that you may be about to crash into, it can provide a boost to braking or automatically brake the vehicle. This can help avoid or lessen the severity of crashes when driving in a forward gear.

See *Forward Automatic Braking (FAB)* ⇨ *259*.

Lane Keep Assist (LKA)

Object-ID=3683613 Owner=Owens, Lynnette
LMD=07-Oct-2015 LMB=Clark, Lorien

If equipped, LKA may help avoid crashes due to unintentional lane departures. It may assist by gently turning the steering wheel if the vehicle approaches a detected lane marking without using a turn signal in that direction. It may also provide a Lane Departure Warning (LDW) alert as the lane marking is crossed. The system will not assist or alert if it detects that you are actively steering. Override LKA by turning the steering wheel. LKA uses a camera to detect lane markings between 60 km/h (37 mph) and 180 km/h (112 mph).

See *Lane Departure Warning (LDW)* ⇨ *263* and *Lane Keep Assist (LKA)* ⇨ *263*.

Lane Change Alert (LCA)

Object-ID=4016083 Owner=Owens, Lynnette
LMD=07-Oct-2015 LMB=Clark, Lorien

If equipped, the LCA system is a lane-changing aid that assists drivers with avoiding lane change crashes that occur with moving vehicles in the side blind zone (or spot) areas or with vehicles rapidly approaching these areas from behind. The LCA warning display will light up in the corresponding outside side mirror and will flash if the turn signal is on. The Side Blind Zone Alert (SBZA) system is included as part of the LCA system.

See *Side Blind Zone Alert (SBZA)* ⇨ *261* and *Lane Change Alert (LCA)* ⇨ *261*.

Surround Vision (CTS Only)

Object-ID=4502728 Owner=Owens, Lynnette
LMD=26-Apr-2016 LMB=Owens, Lynnette

If equipped, views around the vehicle display on the center stack to aid with parking and low-speed maneuvers.

See “Surround Vision (CTS Only)” under *Assistance Systems for Parking or Backing* ⇨ *250*.

Front Vision Camera

If equipped, a view of the area in front of the vehicle displays on the center stack to aid with parking and low-speed maneuvers.

See “Front Vision Camera” under *Assistance Systems for Parking or Backing* ⇨ *250*.

Curb View Camera (CTS-V Only)

Object-ID=4087214 Owner=Owens, Lynnette LMD=07-Oct-2015 LMB=Clark, Lorien

If equipped, a view of the area in front of the vehicle displays on the center stack to aid with parking and low-speed maneuvers. The display shows a front, top down view at the top of the screen and left and right front camera images on the bottom.

See “Curb View Camera (CTS-V Series Only)” under *Assistance Systems for Parking or Backing* ⇨ *250*.

Rear Vision Camera (RVC)

Object-ID=2718564 Owner=Owens, Lynnette LMD=11-Apr-2016 LMB=Owens, Lynnette

If equipped, RVC displays a view of the area behind the vehicle on the infotainment display when the vehicle is shifted into R (Reverse) to aid with parking and low-speed backing maneuvers.

See *Assistance Systems for Parking or Backing* ⇨ *250*.

Rear Cross Traffic Alert (RCTA) System

Object-ID=3750572 Owner=Owens, Lynnette LMD=08-Jun-2016 LMB=Owens, Lynnette

If equipped, the RCTA system uses a triangle with an arrow displayed on the infotainment display to warn of traffic behind your vehicle that may cross your vehicle's path while in R (Reverse). In addition, beeps will sound, or the driver seat will pulse.

See *Assistance Systems for Parking or Backing* ⇨ *250*.

Parking Assist

Object-ID=3657650 Owner=Owens, Lynnette LMD=07-Oct-2015 LMB=Clark, Lorien

If equipped, Rear Parking Assist (RPA) uses sensors on the rear bumper to assist with parking and avoiding objects while in R (Reverse).
It operates at speeds less than 8 km/h (5 mph). RPA may display a warning triangle on the Rear Vision Camera screen and a graphic on the instrument cluster to provide the object distance. In addition, multiple beeps or seat pulses may occur if very close to an object.

The vehicle may also have the Front Parking Assist system.

See *Assistance Systems for Parking or Backing* ⇨ *250*.

Automatic Parking Assist (APA)

Object-ID=3709582 Owner=Owens, Lynnette LMD=07-Oct-2015 LMB=Clark, Lorien

If equipped, the APA system helps to search for and maneuver the vehicle into parallel or perpendicular parking spots using automatic steering, DIC

displays, and beeps. When the vehicle speed is below 30 km/h (18 mph), press P to enable the system.

See "Automatic Parking Assist (APA)" under *Assistance Systems for Parking or Backing* ⇨ *250*.

Reverse Automatic Braking (RAB)

Object-ID=3750573 Owner=Owens, Lynnette
LMD=07-Oct-2015 LMB=Clark, Lorien

If the vehicle has Adaptive Cruise Control (ACC) it also has the RAB system, which is designed to help avoid or reduce the harm caused by backing crashes when the vehicle is shifted into R (Reverse). If the system detects the vehicle is backing too fast to avoid a crash with a detected object behind your vehicle in your path, it may automatically brake hard to a stop.

See *Assistance Systems for Parking or Backing* ⇨ *250*.

Vehicle-to-Vehicle

Object-ID=4537691 Owner=Owens, Lynnette
LMD=09-Jun-2016 LMB=Owens, Lynnette

If equipped, this technology communicates with other Vehicle-to-Vehicle (V2V) — equipped vehicles. It can help drivers avoid crashes and traffic congestion. V2V technology alerts when other V2V-equipped vehicles ahead are braking hard, are disabled, or may be on slippery roads. See *Vehicle-to-Vehicle* ⇨ *265*.

Power Outlets

Object-ID=3273157 Owner=Parker, Cynthia
LMD=08-Apr-2016 LMB=Parker, Cynthia

Power Outlets 12 Volt Direct Current

Accessory power outlets can be used to plug in electrical equipment, such as a cell phone or MP3 player.

The vehicle has three 12-volt accessory power outlets:

- Inside the center console storage in front of the armrest cover.
- Inside the storage area under the armrest cover.
- Inside the storage area on the rear of the center console, if equipped.

These outlets are powered while the vehicle is in ON/RUN/START or ACC/ACCESSORY mode, or until the driver door is opened within 10 minutes of turning off the vehicle.

Lift the cover to access the accessory power outlet.

See *Power Outlets* ⇨ *116*.

Universal Remote System

Object-ID=3286996 Owner=Cusenza, Mark
LMD=08-Oct-2015 LMB=Clark, Lorien

2718354

If equipped, this system provides a way to replace up to three remote control transmitters used to activate devices such as garage door openers, security systems, and home automation devices.

Read the instructions completely before attempting to program the Universal Remote system. Because of the steps involved, it may be helpful to have another person available to assist you with programming the Universal Remote system.

See *Universal Remote System* ⇨ *163*.

Sunroof

Object-ID=4379257 Owner=Perkins, Frank LMD=10-Feb-2016 LMB=Perkins, Frank

If equipped, the sunroof will only operate when the ignition is in ON/RUN or ACC/ACCESSORY, or when Retained Accessory Power (RAP) is active. See *Retained Accessory Power (RAP)* ⇨ *219*.

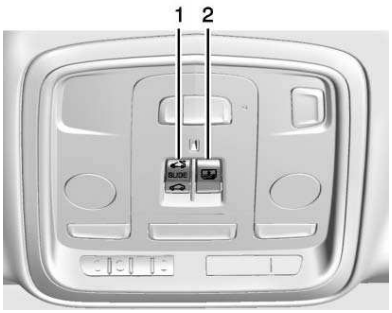

2916816

The driver side switch (1) operates the sunroof.

Vent : Press and release (1) to vent the sunroof. The sunshade will automatically open approximately 38 cm (15 in). Press and hold (1) to close the sunroof vent.

Express-Open/Express-Close : With the sunroof in the vent position, press (1) a second time to express-open the sunroof. Press (1) to express-close the sunroof. To stop the sunroof partway, press the switch again.

The passenger side switch (2) operates the sunshade. Press and release (2) to express-open or express-close the sunshade. To stop the sunshade partway, press the switch again.

See *Sunroof* ⇨ *55*.

Cadillac CTS/CTS-V Owner Manual (GMNA-Localizing-U.S./Canada-2ndPrint-11254870) - 2017 - Final Review - 6/14/16

Performance and Maintenance

Traction Control/Electronic Stability Control

Object-ID=4451466 Owner=Garcia, Sid
LMD=10-Mar-2016 LMB=Garcia, Sid

The Traction Control System (TCS) limits wheel spin. The system turns on automatically every time the vehicle is started.

StabiliTrak assists with directional control of the vehicle in difficult driving conditions. The system turns on automatically every time the vehicle is started.

- To turn off TCS, press and release on the center console. illuminates in the instrument cluster. The appropriate DIC message is displayed. See *Ride Control System Messages* ⇨ *154*.
- Press again to turn traction control back on.
- To turn off both TCS and StabiliTrak, press and hold on the center console until and illuminate in the instrument cluster. The appropriate DIC message displays. See *Ride Control System Messages* ⇨ *154*.
- Press again to turn on both systems.

See *Traction Control/Electronic Stability Control* ⇨ *230*.

The vehicle has Driver Mode Control and may have Competitive Driving Mode. See *Driver Mode Control* ⇨ *231* and *Competitive Driving Mode* ⇨ *235*.

Tire Pressure Monitor

Object-ID=2233928 Owner=Rosekrans, Dee
LMD=02-Jul-2012 LMB=Rocha, Wendy

This vehicle may have a Tire Pressure Monitor System (TPMS).

1970731

The low tire pressure warning light alerts to a significant loss in pressure of one of the vehicle's tires. If the warning light comes on, stop as soon as possible and inflate the tires to the recommended pressure shown on the Tire and Loading Information label. See *Vehicle Load Limits* ⇨ *211*. The warning light will remain on until the tire pressure is corrected.

The low tire pressure warning light may come on in cool weather when the vehicle is first started, and then turn off as the vehicle is driven. This may be an early indicator that the tire pressures are getting low and the tires need to be inflated to the proper pressure.

The TPMS does not replace normal monthly tire maintenance. Maintain the correct tire pressures.

See *Tire Pressure Monitor System* ⇨ *327*.

Fuel (LGX 3.6L V6 Engine)

Object-ID=4197283 Owner=Dobson, Bert
LMD=14-Sep-2015 LMB=Dobson, Bert

4196741

Regular Fuel

Use only unleaded gasoline rated 87 octane or higher in your vehicle. Do not use gasoline with an octane rating lower as it may result in vehicle damage and lower fuel economy. See *Fuel* ⇨ *267*.

Fuel (LTG 2.0L L4 Engine)

Object-ID=4213320 Owner=Dobson, Bert
LMD=11-Jun-2015 LMB=Dobson, Bert

4196747

Premium Recommended Fuel

Use premium 93 octane unleaded gasoline in your vehicle. Unleaded gasoline with an octane rating as low as 87 may be used, but it will reduce performance and fuel economy. See *Fuel* ⇨ *267*.

Fuel (LF3 3.6L V6 Twin Turbo and LT4 6.2L V8 Engines)

Object-ID=4213323 Owner=Dobson, Bert
LMD=10-Jul-2015 LMB=Dobson, Bert

4196752

Premium Required Fuel

Use premium 93 octane unleaded gasoline in your vehicle. Unleaded gasoline with a 91 octane rating may be used, but it will reduce performance and fuel economy. See *Fuel* ⇨ *267*.

E85 or FlexFuel

Object-ID=4213327 Owner=Dobson, Bert
LMD=12-Jun-2015 LMB=Dobson, Bert

4196777

No E85 or FlexFuel

Gasoline-ethanol fuel blends greater than E15 (15% ethanol by volume), such as E85, cannot be used in this vehicle.

Engine Oil Life System

Object-ID=3218140 Owner=Dobson, Bert
LMD=20-Jul-2015 LMB=Dobson, Bert

The engine oil life system calculates engine oil life based on vehicle use and displays the CHANGE ENGINE OIL SOON message when it is time to change the engine oil and filter. The oil life system should be reset to 100% only following an oil change.

Resetting the Oil Life System

1. Using the DIC buttons, display REMAINING OIL LIFE on the DIC. See *Driver Information Center (DIC)* ⇨ *140* and *Engine Oil Messages* ⇨ *149*.
2. Press and hold SEL to clear the CHANGE ENGINE OIL SOON message and reset the oil life at 100%.

   Be careful not to reset the oil life display accidentally at any time other than after the oil is changed. It cannot be reset accurately until the next oil change.

The oil life system can also be reset as follows:

1. Turn the ignition on with the engine off.
2. Fully press and release the accelerator pedal three times within five seconds.

   If the CHANGE ENGINE OIL SOON message is not on, the system is reset.

See *Engine Oil Life System* ⇨ *291*.

Car Wash Guidelines

Object-ID=4083692 Owner=Perkins, Frank
LMD=07-Oct-2015 LMB=Perkins, Frank

Caution

Object-ID=4215338 LMD=18-Jun-2015

Some automatic car washes can cause damage to the vehicle, wheels and ground effects. Automatic car washes are not recommended, due to lack of clearance for the undercarriage and/or wide rear tires and wheels. See "Washing the Vehicle" under *Exterior Care* ⇨ *353*.

Driving for Better Fuel Economy

Object-ID=2233932 Owner=Perkins, Frank
LMD=22-Sep-2015 LMB=Perkins, Frank

Driving habits can affect fuel mileage. Here are some driving tips to get the best fuel economy possible.

- Avoid fast starts and accelerate smoothly.
- Brake gradually and avoid abrupt stops.

- Avoid idling the engine for long periods of time.
- When road and weather conditions are appropriate, use cruise control.
- Always follow posted speed limits or drive more slowly when conditions require.
- Keep vehicle tires properly inflated.
- Combine several trips into a single trip.
- Replace the vehicle's tires with the same TPC Spec number molded into the tire's sidewall near the size.
- Follow recommended scheduled maintenance.

Roadside Service (US/CAN)

Object-ID=2915198 Owner=Smith, James
LMD=09-Jun-2016 LMB=Clark, Lorien

U.S.: 1-800-224-1400

Canada: 1-800-882-1112

TTY Users (U.S. Only): 1-888-889-2438

New Cadillac owners are automatically enrolled in the Roadside Service Program.

See *Roadside Service (US/CAN)* ⇨ *388* or *Roadside Service (MEXICO)* ⇨ *390*.

Roadside Service (MEXICO)

Object-ID=2915199 Owner=Smith, James
LMD=09-Jun-2016 LMB=Clark, Lorien

Call 01-800-466-0805.

New Cadillac owners are automatically enrolled in the Roadside Service Program.

See *Roadside Service (US/CAN)* ⇨ *388* or *Roadside Service (MEXICO)* ⇨ *390*.

Cadillac CTS/CTS-V Owner Manual (GMNA-Localizing-U.S./Canada-2ndPrint-11254870) - 2017 - Final Review - 6/14/16

Keys, Doors, and Windows

Keys and Locks
Keys 31
Remote Keyless Entry (RKE) System 32
Remote Keyless Entry (RKE) System Operation 32
Remote Vehicle Start 38
Door Locks 40
Power Door Locks 42
Delayed Locking 42
Automatic Door Locks 42
Lockout Protection 43
Safety Locks 43

Doors
Trunk 44

Vehicle Security
Vehicle Security 46
Vehicle Alarm System 46
Immobilizer 47
Immobilizer Operation 47

Exterior Mirrors
Convex Mirrors 48
Manual Mirrors 49
Power Mirrors 49
Folding Mirrors 49
Heated Mirrors 49
Automatic Dimming Mirror 49
Reverse Tilt Mirrors 50

Interior Mirrors
Interior Rearview Mirrors 50
Automatic Dimming Rearview Mirror 50
Rear Camera Mirror 50

Windows
Windows 52
Power Windows 52
Sun Visors 54
Rear Window Sunshade 55

Roof
Sunroof 55

Keys and Locks

Keys

Object-ID=4502522 Owner=Szydlowski, Corinna LMD=26-Apr-2016 LMB=Szydlowski, Corinna

⚠ Warning

Object-ID=2716351 LMD=22-Nov-2011

Leaving children in a vehicle with a Remote Keyless Entry (RKE) transmitter is dangerous and children or others could be seriously injured or killed. They could operate the power windows or other controls or make the vehicle move. The windows will function with the RKE transmitter in the vehicle, and children or others could be caught in the path of a closing window. Do not leave children in a vehicle with an RKE transmitter.

1968737

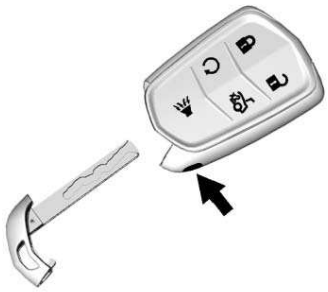

2919924

This key, inside the Remote Keyless Entry (RKE) transmitter, is used for the driver door, rear folding seats and rear seat pass-through door.

To remove the key, press the button on the side of the transmitter near the bottom, and pull the key out. Never pull the key out without pressing the button.

See your dealer if a new key is needed.

Contact Roadside Service if locked out of the vehicle. See *Roadside Service (US/CAN)* ⇨ *388* or *Roadside Service (MEXICO)* ⇨ *390*.

With an active OnStar subscription, an OnStar Advisor may remotely unlock the vehicle. See *OnStar Overview (MEXICO)* ⇨ *402* or *OnStar Overview (US/CAN)* ⇨ *401*.

Remote Keyless Entry (RKE) System

Object-ID=3581119 Owner=Szydlowski, Corinna LMD=02-Feb-2016 LMB=Szydlowski, Corinna

See *Radio Frequency Statement (US/CAN)* ⇨ *397* or *Radio Frequency Statement (MEXICO1)* ⇨ *397* or *Radio Frequency Statement (MEXICO)* ⇨ *397*.

If there is a decrease in the Remote Keyless Entry (RKE) operating range:

- Check the distance. The transmitter may be too far from the vehicle.
- Check the location. Other vehicles or objects may be blocking the signal.
- Check the transmitter's battery. See “Battery Replacement” later in this section.
- If the transmitter is still not working correctly, see your dealer or a qualified technician for service.

Remote Keyless Entry (RKE) System Operation

Object-ID=4375484 Owner=Szydlowski, Corinna LMD=27-Apr-2016 LMB=Szydlowski, Corinna

The Keyless Access system allows for vehicle entry when the transmitter is within 1 m (3 ft). See “Keyless Access Operation” later in this section.

The RKE transmitter may work up to 60 m (197 ft) away from the vehicle.

Keep in mind that other conditions, such as those previously stated, can impact the performance of the transmitter.

2918226

: Press to lock all doors. The turn signal indicators may flash and/or the horn may sound on the second press to indicate locking. See *Vehicle Personalization* ⇨ *158*.

If the driver door is open when is pressed and enabled through vehicle personalization, all doors will lock and then the driver door will immediately unlock. See *Vehicle Personalization* ⇨ *158*. If the passenger door is open when is pressed, all doors lock.

Pressing may also arm the alarm system. See *Vehicle Alarm System* ⇨ *46*.

Pressing lock will also lock the fuel door.

: Press to unlock the driver door. Press again within five seconds to unlock all doors. The RKE transmitter can be programmed to unlock all doors on the first button press. See *Vehicle Personalization* ⇨ *158*. When remotely unlocking the vehicle at night, the headlamps and back-up lamps will come on for about 30 seconds to light your approach to the vehicle. The turn signal indicators may flash to indicate unlocking.

Pressing will disarm the alarm system. See *Vehicle Alarm System* ⇨ *46*.

Press and hold until the windows fully open. Windows will not operate unless remote window operation is enabled. See *Vehicle Personalization* ⇨ *158*.

Pressing lock will also unlock the fuel door.

: Press and release and then immediately press and hold for at least four seconds to start the engine from outside the vehicle using the RKE transmitter. See *Remote Vehicle Start* ⇨ *38*.

: Press and release one time to initiate vehicle locator. The exterior lamps flash and the horn chirps three times. Press and hold for more than three seconds to sound the panic alarm. The horn sounds and the turn signal lamps flash for 30 seconds, or until is pressed again or the vehicle is started.

: Press twice quickly to release the trunk.

Keyless Access Operation

The Keyless Access system lets you lock and unlock the doors and access the trunk without removing the RKE transmitter from your pocket, purse, briefcase, etc. The RKE transmitter must be within 1 m (3 ft) of the door

being opened. If equipped, there will be a button on the outside door handles.

The Keyless Access system can be programmed to unlock all doors on the first lock/unlock press from the driver door. See *Vehicle Personalization* ⇨ *158*.

Keyless Unlocking/Locking from the Driver Door

When the doors are locked and the RKE transmitter is within 1 m (3 ft) of the door handle, pressing the lock/unlock button on the driver door handle will unlock the driver door. If the lock/unlock button is pressed again within five seconds, all passenger doors will unlock.

Driver Door Shown, Passenger Similar

2578630

Pressing the lock/unlock button will cause all doors to lock if any of the following occur:

- It has been more than five seconds since the first lock/unlock button press.
- Two lock/unlock button presses were used to unlock all doors.
- Any vehicle door has opened and all doors are now closed.

Keyless Unlocking/Locking from the Passenger Doors

When the doors are locked and the RKE transmitter is within 1 m (3 ft) of the door handle, pressing the lock/unlock button on a passenger door handle will unlock all doors. Pressing the lock/unlock button will cause all doors to lock if any of the following occur:

- The lock/unlock button was used to unlock all doors.
- Any vehicle door has opened and all doors are now closed.

Passive Locking

The Keyless Access system will lock the vehicle several seconds after all doors are closed if the vehicle is off and at least one transmitter has been removed or none remain in the vehicle.

The fuel door will also lock at this time.

If other electronic devices interfere with the RKE transmitter signal, the vehicle may not detect the RKE transmitter inside the vehicle.

Cadillac CTS/CTS-V Owner Manual (GMNA-Localizing-U.S./Canada-2ndPrint-11254870) - 2017 - Final Review - 6/14/16

If passive locking is enabled, the doors may lock with the RKE transmitter inside the vehicle. Do not leave the RKE transmitter in an unattended vehicle.

To customize the doors to automatically lock when exiting the vehicle, see *Vehicle Personalization* ⇨ *158*.

Temporary Disable of Passive Locking Feature

Temporarily disable the passive locking by pressing and holding 🔒 on the interior door switch with a door open for at least four seconds, or until three chimes are heard. Passive locking will then remain disabled until 🔓 on the interior door is pressed, or until the vehicle is turned on.

Remote Left In Vehicle Alert

When the vehicle is turned off and a remote is left in the vehicle, the horn will chirp three times after all doors are closed. To turn on or off see *Vehicle Personalization* ⇨ *158*.

Remote No Longer In Vehicle Alert

If the vehicle is on, with a door open, and then all doors are closed, the vehicle will check for RKE transmitter(s) inside. If an RKE transmitter is not detected, the DIC will display NO REMOTE DETECTED and the horn will chirp three times.

This occurs only once each time the vehicle is driven. See *Vehicle Personalization* ⇨ *158*.

Keyless Trunk Opening

Press the touch pad on the rear of the trunk above the license plate if the RKE transmitter is within 1 m (3 ft).

Key Access

To access a vehicle with a weak transmitter battery, see *Door Locks* ⇨ *40*.

Programming Transmitters to the Vehicle

Only RKE transmitters programmed to the vehicle will work. If a transmitter is lost or stolen, a replacement can be purchased and programmed through your dealer. The vehicle can be reprogrammed so that lost or stolen transmitters no longer work. Each vehicle can have up to eight transmitters matched to it.

Programming with Recognized Transmitters

A new transmitter can be programmed to the vehicle when there are two recognized transmitters.

To program, the vehicle must be off and all transmitters, both currently recognized and new, must be with you.

1. Remove the vehicle key from the recognized transmitter.
2. Place the two recognized transmitter(s) in the cupholder.
3. Remove the key lock cylinder cap on the driver door handle. See *Door Locks* ⇨ *40*. Insert the vehicle key into the key lock cylinder on the driver door handle, then turn the key counterclockwise to the unlock position five times within 10 seconds.

The Driver Information Center (DIC) displays READY FOR REMOTE #2, 3, 4, ETC.

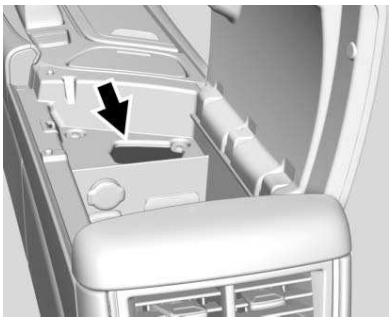

2918184

4. Open the center console, remove the rubber mat, and place the new transmitter in the transmitter pocket.
5. Press ENGINE START/STOP. When the transmitter is learned, the DIC display will show that it is ready to program the next transmitter.
6. Remove the transmitter from the transmitter pocket and press 🔓 or 🔓 on the transmitter.

   To program additional transmitters, repeat Steps 4–6.

   When all additional transmitters are programmed, press and hold ENGINE START/STOP for approximately 12 seconds to exit programming mode.
7. Return the vehicle key back into the transmitter.

Programming without Recognized Transmitters

If two currently recognized transmitters are not available, follow this procedure to program up to eight transmitters. This feature is not available in Canada. This procedure will take approximately 30 minutes to complete. The vehicle must be off and all transmitters to be programmed must be with you.

1. Remove the vehicle key from the transmitter.
2. Remove the key lock cylinder cap on the driver door handle. See *Door Locks* ⇨ *40*. Insert the vehicle key into the key lock cylinder on the driver door handle, then turn the key counterclockwise to the unlock position five times within 10 seconds.

   The Driver Information Center (DIC) displays REMOTE LEARN PENDING, PLEASE WAIT.
3. Wait for 10 minutes until the DIC displays PRESS ENGINE START BUTTON TO LEARN and then press ENGINE START/STOP.

   The DIC display will again show REMOTE LEARN PENDING, PLEASE WAIT.
4. Repeat Step 3 two additional times. After the third time all previously known transmitters will no longer work with the vehicle. Remaining transmitters can be relearned during the next steps.

   The DIC display should now show READY FOR REMOTE # 1.

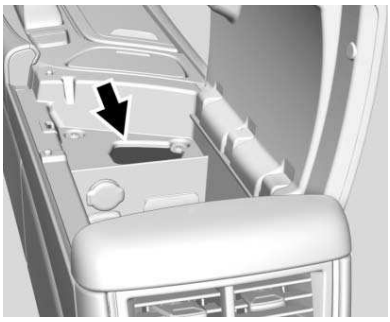

2918184

5. Open the center console, remove the rubber mat, and place the new transmitter in the transmitter pocket.
6. Press ENGINE START/STOP. When the transmitter is learned, the DIC display will show that it is ready to program the next transmitter.
7. Remove the transmitter from the transmitter pocket and press 🔓 or 🔒 on the transmitter.

   To program additional transmitters, repeat Steps 5–7.

   When all additional transmitters are programmed, press and hold ENGINE START/STOP for approximately 12 seconds to exit programming mode.
8. Return the vehicle key back into the transmitter.

Starting the Vehicle with a Low Transmitter Battery

If the transmitter battery is weak or if there is interference with the signal, the DIC may display NO REMOTE DETECTED or NO REMOTE KEY WAS DETECTED PLACE KEY IN TRANSMITTER POCKET THEN START YOUR VEHICLE when starting the vehicle. See *Key and Lock Messages* ⇨ *150*.

To start the vehicle:

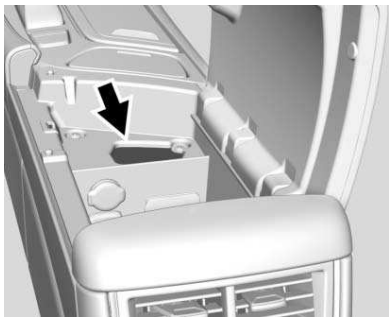

2918184

1. Open the center console, remove the rubber mat, and place the new transmitter in the transmitter pocket.
2. With the vehicle in P (Park) or N (Neutral) press the brake pedal and ENGINE START/STOP.

   Replace the transmitter battery as soon as possible.

Battery Replacement

Caution

Object-ID=2897615 LMD=20-Aug-2012

When replacing the battery, do not touch any of the circuitry on the transmitter. Static from your body could damage the transmitter.

Replace the battery if the REPLACE BATTERY IN REMOTE KEY message displays in the DIC.

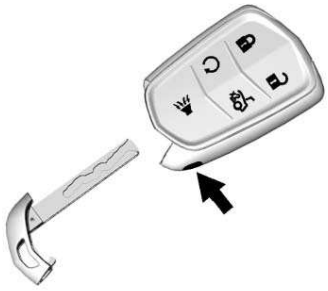

2919924

1. Press the button on the side of the transmitter near the bottom and pull the key out.

3712408

2. Separate the two halves of the transmitter using a flat tool inserted into the bottom center of the transmitter. Do not use the key slot.

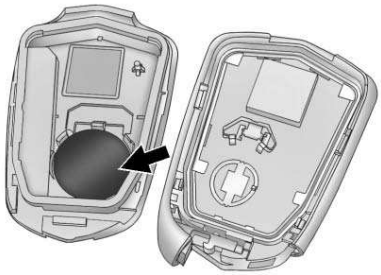

3270865

3. Remove the old battery. Do not use a metal object.
4. Insert the new battery on the back housing, positive side facing down. Replace with a CR2032 or equivalent battery.
5. Align the front and back housing, then snap the transmitter together.

Remote Vehicle Start

Object-ID=3826338 Owner=Szydlowski, Corinna LMD=06-Apr-2016 LMB=Szydlowski, Corinna

This feature allows the engine to be started from outside the vehicle.

: This button will be on the RKE transmitter if the vehicle has remote start.

The climate control system will use the previous settings during a remote start. The rear window defogger may come on during remote start based on cold ambient conditions. The rear defog indicator light does not come on during remote start.

If equipped, the heated and ventilated front seats may also come on when the vehicle personalization setting is enabled. See *Heated and Ventilated Front Seats* ⇨ *65*.

Laws in some local communities may restrict the use of remote starters. For example, some laws may require a person using remote start to have the vehicle in view. Check local regulations for any requirements.

If your vehicle is low on fuel, do not use the remote start feature. The vehicle may run out of fuel.

The RKE transmitter range may be shorter while the vehicle is running.

Other conditions can affect the performance of the transmitter. See *Remote Keyless Entry (RKE) System* ⇨ *32*.

Starting the Engine Using Remote Start

1. Press and release on the RKE transmitter.
2. Immediately press and hold for at least four seconds or until the turn signal lamps flash. This confirms the request to remote start the vehicle has been received.

   During the remote start, the parking lamps will remain on as long as the engine is running.

   The engine will shut off after 10 minutes unless a time extension is done or the ignition is put in ON/RUN.
3. Press the brake pedal and select the ON/RUN ignition mode to drive the vehicle.

Extending Engine Run Time

The engine run time can also be extended by another 10 minutes, if during the first 10 minutes Steps 1–2 are repeated while the engine is still running. An extension can be requested, 30 seconds after starting. This provides a total of 20 minutes.

The remote start can only be extended once.

When the remote start is extended, the second 10 minute period is added on to the first 10 minutes for a total of 20 minutes.

A maximum of two remote starts, or a remote start with an extension, are allowed between ignition cycles.

Then the ignition must be changed to ON/RUN and then back to OFF before the remote start procedure can be used again.

Canceling a Remote Start

To cancel a remote start, do any of the following:

- Press and hold until the parking lamps turn off.

- Turn on the hazard warning flashers.
- Turn the vehicle on and then back off.

Conditions in Which Remote Start Will Not Work

The remote start will not operate if any of the following occur:

- The ignition is in any mode other than off.
- A transmitter is in the vehicle.
- The hood is not closed.
- The hazard warning flashers are on.
- There is an emission control system malfunction.
- The engine coolant temperature is too high.
- The oil pressure is low.
- Two remote vehicle starts have already been used.
- The vehicle is not in P (Park).

Door Locks

Object-ID=4163331 Owner=Szydlowski, Corinna LMD=27-Apr-2016 LMB=Szydlowski, Corinna

⚠ Warning

Object-ID=2218092 LMD=06-Jan-2015

Unlocked doors can be dangerous.

- Passengers, especially children, can easily open the doors and fall out of a moving vehicle. The chance of being thrown out of the vehicle in a crash is increased if the doors are not locked. So, all passengers should wear safety belts properly and the doors should be locked whenever the vehicle is driven.
- Young children who get into unlocked vehicles may be unable to get out. A child can be overcome by extreme heat and can suffer permanent injuries or even death from heat stroke. Always lock the vehicle whenever leaving it.

(Continued)

Warning (Continued)

Object-ID=2218092 LMD=06-Jan-2015

- Outsiders can easily enter through an unlocked door when slowing or stopping the vehicle. Lock the doors to help prevent this from happening.

Keyless Access

2578630

Use the Keyless Access system to lock and unlock the door. When the doors are locked and the Remote Keyless Entry (RKE) transmitter is within 1 m

(3 ft) of the driver door handle, press the lock/unlock button. When unlocking from the driver door, the first press unlocks that door; press again within five seconds to unlock all passenger doors. See *Remote Keyless Entry (RKE) System Operation* ⇨ *32*.

Driver Door Key Cylinder Access

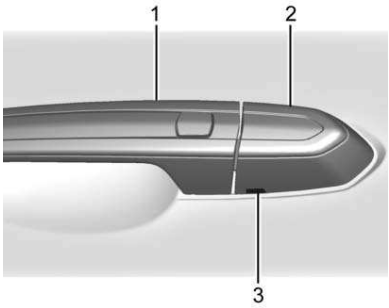

4163324

To access the key cylinder:

1. Pull the door handle (1) to the open position.
2. Insert the key into the slot (3) on the bottom of the cap (2) and pry outward.
3. Move the cap (2) rearward and remove.
4. Use the key in the cylinder.

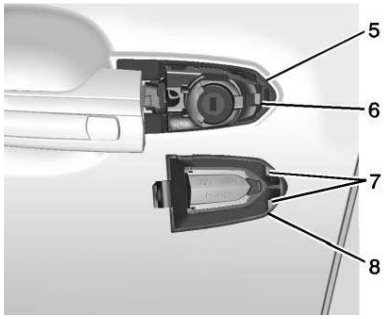

3251230

To replace the cap:

1. Pull the door handle to the open position.
2. Insert the two tabs (7) at the back of the cap (8) between the seal (5) and the metal base (6).

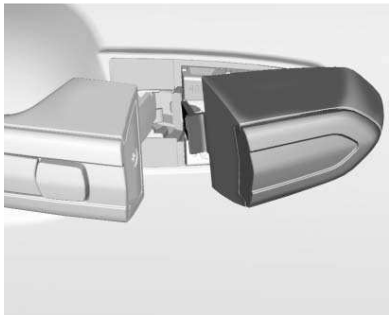

2748681

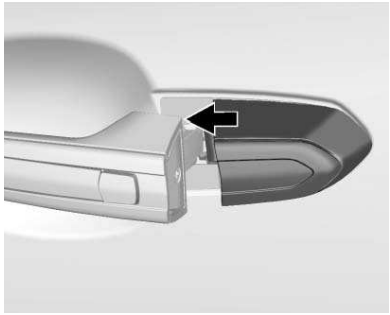

2748682

3. Move the cap forward and press to snap the cap in place.

4. Release the door handle.

Inside the Vehicle

On the rear doors, push down on the door lock knob to lock the door manually. Pull once on the door handle to unlock the door and again to open the door.

Press the power door lock switch to lock or unlock all doors automatically. See *Power Door Locks* ⇨ *42*.

Power Door Locks

Object-ID=2917460 Owner=Szydlowski, Corinna LMD=06-Apr-2016 LMB=Szydlowski, Corinna

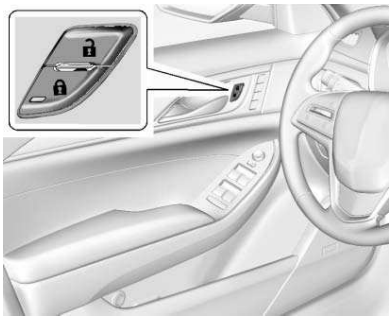

2916811

: Press to lock the doors. The indicator light in the switch will illuminate when activated.

: Press to unlock the doors.

Delayed Locking

Object-ID=4504430 Owner=Szydlowski, Corinna LMD=27-Apr-2016 LMB=Szydlowski, Corinna

This feature delays the actual locking of the doors until five seconds after all doors are closed.

When is pressed on the power door lock switch with the door open, a chime will sound three times indicating that delayed locking is active.

The doors will then lock automatically five seconds after all doors are closed. If a door is reopened before five seconds have elapsed, the five-second timer will reset once all the doors are closed again.

Press on the door lock switch again, or press on the RKE transmitter, to override this feature and lock the doors immediately.

Delayed locking can only be turned on when the Unlocked Door Anti-Lockout feature has been turned off.

Delayed locking can be programmed. See *Vehicle Personalization* ⇨ *158*.

Automatic Door Locks

Object-ID=3271872 Owner=Szydlowski, Corinna LMD=05-Nov-2015 LMB=Szydlowski, Corinna

The doors will lock automatically when all doors are closed, the ignition is on, and the vehicle is shifted out of P (Park).

To unlock the doors:

- Press on the power door lock switch.
- Shift the transmission into P (Park).

Automatic door locking cannot be disabled. Automatic door unlocking can be programmed. See *Vehicle Personalization* ⇨ *158*.

Cadillac CTS/CTS-V Owner Manual (GMNA-Localizing-U.S./Canada-2ndPrint-11254870) - 2017 - Final Review - 6/14/16

Lockout Protection

Object-ID=3459694 Owner=Szydlowski, Corinna
LMD=12-Apr-2016 LMB=Szydlowski, Corinna

If the vehicle is in ACC/ACCESSORY or ON/RUN/START and the power door lock switch is pressed with the driver door open, all the doors will lock and only the driver door will unlock.

If the vehicle is off and locking is requested while a door is open, when all doors are closed the vehicle will check for RKE transmitters inside. If an RKE transmitter is detected and the number of RKE transmitters inside has not reduced, the driver door will unlock and the horn will chirp three times.

Lockout Protection can be manually overridden with the driver door open by pressing and holding on the power door lock switch.

Unlocked Door Anti-Lockout

If Unlocked Door Anti-Lockout is turned on and the vehicle is off, the driver door is open, and locking is requested, all the doors will lock and only the driver door will unlock. The Unlocked Door Anti-Lockout feature can be turned on or off using the vehicle personalization menus. See *Vehicle Personalization* ⇨ *158*.

Safety Locks

Object-ID=2917464 Owner=Szydlowski, Corinna
LMD=08-Oct-2015 LMB=Clark, Lorien

2916818

The rear door safety locks prevent passengers from opening the rear doors from inside the vehicle.

Press to activate the safety locks on the rear doors. The indicator light in the switch will illuminate when activated.

The rear door power windows are also disabled. See *Power Windows* ⇨ *52*.

Press again to deactivate the lockout switch.

If an inside rear door handle is being pulled at the same time the safety lock is deactivated, that door will remain locked and the indicator light may flash. Release the handle, then press the safety lock twice to deactivate the safety locks.

Doors

Trunk

Object-ID=4502550 Owner=Szydlowski, Corinna LMD=26-Apr-2016 LMB=Szydlowski, Corinna

⚠ Warning

Object-ID=2210312 LMD=07-Nov-2011

Exhaust gases can enter the vehicle if it is driven with the liftgate or trunk/hatch open, or with any objects that pass through the seal between the body and the trunk/hatch or liftgate. Engine exhaust contains carbon monoxide (CO) which cannot be seen or smelled. It can cause unconsciousness and even death.

If the vehicle must be driven with the liftgate or trunk/hatch open:

- Close all of the windows.
- Fully open the air outlets on or under the instrument panel.

(Continued)

Warning (Continued)

Object-ID=2210312 LMD=07-Nov-2011

- Adjust the climate control system to a setting that brings in only outside air and set the fan speed to the highest setting. See “Climate Control Systems” in the Index.
- If the vehicle is equipped with a power liftgate, disable the power liftgate function.

See *Engine Exhaust* ⇨ *223*.

Trunk Release

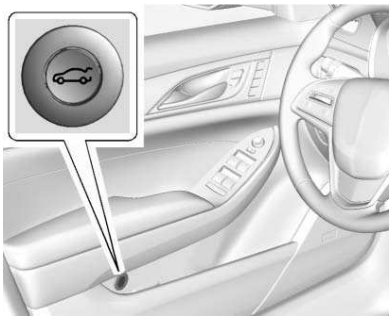

3346209

To open the trunk, the vehicle must be off or the shift lever must be in P (Park).

- Press on the driver door.
- Press twice quickly on the Remote Keyless Entry (RKE) transmitter.

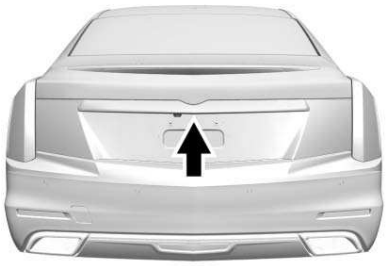

3967343

- Press the touch pad on the rear of the trunk above the license plate when all doors are unlocked.

The trunk can be opened while the vehicle is locked by pressing the touch pad above the license plate while the RKE transmitter is within 1 m (3 ft) of

the rear of the vehicle. See *Remote Keyless Entry (RKE) System Operation* ⇨ *32*.

Close the trunk by pulling on the handle. Do not use the handle as a tie-down.

Rear Seat Pass-Through

Use the rear seat pass-through door when transporting long items.

To open, pull down the rear seat armrest. Pull the lever all the way down to release the door.

To close, push it up and back into place. Try to open the door without pulling up on the lever to make sure it is locked into place.

Emergency Trunk Release Handle

3346156

Caution

Object-ID=2888425 LMD=10-Jul-2012

Do not use the emergency trunk release handle as a tie-down or anchor point when securing items in the trunk as it could damage the handle.

There is a glow-in-the-dark emergency trunk release handle on the trunk lid. This handle will glow following exposure to light. Pull the release handle to open the trunk from the inside.

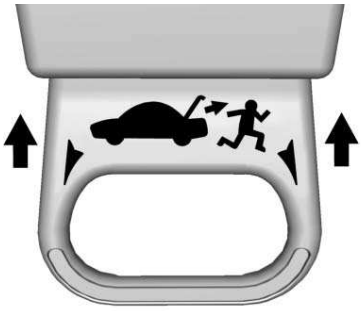

4454085

After pulling the emergency trunk release handle, push the handle back into the bezel.

Vehicle Security

Object-ID=2171094 Owner=Szydlowski, Corinna LMD=07-Jul-2015 LMB=Landstrom, Michael

This vehicle has theft-deterrent features; however, they do not make the vehicle impossible to steal.

Vehicle Alarm System

Object-ID=3357017 Owner=Szydlowski, Corinna LMD=09-Jan-2014 LMB=Szydlowski, Corinna

This vehicle has an anti-theft alarm system.

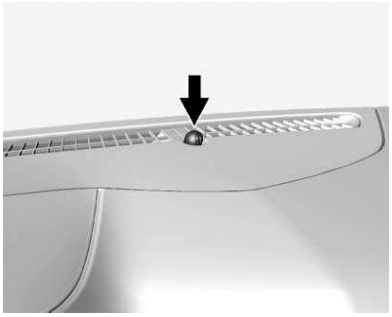

3270866

The indicator light, on the instrument panel near the windshield, indicates the status of the system.

Off : Alarm system is disarmed.

On Solid : Vehicle is secured during the delay to arm the system.

Fast Flash : Vehicle is unsecured. A door, the hood, or the trunk is open.

Slow Flash : Alarm system is armed.

Arming the Alarm System

1. Turn off the vehicle.
2. Lock the vehicle in one of three ways:
   - Use the RKE transmitter.
   - Use the Keyless Access system.
   - With a door open, press 🔒 on the interior of the door.
3. After 30 seconds the alarm system will arm, and the indicator light will begin to slowly flash indicating the alarm system is operating. Pressing 🔒 on the RKE transmitter a second time will bypass the 30-second delay and immediately arm the alarm system.

The vehicle alarm system will not arm if the doors are locked with the key.

If the driver door is opened without first unlocking with the RKE transmitter, the horn will chirp and the lights will flash to indicate pre-alarm. If the vehicle is not started, or the door is not unlocked by pressing 🔓 on the RKE transmitter during the 10-second pre-alarm, the alarm will be activated.

The alarm will also be activated if a passenger door, the trunk, or the hood is opened without first disarming the system. When the alarm is activated, the turn signals flash and the horn sounds for about 30 seconds. The alarm system will then re-arm to monitor the next unauthorized event.

Disarming the Alarm System

To disarm the alarm system or turn off the alarm if it has been activated:

- Press 🔓 on the RKE transmitter.

- Unlock the vehicle using the Keyless Access system.
- Start the vehicle.

To avoid setting off the alarm by accident:

- Lock the vehicle after all occupants have left the vehicle and all doors are closed.
- Always unlock a door with the RKE transmitter or use the Keyless Access system.

Unlocking the driver door with the key will not disarm the system or turn off the alarm.

How to Detect a Tamper Condition

If is pressed on the transmitter and the horn chirps and the lights flash three times, a previous alarm occurred while the system was armed.

If the alarm has been activated, a message will appear on the DIC. See *Security Messages* ⇨ *156*.

Power Sounder and Inclination Sensor

In addition to the standard theft-deterrent system features, this system may also have a power sounder and inclination sensor.

The power sounder provides an audible alarm which is distinct from the vehicle's horn. It has its own power source, and can sound an alarm if the vehicle's battery is compromised.

The inclination sensor can set off the alarm if it senses movement of the vehicle, such as a change in vehicle orientation.

Immobilizer

Object-ID=3581122 Owner=Szydlowski, Corinna LMD=24-Jul-2013 LMB=Szydlowski, Corinna

See *Radio Frequency Statement (US/CAN)* ⇨ *397* or *Radio Frequency Statement (MEXICO1)* ⇨ *397* or *Radio Frequency Statement (MEXICO)* ⇨ *397*.

Immobilizer Operation

Object-ID=3462656 Owner=Szydlowski, Corinna LMD=17-Jul-2015 LMB=Szydlowski, Corinna

This vehicle has a passive theft-deterrent system.

The system does not have to be manually armed or disarmed.

The vehicle is automatically immobilized when the vehicle is turned off.

The immobilization system is disarmed when the pushbutton start is activated to enter the ACC/ACCESSORY mode or the ON/RUN/START mode and a valid transmitter is present in the vehicle.

2326622

The security light, in the instrument cluster, comes on if there is a problem with arming or disarming the theft-deterrent system.

The system has one or more RKE transmitters matched to an immobilizer control unit in the vehicle. Only a correctly matched RKE transmitter will start the vehicle. If the transmitter is ever damaged, you may not be able to start your vehicle.

When trying to start the vehicle, the security light may come on briefly when the ignition is turned on.

If the engine does not start and the security light stays on, there is a problem with the system. Turn the ignition off and try again.

If the vehicle will not change ignition modes (ACC/ACCESSORY, ON/RUN/START, OFF), and the RKE transmitter appears to be undamaged, try another transmitter. Or, you may try placing the transmitter in the transmitter pocket located in the center console. See *Key and Lock Messages* ⇨ *150*.

If the ignition modes will not change with the other transmitter, your vehicle needs service. If the ignition does change modes, the first transmitter may be faulty. See the dealer.

It is possible for the immobilizer system to learn new or replacement RKE transmitters. Up to eight transmitters can be programmed for the vehicle. To program additional transmitters, see “Programming Transmitters to the Vehicle” under *Remote Keyless Entry (RKE) System Operation* ⇨ *32*.

Do not leave the key or device that disarms or deactivates the theft-deterrent system in the vehicle.

Exterior Mirrors

Convex Mirrors

Object-ID=2147968 Owner=Szydlowski, Corinna LMD=22-Apr-2016 LMB=Szydlowski, Corinna

⚠ Warning

Object-ID=2207534 LMD=06-Nov-2008

A convex mirror can make things, like other vehicles, look farther away than they really are. If you cut too sharply into the right lane, you could hit a vehicle on the right. Check the inside mirror or glance over your shoulder before changing lanes.

The passenger side mirror is convex shaped. A convex mirror's surface is curved so more can be seen from the driver seat.

Cadillac CTS/CTS-V Owner Manual (GMNA-Localizing-U.S./Canada-2ndPrint-11254870) - 2017 - Final Review - 6/14/16

Manual Mirrors

Object-ID=3598754 Owner=Szydlowski, Corinna
LMD=08-Oct-2015 LMB=Clark, Lorien

If equipped, push the tab forward for daytime use and pull it rearward for nighttime use to avoid glare of the headlamps from behind.

Power Mirrors

Object-ID=4374969 Owner=Szydlowski, Corinna
LMD=27-Apr-2016 LMB=Szydlowski, Corinna

2916815

Controls for the outside power mirrors are on the driver door.

To adjust each mirror:

1. Press (L) or (R) to select the driver or passenger side mirror.
2. Press the arrows on the control pad to move the mirror up, down, right, or left.
3. Adjust each mirror so that a little of the vehicle and the area behind it can be seen.
4. Return the selector switch to the center position.

Memory Mirrors

If equipped, the vehicle may have memory mirrors. See *Memory Seats* ⇨ *63*.

Side Blind Zone Alert (SBZA)

If equipped, the vehicle may have SBZA. See *Side Blind Zone Alert (SBZA)* ⇨ *261*.

Lane Change Alert (LCA)

If equipped, the vehicle may have LCA. *Lane Change Alert (LCA)* ⇨ *261*.

Folding Mirrors

Object-ID=3222248 Owner=Szydlowski, Corinna
LMD=19-Oct-2015 LMB=Szydlowski, Corinna

Manual Folding Mirrors

The mirrors can be folded inward toward the vehicle to prevent damage when going through an automatic car wash. Push the mirror outward to return it to the original position.

Heated Mirrors

Object-ID=3213968 Owner=Szydlowski, Corinna
LMD=08-Oct-2015 LMB=Clark, Lorien

If equipped with heated mirrors:

: The rear window defogger also heats the outside mirrors.

See *Dual Automatic Climate Control System* ⇨ *190*.

Automatic Dimming Mirror

Object-ID=2142232 Owner=Szydlowski, Corinna
LMD=08-Oct-2015 LMB=Clark, Lorien

If the vehicle has the automatic dimming mirror, the driver outside mirror automatically adjusts for the glare of headlamps behind you.

Reverse Tilt Mirrors

Object-ID=3459805 Owner=Szydlowski, Corinna LMD=08-Oct-2015 LMB=Clark, Lorien

The passenger and/or driver mirror tilt to a preselected position when the vehicle is in R (Reverse). This feature allows the driver to view the curb when parallel parking. The mirror returns to the original position when the vehicle is shifted out of R (Reverse), the ignition is turned off, or if the vehicle is driven in reverse above a predetermined speed.

Turn this feature on or off through vehicle personalization. See *Vehicle Personalization* ⇨ *158*.

Interior Mirrors

Interior Rearview Mirrors

Object-ID=2968584 Owner=Szydlowski, Corinna LMD=08-Oct-2015 LMB=Clark, Lorien

Adjust the rearview mirror for a clear view of the area behind the vehicle.

Do not spray glass cleaner directly on the mirror. Use a soft towel dampened with water.

Automatic Dimming Rearview Mirror

Object-ID=3356448 Owner=Szydlowski, Corinna LMD=08-Oct-2015 LMB=Clark, Lorien

The rearview mirror automatically dims to reduce the glare of the headlamps from behind. This feature comes on when the vehicle is started.

Rear Camera Mirror

Object-ID=4374935 Owner=Szydlowski, Corinna LMD=26-Apr-2016 LMB=Szydlowski, Corinna

If equipped, this automatic dimming mirror provides a wide angle camera view of the area behind the vehicle.

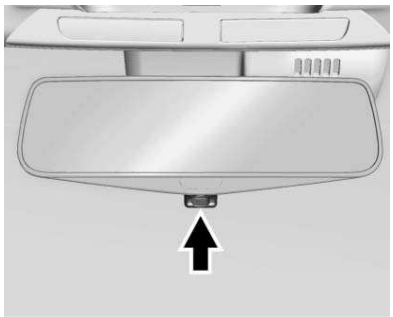

4068795

Pull the tab rearward to turn on the display. Push the tab forward to turn it off. When off, the mirror is automatic dimming. Adjust the mirror for a clear view of the area behind the vehicle while the display is off.

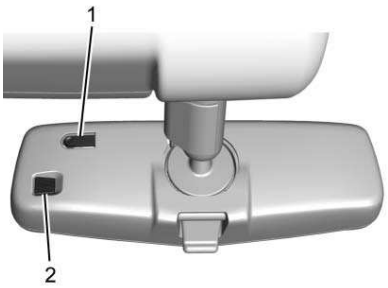

4069016

To adjust the brightness, press the button (1) on the back of the rearview mirror without covering the light sensor (2).

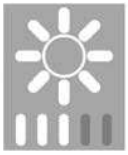

4275330

Each button press cycles the brightness between five settings.

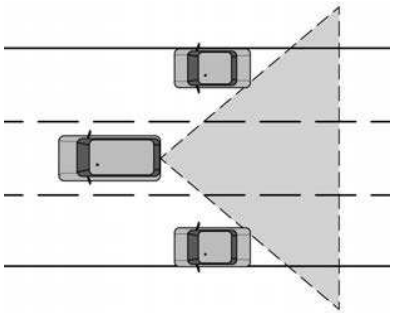

4072259

⚠ Warning

Object-ID=4074630 LMD=25-Sep-2015

The Rear Camera Mirror (RCM) has a limited view. Portions of the road, vehicles, and other objects may not be seen. Do not drive or park the vehicle using only this camera. Objects may appear closer than they are. Check the outside mirrors or glance over your shoulder when making lane changes or merging. Failure to use proper care may result in injury, death, or vehicle damage.

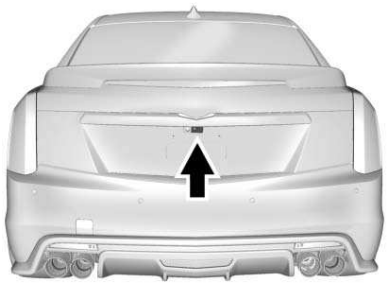

4375474

The camera that provides the Rear Camera Mirror (RCM) image is above the license plate, next to the Rear Vision Camera (RVC).

To clean the rear camera, see *Windshield Wiper/Washer* ⇨ *113*.

Troubleshooting

If the tab is in the rearward position and a blue screen and are displayed in the mirror and the display shuts off, see your dealer for service.

The RCM may not work properly or display a clear image if:

- There is glare from the sun or headlamps. This may obstruct objects from view.
- Dirt, snow, or other debris blocks the camera lens. Clean the lens with a soft damp cloth.
- The back of the vehicle has been damaged and the position and mounting angle of the camera has changed.

Windows

Object-ID=2715175 Owner=Szydlowski, Corinna LMD=08-Oct-2015 LMB=Clark, Lorien

⚠ Warning

Object-ID=2715147 LMD=23-Sep-2011

Never leave a child, a helpless adult, or a pet alone in a vehicle, especially with the windows closed in warm or hot weather. They can be overcome by the extreme heat and suffer permanent injuries or even death from heat stroke.

1970744

The vehicle aerodynamics are designed to improve fuel economy performance. This may result in a pulsing sound when either rear window is down and the front windows are up. To reduce the sound, open either a front window or the sunroof, if equipped.

Power Windows

Object-ID=4375004 Owner=Szydlowski, Corinna LMD=06-Apr-2016 LMB=Szydlowski, Corinna

⚠ Warning

Object-ID=2715150 LMD=23-Sep-2011

Children could be seriously injured or killed if caught in the path of a closing window. Never leave keys in a vehicle with children. When there are children in the rear seat, use the window lockout button to prevent operation of the windows. See *Keys* ⇨ *31*.

Cadillac CTS/CTS-V Owner Manual (GMNA-Localizing-U.S./Canada-2ndPrint-11254870) - 2017 - Final Review - 6/14/16

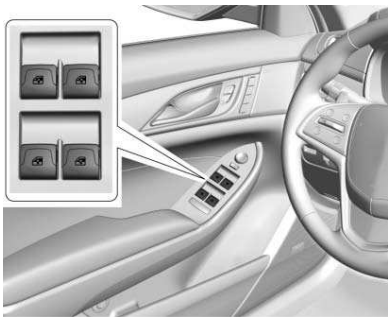

2916813

The windows work when the vehicle is in ON/RUN or ACC/ACCESSORY, or when Retained Accessory Power (RAP) is active. See *Retained Accessory Power (RAP)* ⇨ *219*.

Press or pull the switch to open or close the window.

The windows will be temporarily disabled if the window switches are used repeatedly within a short time.

Window Lockout

2916818

This feature stops the rear door passenger window switches from working.

Press to engage the rear window lockout feature. The indicator light is on when engaged.

This also disables the rear power door locks. See *Safety Locks* ⇨ *43*.

Press again to disengage.

A door may remain locked if that door handle is pulled at the same time the safety lock is disengaged. Release the door handle then press twice.

Window Express Movement

Express-down/up allows the windows to be opened or closed without holding the window switch. Press the window switch fully down or pull it up, and quickly release it to engage. Briefly press or pull the same switch to stop window movement.

Express Window Obstacle Detection

The express-up feature will reverse window movement if it comes in contact with an object. Extreme cold or ice could cause the window to auto-reverse. The window will operate as normal after the object or condition is removed.

Obstacle Detection Override

⚠ Warning

Object-ID=4282606 LMD=24-Nov-2015

If obstacle detection override is activated, the window will not reverse automatically. You or others could be injured and the window could be damaged. Before you use obstacle detection override, make sure that all people and obstructions are clear of the window path.

The window can be closed by holding the window switch in the up position if conditions prevent it from express closing.

Programming the Power Windows

Programming may be necessary if the vehicle's battery has been disconnected or discharged. If the window is unable to express-up, follow these steps to program the window:

To program the window:

1. Close all doors.
2. Place the ignition in ACC/ACCESSORY or ON/RUN.
3. Partially open the window to be programmed, then close it and continue to pull the switch briefly after the window has fully closed.
4. Press the power window switch until the window is fully open and briefly hold.

Remote Window Operation

If equipped, this feature allows all the windows to be opened remotely.
If enabled in vehicle personalization, press and hold 🔓 on the RKE transmitter. See *Vehicle Personalization* ➪ *158*.

Sun Visors

Object-ID=2387096 Owner=Szydlowski, Corinna LMD=22-Sep-2015 LMB=Szydlowski, Corinna

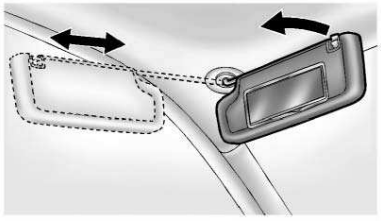

2326151

Pull the sun visor down to block glare. Detach the sun visor from the center mount to pivot to the side window or, if equipped, extend along the rod.

Rear Window Sunshade

Object-ID=3703997 Owner=Szydlowski, Corinna LMD=08-Oct-2015 LMB=Clark, Lorien

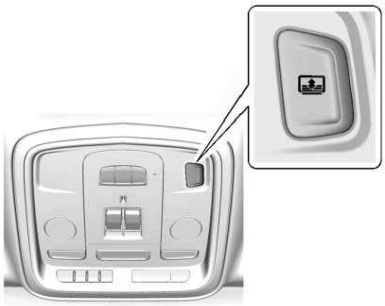

3375052

If equipped with a rear window sunshade, the switch is on the overhead console. The sunshade only operates with the ignition in ON/RUN/START.

To open the sunshade, press and release the switch. The sunshade will fully extend. To close the sunshade, press and release the switch again. The sunshade will fully close.

When shifting the vehicle into R (Reverse), the sunshade will automatically retract if it is extended. It will re-extend after a short delay when shifting into D (Drive).

Rear Passenger Door Sunshades

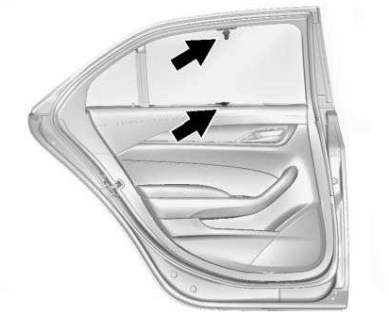

3414247

If equipped, use the handle to pull the sunshade up and attach to the holder at the top of the window. There is also a small shade for the rear corner of the window.

To close the sunshade, use the handle to unhook and hold it while it retracts down.

Roof

Sunroof

Object-ID=4379264 Owner=Perkins, Frank LMD=10-Feb-2016 LMB=Perkins, Frank

If equipped, the sunroof will only operate when the ignition is in ON/RUN or ACC/ACCESSORY, or when Retained Accessory Power (RAP) is active. See *Retained Accessory Power (RAP)* ⇨ *219*.

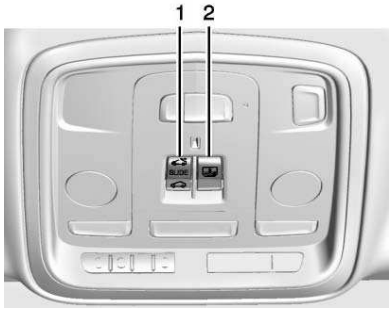

2916816

The driver side switch (1) operates the sunroof.

Vent : Press and release (1) to vent the sunroof. The sunshade will automatically open approximately 38 cm (15 in). Press and hold (1) to close the sunroof vent.

Express-Open/Express-Close : With the sunroof in the vent position, press (1) a second time to express-open the sunroof. Press (1) to express-close the sunroof. To stop the sunroof partway, press the switch again.

The passenger side switch (2) operates the sunshade. Press and release (2) to express-open or express-close the sunshade. To stop the sunshade partway, press the switch again.

Automatic Reversal System

The sunroof/sunshade is equipped with an automatic reversal system that is only active when the sunroof/sunshade is being operated in express mode. If an object is in the path of the sunroof/sunshade while it is express closing, the reversal system will detect the object and stop. In the event of closing difficulties like frost or other conditions, it is possible to override the reversal system. To override the reversal system, close in manual mode. To stop the movement, release the switch.

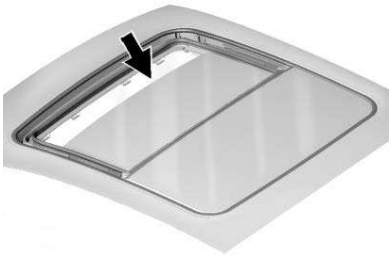

3285327

Dirt and debris may collect on the sunroof seal or in the track. This could cause an issue with sunroof operation or noise. It could also plug the water drainage system. Periodically open the sunroof and remove any obstacles or loose debris. Wipe the sunroof seal and roof sealing area using a clean cloth, mild soap, and water. Do not remove grease from the sunroof.

If water is seen dripping into the water drainage system, this is normal.

Cadillac CTS/CTS-V Owner Manual (GMNA-Localizing-U.S./Canada-2ndPrint-11254870) - 2017 - Final Review - 6/14/16

Seats and Restraints

Head Restraints
Head Restraints 58

Front Seats
Power Seat Adjustment 59
Lumbar Adjustment 61
Thigh Support Adjustment 62
Reclining Seatbacks 62
Memory Seats 63
Heated and Ventilated Front Seats 65

Rear Seats
Rear Seats 66
Heated Rear Seats 68
Rear Seat Pass-Through Door 69

Safety Belts
Safety Belts 69
How to Wear Safety Belts Properly 71
Lap-Shoulder Belt 71
Safety Belt Use During Pregnancy 75
Safety Belt Extender 75
Safety System Check 75
Safety Belt Care 76
Replacing Safety Belt System Parts after a Crash 76

Airbag System
Airbag System 77
Where Are the Airbags? 78
When Should an Airbag Inflate? 80
What Makes an Airbag Inflate? ... 81
How Does an Airbag Restrain? ... 81
What Will You See after an Airbag Inflates? 81
Passenger Sensing System 83
Servicing the Airbag-Equipped Vehicle 87
Adding Equipment to the Airbag-Equipped Vehicle 87
Airbag System Check 88
Replacing Airbag System Parts after a Crash 88

Child Restraints
Older Children 89
Infants and Young Children 90
Child Restraint Systems 93
Where to Put the Restraint 94
Lower Anchors and Tethers for Children (LATCH System) 95
Replacing LATCH System Parts After a Crash 101
Securing Child Restraints (With the Safety Belt in the Rear Seat) 101
Securing Child Restraints (With the Safety Belt in the Front Seat) 104

Head Restraints

Object-ID=4447612 Owner=Landstrom, Michael
LMD=08-Mar-2016 LMB=Landstrom, Michael

If equipped with base seats, the vehicle's front seats have adjustable head restraints in the outboard seating positions.

If equipped with high performance seats, the vehicle's front seats have head restraints in the outboard seating positions that cannot be adjusted.

⚠ Warning

Object-ID=2209551 LMD=13-Nov-2008

With head restraints that are not installed and adjusted properly, there is a greater chance that occupants will suffer a neck/spinal injury in a crash. Do not drive until the head restraints for all occupants are installed and adjusted properly.

1968498

If equipped with base seats, adjust the head restraint so that the top of the restraint is at the same height as the top of the occupant's head. This position reduces the chance of a neck injury in a crash.

Front Seats

If equipped, the vehicle's front seats have adjustable head restraints in the outboard seating positions.

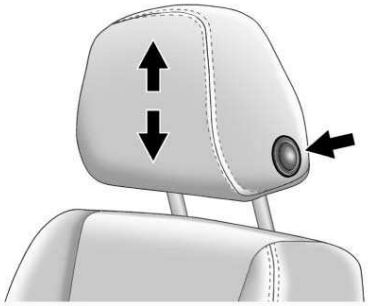

1881871

The height of the head restraint can be adjusted.

To raise or lower the head restraint, press the button located on the side of the head restraint, and pull up or push the head restraint down and release the button. Pull and push on the head restraint after the button is released to make sure that it is locked in place.

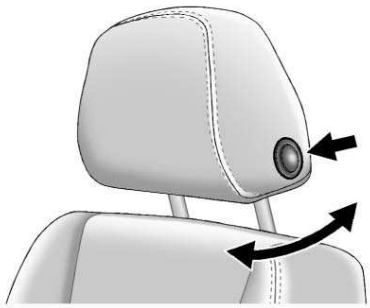

2768788

To adjust the head restraint forward and rearward, press the button located on the side facing of the head restraint and move it forward or rearward until the desired locking position is reached. Try to move the head restraint after the button is released to make sure that it is locked in place.

The front seat outboard head restraints are not removable.

Rear Seats

The vehicle's rear seats have adjustable head restraints in the outboard seating positions.

The height of the head restraint can be adjusted. Pull the head restraint up to raise it. Try to move the head restraint to make sure that it is locked in place.

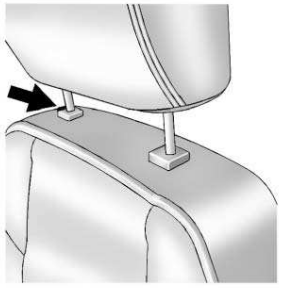

2403763

To lower the head restraint, press the button, located on the top of the seatback, and push the head restraint down. Try to move the head restraint after the button is released to make sure that it is locked in place.

Rear outboard head restraints are not removable.

Front Seats

Power Seat Adjustment

Object-ID=4023371 Owner=Landstrom, Michael
LMD=26-Apr-2016 LMB=Landstrom, Michael

High Performance Seat Shown, Others Similar

4056626

To adjust the seat:

- Move the seat forward or rearward by sliding the control forward or rearward.
- Raise or lower the seat by moving the rear of the control up or down.

- If equipped, raise or lower the front part of the seat cushion by moving the front of the control up or down.

To adjust the seatback, see *Reclining Seatbacks* ⇨ *62*.

To adjust the lumbar support, see *Lumbar Adjustment* ⇨ *61*.

Some vehicles are equipped with a Safety Alert Seat. This feature activates a vibrating pulse alert in the driver seat to help the driver avoid crashes.

High Performance Seat Adjustment

⚠ Warning

Object-ID=2208270 LMD=23-Nov-2011

You can lose control of the vehicle if you try to adjust a driver seat while the vehicle is moving. Adjust the driver seat only when the vehicle is not moving.

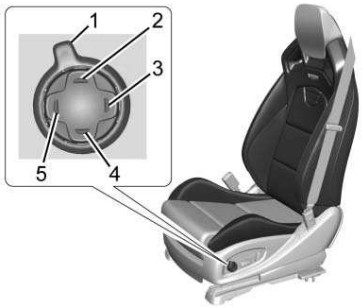

High Performance Seat

4017583

1. Feature Select
2. Up
3. Rearward
4. Down
5. Forward

- Move Feature Select (1) to display seat adjustments on the center stack. Press and release or hold to scroll through features.
- Press Up (2) to make upward adjustments of the selected feature.
- Press Rearward (3) to make rearward adjustments of the selected feature.
- Press Down (4) to make downward adjustments of the selected feature.
- Press Forward (5) to make forward adjustments of the selected feature.

Four-Way Lumbar Support

To adjust lumbar support for a base seat, see *Lumbar Adjustment* ⇨ *61*.

To adjust lumbar support for high performance seats, if equipped:

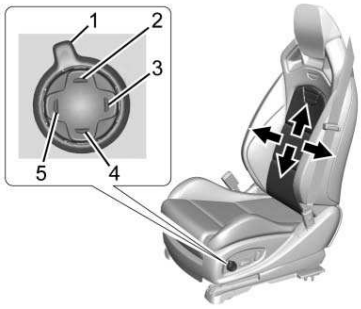

High Performance Seat

4017584

- Press and release or hold Feature Select (1) to scroll to lumbar support on the center stack.
- Press Forward (5) or Rearward (3) to adjust lumbar forward or rearward.
- Press Up (2) or Down (4) to adjust lumbar support up or down.

Cushion Bolster

To adjust cushion bolster, if equipped:

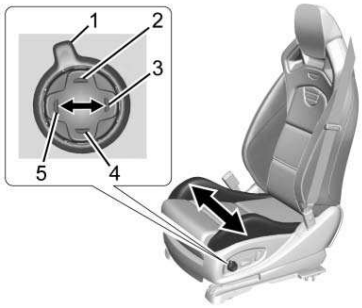

4021145

- Press and release or hold Feature Select (1) to scroll to cushion bolster on the center stack.
- Press Forward (5) or Rearward (3) to adjust cushion bolster inward or outward.

Back Bolster

To adjust back bolster, if equipped:

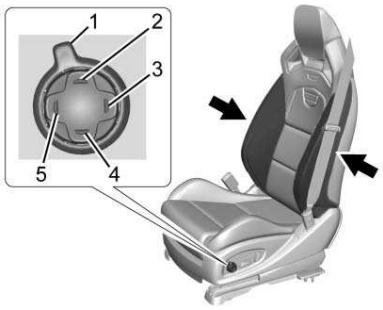

4021147

- Press and release or hold Feature Select (1) to scroll to back bolster on the center stack.
- Press Forward (5) or Rearward (3) to adjust back bolster inward or outward.

Lumbar Adjustment

Object-ID=3319639 Owner=Landstrom, Michael LMD=31-Mar-2016 LMB=Landstrom, Michael

Two-Way Lumbar and Bolster Adjustment

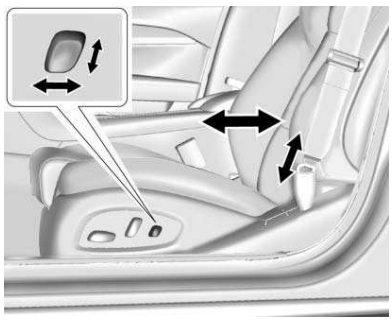

Lumbar Adjustment

2675338

To adjust the two-way lumbar and bolster support, if equipped:

- Press and hold the lumbar adjustment control forward or rearward to adjust lumbar support inward or outward.

- Press and hold the recliner control up or down to increase or decrease seatback bolster support.

Four-Way Lumbar and Bolster Adjustment

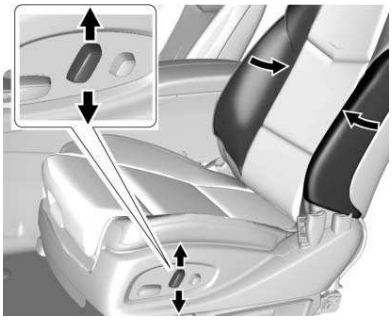

Bolster Adjustment

3319514

To adjust the four-way lumbar and bolster support, if equipped:

- Press and hold the lumbar adjustment control forward or rearward to adjust lumbar support inward or outward and up or down for vertical lumbar adjustment.
- Press and hold the recliner control up or down to increase or decrease seatback bolster support.

Thigh Support Adjustment

Object-ID=2680592 Owner=Landstrom, Michael LMD=08-Oct-2015 LMB=Landstrom, Michael

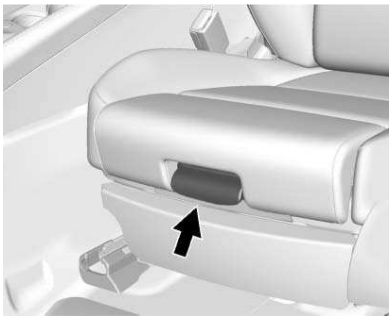

Base Seat

2675333

If equipped, pull up on the lever. Then pull or push on the support to lengthen or shorten. Release the lever to lock in place.

Reclining Seatbacks

Object-ID=2680593 Owner=Landstrom, Michael LMD=31-Mar-2016 LMB=Landstrom, Michael

⚠ Warning

Object-ID=2208274 LMD=08-Dec-2015

Sitting in a reclined position when the vehicle is in motion can be dangerous. Even when buckled up, the safety belts cannot do their job.

The shoulder belt will not be against your body. Instead, it will be in front of you. In a crash, you could go into it, receiving neck or other injuries.

The lap belt could go up over your abdomen. The belt forces would be there, not at your pelvic bones. This could cause serious internal injuries.

For proper protection when the vehicle is in motion, have the seatback upright. Then sit well back in the seat and wear the safety belt properly.

1968936

Do not have a seatback reclined if the vehicle is moving.

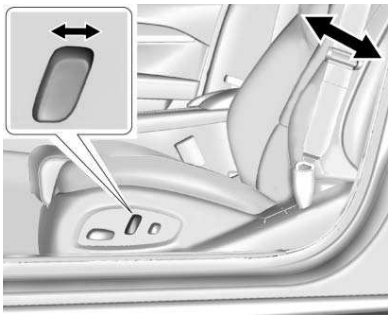

Base Seat

2675340

To adjust the seatback:

- Tilt the top of the control rearward to recline.
- Tilt the top of the control forward to raise.

High Performance Seat

4056523

To adjust the seatback:

- Tilt the top of the control rearward to recline.
- Tilt the top of the control forward to raise.

Memory Seats

Object-ID=4111131 Owner=Landstrom, Michael LMD=31-Mar-2016 LMB=Landstrom, Michael

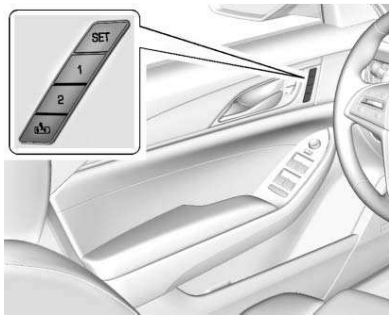

2901329

The SET, 1, 2, and (Exit) buttons on the driver door are used to manually store and recall memory settings for the driver seat, outside mirrors, power tilt and telescoping steering column (if equipped).

Storing Memory Positions

To store positions to the 1 and 2 buttons:

1. The ignition must be in ON/RUN/START or ACC/ACCESSORY.

2. Adjust the driver seat, outside mirrors, and the power tilt and telescoping steering column (if equipped) to the desired positions.
3. Press and release SET. A beep will sound.
4. Immediately press and hold 1 until two beeps sound.
5. Repeat Steps 1 and 2 for a second driver using 2.

Repeat Steps 1–4 using to store your positions for getting out of the vehicle.

Manually Recalling Memory Positions

Press and hold 1, 2, or to manually recall the previously stored memory positions. Releasing 1, 2, or before the stored positions are reached stops the recall.

Automatically Recalling Memory Positions

If programmed in vehicle personalization, the Auto (Automatic) Memory Recall feature automatically recalls the current driver's previously stored 1 or 2 position when the ignition is changed from off to ON/RUN/START or ACC/ACCESSORY.

The transmission must be in P (Park).

See *Vehicle Personalization* ➪ *158*.

To stop recall movement, press one of the memory, driver seat, outside mirror, or power tilt and telescoping steering column controls.

RKE transmitters are not labeled with a number. If your memory seat position is stored to 1 or 2 but this position is not automatically recalling, then store your positions to the other button or switch RKE transmitters with the other driver.

If the vehicle's driver has changed, in some vehicles the Driver ID may be displayed for the first few ignition cycles.

Easy Exit Recall

If programmed on in the vehicle personalization menu, the Easy Exit feature recalls the previously stored (Exit) positions when leaving the vehicle. See "Storing Memory Positions" listed previously. See also *Vehicle Personalization* ➪ *158*.

Easy Exit Recall automatically activates when one of the following occurs:

- The vehicle is turned off and the driver door is opened within a short time.
- The vehicle is turned off with the driver door open.

Obstructions

If something has blocked the driver seat and/or the power tilt and telescoping steering column while recalling a memory position, the recall may stop. Remove the obstruction. Then do one of the following:

- If automatically or manually recalling the stored memory position, press and hold the appropriate manual control for two seconds. Try recalling again by pressing the appropriate memory button, then try recalling again by opening the driver door and pressing on the RKE transmitter.

- If recalling the exit position, press and hold the appropriate manual control for the exit feature not recalling for two seconds. Then try recalling the exit position again.

If the memory position is still not recalling, see your dealer for service.

Heated and Ventilated Front Seats

Object-ID=4327985 Owner=Landstrom, Michael LMD=02-Dec-2015 LMB=Landstrom, Michael

⚠ Warning

Object-ID=2769687 LMD=08-Feb-2012

If you cannot feel temperature change or pain to the skin, the seat heater may cause burns. To reduce the risk of burns, people with such a condition should use care when using the seat heater, especially for long periods of time. Do not place anything on the seat that insulates against heat, such as a blanket, cushion, cover, or similar item. This may cause the seat heater to

(Continued)

Warning (Continued)

Object-ID=2769687 LMD=08-Feb-2012

overheat. An overheated seat heater may cause a burn or may damage the seat.

4326236

If equipped, the buttons are near the climate controls on the center stack. To operate, the ignition must be on.

Press or to heat the driver or passenger seat cushion and seatback.

Press or to ventilate the driver or passenger seat.

Press the button once for the highest setting. With each press of the button, the seat will change to the next lower setting, and then to the off setting. The indicator lights next to the buttons indicate three for the highest setting and one for the lowest. If the front heated seats are on high, the level may automatically be lowered after approximately 30 minutes.

When this feature is off, the heated and ventilated seat symbols on the buttons are white. A ventilated seat has a fan that pulls or pushes air through the seat. The air is not cooled. When a heated seat is turned on, the symbol turns red. When a ventilated seat is turned on, the symbol turns blue.

The passenger seat may take longer to heat up.

Auto Heated and Ventilated Seats

When the vehicle is on, this feature will automatically activate the heated or ventilated seats at the level required by the vehicle's interior temperature.

The active high, medium, low, or off heated or ventilated seat level will be indicated by the manual heated or ventilated seat buttons on the center stack. Use the manual heated or ventilated seat buttons on the center stack to turn auto heated or ventilated seats off. If the passenger seat is unoccupied, the auto heated or ventilated seats feature will not activate that seat. The auto heated or ventilated seats feature can be programmed to always be enabled when the vehicle is on.

See *Vehicle Personalization* ⇨ *158*.

Remote Start Heated and Ventilated Seats

During a remote start, the heated or ventilated seats, if equipped, can be turned on automatically. When it is cold outside, the heated seats turn on, and when it is hot outside the ventilated seats turn on. The heated or ventilated seats are canceled when the ignition is turned on. Press the heated or ventilated seat button to use the heated or ventilated seats after the vehicle is started.

The heated or ventilated seat indicator lights do not turn on during a remote start.

The temperature performance of an unoccupied seat may be reduced. This is normal.

The heated or ventilated seats may be enabled or disabled in the vehicle personalization menu. See *Remote Vehicle Start* ⇨ *38* and *Vehicle Personalization* ⇨ *158*.

Rear Seats

Object-ID=3340510 Owner=Landstrom, Michael LMD=31-Mar-2016 LMB=Landstrom, Michael

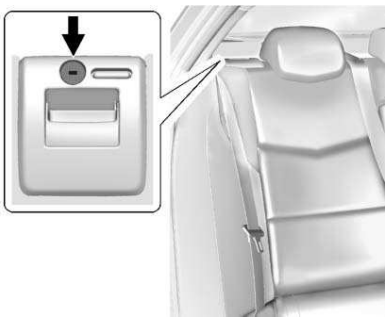

3340318

Split fold seats are equipped with a locking latch.

Lock and unlock the seatback using the vehicle key in the cylinder.

The latch will not open when the seatback is locked.

Folding the Seatback

Caution

Object-ID=2811111 LMD=26-Mar-2012

Folding a rear seat with the safety belts still fastened may cause damage to the seat or the safety belts. Always unbuckle the safety belts and return them to their normal stowed position before folding a rear seat.

If equipped, either side of the seatback can be folded for more cargo space. Fold a seatback only when the vehicle is not moving.

To fold the seatback:

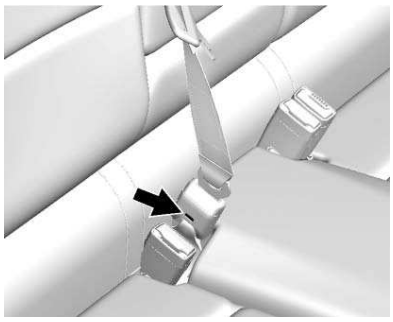

2717516

1. Disconnect the rear safety belt mini-latch using a key in the slot on the mini-buckle, and let the belt retract.

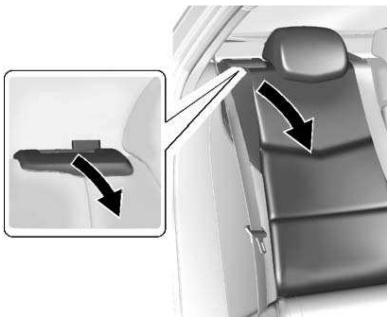

2711532

2. Unlock the seatback using the vehicle key in the cylinder.

   Pull the lever on top of the seatback toward you to release the seatback.

   A red tab near the seatback lever raises when the seatback is released.

3. Fold the seatback forward.

   Repeat Steps 2 and 3 to fold the other seatback, if desired.

Raising the Seatback

⚠ Warning

Object-ID=2208277 LMD=11-Nov-2008

If either seatback is not locked, it could move forward in a sudden stop or crash. That could cause injury to the person sitting there. Always push and pull on the seatbacks to be sure they are locked.

⚠ Warning

Object-ID=2211711 LMD=20-Nov-2008

A safety belt that is improperly routed, not properly attached, or twisted will not provide the protection needed in a crash. The person wearing the belt could be seriously injured. After raising the rear seatback, always check to be sure that the safety belts are properly routed and attached, and are not twisted.

To raise a seatback:

1. Lift the seatback up. Make sure the center safety belt and latch do not get trapped behind the seat. Push the seatback rearward to secure it in place.

   A red tab near the seatback lever retracts when the seatback is in place.
2. Push and pull the top of the seatback to be sure it is in position.
3. Lock the seatback using the vehicle key in the cylinder.
4. Reconnect the center safety belt mini-latch to the mini-buckle. Do not let the belt twist.
5. Pull on the center safety belt to make sure the mini-latch is secure.
6. Repeat the steps to raise the other seatback, if necessary.

When the seat is not in use, it should be kept in the upright, locked position.

Heated Rear Seats

Object-ID=2900627 Owner=Landstrom, Michael LMD=08-Oct-2015 LMB=Landstrom, Michael

⚠ Warning

Object-ID=2771866 LMD=14-Feb-2012

If you cannot feel temperature change or pain to the skin, the seat heater may cause burns. See the Warning under *Heated and Ventilated Front Seats* ⇨ *65*.

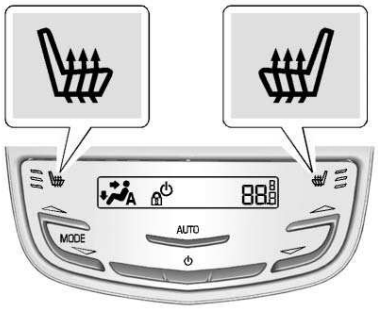

3255496

If equipped, the buttons are on the rear of the center console.

With the ignition in ON/RUN/START, press or to heat the left or right outboard seat cushion and seatback. An indicator on the climate control display appears when this feature is on.

Press the button once for the highest setting. With each press of the button, the heated seat changes to the next lower setting, and then the off setting. Three lights indicate the highest setting, and one light indicates the lowest. If the heated seats are on high, the level may automatically be lowered after approximately 30 minutes.

Rear Seat Pass-Through Door

Object-ID=2900814 Owner=Landstrom, Michael LMD=11-Apr-2016 LMB=Landstrom, Michael

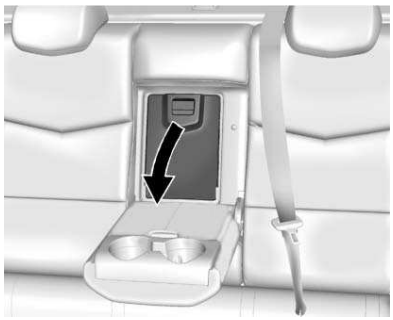

2717270

The vehicle has a rear seat pass-through door in the center of the rear seatback. Fold down the center armrest and pull the lever all the way down to release the door.

The pass-through door can be locked or unlocked using the knob on the back of the door. Open the trunk to access the lock. Turn the knob toward to lock the door or away from to unlock the door.

Safety Belts

Object-ID=2507749 Owner=Foster, Cindi LMD=26-Jan-2016 LMB=Clark, Lorien

This section of the manual describes how to use safety belts properly. It also describes some things not to do with safety belts.

Warning

Object-ID=2507477 LMD=03-Sep-2013

Do not let anyone ride where a safety belt cannot be worn properly. In a crash, if you or your passenger(s) are not wearing safety belts, injuries can be much worse than if you are wearing safety belts. You can be seriously injured or killed by hitting things inside the vehicle harder or by being ejected from the vehicle. In addition, anyone who is not buckled up can strike other passengers in the vehicle.

It is extremely dangerous to ride in a cargo area, inside or outside of a vehicle. In a collision, passengers

(Continued)

Warning (Continued)

Object-ID=2507477 LMD=03-Sep-2013

riding in these areas are more likely to be seriously injured or killed. Do not allow passengers to ride in any area of the vehicle that is not equipped with seats and safety belts.

Always wear a safety belt, and check that all passenger(s) are restrained properly too.

This vehicle has indicators as a reminder to buckle the safety belts. See *Safety Belt Reminders* ⇨ *129*.

Why Safety Belts Work

1966609

When riding in a vehicle, you travel as fast as the vehicle does. If the vehicle stops suddenly, you keep going until something stops you. It could be the windshield, the instrument panel, or the safety belts!

When you wear a safety belt, you and the vehicle slow down together. There is more time to stop because you stop over a longer distance and, when worn properly, your strongest bones take the forces from the safety belts. That is why wearing safety belts makes such good sense.

Questions and Answers About Safety Belts

Q: Will I be trapped in the vehicle after a crash if I am wearing a safety belt?

A: You *could* be — whether you are wearing a safety belt or not. Your chance of being conscious during and after a crash, so you *can* unbuckle and get out, is *much* greater if you are belted.

Q: If my vehicle has airbags, why should I have to wear safety belts?

A: Airbags are supplemental systems only; so they work *with* safety belts — not instead of them. Whether or not an airbag is provided, all occupants still have to buckle up to get the most protection.

Also, in nearly all states and in all Canadian provinces, the law requires wearing safety belts.

How to Wear Safety Belts Properly

Object-ID=2510095 Owner=Foster, Cindi LMD=26-Jan-2016 LMB=Clark, Lorien

This section is only for people of adult size.

There are special things to know about safety belts and children, and there are different rules for smaller children and infants. If a child will be riding in the vehicle, see *Older Children* ⇨ *89* or *Infants and Young Children* ⇨ *90*. Follow those rules for everyone's protection.

It is very important for all occupants to buckle up. Statistics show that unbelted people are hurt more often in crashes than those who are wearing safety belts.

There are important things to know about wearing a safety belt properly.

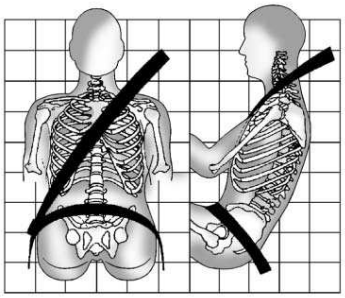

1966371

- Sit up straight and always keep your feet on the floor in front of you.
- Always use the correct buckle for your seating position.
- Wear the lap part of the belt low and snug on the hips, just touching the thighs. In a crash, this applies force to the strong pelvic bones and you would be less likely to slide under the lap belt. If you slid under it, the belt would apply force on your abdomen. This could cause serious or even fatal injuries.
- Wear the shoulder belt over the shoulder and across the chest. These parts of the body are best able to take belt restraining forces. The shoulder belt locks if there is a sudden stop or crash.

⚠ Warning

Object-ID=2510048 LMD=03-Sep-2013

You can be seriously injured, or even killed, by not wearing your safety belt properly.

- Never allow the lap or shoulder belt to become loose or twisted.
- Never wear the shoulder belt under both arms or behind your back.
- Never route the lap or shoulder belt over an armrest.

Lap-Shoulder Belt

Object-ID=3956968 Owner=Foster, Cindi LMD=26-Jan-2016 LMB=Clark, Lorien

All seating positions in the vehicle have a lap-shoulder belt.

If you are using a rear seating position with a detachable safety belt and the safety belt is not attached, see *Rear Seats* ⇨ *66* for instructions on reconnecting the safety belt to the mini-buckle.

The following instructions explain how to wear a lap-shoulder belt properly.

1. Adjust the seat, if the seat is adjustable, so you can sit up straight. To see how, see "Seats" in the Index.

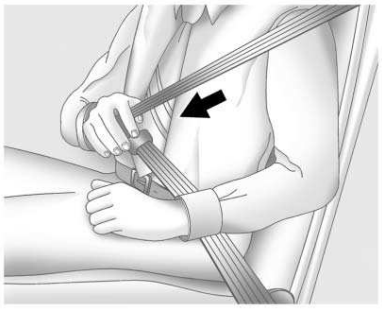

1877328

2. Pick up the latch plate and pull the belt across you. Do not let it get twisted.

   The lap-shoulder belt may lock if you pull the belt across you very quickly. If this happens, let the belt go back slightly to unlock it. Then pull the belt across you more slowly.

   If the shoulder portion of a passenger belt is pulled out all the way, the child restraint locking feature may be engaged. If this happens, let the belt go back all the way and start again.

1966395

   If the webbing locks in the latch plate before it reaches the buckle, tilt the latch plate flat to unlock.

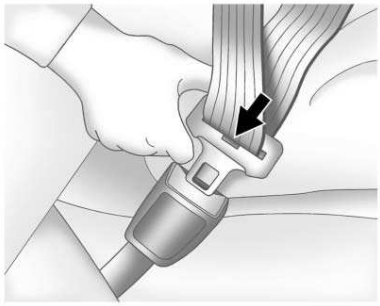

1877330

3. Push the latch plate into the buckle until it clicks.

   Pull up on the latch plate to make sure it is secure. If the belt is not long enough, see *Safety Belt Extender* ⇨ *75*.

   Position the release button on the buckle so that the safety belt could be quickly unbuckled if necessary.

4. If equipped with a shoulder belt height adjuster, move it to the height that is right for you. See "Shoulder Belt Height Adjuster" later in this section for instructions on use and important safety information.

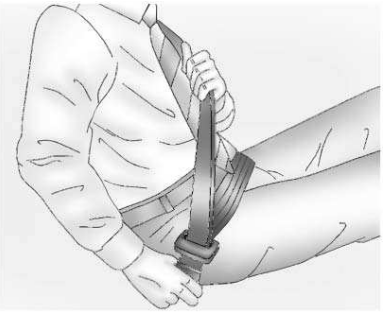

1966390

5. To make the lap part tight, pull up on the shoulder belt.

1877333

To unlatch the belt, push the button on the buckle. The belt should return to its stowed position.

Always stow the safety belt slowly. If the safety belt webbing returns quickly to the stowed position, the retractor may lock and cannot be pulled out. If this happens, pull the safety belt straight out firmly to unlock the webbing, and then release it. If the webbing is still locked in the retractor, see your dealer.

Before a door is closed, be sure the safety belt is out of the way. If a door is slammed against a safety belt, damage can occur to both the safety belt and the vehicle.

Shoulder Belt Height Adjuster

The vehicle has a shoulder belt height adjuster for the driver and right front passenger seating positions.

Adjust the height so the shoulder portion of the belt is on the shoulder and not falling off of it. The belt should be close to, but not contacting, the neck. Improper shoulder belt height adjustment could reduce the effectiveness of the safety belt in a crash. See *How to Wear Safety Belts Properly* ⇨ *71*.

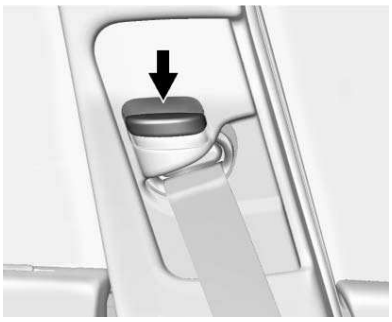

2920266

Press the release button and move the height adjuster to the desired position. The adjuster can be moved up by pushing the slide/trim up. After the adjuster is set to the desired position, try to move it down without pushing the release button to make sure it has locked into position.

Automatic Safety Belt Tightening System

The vehicle may have the Automatic Safety Belt Tightening System.

Each time the vehicle is started with the front safety belts buckled, the system activates once to tighten the safety belts when the forward vehicle speed exceeds the threshold for activation.

The system also activates during emergency braking and/or sudden driving maneuvers and releases when driving conditions return to normal.

The system turns off whenever Competitive Driving Mode is activated, and will turn back on when Competitive Driving Mode is deactivated. See *Competitive Driving Mode* ⇨ *235*.

The system will not activate if the Traction Control/Electronic Stability Control system is not functioning properly. See *Traction Control/ Electronic Stability Control* ⇨ *230*.
If there is a problem with the Automatic Safety Belt Tightening System, a message displays on the Driver Information Center (DIC). See *Safety Belt Messages* ⇨ *156*. Other safety belt functions are not affected by the Automatic Safety Belt Tightening System.

Safety Belt Pretensioners

This vehicle has safety belt pretensioners for front outboard occupants. Although the safety belt pretensioners cannot be seen, they are part of the safety belt assembly. They can help tighten the safety belts during the early stages of a moderate to severe frontal, near frontal, or rear crash if the threshold conditions for pretensioner activation are met. Safety belt pretensioners can also help tighten the safety belts in a side crash or a rollover event.

Pretensioners work only once. If the pretensioners activate in a crash, the pretensioners and probably other parts of the vehicle's safety belt system will need to be replaced. See *Replacing Safety Belt System Parts after a Crash* ⇨ *76*.

Do not sit on the outboard safety belt while entering or exiting the vehicle or at any time while sitting in the seat. Sitting on the safety belt can damage the webbing and hardware.

Rear Safety Belt Comfort Guides

Rear safety belt comfort guides may provide added safety belt comfort for older children who have outgrown booster seats and for some adults. When installed on a shoulder belt, the comfort guide positions the belt away from the neck and head.

Comfort guides are available through your dealer for the rear outboard seating positions. Instructions are included with the guide.

Safety Belt Use During Pregnancy

Object-ID=2153268 Owner=Foster, Cindi
LMD=26-Jan-2016 LMB=Clark, Lorien

Safety belts work for everyone, including pregnant women. Like all occupants, they are more likely to be seriously injured if they do not wear safety belts.

1966380

A pregnant woman should wear a lap-shoulder belt, and the lap portion should be worn as low as possible, below the rounding, throughout the pregnancy.

The best way to protect the fetus is to protect the mother. When a safety belt is worn properly, it is more likely that the fetus will not be hurt in a crash. For pregnant women, as for anyone, the key to making safety belts effective is wearing them properly.

Safety Belt Extender

Object-ID=2153288 Owner=Foster, Cindi
LMD=26-Jan-2016 LMB=Clark, Lorien

If the vehicle's safety belt will fasten around you, you should use it.

But if a safety belt is not long enough, your dealer will order you an extender. When you go in to order it, take the heaviest coat you will wear, so the extender will be long enough for you. To help avoid personal injury, do not let someone else use it, and use it only for the seat it is made to fit. The extender has been designed for adults. Never use it for securing child restraints. To wear it, attach it to the regular safety belt. For more information, see the instruction sheet that comes with the extender.

Safety System Check

Object-ID=4363642 Owner=Foster, Cindi
LMD=26-Jan-2016 LMB=Clark, Lorien

Check that the safety belt reminder, safety belts, buckles, latch plates, and retractors, are all working properly. Look for any other loose or damaged safety belt system parts that might keep a safety belt system from

performing properly. See your dealer to have it repaired. Torn or frayed safety belts may not protect you in a crash. They can rip apart under impact forces. If a belt is torn or frayed, have it replaced immediately.

Make sure the safety belt reminder light is working. See *Safety Belt Reminders* ⇨ *129*.

Keep safety belts clean and dry. See *Safety Belt Care* ⇨ *76*.

Safety Belt Care

Object-ID=2153293 Owner=Foster, Cindi
LMD=26-Jan-2016 LMB=Clark, Lorien

Keep belts clean and dry.

⚠ Warning

Object-ID=2208127 LMD=13-Oct-2015

Do not bleach or dye safety belt webbing. It may severely weaken the webbing. In a crash, they might not be able to provide adequate protection. Clean and rinse safety belt webbing only with mild soap and lukewarm water. Allow the webbing to dry.

Safety belts should be properly cared for and maintained.

Safety belt hardware should be kept dry and free of dust or debris. As necessary exterior hard surfaces and safety belt webbing may be lightly cleaned with mild soap and water. Ensure there is not excessive dust or debris in the mechanism. If dust or debris exists in the system please see the dealer. Parts may need to be replaced to ensure proper functionality of the system.

Replacing Safety Belt System Parts after a Crash

Object-ID=2153294 Owner=Foster, Cindi
LMD=26-Jan-2016 LMB=Clark, Lorien

⚠ Warning

Object-ID=2209624 LMD=03-Sep-2013

A crash can damage the safety belt system in the vehicle. A damaged safety belt system may not properly protect the person using it, resulting in serious injury or even death in a crash. To help make sure

(Continued)

Warning (Continued)

Object-ID=2209624 LMD=03-Sep-2013

the safety belt systems are working properly after a crash, have them inspected and any necessary replacements made as soon as possible.

After a minor crash, replacement of safety belts may not be necessary. But the safety belt assemblies that were used during any crash may have been stressed or damaged. See your dealer to have the safety belt assemblies inspected or replaced.

New parts and repairs may be necessary even if the safety belt system was not being used at the time of the crash.

Have the safety belt pretensioners checked if the vehicle has been in a crash, or if the airbag readiness light stays on after you start the vehicle or while you are driving. See *Airbag Readiness Light* ⇨ *129*.

Airbag System

Object-ID=2911380 Owner=Foster, Cindi LMD=26-Jan-2016 LMB=Clark, Lorien

The vehicle has the following airbags:

- A frontal airbag for the driver.
- A frontal airbag for the front outboard passenger.
- A knee airbag for the driver.
- A knee airbag for the front outboard passenger.
- A seat-mounted side impact airbag for the driver.
- A seat-mounted side impact airbag for the front outboard passenger.
- Seat-mounted side impact airbags for the second row outboard passengers.
- A roof-rail airbag for the driver and the passenger seated directly behind the driver.
- A roof-rail airbag for the front outboard passenger and the passenger seated directly behind the front outboard passenger.

All vehicle airbags have the word AIRBAG on the trim or on a label near the deployment opening.

For frontal airbags, the word AIRBAG is on the center of the steering wheel for the driver and on the instrument panel for the front outboard passenger.

For knee airbags, the word AIRBAG is on the lower part of the instrument panel.

For seat-mounted side impact airbags, the word AIRBAG is on the side of the seatback closest to the door.

For roof-rail airbags, the word AIRBAG is on the ceiling or trim.

Airbags are designed to supplement the protection provided by safety belts. Even though today's airbags are also designed to help reduce the risk of injury from the force of an inflating bag, all airbags must inflate very quickly to do their job.

Here are the most important things to know about the airbag system:

⚠ Warning

Object-ID=2210167 LMD=10-Dec-2015

You can be severely injured or killed in a crash if you are not wearing your safety belt, even with airbags. Airbags are designed to work with safety belts, not replace them. Also, airbags are not designed to inflate in every crash. In some crashes safety belts are the only restraint. See *When Should an Airbag Inflate?* ⇨ *80*.

Wearing your safety belt during a crash helps reduce your chance of hitting things inside the vehicle or being ejected from it. Airbags are “supplemental restraints” to the safety belts. Everyone in the vehicle should wear a safety belt properly, whether or not there is an airbag for that person.

⚠ Warning

Object-ID=2210478 LMD=16-Jan-2015

Because airbags inflate with great force and faster than the blink of an eye, anyone who is up against, or very close to any airbag when it inflates can be seriously injured or killed. Do not sit unnecessarily close to any airbag, as you would be if sitting on the edge of the seat or leaning forward. Safety belts help keep you in position before and during a crash. Always wear a safety belt, even with airbags. The driver should sit as far back as possible while still maintaining control of the vehicle. The safety belts and the front outboard passenger airbags are most effective when you are sitting well back and upright in the seat with both feet on the floor.

Occupants should not lean on or sleep against the door or side windows in seating positions with seat-mounted side impact airbags and/or roof-rail airbags.

⚠ Warning

Object-ID=2908148 LMD=29-Jul-2013

Children who are up against, or very close to, any airbag when it inflates can be seriously injured or killed. Always secure children properly in the vehicle. To read how, see *Older Children* ⇨ *89* or *Infants and Young Children* ⇨ *90*.

1971498

There is an airbag readiness light on the instrument cluster, which shows the airbag symbol. The system checks the airbag electrical system for malfunctions. The light tells you if there is an electrical problem. See *Airbag Readiness Light* ⇨ *129* for more information.

Where Are the Airbags?

Object-ID=3213954 Owner=Foster, Cindi
LMD=26-Jan-2016 LMB=Clark, Lorien

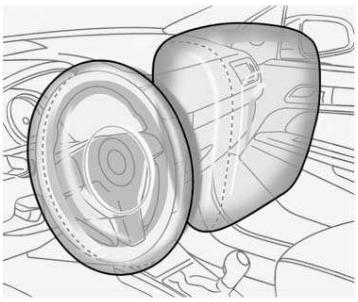

1877319

The driver frontal airbag is in the center of the steering wheel.

The front outboard passenger frontal airbag is in the passenger side instrument panel.

2716161

The driver knee airbag is below the steering column. The front outboard passenger knee airbag is below the glove box.

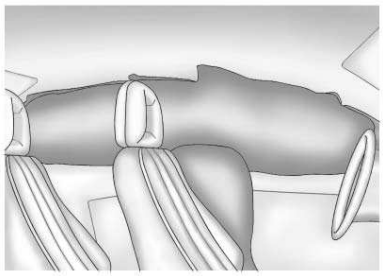

Driver Side Shown, Passenger Side Similar

2592691

The seat-mounted side impact airbags for the driver and front outboard passenger are in the side of the seatbacks closest to the door.

The roof-rail airbags for the driver, front outboard passenger, and second row outboard passengers are in the ceiling above the side windows.

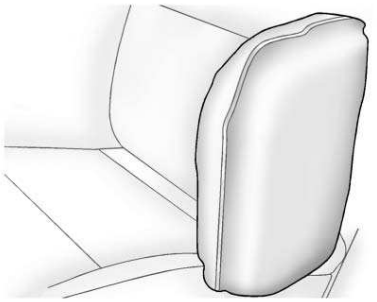

Rear Seat Driver Side Shown, Passenger Side Similar

2184700

The second row seat-mounted side impact airbags are in the sides of the rear seatback closest to the door.

⚠ Warning

Object-ID=2210479 LMD=03-Sep-2013

If something is between an occupant and an airbag, the airbag might not inflate properly or it might force the object into that person causing severe injury or even death. The path of an inflating

(Continued)

Warning (Continued)

Object-ID=2210479 LMD=03-Sep-2013

airbag must be kept clear. Do not put anything between an occupant and an airbag, and do not attach or put anything on the steering wheel hub or on or near any other airbag covering.

Do not use seat accessories that block the inflation path of a seat-mounted side impact airbag.

Never secure anything to the roof of a vehicle with roof-rail airbags by routing a rope or tie-down through any door or window opening. If you do, the path of an inflating roof-rail airbag will be blocked.

When Should an Airbag Inflate?

Object-ID=3318536 Owner=Foster, Cindi LMD=26-Jan-2016 LMB=Clark, Lorien

This vehicle is equipped with airbags. See *Airbag System* ⇨ *77*. Airbags are designed to inflate if the impact exceeds the specific airbag system's deployment threshold. Deployment thresholds are used to predict how severe a crash is likely to be in time for the airbags to inflate and help restrain the occupants. The vehicle has electronic sensors that help the airbag system determine the severity of the impact. Deployment thresholds can vary with specific vehicle design.

Frontal airbags are designed to inflate in moderate to severe frontal or near frontal crashes to help reduce the potential for severe injuries, mainly to the driver's or front outboard passenger's head and chest.

Whether the frontal airbags will or should inflate is not based primarily on how fast the vehicle is traveling. It depends on what is hit, the direction of the impact, and how quickly the vehicle slows down.

Frontal airbags may inflate at different crash speeds depending on whether the vehicle hits an object straight on or at an angle, and whether the object is fixed or moving, rigid or deformable, narrow or wide.

Frontal airbags are not intended to inflate during vehicle rollovers, in rear impacts, or in many side impacts.

In addition, the vehicle has advanced technology frontal airbags. Advanced technology frontal airbags adjust the restraint according to crash severity.

Knee airbags are designed to inflate in moderate to severe frontal or near frontal impacts. Knee airbags are not designed to inflate during vehicle rollovers, in rear impacts, or in many side impacts.

The vehicle also has a seat position sensor that enables the sensing system to monitor the position of the front outboard passenger seat. The passenger seat position sensor and the passenger safety belt buckle provide information that is used to determine if the passenger knee airbag should inflate.

Seat-mounted side impact airbags are designed to inflate in moderate to severe side crashes depending on the location of the impact. Seat-mounted side impact airbags are not designed to inflate in frontal impacts, near frontal impacts, rollovers, or rear

impacts. A seat-mounted side impact airbag is designed to inflate on the side of the vehicle that is struck.

Roof-rail airbags are designed to inflate in moderate to severe side crashes depending on the location of the impact. In addition, these roof-rail airbags are designed to inflate during a rollover or in a severe frontal impact. Roof-rail airbags are not designed to inflate in rear impacts. Both roof-rail airbags will inflate when either side of the vehicle is struck, if the sensing system predicts that the vehicle is about to roll over on its side, or in a severe frontal impact.

In any particular crash, no one can say whether an airbag should have inflated simply because of the vehicle damage or repair costs.

What Makes an Airbag Inflate?

Object-ID=2568322 Owner=Foster, Cindi LMD=26-Jan-2016 LMB=Clark, Lorien

In a deployment event, the sensing system sends an electrical signal triggering a release of gas from the inflator. Gas from the inflator fills the airbag causing the bag to break out of the cover. The inflator, the airbag, and related hardware are all part of the airbag module.

For airbag locations, see *Where Are the Airbags?* ⇨ *78*.

How Does an Airbag Restrain?

Object-ID=2568323 Owner=Foster, Cindi LMD=26-Jan-2016 LMB=Clark, Lorien

In moderate to severe frontal or near frontal collisions, even belted occupants can contact the steering wheel or the instrument panel. In moderate to severe side collisions, even belted occupants can contact the inside of the vehicle.

Airbags supplement the protection provided by safety belts by distributing the force of the impact more evenly over the occupant's body.

Rollover capable roof-rail airbags are designed to help contain the head and chest of occupants in the outboard seating positions in the first and second rows. The rollover capable roof-rail airbags are designed to help reduce the risk of full or partial ejection in rollover events, although no system can prevent all such ejections.

But airbags would not help in many types of collisions, primarily because the occupant's motion is not toward those airbags. See *When Should an Airbag Inflate?* ⇨ *80*.

Airbags should never be regarded as anything more than a supplement to safety belts.

What Will You See after an Airbag Inflates?

Object-ID=3765109 Owner=Foster, Cindi LMD=26-Jan-2016 LMB=Clark, Lorien

After the frontal, knee, and seat-mounted side impact airbags inflate, they quickly deflate, so quickly that some people may not even realize an airbag inflated. Roof-rail airbags may still be at least partially inflated for some time after they inflate. Some components of the airbag module may be hot for several minutes. For location of the airbags, see *Where Are the Airbags?* ⇨ *78*.

The parts of the airbag that come into contact with you may be warm, but not too hot to touch. There may be some smoke and dust coming from the vents in the deflated airbags. Airbag inflation does not prevent the driver from seeing out of the windshield or being able to steer the vehicle, nor does it prevent people from leaving the vehicle.

⚠ Warning

Object-ID=2208291 LMD=03-Sep-2013

When an airbag inflates, there may be dust in the air. This dust could cause breathing problems for people with a history of asthma or other breathing trouble. To avoid this, everyone in the vehicle should get out as soon as it is safe to do so. If you have breathing problems but cannot get out of the vehicle after an airbag inflates, then get fresh air by opening a window or a door. If you experience breathing problems following an airbag deployment, you should seek medical attention.

The vehicle has a feature that may automatically unlock the doors, turn on the interior lamps and hazard warning flashers, and shut off the fuel system after the airbags inflate. The feature may also activate, without airbag inflation, after an event that exceeds a predetermined threshold. You can lock the doors, turn off the interior lamps, and turn off the hazard warning flashers by using the controls for those features.

⚠ Warning

Object-ID=2221497 LMD=03-Sep-2013

A crash severe enough to inflate the airbags may have also damaged important functions in the vehicle, such as the fuel system, brake and steering systems, etc. Even if the vehicle appears to be drivable after a moderate crash, there may be concealed damage that could make it difficult to safely operate the vehicle.

Use caution if you should attempt to restart the engine after a crash has occurred.

In many crashes severe enough to inflate the airbag, windshields are broken by vehicle deformation. Additional windshield breakage may also occur from the front outboard passenger airbag.

- Airbags are designed to inflate only once. After an airbag inflates, you will need some new parts for the airbag system. If you do not get them, the airbag system will not be there to help protect you in another crash. A new system will include airbag modules and possibly other parts. The service manual for the vehicle covers the need to replace other parts.
- The vehicle has a crash sensing and diagnostic module which records information after a crash. See *Vehicle Data Recording and Privacy* ⇨ *399* and *Event Data Recorders* ⇨ *399*.
- Let only qualified technicians work on the airbag systems. Improper service can mean that an airbag system will not work properly. See your dealer for service.

Passenger Sensing System

Object-ID=2911411 Owner=Foster, Cindi
LMD=08-Feb-2016 LMB=Foster, Cindi

The vehicle has a passenger sensing system for the front outboard passenger position. The passenger airbag status indicator will light on the overhead console when the vehicle is started.

United States

2920323

Canada and Mexico

2048776

The words ON and OFF or the symbol for on and off will be visible during the system check. When the system check is complete, either the word ON or OFF, or the symbol for on and off will be visible. See *Passenger Airbag Status Indicator* ⇨ *130*.

The passenger sensing system turns off the front outboard passenger frontal airbag and knee airbag, under certain conditions. No other airbag is affected by the passenger sensing system.

The passenger sensing system works with sensors that are part of the front outboard passenger seat. The sensors are designed to detect the presence of a properly seated occupant and determine if the front outboard passenger frontal airbag and knee airbag should be allowed to inflate or not.

According to accident statistics, children are safer when properly secured in a rear seat in a correct child restraint for their weight and size.

Whenever possible, children aged 12 and under should be secured in a rear seating position.

Never put a rear-facing child seat in the front. This is because the risk to the rear-facing child is so great, if the airbag inflates.

⚠ Warning

Object-ID=2555658 LMD=11-Aug-2015

A child in a rear-facing child restraint can be seriously injured or killed if the passenger frontal airbag inflates. This is because the back of the rear-facing child restraint would be very close to the inflating airbag. A child in a forward-facing child restraint can be seriously injured or killed if the passenger frontal airbag inflates and the passenger seat is in a forward position.

Even if the passenger sensing system has turned off the front outboard passenger airbag(s), no system is fail-safe. No one can guarantee that an airbag will not deploy under some unusual circumstance, even though the airbag(s) are off.

(Continued)

Warning (Continued)

Object-ID=2555658 LMD=11-Aug-2015

Never put a rear-facing child restraint in the front seat, even if the airbag is off. If securing a forward-facing child restraint in the front outboard passenger seat, always move the seat as far back as it will go. It is better to secure child restraints in the rear seat. Consider using another vehicle to transport the child when a rear seat is not available.

The passenger sensing system is designed to turn off the front outboard passenger frontal airbag and knee airbag if:

- The front outboard passenger seat is unoccupied.
- The system determines that an infant is present in a child restraint.
- A front outboard passenger takes his/her weight off of the seat for a period of time.
- There is a critical problem with the airbag system or the passenger sensing system.

When the passenger sensing system has turned off the front outboard passenger frontal airbag and knee airbag, the off indicator will light and stay lit to remind you that the airbags are off. See *Passenger Airbag Status Indicator* ⇨ *130*.

The passenger sensing system is designed to turn on the front outboard passenger frontal airbag and knee airbag anytime the system senses that a person of adult size is sitting properly in the front outboard passenger seat.

When the passenger sensing system has allowed the airbags to be enabled, the on indicator will light and stay lit as a reminder that the airbags are active.

For some children, including children in child restraints, and for very small adults, the passenger sensing system may or may not turn off the front outboard passenger frontal airbag and knee airbag, depending upon the person's seating posture and body build. Everyone in the vehicle who has outgrown child restraints should wear a safety belt properly — whether or not there is an airbag for that person.

⚠ Warning

Object-ID=2210164 LMD=03-Sep-2013

If the airbag readiness light ever comes on and stays on, it means that something may be wrong with the airbag system. To help avoid injury to yourself or others, have the vehicle serviced right away. See *Airbag Readiness Light* ⇨ *129* for more information, including important safety information.

If the On Indicator Is Lit for a Child Restraint

The passenger sensing system is designed to turn off the front outboard passenger frontal airbag and knee airbag if the system determines that an infant is present in a child restraint. If a child restraint has been installed and the on indicator is lit:

1. Turn the vehicle off.

2. Remove the child restraint from the vehicle.
3. Remove any additional items from the seat such as blankets, cushions, seat covers, seat heaters, or seat massagers.
4. Reinstall the child restraint following the directions provided by the child restraint manufacturer and refer to *Securing Child Restraints (With the Safety Belt in the Rear Seat)* ⇨ *101* or *Securing Child Restraints (With the Safety Belt in the Front Seat)* ⇨ *104*.
5. If, after reinstalling the child restraint and restarting the vehicle, the on indicator is still lit, turn the vehicle off. Then slightly recline the vehicle seatback and adjust the seat cushion, if adjustable, to make sure that the vehicle seatback is not pushing the child restraint into the seat cushion.

   Also make sure the child restraint is not trapped under the vehicle head restraint. If this happens, adjust the head restraint. See *Head Restraints* ⇨ *58*.
6. Restart the vehicle.

   The passenger sensing system may or may not turn off the airbags for a child in a child restraint depending upon the child's size. It is better to secure the child restraint in a rear seat. Never put a rear-facing child restraint in the front seat, even if the on indicator is not lit.

If the Off Indicator Is Lit for an Adult-Sized Occupant

2048779

If a person of adult size is sitting in the front outboard passenger seat, but the off indicator is lit, it could be because that person is not sitting properly in the seat. Use the following steps to allow the system to detect that person and enable the front outboard passenger frontal airbag and knee airbag:

1. Turn the vehicle off.
2. Remove any additional material from the seat, such as blankets, cushions, seat covers, seat heaters, or seat massagers. Also, remove laptops, or other electronic devices.
3. Place the seatback in the fully upright position.
4. Have the person sit upright in the seat, centered on the seat cushion, with legs comfortably extended.
5. Restart the vehicle and have the person remain in this position for two to three minutes after the on indicator is lit.

⚠ Warning

Object-ID=2898635 LMD=03-Sep-2013

If the front outboard passenger airbag is turned off for an adult-sized occupant, the airbag will not be able to inflate and help protect that person in a crash, resulting in an increased risk of serious injury or even death. An adult-sized occupant should not ride in the front outboard passenger seat, if the passenger airbag off indicator is lit.

Additional Factors Affecting System Operation

Safety belts help keep the passenger in position on the seat during vehicle maneuvers and braking, which helps the passenger sensing system maintain the passenger airbag status. See “Safety Belts” and “Child Restraints” in the Index for additional information about the importance of proper restraint use.

A thick layer of additional material, such as a blanket or cushion, or aftermarket equipment such as seat covers, seat heaters, and seat massagers can affect how well the passenger sensing system operates. We recommend that you not use seat covers or other aftermarket equipment except when approved by GM for your specific vehicle. See *Adding Equipment to the Airbag-Equipped Vehicle* ⇨ *87* for more information about modifications that can affect how the system operates.

A wet seat can affect the performance of the passenger sensing system. Here is how:

- The passenger sensing system may turn off the passenger frontal airbag and passenger knee airbag when liquid is soaked into the seat. If this happens, the off indicator will be lit, and the airbag readiness light on the instrument panel will also be lit.
- Liquid pooled on the seat that has not soaked in may make it more likely that the passenger sensing system will turn on the passenger frontal airbag and passenger knee airbag while a child restraint or child occupant is on the seat. If the passenger frontal airbag and passenger knee airbag are turned on, the on indicator will be lit.

If the passenger seat gets wet, dry the seat immediately. If the airbag readiness light is lit, do not install a child restraint or allow anyone to occupy the seat. See *Airbag Readiness Light* ⇨ *129* for important safety information.

The on indicator may be lit if an object, such as a briefcase, handbag, grocery bag, laptop, or other electronic device, is put on an unoccupied seat. If this is not desired, remove the object from the seat.

⚠ Warning

Object-ID=2208814 LMD=03-Sep-2013

Stowing of articles under the passenger seat or between the passenger seat cushion and seatback may interfere with the proper operation of the passenger sensing system.

Servicing the Airbag-Equipped Vehicle

Object-ID=2165264 Owner=Foster, Cindi
LMD=26-Jan-2016 LMB=Clark, Lorien

Airbags affect how the vehicle should be serviced. There are parts of the airbag system in several places around the vehicle. Your dealer and the service manual have information about servicing the vehicle and the airbag system. To purchase a service manual, see *Service Publications Ordering Information (US/CAN)* ⇨ *396*.

⚠ Warning

Object-ID=2208295 LMD=03-Sep-2013

For up to 10 seconds after the vehicle is turned off and the battery is disconnected, an airbag can still inflate during improper service. You can be injured if you are close to an airbag when it inflates. Avoid yellow connectors. They are probably part of the airbag system. Be sure to follow proper service

(Continued)

Warning (Continued)

Object-ID=2208295 LMD=03-Sep-2013

procedures, and make sure the person performing work for you is qualified to do so.

Adding Equipment to the Airbag-Equipped Vehicle

Object-ID=4321286 Owner=Foster, Cindi
LMD=26-Jan-2016 LMB=Clark, Lorien

Adding accessories that change the vehicle's frame, bumper system, height, front end, or side sheet metal, may keep the airbag system from working properly. The operation of the airbag system can also be affected by changing any parts of the front seats, safety belts, airbag sensing and diagnostic module, steering wheel, instrument panel, any of the airbag modules, ceiling or pillar garnish trim, overhead console, front sensors, side impact sensors, or airbag wiring.

Your dealer and the service manual have information about the location of the airbag sensors, sensing and diagnostic module, and airbag wiring.

In addition, the vehicle has a passenger sensing system for the front outboard passenger position, which includes sensors that are part of the passenger seat. The passenger sensing system may not operate properly if the original seat trim is replaced with non-GM covers, upholstery, or trim; or with GM covers, upholstery, or trim designed for a different vehicle. Any object, such as an aftermarket seat heater or a comfort-enhancing pad or device, installed under or on top of the seat fabric, could also interfere with the operation of the passenger sensing system. This could either prevent proper deployment of the passenger airbag(s) or prevent the passenger sensing system from properly turning off the passenger airbag(s). See *Passenger Sensing System* ⇨ *83*.

If the vehicle has rollover roof-rail airbags, see *Different Size Tires and Wheels* ⇨ *335* for additional important information.

If you have to modify your vehicle because you have a disability and you have questions about whether the modifications will affect the vehicle's

airbag system, or if you have questions about whether the airbag system will be affected if the vehicle is modified for any other reason, call Customer Assistance. See *Customer Assistance Offices (US/CAN)* ⇨ *386* or *Customer Assistance Offices (MEXICO)* ⇨ *386*.

Airbag System Check

Object-ID=2867378 Owner=Foster, Cindi LMD=26-Jan-2016 LMB=Clark, Lorien

The airbag system does not need regularly scheduled maintenance or replacement. Make sure the airbag readiness light is working. See *Airbag Readiness Light* ⇨ *129*.

Caution

Object-ID=2867375 LMD=29-Jul-2013

If an airbag covering is damaged, opened, or broken, the airbag may not work properly. Do not open or break the airbag coverings. If there are any opened or broken airbag coverings, have the airbag covering and/or airbag module replaced. For

(Continued)

Caution (Continued)

Object-ID=2867375 LMD=29-Jul-2013

the location of the airbags, see *Where Are the Airbags?* ⇨ *78*. See your dealer for service.

Replacing Airbag System Parts after a Crash

Object-ID=2165195 Owner=Foster, Cindi LMD=26-Jan-2016 LMB=Clark, Lorien

⚠ Warning

Object-ID=2209622 LMD=11-Dec-2015

A crash can damage the airbag systems in the vehicle. A damaged airbag system may not properly protect you and your passenger(s) in a crash, resulting in serious injury or even death. To help make sure the airbag systems are working properly after a crash, have them inspected and any necessary replacements made as soon as possible.

If an airbag inflates, you will need to replace airbag system parts. See your dealer for service.

If the airbag readiness light stays on after the vehicle is started or comes on when you are driving, the airbag system may not work properly. Have the vehicle serviced right away. See *Airbag Readiness Light* ⇨ *129*.

Child Restraints

Older Children

Object-ID=2899323 Owner=Foster, Cindi
LMD=26-Jan-2016 LMB=Clark, Lorien

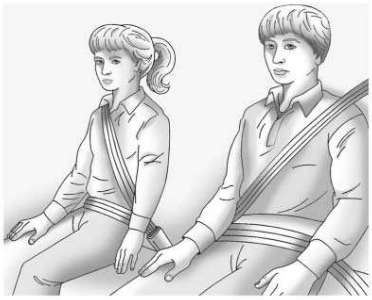

1974657

Older children who have outgrown booster seats should wear the vehicle's safety belts.

The manufacturer instructions that come with the booster seat state the weight and height limitations for that booster. Use a booster seat with a lap-shoulder belt until the child passes the fit test below:

- Sit all the way back on the seat. Do the knees bend at the seat edge? If yes, continue. If no, return to the booster seat.
- Buckle the lap-shoulder belt. Does the shoulder belt rest on the shoulder? If yes, continue. If no, try using the rear safety belt comfort guide, if available. See "Rear Safety Belt Comfort Guides" under *Lap-Shoulder Belt* ⇨ *71*. If a comfort guide is not available, or if the shoulder belt still does not rest on the shoulder, then return to the booster seat.
- Does the lap belt fit low and snug on the hips, touching the thighs? If yes, continue. If no, return to the booster seat.
- Can proper safety belt fit be maintained for the length of the trip? If yes, continue. If no, return to the booster seat.

Q: What is the proper way to wear safety belts?

A: An older child should wear a lap-shoulder belt and get the additional restraint a shoulder belt can provide. The shoulder belt should not cross the face or neck. The lap belt should fit snugly below the hips, just touching the top of the thighs. This applies belt force to the child's pelvic bones in a crash. It should never be worn over the abdomen, which could cause severe or even fatal internal injuries in a crash.

Also see "Rear Safety Belt Comfort Guides" under *Lap-Shoulder Belt* ⇨ *71*.

According to accident statistics, children are safer when properly restrained in a rear seating position.

In a crash, children who are not buckled up can strike other people who are buckled up, or can be thrown out of the vehicle. Older children need to use safety belts properly.

⚠ Warning

Object-ID=2208724 LMD=03-Sep-2013

Never allow more than one child to wear the same safety belt. The safety belt cannot properly spread

(Continued)

Warning (Continued)

Object-ID=2208724 LMD=03-Sep-2013

the impact forces. In a crash, they can be crushed together and seriously injured. A safety belt must be used by only one person at a time.

1974662

⚠ Warning

Object-ID=2208303 LMD=03-Sep-2013

Never allow a child to wear the safety belt with the shoulder belt behind their back. A child can be seriously injured by not wearing the lap-shoulder belt properly. In a crash, the child would not be restrained by the shoulder belt. The child could move too far forward increasing the chance of head and neck injury. The child might also slide under the lap belt. The belt force would then be applied right on the abdomen. That could cause serious or fatal injuries. The shoulder belt should go over the shoulder and across the chest.

1966378

Infants and Young Children

Object-ID=4310488 Owner=Foster, Cindi LMD=26-Jan-2016 LMB=Clark, Lorien

Everyone in a vehicle needs protection! This includes infants and all other children. Neither the distance traveled nor the age and size of the traveler changes the need, for everyone, to use safety restraints. In fact, the law in every state in the United States and in every Canadian province says children up to some age must be restrained while in a vehicle.

⚠ Warning

Object-ID=3520726 LMD=28-Jun-2013

Children can be seriously injured or strangled if a shoulder belt is wrapped around their neck. The shoulder belt can tighten but cannot be loosened if it is locked. The shoulder belt locks when it is pulled all the way out of the retractor. It unlocks when the shoulder belt is allowed to go all the way back into the retractor, but it cannot do this if it is wrapped around a child's neck. If the shoulder belt is locked and tightened around a child's neck, the only way to loosen the belt is to cut it.

Never leave children unattended in a vehicle and never allow children to play with the safety belts.

Every time infants and young children ride in vehicles, they should have the protection provided by appropriate child restraints. Neither the vehicle's safety belt system nor its airbag system is designed for them.

Children who are not restrained properly can strike other people, or can be thrown out of the vehicle.

⚠ Warning

Object-ID=2208298 LMD=10-Dec-2015

Never hold an infant or a child while riding in a vehicle. Due to crash forces, an infant or a child will become so heavy it is not possible to hold it during a crash. For example, in a crash at only 40 km/h (25 mph), a 5.5 kg (12 lb) infant will suddenly become a 110 kg (240 lb) force on a person's arms. An infant or child should be secured in an appropriate restraint.

1974669

⚠ Warning

Object-ID=2208299 LMD=13-Sep-2013

Children who are up against, or very close to, any airbag when it inflates can be seriously injured or killed. Never put a rear-facing child restraint in the front outboard seat. Secure a rear-facing child restraint in a rear seat. It is also better to secure a forward-facing child restraint in a rear seat. If you must secure a forward-facing child

(Continued)

Warning (Continued)

Object-ID=2208299 LMD=13-Sep-2013

restraint in the front outboard seat, always move the front passenger seat as far back as it will go.

1966383

Child restraints are devices used to restrain, seat, or position children in the vehicle and are sometimes called child seats or car seats.

There are three basic types of child restraints:

- Forward-facing child restraints
- Rearward-facing child restraints
- Belt-positioning booster seats

The proper child restraint for your child depends on their size, weight, and age, and also on whether the child restraint is compatible with the vehicle in which it will be used.

For each type of child restraint, there are many different models available. When purchasing a child restraint, be sure it is designed to be used in a motor vehicle. If it is, the restraint will have a label saying that it meets federal motor vehicle safety standards. The restraint manufacturer's instructions that come with the restraint state the weight and height limitations for a particular child restraint. In addition, there are many kinds of restraints available for children with special needs.

⚠ Warning

Object-ID=3992541 LMD=13-Oct-2014

To reduce the risk of neck and head injury in a crash, infants and toddlers should be secured in a

(Continued)

Warning (Continued)

Object-ID=3992541 LMD=13-Oct-2014

rear-facing child restraint until age two, or until they reach the maximum height and weight limits of their child restraint.

⚠ Warning

Object-ID=2208301 LMD=03-Sep-2013

A young child's hip bones are still so small that the vehicle's regular safety belt may not remain low on the hip bones, as it should. Instead, it may settle up around the child's abdomen. In a crash, the belt would apply force on a body area that is unprotected by any bony structure. This alone could cause serious or fatal injuries. To reduce the risk of serious or fatal injuries during a crash, young children should always be secured in appropriate child restraints.

Child Restraint Systems

Object-ID=4311008 Owner=Foster, Cindi
LMD=27-Jan-2016 LMB=Rosekrans, Dee

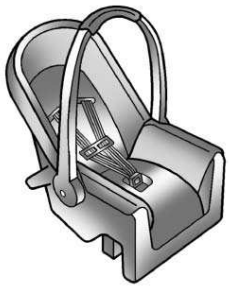

Rear-Facing Infant Seat

1966385

A rear-facing child restraint provides restraint with the seating surface against the back of the infant.

The harness system holds the infant in place and, in a crash, acts to keep the infant positioned in the restraint.

Forward-Facing Child Seat

1966387

A forward-facing child restraint provides restraint for the child's body with the harness.

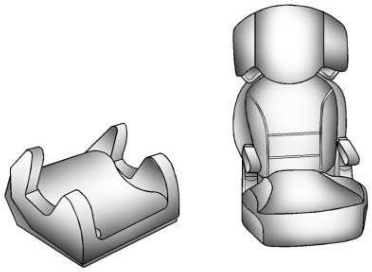

Booster Seats

1966384

A belt-positioning booster seat is used for children who have outgrown their forward-facing child restraint. Boosters are designed to improve the fit of the vehicle's safety belt system until the child is large enough for the vehicle safety belts to fit properly without a booster seat. See the safety belt fit test in *Older Children* ⇨ *89*.

Securing an Add-On Child Restraint in the Vehicle

⚠ Warning

Object-ID=2209257 LMD=10-Dec-2015

A child can be seriously injured or killed in a crash if the child restraint is not properly secured in the vehicle. Secure the child restraint properly in the vehicle using the vehicle's safety belt or LATCH system, following the instructions that came with that child restraint and the instructions in this manual.

To help reduce the chance of injury, the child restraint must be secured in the vehicle. Child restraint systems must be secured in vehicle seats by lap belts or the lap belt portion of a lap-shoulder belt, or by the LATCH system. See *Lower Anchors and Tethers for Children (LATCH System)* ⇨ *95* for more information. Children can be endangered in a crash if the child restraint is not properly secured in the vehicle.

When securing an add-on child restraint, refer to the instructions that come with the restraint which may be on the restraint itself or in a booklet, or both, and to this manual. The child restraint instructions are important, so if they are not available, obtain a replacement copy from the manufacturer.

Keep in mind that an unsecured child restraint can move around in a collision or sudden stop and injure people in the vehicle. Be sure to properly secure any child restraint in the vehicle — even when no child is in it.

In some areas of the United States and Canada, Certified Child Passenger Safety Technicians (CPSTs) are available to inspect and demonstrate how to correctly use and install child restraints. In the U.S., refer to the National Highway Traffic Safety Administration (NHTSA) website to locate the nearest child safety seat inspection station. For CPST availability in Canada, check with Transport Canada or the Provincial Ministry of Transportation office.

Securing the Child Within the Child Restraint

⚠ Warning

Object-ID=2210482 LMD=03-Sep-2013

A child can be seriously injured or killed in a crash if the child is not properly secured in the child restraint. Secure the child properly following the instructions that came with that child restraint.

Where to Put the Restraint

Object-ID=2966996 Owner=Foster, Cindi
LMD=26-Jan-2016 LMB=Clark, Lorien

According to accident statistics, children and infants are safer when properly restrained in an appropriate child restraint secured in a rear seating position.

Whenever possible, children aged 12 and under should be secured in a rear seating position.

Never put a rear-facing child restraint in the front. This is because the risk to the rear-facing child is so great if the airbag deploys.

⚠ Warning

Object-ID=2486420 LMD=03-Sep-2013

A child in a rear-facing child restraint can be seriously injured or killed if the front passenger airbag inflates. This is because the back of the rear-facing child restraint would be very close to the inflating airbag. A child in a forward-facing child restraint can be seriously injured or killed if the front passenger airbag inflates and the passenger seat is in a forward position.

Even if the passenger sensing system has turned off the front passenger frontal airbag, no system is fail-safe. No one can guarantee that an airbag will not deploy under some unusual circumstance, even though it is turned off.

Secure rear-facing child restraints in a rear seat, even if the airbag is off. If you secure a forward-facing child restraint in the front seat, always move the front passenger

(Continued)

Warning (Continued)

Object-ID=2486420 LMD=03-Sep-2013

seat as far back as it will go. It is better to secure the child restraint in a rear seat.

See *Passenger Sensing System* ⇨ *83* for additional information.

When securing a child restraint in a rear seating position, study the instructions that came with the child restraint to make sure it is compatible with this vehicle.

Child restraints and booster seats vary considerably in size, and some may fit in certain seating positions better than others.

Depending on where you place the child restraint and the size of the child restraint, you may not be able to access adjacent safety belts or LATCH anchors for additional passengers or child restraints. Adjacent seating positions should not be used if the child restraint prevents access to or interferes with the routing of the safety belt.

Wherever a child restraint is installed, be sure to follow the instructions that came with the child restraint system and secure the child restraint system properly.

Keep in mind that an unsecured child restraint can move around in a collision or sudden stop and injure people in the vehicle. Be sure to properly secure any child restraint in the vehicle — even when no child is in it.

Lower Anchors and Tethers for Children (LATCH System)

Object-ID=4327988 Owner=Landstrom, Michael LMD=02-Dec-2015 LMB=Landstrom, Michael

The LATCH system secures a child restraint during driving or in a crash. LATCH attachments on the child restraint are used to attach the child restraint to the anchors in the vehicle. The LATCH system is designed to make installation of a child restraint easier.

In order to use the LATCH system in your vehicle, you need a child restraint that has LATCH attachments. LATCH-compatible rear-facing and forward-facing child seats can be properly installed using either the LATCH anchors or the vehicle's safety belts. Do not use both the safety belts and the LATCH anchorage system to secure a rear-facing or forward-facing child seat.

Booster seats use the vehicle's safety belts to secure the child in the booster seat. If the manufacturer recommends that the booster seat be secured with the LATCH system, this can be done as long as the booster seat can be positioned properly and there is no interference with the proper positioning of the lap-shoulder belt on the child.

Make sure to follow the instructions that came with the child restraint, and also the instructions in this manual.

When installing a child restraint with a top tether, you must also use either the lower anchors or the safety belts to properly secure the child restraint. A child restraint must never be attached using only the top tether.

The LATCH anchorage system can be used until the combined weight of the child plus the child restraint is 29.5 kg (65 lbs). Use the safety belt alone instead of the LATCH anchorage system once the combined weight is more than 29.5 kg (65 lbs).

See *Securing Child Restraints (With the Safety Belt in the Rear Seat)* ⇨ *101* or *Securing Child Restraints (With the Safety Belt in the Front Seat)* ⇨ *104*.

Child restraints built after March 2014 will be labeled with the specific child weight up to which the LATCH system can be used to install the restraint.

The following explains how to attach a child restraint with these attachments in the vehicle.

Not all vehicle seating positions or child restraints have lower anchors and attachments or top tether anchors and attachments. In this case, the safety belt must be used (with top tether where available) to secure the child restraint. See *Securing Child Restraints (With the Safety Belt in the Rear Seat)* ⇨ *104* or *Securing Child Restraints (With the Safety Belt in the Front Seat)* ⇨ *104*.

Lower Anchors

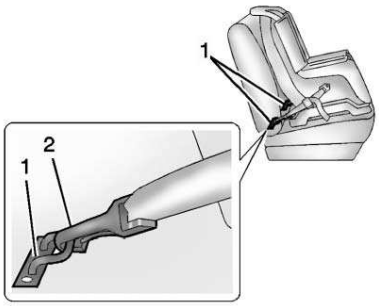

2713462

Lower anchors (1) are metal bars built into the vehicle. There are two lower anchors for each LATCH seating

position that will accommodate a child restraint with lower attachments (2).

Top Tether Anchor

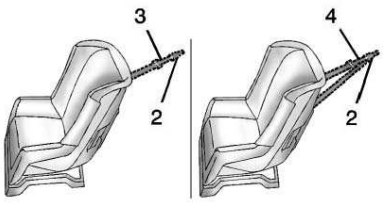

2750096

A top tether (3, 4) anchors the top of the child restraint to the vehicle.
A top tether anchor is built into the vehicle. The top tether attachment (2) on the child restraint connects to the top tether anchor in the vehicle in order to reduce the forward movement and rotation of the child restraint during driving or in a crash.

The child restraint may have a single tether (3) or a dual tether (4). Either will have a single attachment (2) to secure the top tether to the anchor.

Some child restraints with top tethers are designed for use with or without the top tether being attached. Others require the top tether always to be attached. In Canada, the law requires that forward-facing child restraints have a top tether, and that the tether be attached. Be sure to read and follow the instructions for your child restraint.

Lower Anchor and Top Tether Anchor Locations

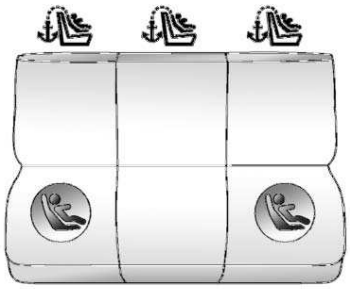

Rear Seat

2384845

: Seating positions with top tether anchors.

: Seating positions with two lower anchors.

1913385

To assist in locating the lower anchors, each seating position with lower anchors has two labels, near the crease between the seatback and the seat cushion.

1968732

To assist in locating the top tether anchors, the top tether anchor symbol is on the cover.

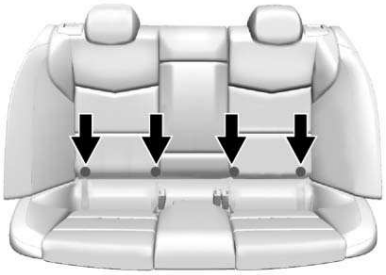

2726989

The outboard lower anchors are behind the vertical openings in the seat trim.

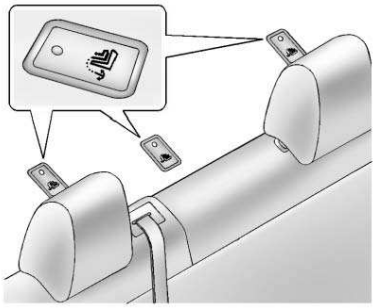

2564943

The top tether anchors are behind the rear seat, on the filler panel. Open the covers to access the anchors. Be sure to use an anchor on the same side of the vehicle as the seating position where the child restraint will be placed.

Do not secure a child restraint in a position without a top tether anchor if a national or local law requires that the top tether be attached, or if the instructions that come with the child restraint say that the top tether must be attached.

According to accident statistics, children and infants are safer when properly restrained in a child restraint system or infant restraint system secured in a rear seating position. See *Where to Put the Restraint* ⇨ *94* for additional information.

Securing a Child Restraint Designed for the LATCH System

⚠ Warning

Object-ID=2209285 LMD=18-Aug-2015

If a LATCH-type child restraint is not attached to anchors, the child restraint will not be able to protect the child correctly. In a crash, the child could be seriously injured or killed. Install a LATCH-type child restraint properly using the anchors, or use the vehicle's safety belts to secure the restraint, following the instructions that came with the child restraint and the instructions in this manual.

⚠ Warning

Object-ID=2208990 LMD=18-Aug-2015

To reduce the risk of serious or fatal injuries during a crash, do not attach more than one child restraint to a single anchor. Attaching more than one child restraint to a single anchor could cause the anchor or attachment to come loose or even break during a crash. A child or others could be injured.

⚠ Warning

Object-ID=3520811 LMD=18-Aug-2015

Children can be seriously injured or strangled if a shoulder belt is wrapped around their neck. The shoulder belt can tighten but cannot be loosened if it is locked. The shoulder belt locks when it is pulled all the way out of the retractor. It unlocks when the shoulder belt is allowed to go all

(Continued)

Warning (Continued)

Object-ID=3520811 LMD=18-Aug-2015

the way back into the retractor, but it cannot do this if it is wrapped around a child's neck. If the shoulder belt is locked and tightened around a child's neck, the only way to loosen the belt is to cut it.

Buckle any unused safety belts behind the child restraint so children cannot reach them. Pull the shoulder belt all the way out of the retractor to set the lock, and tighten the belt behind the child restraint after the child restraint has been installed.

Caution

Object-ID=2811114 LMD=25-Aug-2015

Do not let the LATCH attachments rub against the vehicle's safety belts. This may damage these parts.

(Continued)

Caution (Continued)

Object-ID=2811114 LMD=25-Aug-2015

If necessary, move buckled safety belts to avoid rubbing the LATCH attachments.

Do not fold the rear seatback when the seat is occupied. Do not fold the empty rear seat with a safety belt buckled. This could damage the safety belt or the seat. Unbuckle and return the safety belt to its stowed position, before folding the seat.

If you need to secure more than one child restraint in the rear seat, see *Where to Put the Restraint* ⇨ *94*.

This system is designed to make the installation of child restraints easier. When using lower anchors, do not use the vehicle's safety belts. Instead, use the vehicle's anchors and child restraint attachments to secure the restraints. Some restraints also use another vehicle anchor to secure a top tether.

1. Attach and tighten the lower attachments to the lower anchors. If the child restraint does not have lower attachments or the desired seating position does not have lower anchors, secure the child restraint with the top tether and the safety belts. Refer to your child restraint manufacturer instructions and the instructions in this manual.
   1.1. Find the lower anchors for the desired seating position.
   1.2. Put the child restraint on the seat.
   1.3. Attach and tighten the lower attachments on the child restraint to the lower anchors.
2. If the child restraint manufacturer recommends that the top tether be attached, attach and tighten the top tether to the top tether anchor, if equipped. Refer to the child restraint instructions and the following steps:
   2.1. Find the top tether anchor.
   2.2. Open the top tether anchor cover to expose the anchor.
   2.3. Route, attach, and tighten the top tether according to your child restraint instructions and the following instructions:

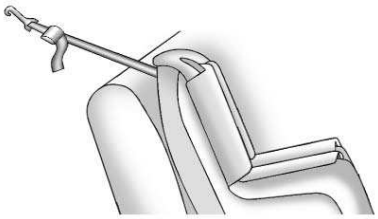

1913405

If the position you are using does not have a headrest or head restraint and you are using a single tether, route the tether over the seatback.

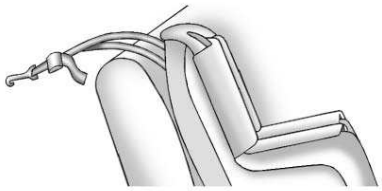

1913404

If the position you are using does not have a headrest or head restraint and you are using a dual tether, route the tether over the seatback.

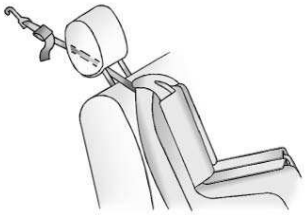

1913402

If the position you are using has an adjustable headrest or head restraint

and you are using a single tether, raise the headrest or head restraint and route the tether under the headrest or head restraint and in between the headrest or head restraint posts.

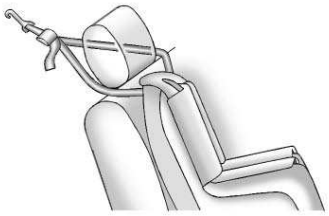

1913400

If the position you are using has an adjustable headrest or head restraint and you are using a dual tether, raise the headrest or head restraint and route the tether under the headrest or head restraint and around the headrest or head restraint posts.

3. Before placing a child in the child restraint, make sure it is securely held in place. To check, grasp the child restraint at the LATCH path and attempt to move it side to side and back and forth. There should be no more than 2.5 cm (1 in) of movement for proper installation.

Replacing LATCH System Parts After a Crash

Object-ID=2171781 Owner=Landstrom, Michael LMD=08-Oct-2015 LMB=Landstrom, Michael

⚠ Warning

Object-ID=2209619 LMD=03-Sep-2013

A crash can damage the LATCH system in the vehicle. A damaged LATCH system may not properly secure the child restraint, resulting in serious injury or even death in a crash. To help make sure the LATCH system is working properly after a crash, see your dealer to

(Continued)

Warning (Continued)

Object-ID=2209619 LMD=03-Sep-2013

have the system inspected and any necessary replacements made as soon as possible.

If the vehicle has the LATCH system and it was being used during a crash, new LATCH system parts may be needed.

New parts and repairs may be necessary even if the LATCH system was not being used at the time of the crash.

Securing Child Restraints (With the Safety Belt in the Rear Seat)

Object-ID=3965729 Owner=Foster, Cindi LMD=26-Jan-2016 LMB=Clark, Lorien

When securing a child restraint in a rear seating position, study the instructions that came with the child restraint to make sure it is compatible with this vehicle.

If the child restraint has the LATCH system, see *Lower Anchors and Tethers for Children (LATCH System)* ⇨ *95* for how and where to install the child restraint using LATCH. If a child restraint is secured in the vehicle using a safety belt and it uses a top tether, see *Lower Anchors and Tethers for Children (LATCH System)* ⇨ *95* for top tether anchor locations.

Do not secure a child seat in a position without a top tether anchor if a national or local law requires that the top tether be anchored, or if the instructions that come with the child restraint say that the top strap must be anchored.

If the child restraint or vehicle seat position does not have the LATCH system, you will be using the safety belt to secure the child restraint. Be sure to follow the instructions that came with the child restraint.

If more than one child restraint needs to be installed in the rear seat, be sure to read *Where to Put the Restraint* ⇨ *94*.

1. Put the child restraint on the seat.
2. Pick up the latch plate, and run the lap and shoulder portions of the vehicle safety belt through or around the restraint. The child restraint instructions will show you how.

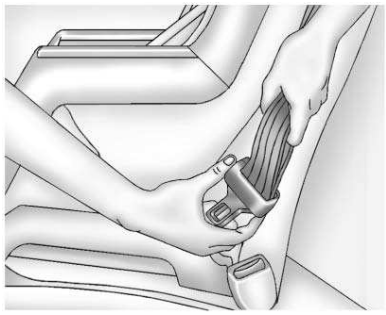

2325802

Tilt the latch plate to adjust the belt, if needed.

1974674

3. Push the latch plate into the buckle until it clicks. If the latch plate will not go fully into the buckle, check if the correct buckle is being used.

   Position the release button on the buckle, away from the child restraint system, so that the safety belt could be quickly unbuckled if necessary.

1974681

4. Pull the shoulder belt all the way out of the retractor to set the lock. When the retractor lock is set, the belt can be tightened but not pulled out of the retractor.

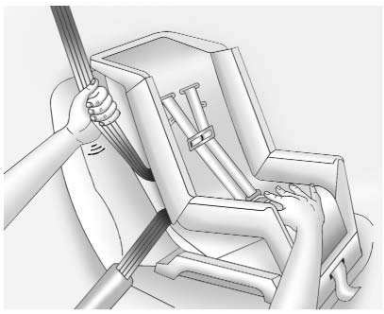

1974685

5. To tighten the belt, push down on the child restraint, pull the shoulder portion of the belt to tighten the lap portion of the belt, and feed the shoulder belt back into the retractor. When installing a forward-facing child restraint, it may be helpful to use your knee to push down on the child restraint as you tighten the belt.

   Try to pull the belt out of the retractor to make sure the retractor is locked. If the retractor is not locked, repeat Steps 4 and 5.

6. If the child restraint has a top tether, follow the child restraint manufacturer's instructions regarding the use of the top tether. See *Lower Anchors and Tethers for Children (LATCH System)* ⇨ *95*.

7. Before placing a child in the child restraint, make sure it is securely held in place. To check, grasp the child restraint at the safety belt path and attempt to move it side to side and back and forth. When the child restraint is properly installed, there should be no more than 2.5 cm (1 in) of movement.

To remove the child restraint, unbuckle the vehicle safety belt and let it return to the stowed position. If the top tether is attached to a top tether anchor, disconnect it.

Securing Child Restraints (With the Safety Belt in the Front Seat)

Object-ID=4430077 Owner=Foster, Cindi LMD=29-Feb-2016 LMB=Foster, Cindi

This vehicle has airbags. A rear seat is a safer place to secure a forward-facing child restraint. See *Where to Put the Restraint* ⇨ *94*.

In addition, the vehicle has a passenger sensing system which is designed to turn off the front outboard passenger frontal airbag and knee airbag under certain conditions. See *Passenger Sensing System* ⇨ *83* and *Passenger Airbag Status Indicator* ⇨ *130* for more information, including important safety information.

Never put a rear-facing child seat in the front. This is because the risk to the rear-facing child is so great, if the airbag deploys.

⚠ Warning

Object-ID=3650801 LMD=10-Dec-2015

A child in a rear-facing child restraint can be seriously injured or killed if the front outboard passenger frontal airbag inflates. This is because the back of the rear-facing child restraint would be very close to the inflating airbag. A child in a forward-facing child restraint can be seriously injured or killed if the front outboard passenger frontal airbag inflates and the passenger seat is in a forward position.

Even if the passenger sensing system has turned off the front outboard passenger airbag(s), no system is fail-safe. No one can guarantee that an airbag will not deploy under some unusual circumstance, even though the airbag(s) are off.

(Continued)

Warning (Continued)

Object-ID=3650801 LMD=10-Dec-2015

Secure rear-facing child restraints in a rear seat, even if the airbag(s) are off. If you secure a forward-facing child restraint in the front outboard passenger seat, always move the seat as far back as it will go. It is better to secure the child restraint in a rear seat.

See *Passenger Sensing System* ⇨ *83* for additional information.

If the child restraint uses a top tether, see *Lower Anchors and Tethers for Children (LATCH System)* ⇨ *95* for top tether anchor locations.

Do not secure a child seat in a position without a top tether anchor if a national or local law requires that the top tether be anchored, or if the instructions that come with the child restraint say that the top strap must be anchored.

In Canada, the law requires that forward-facing child restraints have a top tether, and that the tether be attached.

When using the lap-shoulder belt to secure the child restraint in this position, follow the instructions that came with the child restraint and the following instructions:

1. Move the seat as far back as it will go before securing the forward-facing child restraint. Move the seat upward or the seatback to an upright position, if needed, to get a tight installation of the child restraint.

   When the passenger sensing system has turned off the front outboard passenger frontal airbag and knee airbag, the off indicator on the passenger airbag status indicator should light and stay lit when you start the vehicle. See *Passenger Airbag Status Indicator* ⇨ *130*.

2. Put the child restraint on the seat.

3. Pick up the latch plate, and run the lap and shoulder portions of the vehicle's safety belt through or around the restraint. The child restraint instructions will show you how.

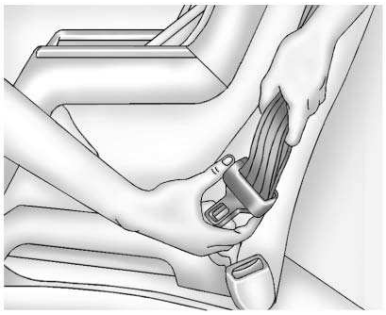

2325802

   Tilt the latch plate to adjust the belt if needed.

1974674

4. Push the latch plate into the buckle until it clicks.

   Position the release button on the buckle, away from the child restraint system, so that the safety belt could be quickly unbuckled if necessary.

1974681

5. Pull the shoulder belt all the way out of the retractor to set the lock. When the retractor lock is set, the belt can be tightened but not pulled out of the retractor.

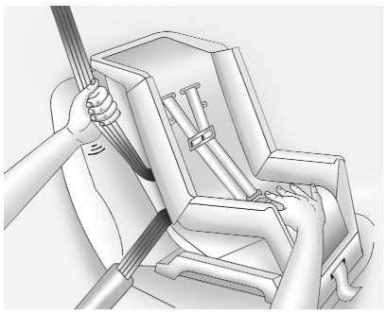

1974685

6. To tighten the belt, push down on the child restraint, pull the shoulder portion of the belt to tighten the lap portion of the belt, and feed the shoulder belt back into the retractor. When installing a forward-facing child restraint, it may be helpful to use your knee to push down on the child restraint as you tighten the belt.

   Try to pull the belt out of the retractor to make sure the retractor is locked. If the retractor is not locked, repeat Steps 5 and 6.

7. Before placing a child in the child restraint, make sure it is securely held in place. To check, grasp the child restraint at the safety belt path and attempt to move it side to side and back and forth. When the child restraint is properly installed, there should be no more than 2.5 cm (1 in) of movement.

If the airbags are off, the off indicator in the passenger airbag status indicator will come on and stay on when the vehicle is started.

If a child restraint has been installed and the on indicator is lit, see “If the On Indicator Is Lit for a Child Restraint” under *Passenger Sensing System* ⇨ *83*.

To remove the child restraint, unbuckle the vehicle safety belt and let it return to the stowed position.

Cadillac CTS/CTS-V Owner Manual (GMNA-Localizing-U.S./Canada-2ndPrint-11254870) - 2017 - Final Review - 6/14/16

Storage

Storage Compartments

Storage Compartments 107
Instrument Panel Storage 107
Glove Box 108
Cupholders 108
Armrest Storage 108
Center Console Storage 109

Additional Storage Features

Cargo Tie-Downs 109
Convenience Net 110

Storage Compartments

Object-ID=2887505 Owner=Perkins, Frank
LMD=21-Sep-2015 LMB=Perkins, Frank

⚠ Warning

Object-ID=2887642 LMD=06-Jul-2012

Do not store heavy or sharp objects in storage compartments. In a crash, these objects may cause the cover to open and could result in injury.

Instrument Panel Storage

Object-ID=4215405 Owner=Perkins, Frank
LMD=01-Oct-2015 LMB=Perkins, Frank

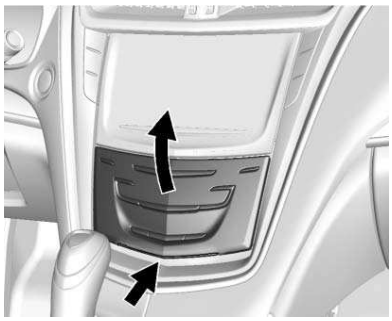

2916820

Touch the bottom of the climate control system panel until the door automatically starts to open. The storage area may contain a USB port. See the infotainment manual.

Keep the storage area door closed while driving.

Touch the bottom of the climate control system again until the door automatically starts to close.

Glove Box

Object-ID=2918041 Owner=Perkins, Frank
LMD=01-Oct-2015 LMB=Perkins, Frank

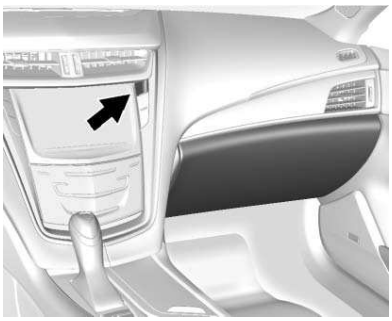

2916821

To open, press the button. Close the glove box manually.

Cupholders

Object-ID=2907898 Owner=Perkins, Frank
LMD=01-Oct-2015 LMB=Perkins, Frank

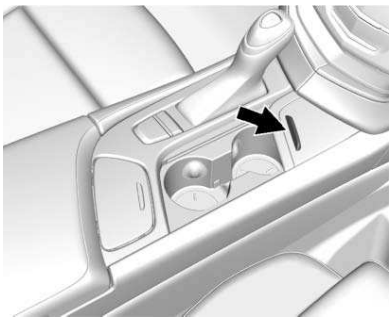

2907869

Cupholders in the front center console have a power retractable cover. Push the handle forward to express open. Pull the handle rearward to express close.

The power cover will operate when the vehicle door is opened and in ACC, RUN, or Retained Accessory Power (RAP) mode. The cover can be opened or closed manually by pushing or pulling the handle. See *Retained Accessory Power (RAP)* ⇨ *219*.

Power Retractable Cover Anti-Pinch Feature

If any object is in the path of the power cover when it is active, the cover will stop at the obstruction and auto-reverse to a preset position. The cover will return to normal operation after the obstruction is removed.

Armrest Storage

Object-ID=2918047 Owner=Perkins, Frank
LMD=01-Oct-2015 LMB=Perkins, Frank

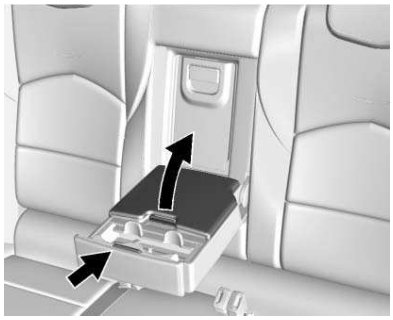

2916819

Pull the armrest down to access the rear seat storage area and cupholders.

Cadillac CTS/CTS-V Owner Manual (GMNA-Localizing-U.S./Canada-2ndPrint-11254870) - 2017 - Final Review - 6/14/16

Press the latch to open the storage area.

Center Console Storage

Object-ID=4215419 Owner=Perkins, Frank
LMD=01-Oct-2015 LMB=Perkins, Frank

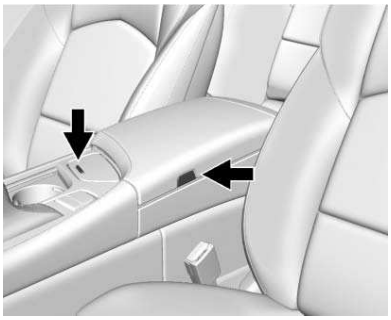

3346079

Press the button to access the storage area in front of the armrest cover.

Press the button on the driver side of the cover to access the storage area under the armrest. There are two USB ports, a power outlet, and an input jack inside.

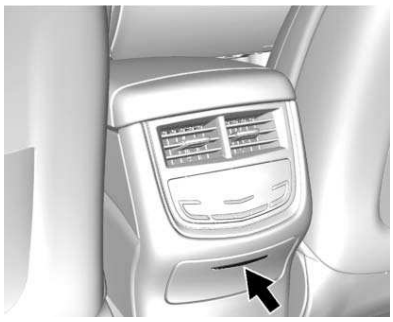

2907906

If equipped, press the top of the door to open the storage area on the rear of the center console. If equipped, there is a power outlet inside.

Additional Storage Features

Cargo Tie-Downs

Object-ID=2714661 Owner=Perkins, Frank
LMD=01-Oct-2015 LMB=Perkins, Frank

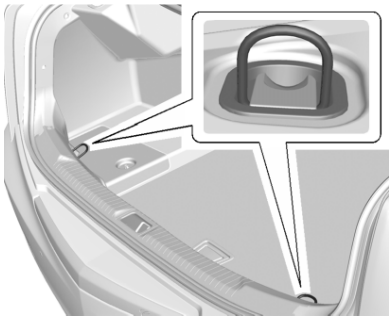

2714971

The cargo tie-downs can be used to secure small loads inside the trunk.

Convenience Net

Object-ID=2918181 Owner=Perkins, Frank
LMD=01-Oct-2015 LMB=Perkins, Frank

If equipped, the convenience net is in the rear. Put small loads behind the net. It can also be positioned into an envelope style to hold smaller items. The net is not for heavier loads. Store items as far forward as you can.

Cadillac CTS/CTS-V Owner Manual (GMNA-Localizing-U.S./Canada-2ndPrint-11254870) - 2017 - Final Review - 6/14/16

Instruments and Controls

Controls

Steering Wheel Adjustment 112
Steering Wheel Controls 113
Heated Steering Wheel 113
Horn 113
Windshield Wiper/Washer 113
Compass 115
Clock 115
Power Outlets 116
Wireless Charging 117

Warning Lights, Gauges, and Indicators

Warning Lights, Gauges, and Indicators 119
Instrument Cluster 120
Speedometer 124
Odometer 125
Trip Odometer 125
Tachometer 125
Fuel Gauge 125
Boost Gauge (Performance Configuration Only) 126
Engine Oil Temperature Gauge (Performance Configuration Only) 127
Engine Coolant Temperature Gauge 128
Safety Belt Reminders 129
Airbag Readiness Light 129
Passenger Airbag Status Indicator 130
Charging System Light 131
Malfunction Indicator Lamp (Check Engine Light) 131
Brake System Warning Light 133
Parking Brake Light 133
Service Electric Parking Brake Light 134
Antilock Brake System (ABS) Warning Light 134
Lane Keep Assist (LKA) Light ... 134
Vehicle Ahead Indicator 135
Traction Off Light 135
StabiliTrak® OFF Light 136
Traction Control System (TCS)/ StabiliTrak® Light 136
Engine Coolant Temperature Warning Light 136
Tire Pressure Light 137
Engine Oil Pressure Light 137
Low Fuel Warning Light 138
Auto Stop Mode (Uplevel Cluster Only) 138
Security Light 138
High-Beam On Light 139
Adaptive Forward Lighting (AFL) Light 139
Lamps On Reminder 139
Cruise Control Light 139
Door Ajar Light 140

Information Displays

Driver Information Center (DIC) 140
Head-Up Display (HUD) 143

Vehicle Messages

Vehicle Messages 147
Battery Voltage and Charging Messages 147
Brake System Messages 147
Compass Messages 148
Cruise Control Messages 148
Door Ajar Messages 149
Engine Cooling System Messages 149
Engine Oil Messages 149
Engine Power Messages 150
Fuel System Messages 150
Key and Lock Messages 150
Lamp Messages 151
Object Detection System Messages 151

Ride Control System Messages 154
Airbag System Messages 156
Safety Belt Messages 156
Security Messages 156
Service Vehicle Messages 156
Starting the Vehicle Messages ... 157
Tire Messages 157
Transmission Messages 157
Vehicle Reminder Messages 158
Vehicle Speed Messages 158
Washer Fluid Messages 158

Vehicle Personalization

Vehicle Personalization 158

Universal Remote System

Universal Remote System 163
Universal Remote System Programming (US/CAN) 163
Universal Remote System Programming (MEXICO) 165
Universal Remote System Operation 167

Controls

Steering Wheel Adjustment

Object-ID=3272981 Owner=Parker, Cynthia
LMD=16-May-2013 LMB=Parker, Cynthia

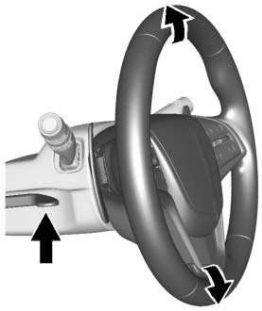

3400926

To adjust the steering wheel:

1. Pull the lever down.
2. Move the steering wheel up or down.
3. Pull or push the steering wheel closer or away from you.
4. Pull the lever up to lock the steering wheel in place.

Power Tilt and Telescoping Wheel

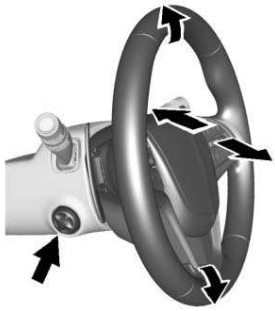

3400920

If equipped, the control is on the left side of the steering column.

- Push the control up or down to tilt the steering wheel up or down.
- Push the control forward or rearward to move the steering wheel toward the front or rear of the vehicle.

Do not adjust the steering wheel while driving.

To set the power tilt wheel memory position, see *Memory Seats* ⇨ *63*.

Steering Wheel Controls

Object-ID=4533581 Owner=Mason, Scott
LMD=06-Jun-2016 LMB=Mason, Scott

The infotainment system can be operated by using the steering wheel controls. See "Steering Wheel Controls" in the infotainment manual.

Heated Steering Wheel

Object-ID=4490123 Owner=Parker, Cynthia
LMD=08-Apr-2016 LMB=Parker, Cynthia

2741610

: If equipped, press to turn the heated steering wheel on or off. A light next to the button displays when the feature is turned on.

The steering wheel takes about three minutes to be fully heated.

Horn

Object-ID=2152619 Owner=Parker, Cynthia
LMD=12-Sep-2011 LMB=Parker, Cynthia

Press on the steering wheel pad to sound the horn.

Windshield Wiper/Washer

Object-ID=4490217 Owner=Parker, Cynthia
LMD=05-May-2016 LMB=Parker, Cynthia

3272353

With the ignition in ACC/ACCESSORY or ON/RUN/START, move the windshield wiper lever to select the wiper speed.

HI : Use for fast wipes.

LO : Use for slow wipes.

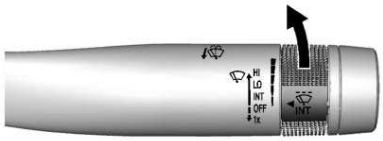

3272708

INT : Use this setting for intermittent wipes or for Rainsense™ wipes, when Rainsense is enabled. For intermittent wipes, move the lever up to INT, then turn the INT band up for more frequent wipes or down for less frequent wipes. If Rainsense is enabled, see “Rainsense” later in this section.

If the windshield wipers are in use for a while when driving, the exterior lamps come on automatically if the exterior lamp control is in AUTO. See “Wiper-Activated Headlamps” later in this section.

OFF : Use to turn the wipers off.

1X : For a single wipe, briefly move the wiper lever down. For several wipes, hold the wiper lever down.

: Pull the windshield wiper lever toward you to spray windshield washer fluid and activate the wipers. The wipers will continue until the lever is released or the maximum wash time is reached. When the windshield wiper lever is released, additional wipes may occur depending on how long the windshield washer had been activated. See *Washer Fluid* ⇨ *300* for information on filling the windshield washer fluid reservoir.

⚠ Warning

Object-ID=2207526 LMD=02-Jun-2010

In freezing weather, do not use the washer until the windshield is warmed. Otherwise the washer fluid can form ice on the windshield, blocking your vision.

Clear snow and ice from the wiper blades and windshield before using them. If frozen to the windshield, carefully loosen or thaw them. Damaged blades should be replaced. See *CELL Link Error - Link target cell (cell ID 183279) is invalid for this publication.* ⇨ *#*.

Heavy snow or ice can overload the wiper motor. See *Electrical System Overload* ⇨ *309*.

Wiper Parking

If the ignition is put in OFF while the wipers are on LO, HI, or INT, they will immediately stop.

If the windshield wiper lever is then moved to OFF before the driver door is opened or within 10 minutes, the wipers will restart and move to the base of the windshield.

If the ignition is put in OFF while the wipers are performing wipes due to windshield washing or Rainsense wipes, the wipers continue to run until they reach the base of the windshield.

Rainsense™

If equipped, there is a sensor near the top center of the windshield detects the amount of water on the windshield and controls the frequency of the windshield wiper. To turn this feature on or off, see “Rain Sense Wipers” under *Vehicle Personalization* ⇨ *158*.

Keep this area of the windshield clear of debris to allow for best system performance.

INT : When enabled, move the windshield wiper lever to INT. Turn the INT band on the wiper lever to adjust the sensitivity.

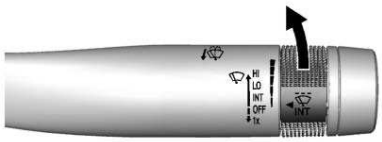

3272708

- Turn the band up for more sensitivity to moisture.
- Turn the band down for less sensitivity to moisture.
- Move the windshield wiper lever out of the INT position to deactivate Rainsense.

Wiper Arm Assembly Protection

If equipped with wiper arm assembly protection, when using an automatic car wash, move the windshield wiper

lever to OFF. This disables the automatic Rainsense windshield wipers.

With Rainsense, if the transmission is in N (Neutral) and the vehicle speed is very slow, the wipers will automatically stop at the base of the windshield.

The wiper operations return to normal when the transmission is no longer in N (Neutral) or the vehicle speed has increased.

Wiper-Activated Headlamps

This feature activates the headlamps and parking lamps after the windshield wipers have been in use for a while. The transition time for the lamps coming on varies based on the wiper speed. For this feature to work, the exterior lamp control must be in AUTO.

The wiper-activated headlamps immediately turn off when the ignition is turned to LOCK/OFF, or the windshield wiper control is turned off.

Rear Camera Mirror Washer

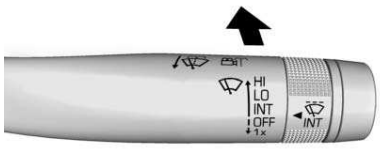

4494843

If equipped, push the windshield wiper lever forward to spray washer fluid on the rear camera mirror. The lever returns to its starting position when released. See *Rear Camera Mirror* ⇨ *50*.

Compass

Object-ID=2718908 Owner=Owens, Lynnette LMD=07-Oct-2015 LMB=Clark, Lorien

The vehicle may have a compass display on the Driver Information Center (DIC). The compass receives its heading and other information from the Global Positioning System (GPS) antenna, StabiliTrak®, and vehicle speed information.

The compass system is designed to operate for a certain number of miles or degrees of turn before needing a signal from the GPS satellites. When the compass display shows CAL, drive the vehicle for a short distance in an open area where it can receive a GPS signal. The compass system will automatically determine when a GPS signal is restored and provide a heading again. See *Compass Messages* ⇨ *148* for the messages that may be displayed for the compass.

Clock

Object-ID=4533588 Owner=Mason, Scott LMD=13-Jun-2016 LMB=Mason, Scott

The clock can be set using the infotainment system. See "System“ under “Settings” in the infotainment manual.

Power Outlets

Object-ID=3273159 Owner=Parker, Cynthia LMD=29-Jul-2015 LMB=Parker, Cynthia

Power Outlets 12 Volt Direct Current

Accessory power outlets can be used to plug in electrical equipment, such as a cell phone or MP3 player.

The vehicle has three 12-volt accessory power outlets:

- Inside the center console storage in front of the armrest cover.
- Inside the storage area under the armrest cover.
- Inside the storage area on the rear of the center console, if equipped.

These outlets are powered while the vehicle is in ON/RUN/START or ACC/ACCESSORY mode, or until the driver door is opened within 10 minutes of turning off the vehicle.

Lift the cover to access the accessory power outlet.

Certain electrical accessories may not be compatible with the accessory power outlet and could overload a vehicle circuit breaker or adapter fuse. If overloaded, the circuit breaker will reset after all devices are disconnected or if Retained Accessory Power (RAP) is turned off and then back on. See *Retained Accessory Power (RAP)* ⇨ *219*. Wait one minute to allow the circuit breaker to reset before reconnecting devices or turning RAP back on. If the problem continues, the issue could be within your device. Try another known good device to make sure the circuit breaker is operating properly. If this does not resolve your problem, see your dealer.

It is possible to replace the factory power outlet with a cigar lighter receptacle, if desired. This requires the factory installed circuit breaker to be replaced with a standard minifuse by the dealer. A minifuse will not reset and will have to be replace if blown.

Caution

Object-ID=3511692 LMD=20-Jun-2013

Failure to replace the circuit breaker with the minifuse could overheat the cigar lighter and damage the vehicle.

When adding electrical equipment, be sure to follow the proper installation instructions included with the equipment. See *Add-On Electrical Equipment* ⇨ *276*.

Caution

Object-ID=4247560 LMD=29-Jul-2015

Adding any electrical equipment to the vehicle may damage it or keep other components from working as they should. The repairs would not be covered by the vehicle warranty. Do not use equipment exceeding maximum amperage rating of 15 amperes. Check with your dealer before adding electrical equipment.

Caution

Object-ID=2864905 LMD=31-May-2012

Hanging heavy equipment from the power outlet can cause damage not covered by the vehicle warranty. The power outlets are designed for accessory power plugs only, such as cell phone charge cords.

Power Outlet 110/120 Volt Alternating Current

If equipped, this power outlet is inside the center console. It can be used to plug in electrical equipment that uses a maximum limit of 150 watts.

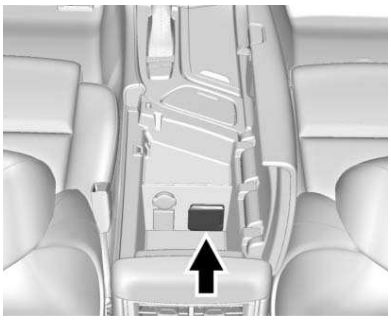

3379337

An indicator light on the outlet turns on to show it is in use. The light comes on when the ignition is in ON/RUN, equipment requiring less than 150 watts is plugged into the outlet, and no system fault is detected.

The indicator light does not come on when the ignition is in LOCK/OFF or if the equipment is not fully seated into the outlet.

If equipment is connected using more than 150 watts or a system fault is detected, a protection circuit shuts off the power supply and the indicator light turns off. To reset the circuit, unplug the item and plug it back in or turn the Retained Accessory Power (RAP) off and then back on. See *Retained Accessory Power (RAP)* ⇨ *219*. The power restarts when equipment using 150 watts or less is plugged into the outlet and a system fault is not detected.

The power outlet is not designed for the following and may not work properly, if this equipment is plugged in:

- Equipment with high initial peak wattage such as: compressor-driven refrigerators and electric power tools.
- Other equipment requiring an extremely stable power supply such as: microcomputer-controlled electric blankets, touch sensor lamps, etc.
- Medical equipment.

Wireless Charging

Object-ID=4215264 Owner=Parker, Cynthia LMD=01-Oct-2015 LMB=Parker, Cynthia

The vehicle may have wireless charging in the storage behind the climate control system. See *Instrument Panel Storage* ⇨ *107*. The system wirelessly charges one PMA or Qi compatible mobile device.

To check for phone or other device compatibility:

- In the U.S., see my.cadillac.com/learn.
- In Canada, see gmtotalconnect.ca.
- Or, see your dealer for details.

⚠ Warning

Object-ID=4068879 LMD=19-May-2015

Wireless charging can affect the operation of an implanted pacemaker or other medical devices. If you have one, it is recommended to consult with your doctor before using the wireless charging system.

The vehicle must be in ON/RUN/START, ACC/ACCESSORY, or Retained Accessory Power (RAP). The wireless charging feature may not correctly indicate charging when the vehicle is in RAP. See *Retained Accessory Power (RAP)* ⇨ *219*.

The operating temperature is –20 °C (–4 °F) to 60 °C (140 °F) for the charging system and 0 °C (32 °F) to 35 °C (95 °F) for the phone.

⚠ Warning

Object-ID=3660992 LMD=20-Mar-2015

Remove all metal objects from the charging pad before charging your mobile device. Metal objects, such as coins, keys, rings, or paper clips, between the phone and charging pad will become very hot. On the rare occasion that the charging system does not detect a metal object, and the object gets wedged between the phone and charger, remove the phone and allow the metallic object to cool before removing it from the charging pad, to prevent burns.

3533514

To charge a mobile device:

1. Open the climate control system panel.

2. Remove all objects from the charging pad. The system may not charge if there are any objects on the charging pad.
3. Place the mobile device face up on the symbol on the charging pad.
4. The will display on the on the infotainment screen. This indicates that the mobile device is properly positioned and charging. If a phone is placed on the charging pad and does not display, remove the phone from the pad, turn 180 degrees and wait three seconds before placing/aligning the phone on the pad again.

Keep the storage door closed while driving.

Warning Lights, Gauges, and Indicators

Object-ID=4002506 Owner=Owens, Lynnette LMD=07-Oct-2015 LMB=Clark, Lorien

Warning lights and gauges can signal that something is wrong before it becomes serious enough to cause an expensive repair or replacement. Paying attention to the warning lights and gauges could prevent injury.

Some warning lights come on briefly when the engine is started to indicate they are working. When one of the warning lights comes on and stays on while driving, or when one of the gauges shows there may be a problem, check the section that explains what to do. Waiting to do repairs can be costly and even dangerous.

Instrument Cluster

Object-ID=4491530 Owner=Owens, Lynnette LMD=09-Jun-2016 LMB=Owens, Lynnette

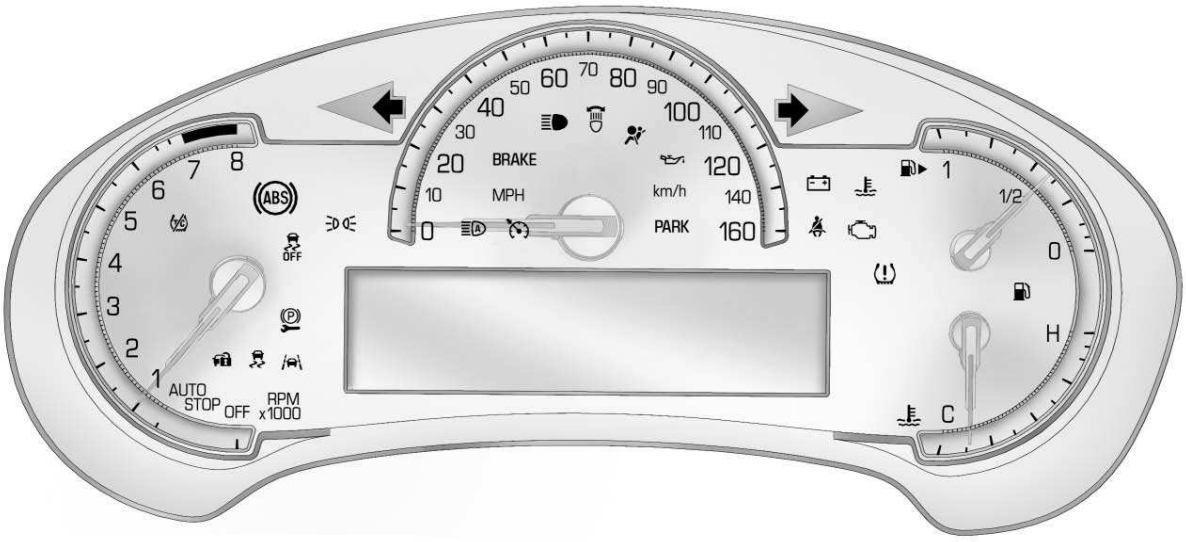

English Base Cluster with Auto Stop Shown, Metric Similar

4484956

Cadillac CTS/CTS-V Owner Manual (GMNA-Localizing-U.S./Canada-2ndPrint-11254870) - 2017 - Final Review - 6/14/16

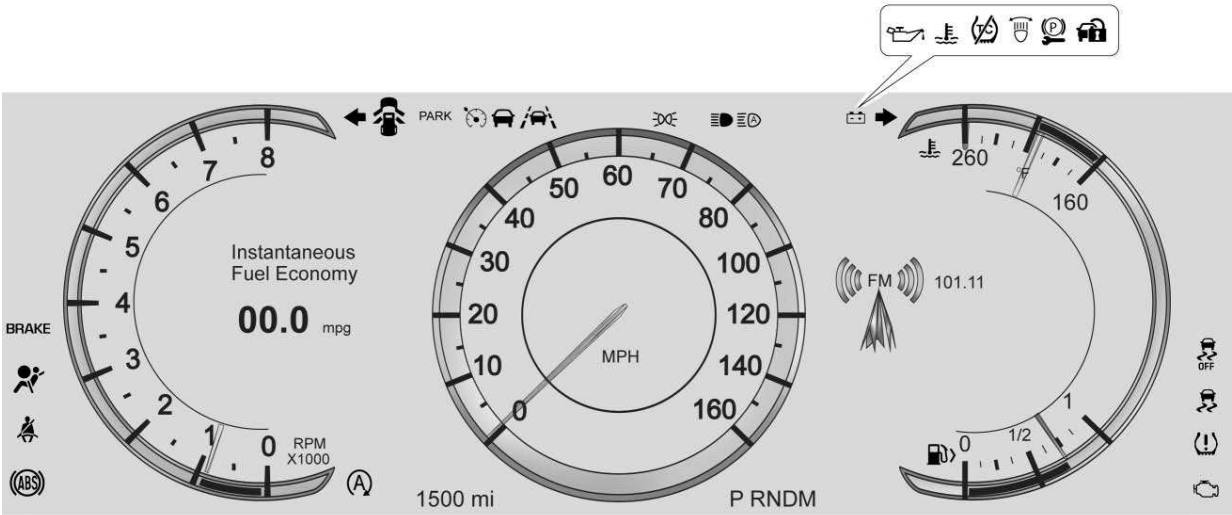

English Uplevel Balanced Cluster Shown, Metric Similar

4165819

Cadillac CTS/CTS-V Owner Manual (GMNA-Localizing-U.S./Canada-2ndPrint-11254870) - 2017 - Final Review - 6/14/16

Reconfigurable Instrument Cluster

The uplevel cluster display layout can be changed.

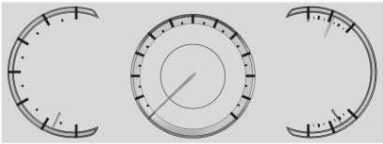

Balanced Configuration

4086669

The Balanced configuration has three interactive display zones: one in the center of each of the gauges.

Enhanced Configuration

4086675

The Enhanced configuration has three interactive display zones.

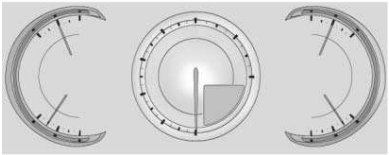

Performance Configuration (CTS-V Series and V-Sport Only)

4165813

The Performance configuration has two interactive display zones.

Use the five-way control on the right side of the steering wheel to move between the different display zones and scroll through the different displays.

To change the cluster configuration:

1. Find the Options page in one of the interactive display zones on the cluster.
2. Press SEL to enter the Options menu.
3. Scroll down to highlight Display Layout. Then press SEL to select it.
4. Each layout in the menu is represented by a small preview image of the display layout. Scroll up or down and highlight the selection. Press SEL to select the desired cluster configuration.
5. Exit the Display Layout menu by pressing <.

Cluster Application Displays

The cluster can display information regarding Navigation, Audio, and Phone. On the base cluster, a speedometer can also be displayed in the center zone.

Navigation

If there is an active route, press SEL to end route guidance or turn the voice prompts on or off.

Cadillac CTS/CTS-V Owner Manual (GMNA-Localizing-U.S./Canada-2ndPrint-11254870) - 2017 - Final Review - 6/14/16

Audio

While the Audio application page is displayed, press SEL to enter the Audio menu. In the Audio menu, search for music, select from favorites, or change the audio source

Phone

While the Phone application page is displayed, press SEL to enter the Phone menu. In the Phone menu, if there is no active phone call, view recent calls, select from favorites, or scroll through contacts. If there is an active call, mute the phone or switch to handset operation.

Cluster Options Menu

To enter the cluster Options menu:

1. Use the five-way control on the right side of the steering wheel to find the Options page in one of the interactive display zones on the cluster.
2. Press SEL on the center of the five-way control to enter the Options menu.

Units : Press SEL while Units is highlighted to enter the Unit menu. Choose English or metric units by pressing SEL while the desired item is highlighted. A checkmark will be displayed next to the selected item.

Info Pages : Press SEL while Info Pages is highlighted to select the items to be displayed in the DIC info displays. See *Driver Information Center (DIC)* ⇨ *140*.

Display Layout : Press SEL while Display Layout is highlighted to change the configuration of the uplevel cluster. See “Reconfigurable Instrument Cluster” earlier in this section.

Head-up Display (HUD) Rotation : This feature allows for adjusting the angle of the HUD image. Press SEL on the steering wheel controls while Head-up Display Rotation is highlighted to enter Adjust Mode. Press ∧ or ∨ to adjust the angle of the HUD display. Press < or > to highlight OK, then press SEL to save the setting. Cancel can also be selected to cancel the setting. The vehicle must be in P (Park).

Fav Button Options : Press SEL while Fav Button Options is highlighted to select between FAV Primary and SEEK Primary. This selection allows for configuration of the △ and ▽ steering wheel controls. When FAV Primary is selected, pressing △ and ▽ will go to the next or previous favorite and pressing and holding △ and ▽ will seek. When SEEK Primary is selected, pressing △ and ▽ will seek and pressing and holding △ and ▽ will go to the next or previous favorite.

Open Source Software : Press SEL while Open Source Software is highlighted to display open source software information.

Speedometer

Object-ID=2150354 Owner=Owens, Lynnette
LMD=06-Nov-2015 LMB=Owens, Lynnette

The speedometer shows the vehicle's speed in either kilometers per hour (km/h) or miles per hour (mph).

Odometer

Object-ID=2739014 Owner=Owens, Lynnette LMD=07-Oct-2015 LMB=Clark, Lorien

The odometer shows how far the vehicle has been driven, in either kilometers or miles.

Trip Odometer

Object-ID=2274676 Owner=Owens, Lynnette LMD=07-Oct-2015 LMB=Clark, Lorien

The trip odometer shows how far the vehicle has been driven since the trip odometer was last reset.

The trip odometer is accessed and reset through the Driver Information Center (DIC). See *Driver Information Center (DIC)* ⇨ *140*.

Tachometer

Object-ID=4165799 Owner=Owens, Lynnette LMD=07-Oct-2015 LMB=Clark, Lorien

The tachometer displays the engine speed in revolutions per minute (rpm).

On the base cluster, if the vehicle has the Stop/Start system, when the ignition is in ON/RUN, the tachometer indicates the vehicle status. When pointing to AUTO STOP, the engine is off but the vehicle is on and can move. The engine could auto start at any time. When the indicator points to OFF, the vehicle is off.

When the engine is on, the tachometer will indicate the engine's revolutions per minute (rpm). The tachometer may vary by several hundred rpm's, during Auto Stop mode, when the engine is shutting off and restarting.

A slight bump may be felt when the transmission is determining the most fuel efficient operating range.

Caution

Object-ID=2890300 LMD=20-Mar-2014

If the engine is operated with the rpm's in the warning area at the high end of the tachometer, the vehicle could be damaged, and the damage would not be covered by the vehicle warranty. Do not operate the engine with the rpm's in the warning area.

Fuel Gauge

Object-ID=4086808 Owner=Owens, Lynnette LMD=07-Oct-2015 LMB=Clark, Lorien

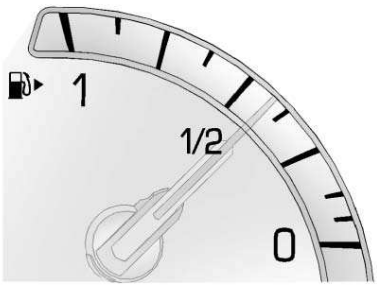

Base Level

2653931

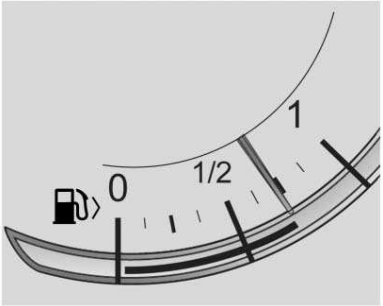

Uplevel Balanced Configuration

4165754

When the ignition is on, the fuel gauge indicates about how much fuel is left in the tank.

There is an arrow near the fuel gauge pointing to the side of the vehicle the fuel door is on.

When the indicator nears empty, the low fuel light comes on. There still is a little fuel left, but the vehicle should be refueled soon.

Here are four things that some owners ask about. None of these show a problem with the fuel gauge:

- At the service station, the fuel pump shuts off before the gauge reads full.
- It takes a little more or less fuel to fill up than the gauge indicated. For example, the gauge may have indicated the tank was half full, but it actually took a little more or less than half the tank's capacity to fill the tank.
- The gauge moves a little while turning a corner or speeding up.
- The gauge takes a few seconds to stabilize after the ignition is turned on, and goes back to empty when the ignition is turned off.

Boost Gauge (Performance Configuration Only)

Object-ID=4503262 Owner=Owens, Lynnette LMD=05-May-2016 LMB=Owens, Lynnette

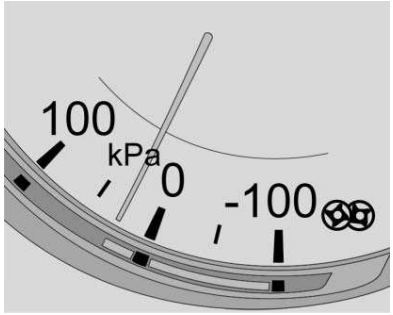

Metric 6.2 engine (LT4) shown, 3.6L engine (LF3) similar

4502348

Cadillac CTS/CTS-V Owner Manual (GMNA-Localizing-U.S./Canada-2ndPrint-11254870) - 2017 - Final Review - 6/14/16

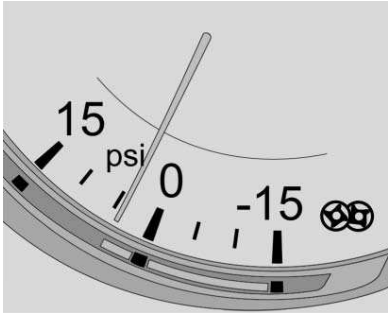

English 6.2 engine (LT4) shown, 3.6L engine (LF3) similar

4502349

This gauge indicates boost under heavier throttle.

It displays the air pressure level in the intake manifold before it enters the engine's combustion chamber.

The gauge is automatically centered at zero every time the engine is started. Actual boost is displayed from this zero point. Changes in ambient pressure, such as driving in mountains and changing weather, will slightly change the zero reading.

Engine Oil Temperature Gauge (Performance Configuration Only)

Object-ID=4165796 Owner=Owens, Lynnette LMD=07-Oct-2015 LMB=Clark, Lorien

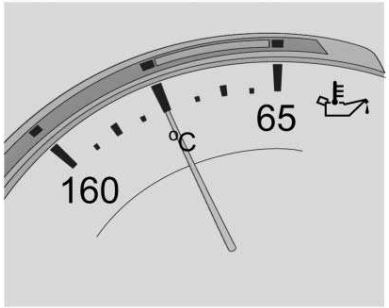

Metric

4170226

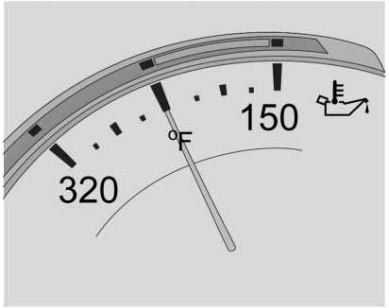

English

4165774

This gauge shows the engine oil temperature.

If the gauge pointer moves into the high end, it means that the engine oil has overheated. If the vehicle has been operated under normal driving conditions, pull off the road, stop the vehicle, and turn off the engine as soon as possible.

See *Engine Oil* ⇨ *288*.

Engine Coolant Temperature Gauge

Object-ID=4086812 Owner=Owens, Lynnette
LMD=17-Mar-2016 LMB=Owens, Lynnette

Metric Base Level

2653933

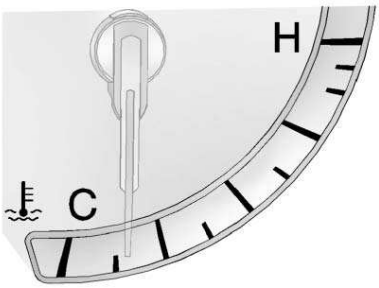

English Base Level

2653932

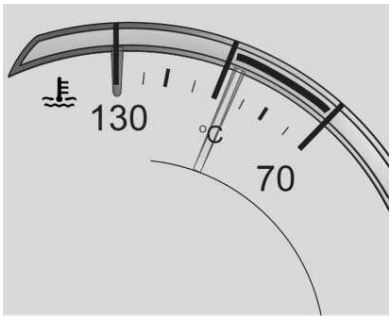

Metric Uplevel Balanced Configuration

4168871

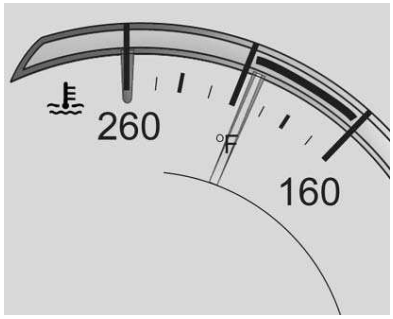

English Uplevel Balanced Configuration

4086692

This gauge measures the temperature of the vehicle's engine.

While driving under normal operating conditions, if the needle moves into the red area, the engine is too hot. Pull off the road, stop the vehicle, and turn off the engine as soon as possible.

Cadillac CTS/CTS-V Owner Manual (GMNA-Localizing-U.S./Canada-2ndPrint-11254870) - 2017 - Final Review - 6/14/16

Safety Belt Reminders

Object-ID=2710624 Owner=Owens, Lynnette
LMD=07-Oct-2015 LMB=Clark, Lorien

Driver Safety Belt Reminder Light

There is a driver safety belt reminder light on the instrument cluster.

1971490

When the vehicle is started, this light flashes and a chime may come on to remind the driver to fasten their safety belt. Then the light stays on solid until the belt is buckled. This cycle may continue several times if the driver remains or becomes unbuckled while the vehicle is moving.

If the driver safety belt is buckled, neither the light nor the chime comes on.

Passenger Safety Belt Reminder Light

There is a passenger safety belt reminder light near the passenger airbag status indicator. See *Passenger Sensing System* ⇨ *83*.

1971462

When the vehicle is started, this light flashes and a chime may come on to remind passengers to fasten their safety belt. Then the light stays on solid until the belt is buckled. This cycle continues several times if the passenger remains or becomes unbuckled while the vehicle is moving.

If the passenger safety belt is buckled, neither the chime nor the light comes on.

The front passenger safety belt reminder light and chime may turn on if an object is put on the seat such as a briefcase, handbag, grocery bag, laptop, or other electronic device. To turn off the reminder light and/or chime, remove the object from the seat or buckle the safety belt.

Airbag Readiness Light

Object-ID=2736645 Owner=Owens, Lynnette
LMD=07-Oct-2015 LMB=Clark, Lorien

This light shows if there is an electrical problem with the airbag system. The system check includes the airbag sensor(s), the passenger sensing system, the pretensioners, the airbag modules, the wiring, and the crash sensing and diagnostic module. For more information on the airbag system, see *Airbag System* ⇨ *77*.

1971498

The airbag readiness light comes on for several seconds when the vehicle is started. If the light does not come on then, have it fixed immediately.

⚠ Warning

Object-ID=2207945 LMD=10-Nov-2008

If the airbag readiness light stays on after the vehicle is started or comes on while driving, it means the airbag system might not be working properly. The airbags in the vehicle might not inflate in a crash, or they could even inflate without a crash. To help avoid injury, have the vehicle serviced right away.

If there is a problem with the airbag system, a Driver Information Center (DIC) message may also come on. See *Airbag System Messages* ⇨ *156*.

Passenger Airbag Status Indicator

Object-ID=2756964 Owner=Foster, Cindi LMD=26-Jan-2016 LMB=Clark, Lorien

The vehicle has a passenger sensing system. See *Passenger Sensing System* ⇨ *83* for important safety information. The passenger airbag status indicator is in the overhead console.

United States

2920323

Canada and Mexico

2048776

When the vehicle is started, the passenger airbag status indicator will light ON and OFF, or the symbol for on and off for several seconds as a system check. Then, after several more seconds, the status indicator will light either ON or OFF, or the on or off symbol to let you know the status of the front outboard passenger frontal airbag and knee airbag.

If the word ON or the on symbol is lit on the passenger airbag status indicator, it means that the front outboard passenger frontal airbag and knee airbag are allowed to inflate.

If the word OFF or the off symbol is lit on the airbag status indicator, it means that the passenger sensing system has turned off the front outboard passenger frontal airbag and knee airbag.

If, after several seconds, both status indicator lights remain on, or if there are no lights at all, there may be a problem with the lights or the passenger sensing system. See your dealer for service.

⚠ Warning

Object-ID=2210164 LMD=03-Sep-2013

If the airbag readiness light ever comes on and stays on, it means that something may be wrong with the airbag system. To help avoid injury to yourself or others, have the vehicle serviced right away. See

(Continued)

Warning (Continued)

Object-ID=2210164 LMD=03-Sep-2013

Airbag Readiness Light ⇨ *129* for more information, including important safety information.

Charging System Light

Object-ID=2739016 Owner=Owens, Lynnette LMD=07-Oct-2015 LMB=Clark, Lorien

1972013

On some vehicles the charging system light comes on briefly when the ignition is turned on, but the engine is not running, as a check to show the light is working. It should go out when the engine is started. For vehicles with a reconfigurable cluster, this light may not come on when the ignition is turned on.

If the light stays on, or comes on while driving, there may be a problem with the electrical charging system. Have it checked by your dealer. Driving while this light is on could drain the battery.

When this light comes on, or is flashing, the Driver Information Center (DIC) also displays a message.

See *Battery Voltage and Charging Messages* ⇨ *147*.

If a short distance must be driven with the light on, be sure to turn off all accessories, such as the radio and air conditioner.

Malfunction Indicator Lamp (Check Engine Light)

Object-ID=4017497 Owner=Owens, Lynnette LMD=07-Oct-2015 LMB=Clark, Lorien

This light is part of the vehicle's emission control on-board diagnostic system. If this light is on while the engine is running, a malfunction has been detected and the vehicle may require service. The light should come on to show that it is working when the ignition is in Service Only Mode. See *Ignition Positions* ⇨ *216*.

1966759

Malfunctions are often indicated by the system before any problem is noticeable. Being aware of the light and seeking service promptly when it comes on may prevent damage.

Caution

Object-ID=4011553 LMD=11-Nov-2014

If the vehicle is driven continually with this light on, the emission control system may not work as well, the fuel economy may be lower, and the vehicle may not run smoothly. This could lead to costly repairs that might not be covered by the vehicle warranty.

Caution

Object-ID=4011554 LMD=11-Nov-2014

Modifications to the engine, transmission, exhaust, intake, or fuel system, or the use of replacement tires that do not meet the original tire specifications, can cause this light to come on. This could lead to costly repairs not covered by the vehicle warranty. This could also affect the vehicle's ability to pass an Emissions Inspection/Maintenance test. See *Accessories and Modifications* ⇨ *279*.

If the light is flashing : A malfunction has been detected that could damage the emission control system and increase vehicle emissions. Diagnosis and service may be required.

To help prevent damage, reduce vehicle speed and avoid hard accelerations and uphill grades. If towing a trailer, reduce the amount of cargo being hauled as soon as possible.

If the light continues to flash, find a safe place to park. Turn the vehicle off and wait at least 10 seconds before restarting the engine. If the light is still flashing, follow the previous guidelines and see your dealer for service as soon as possible.

If the light is on steady : A malfunction has been detected. Diagnosis and service may be required.

Check the following:

- If fuel has been added to the vehicle using the capless funnel adapter, make sure that it has been removed. See "Filling the Tank with a Portable Gas Can" under *Filling the Tank* ⇨ *269*. The diagnostic system can detect if the adapter has been left installed in the vehicle, allowing fuel to evaporate into the atmosphere. A few driving trips with the adapter removed may turn off the light.
- Poor fuel quality can cause inefficient engine operation and poor driveability, which may go away once the engine is warmed up. If this occurs, change the fuel brand. It may require at least one full tank of the proper fuel to turn the light off. See *Fuel* ⇨ *267*.

If the light remains on, see your dealer.

Emissions Inspection and Maintenance Programs

If the vehicle requires an Emissions Inspection/Maintenance test, the test equipment will likely connect to the vehicle's Data Link Connector (DLC).

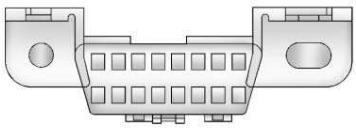

2367064

The DLC is under the instrument panel to the left of the steering wheel. Connecting devices that are not used to perform an Emissions Inspection/Maintenance test or to service the vehicle may affect vehicle operation. See *Add-On Electrical Equipment* ⇨ *276*. See your dealer if assistance is needed.

The vehicle may not pass inspection if:

- The light is on when the engine is running.
- The light does not come on when the ignition is in Service Only Mode.
- Critical emission control systems have not been completely diagnosed. If this happens, the vehicle would not be ready for inspection and might require several days of routine driving before the system is ready for inspection. This can happen if the 12-volt battery has recently been replaced or run down, or if the vehicle has been recently serviced.

See your dealer if the vehicle will not pass or cannot be made ready for the test.

Brake System Warning Light

Object-ID=2555612 Owner=Owens, Lynnette LMD=07-Oct-2015 LMB=Clark, Lorien

The vehicle brake system consists of two hydraulic circuits. If one circuit is not working, the remaining circuit can still work to stop the vehicle. For normal braking performance, both circuits need to be working.

If the warning light comes on, there is a brake problem. Have the brake system inspected right away.

BRAKE

Metric 1971995 English 1971998

This light should come on briefly when the engine is started. If it does not come on then, have it fixed so it will be ready to warn you if there is a problem.

If the light comes on and stays on, there is a brake problem.

⚠ Warning

Object-ID=2489740 LMD=11-Jun-2010

The brake system might not be working properly if the brake system warning light is on. Driving with the brake system warning light on can lead to a crash. If the light is still on after the vehicle has been pulled off the road and carefully stopped, have the vehicle towed for service.

Parking Brake Light

Object-ID=2710737 Owner=Owens, Lynnette LMD=07-Oct-2015 LMB=Clark, Lorien

PARK

Metric 2198084 English 2187900

This light comes on when the parking brake is applied. If the light continues flashing after the parking brake is released, or while driving, there is a

problem with the Electric Parking Brake system or another system. A message may also display in the Driver Information Center (DIC). See *Brake System Messages* ⇨ *147*.

If the light does not come on, or remains flashing, see your dealer.

Service Electric Parking Brake Light

Object-ID=2739019 Owner=Owens, Lynnette LMD=04-Nov-2015 LMB=Owens, Lynnette

2161095

On some vehicles the service electric parking brake light should come on briefly when the vehicle is in ON/RUN. If it does not come on, have it fixed so it will be ready to warn if there is a problem. For vehicles with the reconfigurable cluster, this light may not come on when the vehicle is in ON/RUN.

If this light stays on, the vehicle should be taken to a dealer as soon as possible. See *Electric Parking Brake* ⇨ *228*. If a message displays in the Driver Information Center (DIC), see *Brake System Messages* ⇨ *147*.

Antilock Brake System (ABS) Warning Light

Object-ID=2155010 Owner=Owens, Lynnette LMD=07-Oct-2015 LMB=Clark, Lorien

2040830

This light comes on briefly when the engine is started.

If the light does not come on, have it fixed so it will be ready to warn if there is a problem.

If the light comes on while driving, stop as soon as it is safely possible and turn off the vehicle. Then start the engine again to reset the system. If the ABS light stays on, or comes on again while driving, the vehicle needs service. A chime may also sound when the light comes on steady.

If the ABS light is the only light on, the vehicle has regular brakes, but the antilock brakes are not functioning.

If both the ABS and the brake system warning light are on, the vehicle's antilock brakes are not functioning and there is a problem with the regular brakes. See your dealer for service.

See *Brake System Warning Light* ⇨ *133* and *Brake System Messages* ⇨ *147*.

Lane Keep Assist (LKA) Light

Object-ID=3817061 Owner=Owens, Lynnette LMD=07-Oct-2015 LMB=Clark, Lorien

3683601

For some vehicles, this light comes on briefly while starting the vehicle. If it does not come on, have the vehicle serviced.

For vehicles with the uplevel cluster, this light may not come on when starting the vehicle.

This light is green if LKA is available to assist.

LKA may assist by gently turning the steering wheel if the vehicle approaches a detected lane marking without using the turn signal in that direction. The LKA light will turn amber.

This light is amber and flashes as a Lane Departure Warning (LDW) alert, to indicate that the lane marking has been crossed.

See *Lane Keep Assist (LKA)* ⇨ *263*.

Vehicle Ahead Indicator

Object-ID=2966258 Owner=Owens, Lynnette LMD=07-Oct-2015 LMB=Clark, Lorien

2625124

If equipped, this indicator will display green when a vehicle is detected ahead and amber when you are following a vehicle ahead much too closely.

See *Forward Collision Alert (FCA) System* ⇨ *257*.

Traction Off Light

Object-ID=3217370 Owner=Owens, Lynnette LMD=07-Oct-2015 LMB=Clark, Lorien

2153969

This light comes on briefly while starting the engine. If it does not, have the vehicle serviced by your dealer. If the system is working normally, the indicator light then turns off. For vehicles with a reconfigurable cluster, this light is in the display area and it may not come on when the ignition is turned on.

The traction off light comes on when the Traction Control System (TCS) has been turned off by pressing and releasing the TCS/StabiliTrak button.

This light and the StabiliTrak OFF light come on when StabiliTrak is turned off.

If the TCS is off, wheel spin is not limited. Adjust driving accordingly.

See *Traction Control/Electronic Stability Control* ⇨ *230*.

StabiliTrak® OFF Light

Object-ID=2867182 Owner=Owens, Lynnette
LMD=07-Oct-2015 LMB=Clark, Lorien

2040862

This light comes on briefly while starting the engine. If it does not, have the vehicle serviced by your dealer.

This light comes on when the StabiliTrak system is turned off. If StabiliTrak is off, the Traction Control System (TCS) is also off.

If StabiliTrak and TCS are off, the system does not assist in controlling the vehicle. Turn on the TCS and the StabiliTrak systems, and the warning light turns off.

See *Traction Control/Electronic Stability Control* ⇨ *230*.

Traction Control System (TCS)/StabiliTrak® Light

Object-ID=2867184 Owner=Owens, Lynnette
LMD=11-Nov-2015 LMB=Owens, Lynnette

1991282

This light comes on briefly when the engine is started.

If the light does not come on, have the vehicle serviced by your dealer. If the system is working normally, the indicator light turns off.

If the light is on and not flashing, the TCS and potentially the StabiliTrak system have been disabled. A Driver Information Center (DIC) message may display. Check the DIC messages to determine which feature(s) is no longer functioning and whether the vehicle requires service. See *Ride Control System Messages* ⇨ *154*.

If the light is on and flashing, the TCS and/or the StabiliTrak system is actively working.

See *Traction Control/Electronic Stability Control* ⇨ *230*.

Engine Coolant Temperature Warning Light

Object-ID=2910842 Owner=Owens, Lynnette
LMD=07-Oct-2015 LMB=Clark, Lorien

1971507

On some vehicles this light comes on briefly while starting the vehicle. If it does not, have the vehicle serviced by the dealer. If the system is working normally the indicator light goes off. For vehicles with the reconfigurable cluster, this light may not come on when starting the vehicle.

Caution

Object-ID=2890307 LMD=19-Jul-2012

The engine coolant temperature warning light indicates that the vehicle has overheated. Driving with this light on can damage the engine and it may not be covered by the vehicle warranty. See *Engine Overheating* ⇨ *299*.

The engine coolant temperature warning light comes on when the engine has overheated.

If this happens pull over and turn off the engine as soon as possible. See *Engine Overheating* ⇨ *299*.

Tire Pressure Light

Object-ID=2364840 Owner=Owens, Lynnette LMD=07-Oct-2015 LMB=Clark, Lorien

1970731

For vehicles with the Tire Pressure Monitor System (TPMS), this light comes on briefly when the engine is started. It provides information about tire pressures and the TPMS.

When the Light Is On Steady

This indicates that one or more of the tires are significantly underinflated.

A Driver Information Center (DIC) tire pressure message may also display. See *Tire Messages* ⇨ *157*. Stop as soon as possible, and inflate the tires to the pressure value shown on the Tire and Loading Information label. See *Tire Pressure* ⇨ *325*.

When the Light Flashes First and Then Is On Steady

If the light flashes for about a minute and then stays on, there may be a problem with the TPMS. If the problem is not corrected, the light will come on at every ignition cycle. See *Tire Pressure Monitor Operation* ⇨ *328*.

Engine Oil Pressure Light

Object-ID=2867187 Owner=Owens, Lynnette LMD=07-Oct-2015 LMB=Clark, Lorien

Caution

Object-ID=2867132 LMD=05-Jun-2012

Lack of proper engine oil maintenance can damage the engine. Driving with the engine oil low can also damage the engine. The repairs would not be covered by the vehicle warranty. Check the oil level as soon as possible. Add oil if required, but if the oil level is within the operating range and the oil pressure is still low, have the vehicle serviced. Always follow the maintenance schedule for changing engine oil.

1971524

This light should come on briefly as the engine is started. If it does not come on, have the vehicle serviced by your dealer.

If the light comes on and stays on, it means that oil is not flowing through the engine properly. The vehicle could be low on oil and might have some other system problem. See your dealer.

Low Fuel Warning Light

Object-ID=2744630 Owner=Owens, Lynnette
LMD=07-Oct-2015 LMB=Clark, Lorien

2241360

This light is near the fuel gauge and comes on briefly when the ignition is turned on as a check to show it is working. For vehicles with a reconfigurable cluster, this light is in the display area and may not come on when the ignition is turned on.

It also comes on when the fuel tank is low on fuel. The light turns off when fuel is added. If it does not, have the vehicle serviced.

Auto Stop Mode (Uplevel Cluster Only)

Object-ID=4165793 Owner=Owens, Lynnette
LMD=07-Oct-2015 LMB=Clark, Lorien

4165756

This light comes on when the engine is in an Auto Stop.

See *Starting the Engine* ⇨ *217*.

Security Light

Object-ID=2739027 Owner=Owens, Lynnette
LMD=07-Oct-2015 LMB=Clark, Lorien

2326622

On some vehicles the immobilizer light should come on briefly as the engine is started. If it does not come on, have the vehicle serviced by your dealer. If the system is working normally, the indicator light turns off. For vehicles with the reconfigurable cluster, this light may not come on when the engine is started.

If the light stays on and the engine does not start, there could be a problem with the theft-deterrent system. See *Immobilizer Operation* ⇨ *47*.

Cadillac CTS/CTS-V Owner Manual (GMNA-Localizing-U.S./Canada-2ndPrint-11254870) - 2017 - Final Review - 6/14/16

High-Beam On Light

Object-ID=2710835 Owner=Owens, Lynnette
LMD=07-Oct-2015 LMB=Clark, Lorien

2065302

This light comes on when the high-beam headlamps are in use.

See *Headlamp High/Low-Beam Changer* ⇨ *171*.

IntelliBeam® Light

2164850

This light comes on when the IntelliBeam system, if equipped, is enabled.

See *Exterior Lamp Controls* ⇨ *169*.

Adaptive Forward Lighting (AFL) Light

Object-ID=2744631 Owner=Owens, Lynnette
LMD=07-Oct-2015 LMB=Clark, Lorien

2531116

This light should come on briefly as the vehicle is started. If it does not come on, have the vehicle serviced by your dealer. For vehicles with a reconfigurable cluster, this light is in the display area and may not come on when the ignition is turned on.

This light comes on solid when there is a problem with the AFL system. It flashes when the system is switching between lighting modes. See *Adaptive Forward Lighting (AFL)* ⇨ *173*.

Lamps On Reminder

Object-ID=2404941 Owner=Owens, Lynnette
LMD=07-Oct-2015 LMB=Clark, Lorien

2029885

This light comes on when the exterior lamps are in use. See *Exterior Lamp Controls* ⇨ *169*.

Cruise Control Light

Object-ID=2710838 Owner=Owens, Lynnette
LMD=07-Oct-2015 LMB=Clark, Lorien

1971514

The cruise control light is white when the cruise control is on and ready, and turns green when the cruise control is set and active.

See *Cruise Control* ⇨ *238*.

Adaptive Cruise Control Light

2735251

This light is white when the Adaptive Cruise Control (ACC, if equipped) is on and ready, and turns green when the ACC is set and active. See *Adaptive Cruise Control* ⇨ *240*.

Door Ajar Light

Object-ID=2891103 Owner=Owens, Lynnette
LMD=07-Oct-2015 LMB=Clark, Lorien

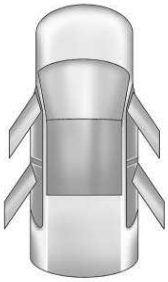

2289346

For vehicles equipped with this light, it comes on when a door is open or not securely latched. Before driving, check that all doors are properly closed. See *Door Ajar Messages* ⇨ *149* for more information.

Information Displays

Driver Information Center (DIC)

Object-ID=4504416 Owner=Owens, Lynnette
LMD=27-Apr-2016 LMB=Owens, Lynnette

The DIC displays are shown in the left and right interactive display zones on the instrument cluster. The displays show the status of many vehicle systems. The controls for the DIC are on the right steering wheel control.

2852090

∧ or ∨ : Press to move up or down in a list.

< or > : Press to move between the interactive display zones in the cluster. Press < to go back to the previous menu.

SEL : Press to open a menu or select a menu item. Press and hold to reset values on certain screens.

DIC Information Display Options

The information displays on the DIC can be turned on or off through the Options menu.

1. Press SEL while viewing the Options page in the center display zone on the cluster.
2. Scroll to Info Pages and press SEL.
3. Press ∧ or ∨ to move through the list of possible information displays.
4. Press SEL while an item is highlighted to select or deselect that item. When an item is selected, a checkmark will appear next to it.

DIC Information Displays

The following is the list of all possible DIC information displays. Some of the information displays may not be available for your particular vehicle.

Speed : Shows the vehicle speed in either kilometers per hour (km/h) or miles per hour (mph).

Trip 1 and Trip 2 (Base Cluster) / Trip 1 or Trip 2 and Average Fuel Economy (Uplevel Cluster) : Shows the current distance traveled, in either kilometers (km) or miles (mi), since the trip odometer was last reset. The trip odometer can be reset by pressing and holding SEL while this display is active.

The average fuel economy shows the approximate average liters per 100 kilometers (L/100 km) or miles per gallon (mpg). This number is calculated based on the number of L/100 km (mpg) recorded since the last time this menu item was reset. This number reflects only the approximate average fuel economy that the vehicle has right now, and will change as driving conditions change. The Average Fuel Economy can be reset along with the trip odometer by pressing and holding SEL while this display is active.

Fuel Range : Shows the approximate distance the vehicle can be driven without refueling. LOW will be displayed when the vehicle is low on fuel. The fuel range estimate is based on an average of the vehicle's fuel economy over recent driving history and the amount of fuel remaining in the fuel tank.

Average Fuel Economy (Base Cluster) : Shows the approximate average liters per 100 kilometers (L/100 km) or miles per gallon (mpg). This number is calculated based on the number of L/100 km (mpg) recorded since the last time this menu item was reset. This number reflects only the approximate average fuel economy that the vehicle has right now, and will change as driving conditions change. The Average Fuel Economy can be reset by pressing and holding SEL while this display is active.

Instantaneous Fuel Economy : Shows the current fuel economy in either liters per 100 kilometers (L/100 km) or miles per gallon (mpg). This number reflects only the approximate fuel economy that the vehicle has right now and changes frequently as driving conditions change.

Average Speed : Shows the average speed of the vehicle in kilometers per hour (km/h) or miles per hour (mph). This average is calculated based on the various vehicle speeds recorded since the last reset of this value. The average speed can be reset by pressing and holding SEL while this display is active.

Timer : This display can be used as a timer. To start the timer, press SEL while this display is active. The display will show the amount of time that has passed since the timer was last reset. To stop the timer, press SEL briefly while this display is active and the timer is running. To reset the timer to zero, press and hold SEL while this display is active.

Compass (Base Cluster) : On some vehicles, shows the direction the vehicle is driving.

Turn Arrow : Shows the next maneuver when using route guidance.

Estimated Time to Arrival : Shows the estimated time until arrival at your destination.

Distance to Destination : Shows the distance to the destination when using route guidance.

Speed Limit : Shows the current speed limit on vehicles with the navigation system. The information for this page comes from a roadway database.

Speed Warning : Allows the driver to set a speed that they do not want to exceed. To set the Speed Warning, press SEL when Speed Warning is displayed. Press ∧ or ∨ to adjust the value. This feature can be turned off by pressing and holding SEL while viewing this page. If the selected speed limit is exceeded, a pop-up warning is displayed and a chime may sound.

Best Fuel Economy : Displays average fuel economy, the best fuel economy over the selected distance, and a bar graph showing instantaneous fuel economy.

Performance Timer (CTS-V Only) : Shows the last performance time recorded. Press and hold SEL while viewing the performance timer to reset and stop the timer. Press SEL to enter the performance timer menu. In the menu, set the start speed, set the end speed, and reset the timer.

Cruise Set Speed : Shows the speed the cruise control or Adaptive Cruise Control (ACC, if equipped) is set to.

Following Distance Indicator : When Adaptive Cruise Control (ACC) is not engaged, the current follow time to the vehicle ahead is displayed as a time value on this page. When ACC has been engaged, the display switches to the gap setting page. This page shows the current gap setting along with the vehicle ahead telltale.

Gap Setting : When ACC has been engaged, this page shows the current gap setting along with the vehicle ahead telltale.

Battery Voltage : Shows the current battery voltage.

Engine Boost : Shows the current amount of boost being added.

Oil Life : Shows an estimate of the oil's remaining useful life.
If REMAINING OIL LIFE 99% is displayed, that means 99% of the current oil life remains.

When the remaining oil life is low, the CHANGE ENGINE OIL SOON message will appear on the display. See *Engine Oil Messages* ⇨ *149*. The oil should be changed as soon as possible. See *Engine Oil* ⇨ *288*. In addition to the engine oil life system monitoring the oil life, additional maintenance is recommended in the Maintenance Schedule. See *Maintenance Schedule* ⇨ *364*.

The Oil Life display must be reset after each oil change. It will not reset itself. Do not to reset the Oil Life display accidentally at any time other than when the oil has just been changed. It cannot be reset accurately until the next oil change. To reset the engine oil life system, press and hold SEL for several seconds while the Oil Life display is active. See *Engine Oil Life System* ⇨ *291*.

Tire Pressure : Shows the approximate pressures of all four tires. Tire pressure is displayed in either kilopascal (kPa) or in pounds per square inch (psi). If the pressure is low, the value for that tire is shown in amber. See *Tire Pressure Monitor System* ⇨ *327* and *Tire Pressure Monitor Operation* ⇨ *328*.

Vehicle Odometer (Base Cluster) : Shows the odometer.

Blank Page : The Blank Page display allows for no information to be displayed in the DIC display zone(s).

Head-Up Display (HUD)

Object-ID=4514954 Owner=Parker, Cynthia
LMD=11-May-2016 LMB=Parker, Cynthia

⚠ Warning

Object-ID=2208414 LMD=11-Nov-2008

If the HUD image is too bright or too high in your field of view, it may take you more time to see things you need to see when it is dark outside. Be sure to keep the HUD image dim and placed low in your field of view.

If equipped with HUD, some information concerning the operation of the vehicle is projected onto the windshield. The image is projected through the HUD lens on top of the instrument panel. The information appears as an image focused out toward the front of the vehicle.

Caution

Object-ID=3222275 LMD=03-Dec-2012

If you try to use the HUD image as a parking aid, you may misjudge the distance and damage your vehicle. Do not use the HUD image as a parking aid.

The HUD information can be displayed in various languages in some vehicles. The speedometer reading and other numerical values can be displayed in either English or metric units.

The language selection is changed through the radio and the units of measurement is changed through the instrument cluster. See *Vehicle Personalization* ⇨ *158* and "Cluster Settings Menu" under *Instrument Cluster* ⇨ *120*.

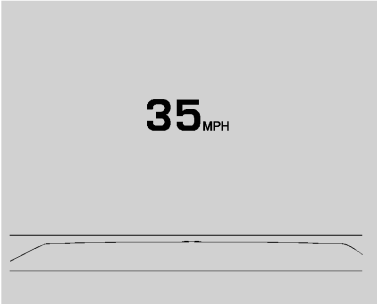

HUD Display on the Vehicle Windshield

2717206

The HUD may display some of the following vehicle information and vehicle messages or alerts:

- Speed
- Tachometer
- Audio
- Phone
- Navigation
- Collision Alert
- Cruise Control
- Lane Keep Assist
- Low Fuel

Some vehicle messages or alerts displayed in the HUD may be cleared by using the steering wheel controls. See *Vehicle Messages* ⇨ *147*.

3448519

The HUD control is to the left of the steering wheel.

To adjust the HUD image:

1. Adjust the driver seat.
2. Start the engine.
3. Use the following settings to adjust the HUD.

HUD **:** Press down or lift up to center the HUD image. The HUD image can only be adjusted up and down, not side to side.

Cadillac CTS/CTS-V Owner Manual (GMNA-Localizing-U.S./Canada-2ndPrint-11254870) - 2017 - Final Review - 6/14/16

INFO **:** Press to select the display view. Each press will change the display view.

±☼ **:** Lift up and hold to brighten the display. Press down and hold to dim the display. Hold down to turn the display off.

The HUD image will automatically dim and brighten to compensate for outside lighting. The HUD brightness control can also be adjusted as needed.

The HUD image can temporarily light up depending on the angle and position of the sunlight on the HUD display. This is normal.

Polarized sunglasses could make the HUD image harder to see.

Head-Up Display (HUD) Rotation Option

This feature allows for adjusting the angle of the HUD image.

Press SEL on the steering wheel controls while Head-up Display Rotation is highlighted to enter Adjust Mode. Press ∧ or ∨ to adjust the angle of the HUD display. Press < or > to highlight OK, then press SEL to save the setting. CANCEL can also be selected to cancel the setting. The vehicle must be in P (Park). See *Instrument Cluster* ⇨ *120*.

HUD Views

There are four views in the HUD. Some vehicle information and vehicle messages or alerts may be displayed in any view.

Metric

2833180

English

2708334

Speed View : This display gives the speedometer reading (in English or metric units), speed limit, Adaptive Cruise Control speed, Lane Departure Warning, and Vehicle Ahead indicator. Some information only appears on vehicles that have these features, and when they are active.

Metric

2833181

English

2708337

Audio/Phone View : This displays the speed view along with audio/phone information. The current radio station, media type, and incoming calls will be displayed.

All HUD views may briefly display audio information when the driver uses the steering wheel controls to adjust the audio settings appearing in the instrument cluster.

Incoming phone calls appearing in the instrument cluster, may also display in any HUD view.

Metric

2833182

English

2708342

Navigation View : This display includes the information in the speed view along with Turn-by-Turn Navigation information in some vehicles. When navigation routing is not active “No Route Active” is displayed.

Navigation Turn-by-Turn Alerts shown in the instrument cluster may also be displayed in any HUD view.

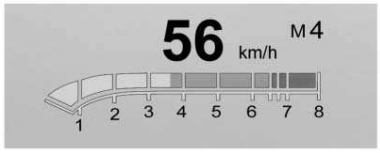

Metric

2833184

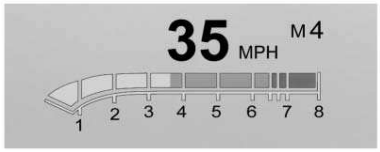

English

2850764

Performance View : This displays the speedometer reading, rpm reading, transmission positions, and gear shift indicator.

Care of the HUD

Clean the inside of the windshield to remove any dirt or film that could reduce the sharpness or clarity of the HUD image.

Clean the HUD lens with a soft cloth sprayed with glass cleaner. Wipe the lens gently, then dry it.

HUD Troubleshooting

Check that:

- Nothing is covering the HUD lens.
- HUD brightness setting is not too dim or too bright.
- HUD is adjusted to the proper height.
- Polarized sunglasses are not worn.
- Windshield and HUD lens are clean.

If the HUD image is not correct, contact your dealer.

The windshield is part of the HUD system. If the windshield needs replacing, see *CELL Link Error - Link target cell (cell ID 183280) is invalid for this publication.* ⇨ #.

Cadillac CTS/CTS-V Owner Manual (GMNA-Localizing-U.S./Canada-2ndPrint-11254870) - 2017 - Final Review - 6/14/16

Vehicle Messages

Object-ID=2719091 Owner=Owens, Lynnette LMD=07-Oct-2015 LMB=Clark, Lorien

Messages displayed on the DIC indicate the status of the vehicle or some action that may be needed to correct a condition. Multiple messages may display one after the other.

The messages that do not require immediate action can be acknowledged and cleared by pressing SEL. The messages that require immediate action cannot be cleared until that action is performed. All messages should be taken seriously and clearing the messages does not correct the problem.

The following are some of the vehicle messages that may be displayed depending on the vehicle content.

Battery Voltage and Charging Messages

Object-ID=4062387 Owner=Owens, Lynnette LMD=07-Oct-2015 LMB=Clark, Lorien

BATTERY SAVER ACTIVE

This message displays when the vehicle has detected that the battery voltage is dropping beyond a reasonable point. The battery saver system starts reducing features of the vehicle that may be noticed. At the point that features are disabled, this message displays. Turn off unnecessary accessories to allow the battery to recharge.

LOW BATTERY

This message is displayed when the battery voltage is low. See *Battery - North America* ⇨ *303*.

SERVICE BATTERY CHARGING SYSTEM

This message is displayed when there is a fault in the battery charging system. Take the vehicle to your dealer for service.

TRANSPORT MODE ON

This message is displayed when the vehicle is in transport mode. Some features can be disabled while in this mode, including Remote Keyless Entry (RKE), remote start, and the vehicle alarm system. Take the vehicle to your dealer for service to turn transport mode off.

Brake System Messages

Object-ID=2370564 Owner=Owens, Lynnette LMD=07-Oct-2015 LMB=Clark, Lorien

BRAKE FLUID LOW

This message displays when the brake fluid level is low. See *Brake Fluid* ⇨ *302*.

RELEASE PARKING BRAKE

This message displays if the Electric Parking Brake is on while the vehicle is in motion. Release it before attempting to drive. See *Electric Parking Brake* ⇨ *228*.

SERVICE BRAKE ASSIST

This message displays when there is a problem with the brake boost system. When this message displays, the brake pedal may be harder to push and the stopping distance may be longer. See your dealer for service.

SERVICE PARKING BRAKE

This message displays when there is a problem with the Electric Parking Brake. See your dealer for service.

STEP ON BRAKE TO RELEASE PARK BRAKE

This message displays when attempting to release the Electric Parking Brake without the brake pedal applied. See *Electric Parking Brake* ⇨ *228*.

Compass Messages

Object-ID=4142619 Owner=Owens, Lynnette LMD=07-Oct-2015 LMB=Clark, Lorien

The compass display will be blank if the vehicle temporarily loses communication with the Global Positioning System (GPS).

Cruise Control Messages

Object-ID=2739205 Owner=Owens, Lynnette LMD=10-Mar-2016 LMB=Owens, Lynnette

ADAPTIVE CRUISE SET TO XXX

This message displays when the Adaptive Cruise Control (ACC) speed is set. See *Adaptive Cruise Control* ⇨ *240*.

ADAPTIVE CRUISE TEMPORARILY UNAVAILABLE

This message displays when attempting to activate Adaptive Cruise Control (ACC) when it is temporarily unavailable. The ACC system does not need service.

This can occur under the following conditions:

- The radar is not clean. Keep the radar sensors free of mud, dirt, snow, ice, and slush. Clean the entire front and/or rear of the vehicle. For cleaning instructions, see *Exterior Care* ⇨ *353*.
- Heavy rain or snow is interfering with the radar object detection or camera performance.

CRUISE SET TO XXX

This message displays when the cruise control speed is set. See *Cruise Control* ⇨ *238*.

NO CRUISE BRAKING GAS PEDAL APPLIED

This message displays when Adaptive Cruise Control (ACC) is active and the driver is pressing the gas pedal. When this occurs, ACC will not brake. See *Adaptive Cruise Control* ⇨ *240*.

SERVICE ADAPTIVE CRUISE CONTROL

This message displays when the Adaptive Cruise Control (ACC) needs service. Take the vehicle to your dealer.

SHIFT TO PARK BEFORE EXITING

This message may display if Adaptive Cruise Control (ACC) is engaged holding the vehicle at a stop, and the driver attempts to exit the vehicle. Put the vehicle in P (Park) before exiting.

Cadillac CTS/CTS-V Owner Manual (GMNA-Localizing-U.S./Canada-2ndPrint-11254870) - 2017 - Final Review - 6/14/16

Door Ajar Messages

Object-ID=2719144 Owner=Owens, Lynnette
LMD=07-Oct-2015 LMB=Clark, Lorien

DOOR OPEN

A door open symbol will be displayed on the DIC showing which door is open. If the vehicle has been shifted out of P (Park), a DOOR OPEN message will also be displayed. The DOOR OPEN message may also be displayed if the vehicle starts to move. Close the door completely.

HOOD OPEN

This message will display along with a hood open symbol when the hood is open. A chime may also sound. Close the hood completely.

TRUNK OPEN

This message will display along with a symbol when the trunk is open. Close the trunk completely.

Engine Cooling System Messages

Object-ID=2827434 Owner=Owens, Lynnette
LMD=07-Oct-2015 LMB=Clark, Lorien

A/C OFF ENGINE COOLANT HOT

This message displays when the engine coolant becomes hotter than the normal operating temperature. To avoid added strain on a hot engine, the air conditioning compressor automatically turns off. When the coolant temperature returns to normal, the air conditioning compressor turns back on. The vehicle can continue to be driven.

If this message continues to appear, have the system repaired by your dealer as soon as possible to avoid damage to the engine.

ENGINE OVERHEATED — IDLE ENGINE

This message displays and a chime sounds when the engine coolant temperature is too hot. The engine coolant temperature warning light will also be on. Stop and allow the vehicle to idle until it cools down.

ENGINE OVERHEATED — TURN VEHICLE OFF

This message displays and a continuous chime sounds if the engine cooling system reaches unsafe temperatures for operation. The engine coolant temperature warning light will flash. Stop and turn off the vehicle as soon as it is safe to do so to avoid severe damage. This message clears when the engine has cooled to a safe operating temperature.

Engine Oil Messages

Object-ID=2768783 Owner=Owens, Lynnette
LMD=07-Oct-2015 LMB=Clark, Lorien

CHANGE ENGINE OIL SOON

This message displays when the engine oil needs to be changed. When you change the engine oil, be sure to reset the oil life system. See *Engine Oil Life System* ⇨ *291*, *Driver Information Center (DIC)* ⇨ *140*, *Engine Oil* ⇨ *288*, and *Maintenance Schedule* ⇨ *364*.

ENGINE OIL HOT, IDLE ENGINE

This message displays when the engine oil temperature is too hot. Stop and allow the vehicle to idle until it cools down.

ENGINE OIL LOW — ADD OIL

On some vehicles, this message displays when the engine oil level may be too low. Check the oil level before filling to the recommended level. If the oil is not low and this message remains on, take the vehicle to your dealer for service. See *Engine Oil* ⇨ *288*.

OIL PRESSURE LOW — STOP ENGINE

This message displays if low oil pressure levels occur. Stop the vehicle as soon as safely possible and do not operate it until the cause of the low oil pressure has been corrected. Check the oil as soon as possible and have the vehicle serviced by your dealer.

Engine Power Messages

Object-ID=2171924 Owner=Owens, Lynnette LMD=06-Nov-2015 LMB=Owens, Lynnette

ENGINE POWER IS REDUCED

This message displays when the vehicle's engine power is reduced. Reduced engine power can affect the vehicle's ability to accelerate. If this message is on, but there is no reduction in performance, proceed to your destination. The performance may be reduced the next time the vehicle is driven. The vehicle may be driven at a reduced speed while this message is on, but maximum acceleration and speed may be reduced. Anytime this message stays on, or displays repeatedly, the vehicle should be taken to your dealer for service as soon as possible.

Fuel System Messages

Object-ID=2739206 Owner=Owens, Lynnette LMD=08-Oct-2015 LMB=Clark, Lorien

FUEL LEVEL LOW

This message displays when the vehicle is low on fuel. Refuel as soon as possible.

Key and Lock Messages

Object-ID=2743906 Owner=Owens, Lynnette LMD=22-Oct-2015 LMB=Owens, Lynnette

NO REMOTE KEY WAS DETECTED PLACE KEY IN TRANSMITTER POCKET THEN START YOUR VEHICLE

This message displays when trying to start the vehicle if an RKE transmitter is not detected. The transmitter battery may be weak. See “Starting the Vehicle with a Low Transmitter Battery” under *Remote Keyless Entry (RKE) System Operation* ⇨ *32*.

NO REMOTE DETECTED

This message displays when the transmitter battery may be weak. See “Starting the Vehicle with a Low Transmitter Battery” under *Remote Keyless Entry (RKE) System Operation* ⇨ *32*.

NO REMOTE DETECTED PRESS BRAKE TO RESTART

This message displays when attempting to turn off the vehicle and the RKE transmitter is no longer detected. Restarting is allowed

Cadillac CTS/CTS-V Owner Manual (GMNA-Localizing-U.S./Canada-2ndPrint-11254870) - 2017 - Final Review - 6/14/16

without the RKE transmitter for five minutes. Press the brake pedal and ENGINE START/STOP to restart the vehicle.

NUMBER OF KEYS PROGRAMMED

This message displays when programming new keys to the vehicle.

REMOTE LEFT IN VEHICLE

This message displays when leaving the vehicle with the RKE transmitter still inside.

REPLACE BATTERY IN REMOTE KEY

This message displays when the battery in the RKE transmitter needs to be replaced.

Lamp Messages

Object-ID=2739207 Owner=Owens, Lynnette LMD=07-Oct-2015 LMB=Clark, Lorien

AFL (ADAPTIVE FORWARD LIGHTING) LAMPS NEED SERVICE

This message displays when the AFL system is disabled and needs service. See your dealer. See *Adaptive Forward Lighting (AFL)* ⇨ *173*.

AUTOMATIC LIGHT CONTROL ON/OFF

This message is displayed when the exterior lamp control is in AUTO and the lights have turned on or off. See *Automatic Headlamp System* ⇨ *172*.

XXX TURN INDICATOR FAILURE

When one of the turn signals is out, this message displays to show which bulb needs to be replaced. See *Bulb Replacement* ⇨ *307* and *Replacement Bulbs* ⇨ *308*.

TURN SIGNAL ON

This message is displayed if the turn signal has been left on. Turn off the turn signal.

Object Detection System Messages

Object-ID=4491560 Owner=Owens, Lynnette LMD=11-Apr-2016 LMB=Owens, Lynnette

24 GHz RADARS OFF

This message displays when driving in certain areas where there may be radar interference. Adaptive Cruise Control (ACC), Forward Collision Alert (FCA), and Forward Automatic Braking (FAB) may not work or may not work as well. The vehicle does not need service.

FORWARD COLLISION SYSTEM OFF

This message displays when Forward Automatic Braking (FAB) has been turned off. See *Forward Automatic Braking (FAB)* ⇨ *259*.

FORWARD COLLISION SYSTEM REDUCED

This message displays when Forward Automatic Braking (FAB) has been set to the Alert setting. This setting disables most FAB functions. See *Forward Automatic Braking (FAB)* ⇨ *259*.

FORWARD COLLISION SYSTEM UNAVAILABLE

This message displays when Forward Automatic Braking (FAB) has been unavailable for some time. FAB does not need service. This message can display under the following conditions:

- The front of the vehicle or windshield is not clean. Keep these areas clean and free of mud, dirt, snow, ice, and slush. For cleaning instructions, see *Exterior Care* ⇨ *353*.
- Heavy rain or snow is interfering with the object detection performance.

This message may also be displayed if there is a problem with the StabiliTrak system. See *Traction Control/Electronic Stability Control* ⇨ *230*.

FORWARD COLLISION ALERT OFF

This message displays when the Forward Collision Alert has been turned off.

FRONT CAMERA BLOCKED CLEAN WINDSHIELD

This message displays when the camera is blocked. Cleaning the outside of the windshield behind the rearview mirror may correct the issue. The Lane Keep Assist (LKA) and the Lane Departure Warning (LDW) system will not operate. Adaptive Cruise Control (ACC), Forward Collision Alert (FCA), and Forward Automatic Braking (FAB) may not work or may not work as well.

LANE CHANGE ALERT OFF

This message indicates that the driver has turned the Side Blind Zone Alert (SBZA) and Lane Change Alert (LCA) systems off.

LANE KEEPING ASSIST UNAVAILABLE

This message displays when the Lane Keep Assist (LKA) and Lane Departure Warning (LDW) system is temporarily unavailable. The LKA system does not need service.

This message could be due to the camera being blocked. Cleaning the outside of the windshield behind the rearview mirror may correct the issue.

REAR AUTO BRAKE/PARK ASSIST OFF

This message displays when the Parking Assist system has been turned off or when there is a temporary condition causing the system to be disabled.

REAR AUTO BRAKE AND PARK ASSIST UNAVAILABLE

This message displays when attempting to activate the parking and backing features of the Driver Assistance System when they are temporarily unavailable. The system does not need service.

This can occur under the following conditions:

- The radar is not clean. Keep the radar sensors free of mud, dirt, snow, ice, and slush. Clean the entire front and/or rear of the vehicle. For cleaning instructions, see *Exterior Care* ⇨ *353*.
- Heavy rain or snow is interfering with the radar object detection or camera performance.

See *Driver Assistance Systems* ⇨ *249*.

SERVICE FORWARD COLLISION SYSTEM

If this message displays, take the vehicle to your dealer to repair the system. Adaptive Cruise Control (ACC), Forward Collision Alert (FCA), and/or Forward Automatic Braking

(FAB) may not work. Do not use these systems until the vehicle has been repaired.

SERVICE DRIVER ASSIST SYSTEM

If this message displays, take the vehicle to your dealer to repair the system.

Adaptive Cruise Control (ACC), Forward Collision Alert (FCA), Forward Automatic Braking (FAB), Assistance Systems for Parking or Backing, and/or the Lane Keep Assist (LKA) system may not work. Do not use these systems until the vehicle has been repaired.

SERVICE FRONT CAMERA

If this message remains on after continued driving, take the vehicle to your dealer for service. Do not use the Lane Keep Assist (LKA), Lane Departure Warning (LDW), and Forward Collision Alert (FCA) features.

SERVICE PARK ASSIST

This message displays if there is a problem with the Parking Assist system. Do not use this system to help you park. See your dealer for service.

SERVICE REAR AUTO BRAKE AND PARK ASSIST

This message displays if there is a problem with the parking and backing features of the Driver Assistance System. Do not use this system to help park or back the vehicle. See your dealer for service.

SERVICE SIDE DETECTION SYSTEM

If this message remains on after continued driving, the vehicle needs service. Side Blind Zone Alert (SBZA), Lane Change Alert (LCA), and Rear Cross Traffic Alert (RCTA) features will not work. Take the vehicle to your dealer.

SIDE DETECTION SYSTEM UNAVAILABLE

This message indicates that Side Blind Zone Alert (SBZA), Lane Change Alert (LCA), and Rear Cross Traffic Alert (RCTA) are disabled either because the sensor is blocked and cannot detect vehicles in the blind zone, or the vehicle is passing through an open area, such as the desert, where there is insufficient data for operation. This message may also activate during heavy rain or due to road spray. The vehicle does not need service. For cleaning, see "Washing the Vehicle" under *Exterior Care* ⇨ *353*.

TAKE STEERING

If LKA does not detect active driver steering, an alert and chime may be provided. Move the steering wheel to dismiss. See *Lane Keep Assist (LKA)* ⇨ *263*.

Ride Control System Messages

Object-ID=4087591 Owner=Owens, Lynnette
LMD=07-Oct-2015 LMB=Clark, Lorien

ALL WHEEL DRIVE OFF

If the vehicle has the All-Wheel-Drive (AWD) system, this message displays when there is a temporary condition making the AWD system unavailable. The vehicle will run in 2WD. This could be caused by:

- Loss of wheel or vehicle speed
- AWD system overheat
- Certain vehicle electrical conditions

This message turns off when the above conditions are no longer present and the warning message is reset.

See *All-Wheel Drive* ⇨ *227*.

PERFORMANCE TRACTION 1 - WET (V-Series Only)

This message displays when this Performance Traction Management (PTM) mode is selected. The TCS and StabiliTrak OFF cluster lights will also be on when this mode is selected. Launch Control is available when this mode is selected. In this mode, the Traction Control and Active Handling System are available but intended for use on wet race track conditions. Adjust your driving accordingly. See "Performance Traction Management (V-Series Only)" under *Competitive Driving Mode* ⇨ *235*.

PERFORMANCE TRACTION 2 - DRY (V-Series Only)

This message displays when this Performance Traction Management (PTM) mode is selected. The TCS and StabiliTrak OFF cluster lights will also be on when this mode is selected. Launch Control is available when this mode is selected. In this mode, the Traction Control and Active Handling System are available but intended for use on dry race track conditions. Adjust your driving accordingly. See "Performance Traction Management (V-Series Only)" under *Competitive Driving Mode* ⇨ *235*.

PERFORMANCE TRACTION 3 - SPORT 1 (V-Series Only)

This message displays when this Performance Traction Management (PTM) mode is selected. The TCS and StabiliTrak OFF cluster lights will also be on when this mode is selected. Launch Control is available when this mode is selected. In this mode, the Traction Control and Active Handling System are available but intended for use on dry race track conditions. Adjust your driving accordingly. See "Performance Traction Management (V-Series Only)" under *Competitive Driving Mode* ⇨ *235*.

PERFORMANCE TRACTION 4 - SPORT 2 (V-Series Only)

This message displays when this Performance Traction Management (PTM) mode is selected. The TCS and StabiliTrak OFF cluster lights will also be on when this mode is selected. Launch Control is available when this mode is selected. In this mode, the Traction Control is available but intended for use on dry race track conditions. The Active Handling System is disabled when this mode is

selected. This mode will require more driver skill than modes 1–3. Adjust your driving accordingly. See "Performance Traction Management (V-Series Only)" under *Competitive Driving Mode* ⇨ *235*.

PERFORMANCE TRACTION 5 - RACE (V-Series Only)

This message displays when this Performance Traction Management (PTM) mode is selected. The TCS and StabiliTrak OFF cluster lights will also be on when this mode is selected. Launch Control is available when this mode is selected. In this mode, the Traction Control is available but intended for use on dry race track conditions. The Active Handling System is disabled when this mode is selected. This mode will require more driver skill than modes 1–4. Adjust your driving accordingly. See "Performance Traction Management (V-Series Only)" under *Competitive Driving Mode* ⇨ *235*.

REAR AXLE OFF

When this message is displayed, the vehicle's handling capabilities will be reduced during severe maneuvers. StabiliTrak will be affected. See *Traction Control/Electronic Stability Control* ⇨ *230*.

SERVICE ALL WHEEL DRIVE

This message displays if a problem occurs with the All-Wheel-Drive (AWD) system. The vehicle will run in 2WD. This could be caused by:

- An electronics problem
- Worn out or overheated clutch plates
- Various electrical issues

The system may need service. See your dealer.

SERVICE REAR AXLE

If there is a problem detected with the Electronic Limited-Slip Rear Axle, this message displays. When displayed, the system is not operational and driving should be adjusted accordingly. Take the vehicle to your dealer for service as soon as possible.

When this message is displayed, the vehicle's handling capabilities will be reduced during severe maneuvers. StabiliTrak will be affected. See *Traction Control/Electronic Stability Control* ⇨ *230*.

SERVICE STABILITRAK

This message displays if there is a problem with the StabiliTrak system. See *Traction Control/Electronic Stability Control* ⇨ *230*.

SERVICE SUSPENSION SYSTEM

This message displays when there is a problem with the Magnetic Ride Control system. See *Driver Mode Control* ⇨ *231*. Have the vehicle serviced by your dealer.

SERVICE TRACTION CONTROL

This message displays when there is a problem with the Traction Control System (TCS). See *Traction Control/ Electronic Stability Control* ⇨ *230*.

TRACTION CONTROL OFF

This message may display when the Traction Control System (TCS) has been turned off. See *Traction Control/ Electronic Stability Control* ⇨ *230*.

TRACTION CONTROL ON

This message may display when the Traction Control System (TCS) has been turned on. See *Traction Control/ Electronic Stability Control* ⇨ *230*.

Airbag System Messages

Object-ID=2210908 Owner=Owens, Lynnette LMD=06-Nov-2015 LMB=Owens, Lynnette

SERVICE AIRBAG

This message displays if there is a problem with the airbag system. See your dealer for service.

Safety Belt Messages

Object-ID=3255298 Owner=Owens, Lynnette LMD=07-Oct-2015 LMB=Clark, Lorien

AUTOMATIC SEATBELT TIGHTENING UNAVAILABLE

This message displays when the Automatic Safety Belt Tightening System, if equipped, becomes unavailable. This could be caused by a temporary condition. If the message continues to display, see your dealer.

SERVICE AUTOMATIC SEATBELT TIGHTENING SYSTEM

If this message displays, take the vehicle to your dealer to repair the Automatic Safety Belt Tightening System, if equipped.

Security Messages

Object-ID=2210879 Owner=Owens, Lynnette LMD=07-Oct-2015 LMB=Clark, Lorien

THEFT ATTEMPTED

This message displays if the vehicle detects a tamper condition.

Service Vehicle Messages

Object-ID=2442375 Owner=Owens, Lynnette LMD=07-Oct-2015 LMB=Clark, Lorien

SERVICE AC SYSTEM

This message displays if there is a problem with the air conditioning system. Take the vehicle to your dealer for service.

SERVICE POWER STEERING

This message displays and a chime may sound when there may be a problem with the power steering system. If this message displays and a reduction in steering performance or loss of power steering assistance is noticed, see your dealer.

SERVICE STEERING COLUMN LOCK

This message displays if there is a problem with the steering column lock. Take the vehicle to your dealer for service.

SERVICE VEHICLE SOON

This message displays if there is a problem with the vehicle. Take the vehicle to your dealer for service.

Cadillac CTS/CTS-V Owner Manual (GMNA-Localizing-U.S./Canada-2ndPrint-11254870) - 2017 - Final Review - 6/14/16

Starting the Vehicle Messages

Object-ID=2885243 Owner=Owens, Lynnette
LMD=07-Oct-2015 LMB=Clark, Lorien

PRESS BRAKE TO START

This message is displayed when attempting to start the vehicle without first pressing the brake pedal.

SERVICE KEYLESS START SYSTEM

This message is displayed if there is a problem with the pushbutton start system. Take the vehicle to your dealer for service.

TURN STEERING WHEEL START VEHICLE AGAIN

This message may display when you try to start the vehicle, but the column remains locked. Try turning the steering wheel while starting the vehicle to unlock the steering column. If the vehicle still does not start, turn the steering wheel the other way, and try starting the vehicle again.

Tire Messages

Object-ID=2243168 Owner=Owens, Lynnette
LMD=07-Oct-2015 LMB=Clark, Lorien

SERVICE TIRE MONITOR SYSTEM

This message displays if there is a problem with the Tire Pressure Monitor System (TPMS). See *Tire Pressure Monitor Operation* ⇨ *328*.

TIRE LEARNING ACTIVE

This message displays when the system is learning new tires. See *Tire Pressure Monitor Operation* ⇨ *328*.

TIRE PRESSURE LOW ADD AIR TO TIRE

This message displays when the pressure in one or more of the tires is low.

This message also displays LEFT FRONT, RIGHT FRONT, LEFT REAR, or RIGHT REAR to indicate the location of the low tire.

The low tire pressure warning light will also come on. See *Tire Pressure Light* ⇨ *137*.

If a tire pressure message appears on the DIC, stop as soon as possible. Inflate the tires by adding air until the tire pressure is equal to the values shown on the Tire and Loading Information label. See *Tires* ⇨ *318*, *Vehicle Load Limits* ⇨ *211*, and *Tire Pressure* ⇨ *325*.

More than one tire pressure message can appear at a time. The DIC also shows the tire pressure values. See *Driver Information Center (DIC)* ⇨ *140*.

Transmission Messages

Object-ID=4504118 Owner=Owens, Lynnette
LMD=27-Apr-2016 LMB=Owens, Lynnette

SERVICE TRANSMISSION

This message displays if there is a problem with the transmission. See your dealer.

SHIFT DENIED

This message displays when using the Driver Shift Control (DSC) and attempting to shift to a gear not appropriate for the vehicle speed and engine revolutions per minute (rpm). See *Manual Mode* ⇨ *226*.

SHIFT TO PARK

This message displays when the transmission needs to be shifted to P (Park). This may appear when turning the ignition off if the vehicle is not in P (Park).

TRANSMISSION HOT — IDLE ENGINE

This message displays and a chime sounds if the transmission fluid in the vehicle gets hot. Driving with the transmission fluid temperature high can cause damage to the vehicle. Stop the vehicle and let it idle to allow the transmission to cool. This message clears when the fluid temperature reaches a safe level.

Vehicle Reminder Messages

Object-ID=2366207 Owner=Owens, Lynnette
LMD=07-Oct-2015 LMB=Clark, Lorien

ICE POSSIBLE DRIVE WITH CARE

This message displays when ice conditions are possible.

Vehicle Speed Messages

Object-ID=2857826 Owner=Owens, Lynnette
LMD=07-Oct-2015 LMB=Clark, Lorien

SELECTED SPEED LIMIT EXCEEDED

This message is displayed when the vehicle speed is greater than the set speed. See "Speed Warning" under *Driver Information Center (DIC)* ⇨ *140*.

VEHICLE SPEED LIMITED

This message is displayed under certain conditions when there is a problem and the vehicle's speed is being limited.

Washer Fluid Messages

Object-ID=2274967 Owner=Owens, Lynnette
LMD=07-Oct-2015 LMB=Clark, Lorien

WASHER FLUID LOW ADD FLUID

This message may display when the washer fluid level is low. Fill the windshield washer reservoir as soon as possible. See *Engine Compartment Overview* ⇨ *281* for the location of the windshield washer reservoir. Also, see *Washer Fluid* ⇨ *300*.

Vehicle Personalization

Object-ID=4532213 Owner=Binge, Rob
LMD=09-Jun-2016 LMB=Binge, Rob

The following are all possible vehicle personalization features. Depending on the vehicle, some may not be available.

For "System", "Apps", and "Personal" features and functions, see "Settings" in the Infotainment manual.

To access the vehicle personalization menu:

1. Touch the SETTINGS icon on the Home page on the infotainment display.
2. Touch Vehicle to display a list of available options.
3. Touch to select the desired feature setting.
4. Touch ◯ or | to turn off or on a feature.
5. Touch < to go back to the previous menu or touch X to exit the SETTINGS menu.

The menu may contain the following:

Cadillac CTS/CTS-V Owner Manual (GMNA-Localizing-U.S./Canada-2ndPrint-11254870) - 2017 - Final Review - 6/14/16

Driving Mode

These settings will overwrite the main Vehicle Mode selections made with the mode button(s) on the console.

Press and the following may display:

- Engine Sound Management
- Steering
- Suspension

Engine Sound Management

This allows the Engine Sound Management setting to be changed.

Select Auto (Mode Selector), Tour, Sport, or Track.

Steering

This allows the Steering setting to be changed.

Select Auto (Mode Selector), Tour, Sport, or Track.

Suspension

This allows the Suspension setting to be changed.

Select Auto (Mode Selector), Tour, Sport, or Track.

Climate and Air Quality

Select and the following may display:

- Auto Fan Speed
- Air Quality Sensor
- Auto Cooled Seats
- Auto Heated Seats
- Auto Defog
- Auto Rear Defog

Auto Fan Speed

This setting specifies the amount of airflow when the climate control fan setting is Auto Fan.

Select Low, Medium, or High.

Air Quality Sensor

This setting switches the system into Recirculation Mode based on the quality of the outside air.

Select Off, Low Sensitivity, or High Sensitivity.

Auto Cooled Seats

When enabled, this feature will automatically activate ventilated seats at the level required by the interior temperature. See *Heated and Ventilated Front Seats* ⇨ *65*.

Touch ◯ or | to turn off or on.

Auto Heated Seats

When enabled, this feature will automatically activate the heated seats at the level required by the interior temperature. The auto heated seats can be turned off by using the heated seat buttons on the center stack. See *Heated and Ventilated Front Seats* ⇨ *65*.

Touch ◯ or | to turn off or on.

Auto Defog

When set to On, the front defog will automatically react to temperature and humidity conditions that may cause fogging.

Touch ◯ or | to turn off or on.

Auto Rear Defog

If equipped, this feature will automatically turn on the rear defog.

Touch ◯ or | to turn off or on.

Collision/Detection Systems

Select the Collision/Detection Systems menu and the following may display:

- Alert Type
- Forward Collision System
- Rear Cross Traffic Alert
- Adaptive Cruise Go Notifier
- Lane Change Alert

Alert Type

This feature will set crash alerts to beeps or seat vibrations. This setting affects all crash alerts including:

- Forward Collision
- Lane Keep Assist
- Adaptive Cruise Control
- Parking Assist
- Backing Warning

Select Beeps or Safety Alert Seat.

Forward Collision System

This feature will turn on or off Forward Collision Alert (FCA) and Forward Automatic Braking (FAB). The Off setting disables all FCA and FAB functions. With the Alert and Brake setting, both FCA and FAB are available. The Alert setting disables FAB. See *Forward Automatic Braking (FAB)* ⇨ *259*.

Select Off, Alert, or Alert and Brake.

Rear Cross Traffic Alert

This allows the Rear Cross Traffic Alert feature to be turned on or off. See *Assistance Systems for Parking or Backing* ⇨ *250*.

Touch ◯ or | to turn off or on.

Adaptive Cruise Go Notifier

This feature will give a reminder from Adaptive Cruise Control when it has brought the vehicle to a complete stop behind another stopping vehicle, and then that vehicle drives on. See *Adaptive Cruise Control* ⇨ *240*.

Touch ◯ or | to turn off or on.

Lane Change Alert

The LCA system is a lane-changing aid that assists drivers with avoiding lane change crashes. See *Lane Change Alert (LCA)* ⇨ *261*.

Touch ◯ or | to turn off or on.

Comfort and Convenience

Select and the following may display:

- Auto Memory Recall
- Easy Exit Options
- Chime Volume
- Reverse Tilt Mirror
- Rainsense Wipers

Auto Memory Recall

This feature automatically recalls the current driver's previously stored 1 or 2 button positions when entering the vehicle. See *Memory Seats* ⇨ *63*.

Select Off or On.

Easy Exit Options

This feature automatically recalls the current driver's previously stored (Exit) button position when exiting the vehicle. See *Memory Seats* ⇨ *63*.

Touch ◯ or | to turn off or on.

Chime Volume

This determines the chime volume level.

Touch ▲ or ▼ to adjust the volume.

Reverse Tilt Mirror

This allows the feature to be turned on or off.

Select Off, On - Driver and Passenger, On - Driver, or On - Passenger.

Rainsense Wipers

This setting automatically turns on the wipers when moisture is detected and the wiper switch is in intermittent mode.

Select Disabled or Enabled.

Lighting

Select and the following may display:

- Vehicle Locator Lights
- Exit Lighting

Vehicle Locator Lights

This feature will flash the exterior lamps and allows some of the exterior lamps and most of the interior lamps to turn on briefly when 🔓 on the Remote Keyless Entry (RKE) transmitter is pressed to locate the vehicle.

Touch ◯ or | to turn off or on.

Exit Lighting

This allows the selection of how long the exterior lamps stay on when leaving the vehicle when it is dark outside.

Select Off, 30 Seconds, 60 Seconds, or 120 Seconds.

Power Door Locks

Select and the following may display:

- Unlocked Door Anti-Lockout
- Auto Door Unlock
- Delayed Door Lock

Unlocked Door Anti-Lockout

When on, this feature will keep the driver door from locking when the door is open. If Off is selected, the Delayed Door Lock menu will be available.

Touch ◯ or | to turn off or on.

Auto Door Unlock

This allows selection of which of the doors will automatically unlock when the vehicle is shifted into P (Park).

Select Off, All Doors, or Driver Door.

Delayed Door Lock

When on, this feature will delay the locking of the doors. To override the delay, press the power door lock switch on the door.

Touch ◯ or | to turn off or on.

Remote Lock, Unlock, Start

Select and the following may display:

- Remote Unlock Light Feedback
- Remote Lock Feedback
- Remote Door Unlock
- Remote Start Auto Cool Seats

- Remote Start Auto Heat Seats
- Remote Window Operation
- Passive Door Unlock
- Passive Door Lock
- Remote Left in Vehicle Alert

Remote Unlock Light Feedback

When on, the exterior lamps will flash when unlocking the vehicle with the RKE transmitter.

Select Off or Flash Lights.

Remote Lock Feedback

This allows selection of what type of feedback is given when locking the vehicle with the RKE transmitter.

Select Off, Lights and Horn, Lights Only, or Horn Only.

Remote Door Unlock

This allows selection of which doors will unlock when pressing 🔓 on the RKE transmitter.

Select All Doors or Driver Door.

Remote Start Auto Cool Seats

If equipped and turned on, this feature will turn on the ventilated seats when using remote start on warm days. See *Heated and Ventilated Front Seats* ⇨ *65* and *Remote Vehicle Start* ⇨ *38*.

Select Off or On.

Remote Start Auto Heat Seats

If equipped and turned on, this feature will turn on the heated seats when using remote start on cold days. See *Heated and Ventilated Front Seats* ⇨ *65* and *Remote Vehicle Start* ⇨ *38*.

Select Off or On.

Remote Window Operation

This allows the window to be opened when pressing and holding 🔓 on the RKE transmitter. See *Remote Keyless Entry (RKE) System Operation* ⇨ *32*.

Touch ◯ or | to turn off or on.

Passive Door Unlock

This allows the selection of what doors will unlock when using the button on the driver door to unlock the vehicle.

Select All Doors or Driver Door.

Passive Door Lock

This allows passive locking to be turned on or off and selects feedback. See *Remote Keyless Entry (RKE) System Operation* ⇨ *32*.

Select Off, On with Horn Chirp, or On.

Remote Left in Vehicle Alert

This feature sounds an alert when the RKE transmitter is left in the vehicle. This menu also enables Remote No Longer In Vehicle Alert.

Touch ◯ or | to turn off or on.

Teen Driver

See “Teen Driver” under “Settings” in the infotainment manual.

Valet Mode

This will lock the infotainment system and steering wheel controls. It may also limit access to vehicle storage locations (if equipped).

To enable valet mode:

1. Enter a four-digit code on the keypad.
2. Select Enter to go to the confirmation screen.
3. Re-enter the four-digit code.

Touch LOCK or UNLOCK to lock or unlock the system. Touch Back to go back to the previous menu.

Universal Remote System

Object-ID=3581121 Owner=Cusenza, Mark LMD=08-Oct-2015 LMB=Clark, Lorien

See *Radio Frequency Statement (US/CAN)* ⇨ *397* or *Radio Frequency Statement (MEXICO1)* ⇨ *397* or *Radio Frequency Statement (MEXICO)* ⇨ *397*.

Universal Remote System Programming (US/CAN)

Object-ID=3020491 Owner=Cusenza, Mark LMD=08-Oct-2015 LMB=Clark, Lorien

2718354

If equipped, these buttons are in the overhead console.

This system can replace up to three remote control transmitters used to activate devices such as garage door openers, security systems, and home automation devices. These instructions refer to a garage door opener, but can be used for other devices.

Do not use the Universal Remote system with any garage door opener that does not have the stop and reverse feature. This includes any garage door opener model manufactured before April 1, 1982.

Read these instructions completely before programming the Universal Remote system. It may help to have another person assist with the programming process.

Keep the original hand-held transmitter for use in other vehicles as well as for future programming. Erase the programming when vehicle ownership is terminated. See “Erasing Universal Remote System Buttons” later in this section.

To program a garage door opener, park outside directly in line with and facing the garage door opener receiver. Clear all people and objects near the garage door.

Make sure the hand-held transmitter has a new battery for quick and accurate transmission of the radio-frequency signal.

Programming the Universal Remote System

For questions or help programming the Universal Remote system, call 1-800-355-3515 or see www.homelink.com.

Programming involves time-sensitive actions, and may time out causing the procedure to be repeated.

To program up to three devices:

1. Hold the end of the hand-held transmitter about 3 to 8 cm (1 to 3 in) away from the Universal Remote system buttons with the indicator light in view. The hand-held transmitter was supplied by the manufacturer of the garage door opener receiver.
2. At the same time, press and hold both the hand-held transmitter button and one of the three Universal Remote system buttons to be used to operate the garage door. Do not release either button until the indicator light changes from a slow to a rapid flash. Then release both buttons.

   Some garage door openers may require substitution of Step 2 with the procedure under “Radio Signals for Canada and Some Gate Operators” later in this section.
3. Press and hold the newly programmed Universal Remote system button for five seconds while watching the indicator light and garage door activation.
   - If the indicator light stays on continuously or the garage door moves when the button is pressed, then programming is complete. There is no need to complete Steps 4–6.
   - If the indicator light does not come on or the garage door does not move, a second button press may be required. For a second time, press and hold the newly programmed button for five seconds. If the light stays on or the garage door moves, programming is complete.
   - If the indicator light blinks rapidly for two seconds, then changes to a solid light and the garage door does not move, continue with programming Steps 4–6.

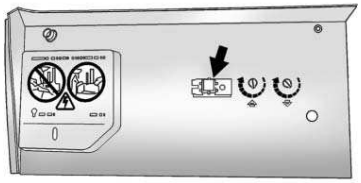

Learn or Smart Button

2046280

4. After completing Steps 1–3, locate the Learn or Smart button inside the garage on the garage

door opener receiver. The name and color of the button may vary by manufacturer.

5. Press and release the Learn or Smart button. Step 6 must be completed within 30 seconds of pressing this button.
6. Inside the vehicle, press and hold the newly programmed Universal Remote system button for two seconds and then release it. If the garage door does not move or the lamp on the garage door opener receiver does not flash, press and hold the same button a second time for two seconds, then release it. Again, if the door does not move or the garage door lamp does not flash, press and hold the same button a third time for two seconds, then release it.

The Universal Remote system should now activate the garage door.

Repeat the process for programming the two remaining buttons.

Radio Signals for Canada and Some Gate Operators

For questions or programming help call 1-800-355-3515 or see www.homelink.com.

Canadian radio-frequency laws and some U.S. gate operators require transmitter signals to time out or quit after several seconds of transmission. This may not be long enough for the Universal Remote system to pick up the signal during programming.

If the programming did not work, replace Step 2 under “Programming the Universal Remote System” with the following:

Press and hold the Universal Remote system button while pressing and releasing the hand-held transmitter button every two seconds until the signal has been successfully accepted by the Universal Remote system. The Universal Remote system indicator light will flash slowly at first and then rapidly. Proceed with Step 3 under “Programming the Universal Remote System” to complete.

Universal Remote System Programming (MEXICO)

Object-ID=3681648 Owner=Cusenza, Mark LMD=08-Oct-2015 LMB=Clark, Lorien

2718354

If equipped, these buttons are in the overhead console.

This system can replace up to three remote control transmitters used to activate devices such as garage door openers, security systems, and home automation devices. These instructions refer to a garage door opener, but can be used for other devices.

Do not use the Universal Remote system with any garage door opener that does not have the stop and reverse feature. This includes any garage door opener model manufactured before April 1, 1982.

Read these instructions completely before programming the Universal Remote system. It may help to have another person assist with the programming process.

Keep the original hand-held transmitter for use in other vehicles as well as for future programming. Erase the programming when vehicle ownership is terminated. See "Erasing Universal Remote System Buttons" later in this section.

To program a garage door opener, park outside directly in line with and facing the garage door opener receiver. Clear all people and objects near the garage door.

Make sure the hand-held transmitter has a new battery for quick and accurate transmission of the radio-frequency signal.

Programming the Universal Remote System

For questions or help programming the Universal Remote system, call 01-800-466-0805 or see www.homelink.com.

Programming involves time-sensitive actions, and may time out causing the procedure to be repeated.

To program up to three devices:

1. Hold the end of the hand-held transmitter about 3 to 8 cm (1 to 3 in) away from the Universal Remote system buttons with the indicator light in view. The hand-held transmitter was supplied by the manufacturer of the garage door opener receiver.
2. At the same time, press and hold both the hand-held transmitter button and one of the three Universal Remote system buttons to be used to operate the garage door. Do not release either button until the indicator light changes from a slow to a rapid flash. Then release both buttons.

   Some garage door openers may require substitution of Step 2 with the procedure under "Radio Signals for Some Gate Operators" later in this section.
3. Press and hold the newly programmed Universal Remote system button for five seconds while watching the indicator light and garage door activation.
   - If the indicator light stays on continuously or the garage door moves when the button is pressed, then programming is complete. There is no need to complete Steps 4–6.
   - If the indicator light does not come on or the garage door does not move, a second button press may be required. For a second time, press and hold the newly programmed button for five seconds. If the light stays on or the garage door moves, programming is complete.
   - If the indicator light blinks rapidly for two seconds, then changes to a solid light and

the garage door does not move, continue with programming Steps 4–6.

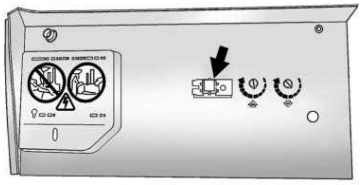

Learn or Smart Button

2046280

4. After completing Steps 1–3, locate the Learn or Smart button inside the garage on the garage door opener receiver. The name and color of the button may vary by manufacturer.
5. Press and release the Learn or Smart button. Step 6 must be completed within 30 seconds of pressing this button.
6. Inside the vehicle, press and hold the newly programmed Universal Remote system button for two seconds and then release it. If the garage door does not move or the lamp on the garage door opener receiver does not flash, press and hold the same button a second time for two seconds, then release it. Again, if the door does not move or the garage door lamp does not flash, press and hold the same button a third time for two seconds, then release it.

The Universal Remote system should now activate the garage door.

Repeat the process for programming the two remaining buttons.

Radio Signals for Some Gate Operators

For questions or programming help call 01-800-466-0805 or see www.homelink.com.

Some gate operators require transmitter signals to time out or quit after several seconds of transmission. This may not be long enough for the Universal Remote system to pick up the signal during programming.

If the programming did not work, replace Step 2 under “Programming the Universal Remote System” with the following:

Press and hold the Universal Remote system button while pressing and releasing the hand-held transmitter button every two seconds until the signal has been successfully accepted by the Universal Remote system. The Universal Remote system indicator light will flash slowly at first and then rapidly. Proceed with Step 3 under “Programming the Universal Remote System” to complete.

Universal Remote System Operation

Object-ID=2877203 Owner=Cusenza, Mark LMD=08-Oct-2015 LMB=Clark, Lorien

Using the Universal Remote System

Press and hold the appropriate Universal Remote system button for at least one-half second. The indicator light will come on while the signal is being transmitted.

Erasing Universal Remote System Buttons

Erase all programmed buttons when vehicle ownership is terminated.

To erase:

1. Press and hold the two outside buttons until the indicator light begins to flash. This should take about 10 seconds.
2. Release both buttons.

Reprogramming a Single Universal Remote System Button

To reprogram any of the system buttons:

1. Press and hold any one of the buttons. Do not release the button.
2. The indicator light will begin to flash after 20 seconds. Without releasing the button, proceed with Step 1 under “Programming the Universal Remote System.”

Cadillac CTS/CTS-V Owner Manual (GMNA-Localizing-U.S./Canada-2ndPrint-11254870) - 2017 - Final Review - 6/14/16

Lighting

Exterior Lighting

Exterior Lamp Controls 169
Exterior Lamps Off Reminder ... 171
Headlamp High/Low-Beam Changer 171
Flash-to-Pass 171
Daytime Running Lamps (DRL) 172
Automatic Headlamp System ... 172
Adaptive Forward Lighting (AFL) 173
Hazard Warning Flashers 173
Turn and Lane-Change Signals 173

Interior Lighting

Instrument Panel Illumination Control 174
Courtesy Lamps 174
Dome Lamps 174
Reading Lamps 175

Lighting Features

Entry Lighting 175
Exit Lighting 175
Battery Load Management 176
Battery Power Protection 176
Exterior Lighting Battery Saver 176

Exterior Lighting

Exterior Lamp Controls

Object-ID=4490316 Owner=Parker, Cynthia
LMD=08-Apr-2016 LMB=Parker, Cynthia

2742865

Turn the control to the following positions:

⏻ **:** Turns off the exterior lamps. The knob returns to the AUTO position after it is released. Turn to ⏻ again to reactivate the AUTO mode.

In Canada, the headlamps will automatically reactivate when the vehicle is shifted out of P (Park).

AUTO : Automatically turns the exterior lamps on and off, depending on outside lighting.

: Turns on the parking lamps including all lamps, except the headlamps.

: Turns on the headlamps together with the parking lamps and instrument panel lights.

IntelliBeam® System

If equipped, this system turns the vehicle's high-beam headlamps on and off according to surrounding traffic conditions.

The system turns the high-beam headlamps on when it is dark enough and there is no other traffic present.

2164850

This light comes on in the instrument cluster when the IntelliBeam system is enabled.

Turning On and Enabling IntelliBeam

To enable the IntelliBeam system, with the turn signal lever in the neutral position, turn the exterior lamp control to AUTO. The blue high-beam on light appears on the instrument cluster when the high beams are on.

Driving with IntelliBeam

The system only activates the high beams when driving over 40 km/h (25 mph).

There is a sensor near the top center of the windshield, which automatically controls the system. Keep this area of the windshield clear of debris to allow for best system performance.

The high-beam headlamps remain on, under the automatic control, until one of the following situations occurs:

- The system detects an approaching vehicle's headlamps.
- The system detects a preceding vehicle's taillamps.
- The outside light is bright enough that high-beam headlamps are not required.
- The vehicle's speed drops below 20 km/h (12 mph).
- The turn signal lever is moved forward to the high-beam position or the Flash-to-Pass feature is used. See *Headlamp High/Low-Beam Changer* ➪ *171* and *Flash-to-Pass* ➪ *171*.
- The IntelliBeam system can be disabled by the High/Low-Beam Changer or the Flash-to-Pass feature. If this happens, the High/Low-Beam Changer must be activated two times within two seconds to reactivate the IntelliBeam system. The instrument cluster light will come on to indicate IntelliBeam is reactivated.

The high beams may not turn off automatically if the system cannot detect other vehicle's lamps because of any of the following:

- The other vehicle's lamp(s) are missing, damaged, obstructed from view, or otherwise undetected.

- The other vehicle's lamp(s) are covered with dirt, snow, and/or road spray.
- The other vehicle's lamp(s) cannot be detected due to dense exhaust, smoke, fog, snow, road spray, mist, or other airborne obstructions.
- Your vehicle's windshield is dirty, cracked, or obstructed by something that blocks the view of the light sensor.
- Your vehicle's windshield is covered with ice, dirt, haze, or other obstructions.
- Your vehicle is loaded such that the front end points upward, causing the light sensor to aim high and not detect headlamps and taillamps.
- You are driving on winding or hilly roads.

You may need to manually disable or cancel the high-beam headlamps by turning the low-beam headlamps on, if any of the above conditions exist.

Exterior Lamps Off Reminder

Object-ID=2201227 Owner=Parker, Cynthia LMD=28-Aug-2012 LMB=Dobson, Bert

A warning chime will sound if the exterior lamp control is left on in either the headlamp or parking lamp position and the driver door is opened with the ignition off.

Headlamp High/Low-Beam Changer

Object-ID=4421241 Owner=Parker, Cynthia LMD=16-Feb-2016 LMB=Parker, Cynthia

: Push the turn signal lever away from you and release, to turn the high beams on. To return to low beams, push the lever again or pull it toward you and release.

2065302

This indicator light turns on in the instrument cluster when the high-beam headlamps are on.

Flash-to-Pass

Object-ID=2736731 Owner=Parker, Cynthia LMD=28-Aug-2012 LMB=Dobson, Bert

This feature allows the high-beam headlamps to be used to signal the driver in front of you that you want to pass.

Pull and hold the turn signal lever toward you to use this feature. When this is done the following will occur:

- If the headlamps are off or in low-beam mode, the high-beam headlamps will turn on. They will stay on as long as the lever is held there. Release the lever to turn them off.
- If the headlamps are in high-beam mode, they will go to low beam.

Daytime Running Lamps (DRL)

Object-ID=4490393 Owner=Parker, Cynthia LMD=08-Apr-2016 LMB=Parker, Cynthia

DRL can make it easier for others to see the front of your vehicle during the day. Fully functional DRL are required on all vehicles first sold in Canada.

The dedicated DRL will come on when all of the following conditions are met:

- The ignition is on.
- The exterior lamp control is in AUTO.
- The light sensor determines it is daytime.
- The parking brake is released or the vehicle is not in P (Park).

The taillamps, instrument panel lights, and other lamps will not be on.

The DRL turn off when the headlamps are turned to ⏻ or the ignition is off. For vehicles sold in Canada, this control only works when the transmission is in P (Park).

Automatic Headlamp System

Object-ID=4490411 Owner=Parker, Cynthia LMD=05-May-2016 LMB=Parker, Cynthia

When the exterior lamp control is set to AUTO and it is dark enough outside, the headlamps come on automatically.

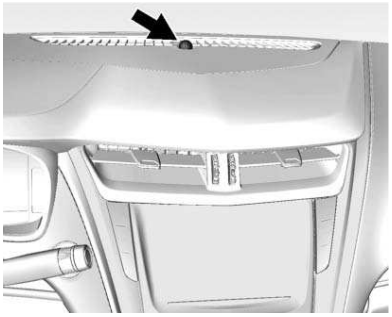

2899873

If equipped, the light sensor is on top of the instrument panel or on the windshield near the rearview mirror. Do not cover the sensor, otherwise the headlamps will come on when they are not needed.

The system may also turn on the headlamps when driving through a parking garage or tunnel.

If the vehicle is started in a dark garage, the automatic headlamp system comes on immediately. If it is light outside when the vehicle leaves the garage, there is a slight delay before the automatic headlamp system turns off the headlamps. During that delay, the instrument cluster may not be as bright as usual. Make sure the instrument panel brightness control is in the full bright position. See *Instrument Panel Illumination Control* ⇨ *174*.

When it is bright enough outside, the headlamps will turn off.

The automatic headlamp system turns off when the exterior lamp control is turned to ⏻ or the ignition is off. For vehicles sold in Canada, this control only works when the transmission is in P (Park).

Lights On with Wipers

If the windshield wipers are activated in daylight with the engine on, and the exterior lamp control is in AUTO,

the headlamps, parking lamps, and other exterior lamps come on. The transition time for the lamps coming on varies based on wiper speed. When the wipers are not operating, these lamps turn off. Move the exterior lamp control to ⏻ or ≋ to disable this feature.

Adaptive Forward Lighting (AFL)

Object-ID=2713297 Owner=Parker, Cynthia LMD=28-Aug-2012 LMB=Dobson, Bert

On vehicles with the AFL system, the headlamps pivot horizontally to provide greater road illumination while turning. To enable AFL, set the exterior lamp control on the turn signal lever to the AUTO position. Moving the control out of the AUTO position will deactivate the system. AFL will operate when the vehicle speed is greater than 3 km/h (2 mph). AFL will not operate when the transmission is in R (Reverse). AFL is not immediately operable after starting the vehicle; driving a short distance is required to calibrate the AFL. See *Exterior Lamp Controls* ⇨ *169*.

Hazard Warning Flashers

Object-ID=4490420 Owner=Parker, Cynthia LMD=08-Apr-2016 LMB=Parker, Cynthia

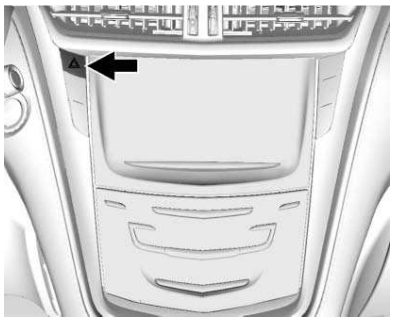

2899871

⚠ **:** Press and hold this button for one second to make the front and rear turn signal lamps flash on and off. Release the button for at least one second and press again to turn the flashers off.

The hazard warning flashers turn on automatically if the airbags deploy.

Turn and Lane-Change Signals

Object-ID=2711966 Owner=Parker, Cynthia LMD=28-Aug-2012 LMB=Dobson, Bert

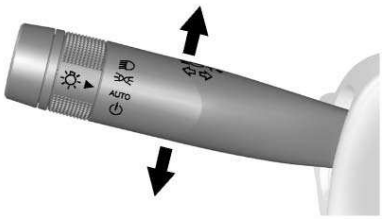

2742867

Move the lever all the way up or down to signal a turn.

An arrow on the instrument cluster flashes in the direction of the turn or lane change.

Raise or lower the lever until the arrow starts to flash to signal a lane change. Hold it there until the lane change is completed. If the lever is briefly pressed and released, the turn signal flashes three times.

The turn and lane-change signal can be turned off manually by moving the lever back to its original position.

If after signaling a turn or lane change, the arrow flashes rapidly or does not come on, a signal bulb might be burned out.

Replace any burned out bulbs. If a bulb is not burned out, check the fuse. See *Fuses and Circuit Breakers* ⇨ *309*.

Interior Lighting

Instrument Panel Illumination Control

Object-ID=4490424 Owner=Parker, Cynthia
LMD=08-Apr-2016 LMB=Parker, Cynthia

3448518

The brightness of the instrument panel lighting and steering wheel controls can be adjusted.

: Move the thumbwheel up or down to brighten or dim the lights.

The brightness of the displays automatically adjusts based on outdoor lighting. The instrument panel illumination control will set the lowest level to which the displays will automatically be adjusted.

Courtesy Lamps

Object-ID=2756321 Owner=Parker, Cynthia
LMD=16-Feb-2015 LMB=Parker, Cynthia

The courtesy lamps come on when any door is opened and the dome lamp is in the DOOR position.

Dome Lamps

Object-ID=3396930 Owner=Parker, Cynthia
LMD=30-Jan-2014 LMB=Parker, Cynthia

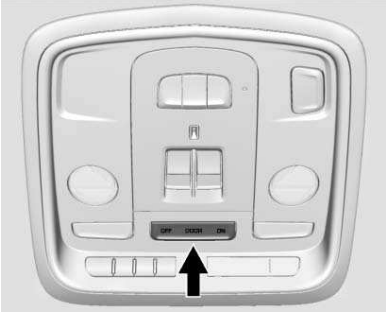

3379338

To change the dome lamp settings, press the following:

OFF : Turns the lamp off, even when a door is open.

DOOR : The lamp comes on when a door is opened.

ON : Turns the lamp on.

Reading Lamps

Object-ID=4084032 Owner=Parker, Cynthia
LMD=16-Jul-2015 LMB=Parker, Cynthia

There are front and rear reading lamps on the overhead console and over the rear passenger doors. These lamps come on when any door is opened.

To manually turn the reading lamps on or off:

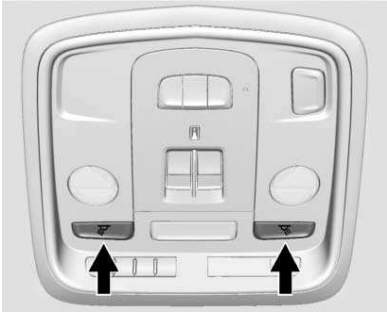

3379339

Press or next to each overhead console reading lamp.

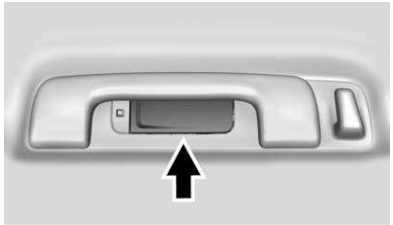

4083265

Press the lamp lenses over the rear passenger doors.

Lighting Features

Entry Lighting

Object-ID=4084193 Owner=Parker, Cynthia
LMD=11-Feb-2015 LMB=Parker, Cynthia

Some exterior lamps and most of the interior lights turn on briefly at night when is pressed on the Remote Keyless Entry (RKE) transmitter. See *Remote Keyless Entry (RKE) System Operation* ➪ *32*. After about 30 seconds the exterior lamps turn off, then the remaining interior lights dim to off. Entry lighting can be disabled manually by changing the ignition out of the OFF position, or by pressing on the RKE transmitter.

This feature can be turned on or off. See “Vehicle Locator Lights” under *Vehicle Personalization* ➪ *158*.

Exit Lighting

Object-ID=4009391 Owner=Parker, Cynthia
LMD=16-Feb-2015 LMB=Parker, Cynthia

Some exterior lamps and interior lights come on at night, or in areas with limited lighting, when the driver door is opened after the ignition is

turned off. The dome lamp comes on after the ignition is changed to the OFF position. The exterior lamps and dome lamp remain on for a set amount of time, then automatically turn off.

The exterior lamps turn off immediately by turning the exterior lamp control off.

This feature can be changed. See *Vehicle Personalization* ⇨ *158*.

Battery Load Management

Object-ID=2399442 Owner=Parker, Cynthia LMD=04-Feb-2014 LMB=Parker, Cynthia

The vehicle has Electric Power Management (EPM), which estimates the battery's temperature and state of charge. It then adjusts the voltage for best performance and extended life of the battery.

When the battery's state of charge is low, the voltage is raised slightly to quickly bring the charge back up. When the state of charge is high, the voltage is lowered slightly to prevent overcharging. If the vehicle has a voltmeter gauge or a voltage display on the Driver Information Center (DIC), you may see the voltage move up or down. This is normal. If there is a problem, an alert will be displayed.

The battery can be discharged at idle if the electrical loads are very high. This is true for all vehicles. This is because the generator (alternator) may not be spinning fast enough at idle to produce all the power that is needed for very high electrical loads.

A high electrical load occurs when several of the following are on, such as: headlamps, high beams, fog lamps, rear window defogger, climate control fan at high speed, heated seats, engine cooling fans, and loads plugged into accessory power outlets.

EPM works to prevent excessive discharge of the battery. It does this by balancing the generator's output and the vehicle's electrical needs. It can increase engine idle speed to generate more power, whenever needed. It can temporarily reduce the power demands of some accessories.

Normally, these actions occur in steps or levels, without being noticeable. In rare cases at the highest levels of corrective action, this action may be noticeable to the driver. If so, a DIC message might be displayed. If a battery message is displayed, it is recommended that the driver reduce the electrical loads as much as possible. See *Driver Information Center (DIC)* ⇨ *140*.

Battery Power Protection

Object-ID=2277302 Owner=Parker, Cynthia LMD=17-May-2011 LMB=Parker, Cynthia

The battery saver feature is designed to protect the vehicle's battery.

If some interior lamps are left on and the ignition is turned off, the battery rundown protection system automatically turns the lamp off after some time.

Exterior Lighting Battery Saver

Object-ID=4178646 Owner=Parker, Cynthia LMD=04-May-2015 LMB=Parker, Cynthia

The exterior lamps turn off about 10 minutes after the ignition is turned off, if the parking lamps or headlamps have been manually left on. This protects against draining the battery.

Cadillac CTS/CTS-V Owner Manual (GMNA-Localizing-U.S./Canada-2ndPrint-11254870) - 2017 - Final Review - 6/14/16

To restart the 10-minute timer, turn the exterior lamp control to the off position and then back to the parking lamp or headlamp position.

To keep the lamps on for more than 10 minutes, the ignition must be in the ACC/ACCESSORY or ON/RUN/START position.

Cadillac CTS/CTS-V Owner Manual (GMNA-Localizing-U.S./Canada-2ndPrint-11254870) - 2017 - Final Review - 6/14/16

Infotainment System

Introduction
Infotainment 178

Performance Data Recorder (PDR)
Performance Data Recorder (PDR) (US/CAN) 178
Performance Data Recorder (PDR) (MEXICO) 183

Introduction

Infotainment

Object-ID=4533551 Owner=Mason, Scott
LMD=06-Jun-2016 LMB=Mason, Scott

See the infotainment manual for information on the radio and available features.

Performance Data Recorder (PDR)

Performance Data Recorder (PDR) (US/CAN)

Object-ID=4290676 Owner=Binge, Rob
LMD=07-Jun-2016 LMB=Binge, Rob

If equipped, the PDR icon displays on the Home Page.

Important Information

Use of the PDR may be prohibited or legally restricted in certain countries and situations. Ensure compliance with applicable laws and regulations, including, but not limited to: privacy laws, laws related to camera surveillance and recordings, road traffic and security laws, and laws on the protection of publicity and personality rights.

- Do not use the PDR if it causes distraction.
- Do not rely on camera footage to steer the vehicle.

- Comply with any notice and consent requirements before capturing and/or recording the voices or images of other persons or before collecting other personal data.
- Notify other drivers of your vehicle of the above rules and require them to comply.
- General Motors does not accept any responsibility or liability in connection with use that is not permitted.
- Law enforcement authorities may have the right to seize video recordings and use them as evidence of criminal/driving offenses against you or third parties.

The PDR records video, audio, and vehicle data. This data is stored on a removable SD card in the glove box.

The recorded data is not stored anywhere else and is only accessible from the SD card.

To begin, insert a FAT32 formatted SD card, Class 10 required, 8, 16, or 32 GB recommended, into the glove box SD card reader.

Touch the PDR icon to access the PDR menu. The options displayed are:

Start Recording

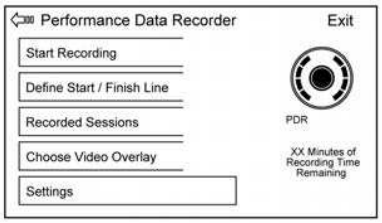

4522876

If the system is unable to begin recording, the Start Recording button is grayed out.

Touch Start Recording to begin recording. After recording begins, this button changes to Stop Recording. Touch to stop the recording session.

The recording must be stopped and the file closed before removing the SD card, or the recording cannot be reviewed.

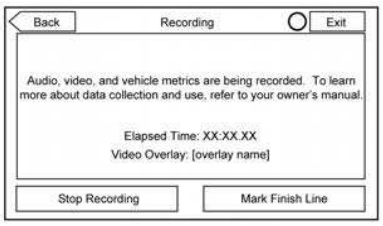

4421483

The elapsed time will show when recording. To define a finish line, see "Define Finish Line" later in this section.

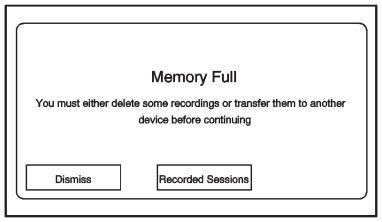

2920823

If there is no available space on the SD card, a message displays. Delete or transfer recordings on the SD card or use another SD card with free space.

To delete a recording, go to the Recorded Sessions menu and touch ✕ next to the item. See “Recorded Sessions” later in this section.

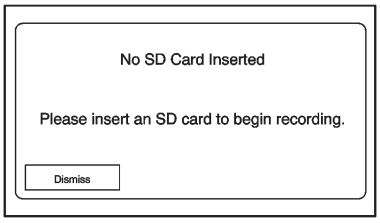

2920830

If no SD card is inserted, a message displays.

Define Finish Line

To track and record the vehicle’s lap times, the starting point of a lap must be set. Crossing this point activates the lap timer when recording.

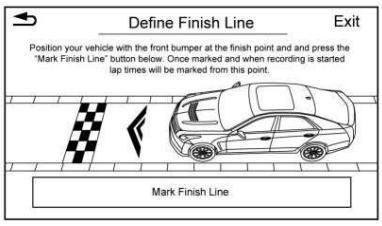

4003398

To set the finish line, position the vehicle with the front bumper at the start/finish point. From the PDR menu, touch Define Finish Line and then touch Mark Finish Line. This can be done with the vehicle moving.

Recorded Sessions

To view recorded videos, touch Recorded Sessions.

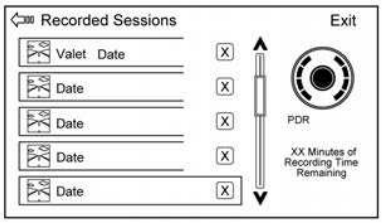

4522886

A list of recordings displays.

Select the recording to start playback.

Touch ✕ next to an item to delete that recording. Touch Yes to delete or No to cancel on the confirmation screen. Touch Dismiss to exit.

Video playback is not allowed while the vehicle is in motion.

Tap on the screen while the video is playing to display the video controls:

Video Scrubber : Changes the position and playback. The length of the bar corresponds to the time of the video. Advance or rewind the video by dragging along the bar.

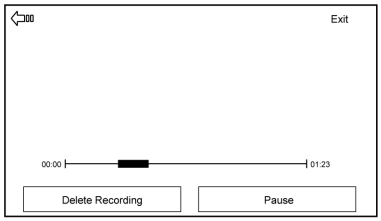

2965689

Delete Recording : Touch to delete the video. A confirmation screen displays. Touch Yes to delete or No to cancel.

Pause/Play : Touch to play or pause the video. The button will change when pressed.

⇦ **:** Touch to display the previous screen.

Exit : Touch to exit the current display.

Choose Video Overlay

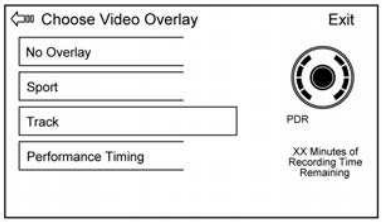

4522911

Touch the Choose Video Overlay screen button to display the menu screen.

Select one:

- No Overlay
- Sport
- Track
- Performance Timing

No Overlay:

No vehicle data displays on top of the recorded video. Vehicle data is still available with the video when accessed in the toolbox software.

Sport:

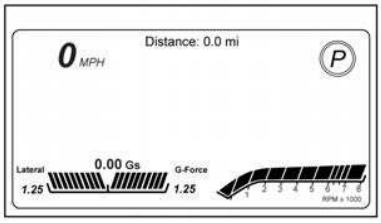

4477187

Displays these vehicle metrics:

- Vehicle Speed: Up to three digits are displayed in km/h or MPH depending on vehicle settings.
- Engine Rotations Per Minute (RPMs): The curved line shows current RPMs. As the RPMs increase, the backfill follows.
- Transmission State (Current Gear): Automatic and manual transmissions display 1, 2, etc.
- Lateral G-Force Graphic: Left and Right G-Forces are displayed. The graphic fills to the left or the right depending on the measure value. The measured G-Force displays as a number at the top of the graphic.
- Event Odometer: This displays the mileage driven since the recording began.

Track:

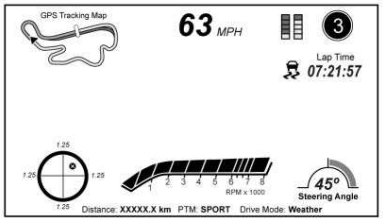

4477290

Displays these vehicle metrics:

- Vehicle Speed: Same as Sport.
- GPS Tracking Map: Shows the vehicle's current position relative to a known route.
- Engine Rotations Per Minute (RPMs): Same as Sport.
- Transmission State (Current Gear): Same as Sport.
- Friction Bubble Graphic: Lateral and longitudinal G-Forces are displayed as a dot within a bubble. A red dot displays when the vehicle starts braking and turns green when the vehicle accelerates. The dot is white when the vehicle is not moving. A white dot is the default.
- Brake and Throttle Graphic: Displays the percentage value of brake and throttle pedal position from 0–100%.
- Steering Angle: The graphic fills from the center to the left or right depending on the direction of steering. The numerical steering angle displays below the graphic.
- StabiliTrak Active Indicator: The graphic only displays if the active handling systems are activated.
- Performance Traction Management (PTM) Mode: Displays the current PTM mode. The options are Wet, Dry, Sport 1, Sport 2, or Race.
- Current Lap Time: Displays the elapsed lap time if the finish line is defined and the vehicle has crossed the defined finish line at least once.
- Event Odometer: Displays the mileage driven since the recording began.
- Drive Mode: Displays the vehicle's current drive mode.

Performance Timing:

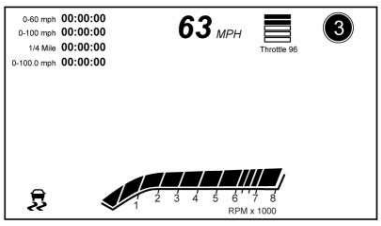

4477332

Displays these vehicle metrics:

- Vehicle Speed: Same as Sport.
- Engine Rotations Per Minute (RPMs): Same as Sport.
- Transmission State (Current Gear): Same as Sport.
- 0–100 km/h (0–60 mph), 0–200 km/h (0–100 mph), 400 m (1/4 mi), and 0–200–0 km/h (0–100–0 mph): The timer starts recording as soon as the vehicle accelerates. As the vehicle passes each speed and distance milestone, it is displayed on the overlay.
- Throttle Position: Displays the percentage of throttle applied from 0–100%.

- StabiliTrak Active Indicator: The graphic only displays if the active handling systems are activated.

Naming Convention

The recorded video file name is stored as the recorded date and the length of the recording.

If the recorded session was recorded while the system was in Valet Mode, the file name will display the mode, date, and length of time.

Settings

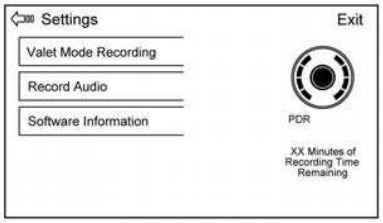

4522919

Touch the Settings button from the PDR menu to display settings.

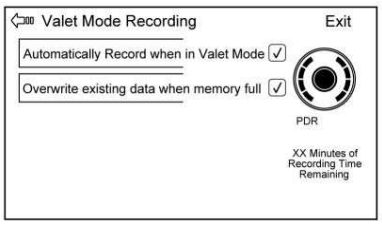

4522922

Valet Mode Recording : Allows recording preferences to be selected. It is recommended that a blank SD card be used. Available choices are:

- Automatically record when in Valet Mode: Enables the PDR to begin recording as soon as the vehicle is in Valet Mode.
- Overwrite existing data when memory full: Allows manual overwriting of previous recordings, one at a time starting with the oldest, when the current recording requires additional storage to continue.

Audio will not record during Valet Mode.

Record Audio : Allows audio to be recorded along with video.

Audio will not record during Valet Mode.

Software Information : Displays PDR software information and version numbers.

Toolbox Software : Allows for the evaluation of the driver and the vehicle performance on a personal computer after a recorded event. See www.cadillac.com to download the software.

Performance Data Recorder (PDR) (MEXICO)

Object-ID=4297412 Owner=Binge, Rob
LMD=07-Jun-2016 LMB=Binge, Rob

If equipped, the PDR icon displays on the Home Page.

Important Notes:

- Use of the Performance Data Recorder (PDR) System may be legally restricted in certain countries and situations. It is your own responsibility to ensure compliance with applicable laws

and regulations, including but not limited to privacy laws, laws related to camera surveillance and recordings, road traffic and security laws, and laws on the protection of publicity and personality rights.

- Do not use the PDR System if this could distract your attention from traffic or entail other risks.
- Do not rely exclusively on camera footage for steering the vehicle.
- Comply with any notice and consent requirements before capturing and/or recording and/or publishing the voices or images of other persons or collecting other personal data with the PDR System.
- Notify other drivers of your vehicle of the above rules and require them to comply with them.
- Valet should always be notified, consent is not needed.
- General Motors does not accept any responsibility or liability in connection with an impermissible use of the PDR System.
- Note that law enforcement authorities may have the right to seize video recordings and use them as evidence of criminal/driving offences against you or third parties.

The PDR records video, audio, and vehicle data. This data is stored on a removable SD card in the glove box.

The recorded data is not stored anywhere else and is only accessible from the SD card.

To begin, insert a FAT32 formatted SD card, Class 10 required, 8, 16, or 32 GB recommended, into the glove box SD card reader.

Touch the PDR icon to access the PDR menu. The options displayed are:

Start Recording

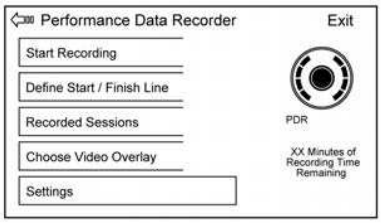

4522876

If the system is unable to begin recording, the Start Recording button is grayed out.

Touch Start Recording to begin recording. After recording begins, this button changes to Stop Recording. Touch to stop the recording session.

The recording must be stopped and the file closed before removing the SD card, or the recording cannot be reviewed.

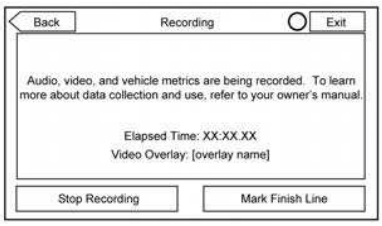

4421483

The elapsed time will show when recording. To define a finish line, see "Define Finish Line" later in this section.

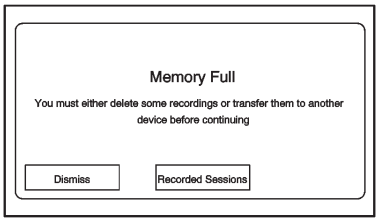

2920823

If there is no available space on the SD card, a message displays. Delete or transfer recordings on the SD card or use another SD card with free space.

To delete a recording, go to the Recorded Sessions menu and touch ✕ next to the item. See "Recorded Sessions" later in this section.

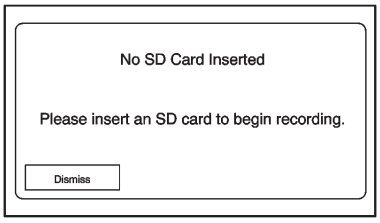

2920830

If no SD card is inserted, a message displays.

Define Finish Line

To track and record the vehicle's lap times, the starting point of a lap must be set. Crossing this point activates the lap timer when recording.

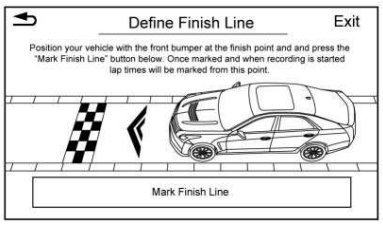

4003398

To set the finish line, position the vehicle with the front bumper at the start/finish point. From the PDR menu, touch Define Finish Line and then touch Mark Finish Line. This can be done with the vehicle moving.

Recorded Sessions

To view recorded videos, touch Recorded Sessions.

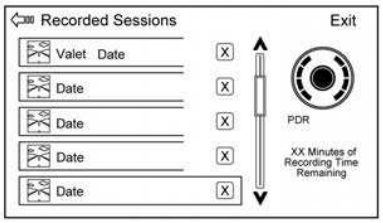

4522886

A list of recordings displays.

Select the recording to start playback.

Touch ✕ next to an item to delete that recording, Touch Yes to delete or No to cancel on the confirmation screen. Touch Dismiss to exit.

Video playback is not allowed while the vehicle is in motion.

Tap on the screen while the video is playing to display the video controls:

Video Scrubber : Changes the position and playback. The length of the bar corresponds to the time of the video. Advance or rewind the video by dragging along the bar.

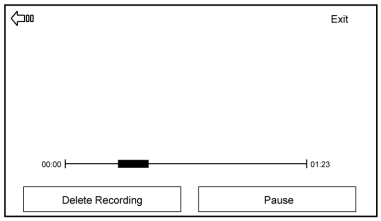

2965689

Delete Recording : Touch to delete the video. A confirmation screen displays. Touch Yes to delete or No to cancel.

Pause/Play : Touch to play or pause the video. The button will change when pressed.

⇦ **:** Touch to display the previous screen.

Exit : Touch to exit the current display.

Choose Video Overlay

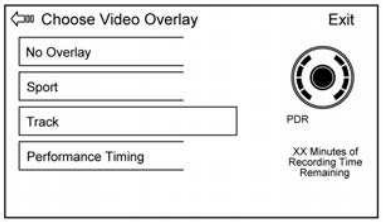

4522911

Touch the Choose Video Overlay screen button to display the menu screen.

Select one:

- No Overlay
- Sport
- Track
- Performance Timing

No Overlay:

No vehicle data displays on top of the recorded video. Vehicle data is still available with the video when accessed in the toolbox software.

Sport:

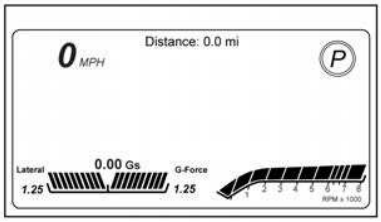

4477187

Displays these vehicle metrics:

- Vehicle Speed: Up to three digits are displayed in km/h or MPH depending on vehicle settings.

- Engine Rotations Per Minute (RPMs): The curved line shows current RPMs. As the RPMs increase, the backfill follows.
- Transmission State (Current Gear): Automatic and manual transmissions display 1, 2, etc.
- Lateral G-Force Graphic: Left and Right G-Forces are displayed. The graphic fills to the left or the right depending on the measure value. The measured G-Force displays as a number at the top of the graphic.
- Event Odometer: Displays the mileage driven since the recording began.

Track:

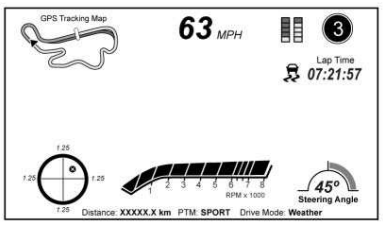

4477290

Displays these vehicle metrics:

- Vehicle Speed: Same as Sport.
- GPS Tracking Map: Shows the vehicle's current position relative to a known route.
- Engine Rotations Per Minute (RPMs): Same as Sport.
- Transmission State (Current Gear): Same as Sport.
- Friction Bubble Graphic: Lateral and longitudinal G-Forces are displayed as a dot within a bubble. A red dot displays when the vehicle starts braking and turns green when the vehicle accelerates. The dot is white when the vehicle is not moving. A white dot is the default.
- Brake and Throttle Graphic: Displays the percentage value of brake and throttle pedal position from 0–100%.
- Steering Angle: The graphic fills from the center to the left or right depending on the direction of steering. The numerical steering angle displays below the graphic.
- StabiliTrak Active Indicator: The graphic only displays if the active handling systems are activated.
- Performance Traction Management (PTM) Mode: Displays the current PTM mode. The options are Wet, Dry, Sport 1, Sport 2, or Race.
- Current Lap Time: Displays the elapsed lap time if the finish line is defined and the vehicle has crossed the defined finish line at least once.
- Event Odometer: Displays the mileage driven since the recording began.
- Drive Mode: Displays the vehicle's current drive mode.

Performance Timing:

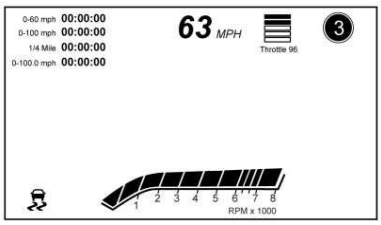

4477332

Displays these vehicle metrics:

- Vehicle Speed: Same as Sport.
- Engine Rotations Per Minute (RPMs): Same as Sport.
- Transmission State (Current Gear): Same as Sport.
- 0–100 km/h (0–60 mph), 0–200 km/h (0–100 mph), 400 m (1/4 mi), and 0–200–0 km/h (0–100–0 mph): The timer starts recording as soon as the vehicle accelerates. As the vehicle passes each speed and distance milestone, it is displayed on the overlay.
- Throttle Position: Displays the percentage of throttle applied from 0–100%.
- StabiliTrak Active Indicator: The graphic only displays if the active handling systems are activated.

Naming Convention

The recorded video file name is stored as the recorded date and the length of the recording.

If the recorded session was recorded while the system was in Valet Mode, the file name will display the mode, date, and length of time.

Settings

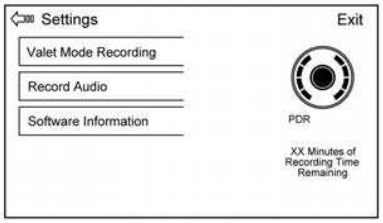

4522919

Touch the Settings button from the PDR menu to display settings.

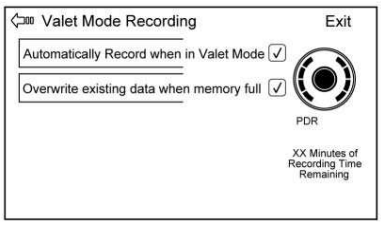

4522922

Valet Mode Recording : Allows recording preferences to be selected. It is recommended that a blank SD card be used. Available choices are:

- Automatically record when in Valet Mode: Enables the PDR to begin recording as soon as the vehicle is in Valet Mode.
- Overwrite existing data when memory full: Allows manual overwriting of previous recordings, one at a time starting with the oldest, when the current recording requires additional storage to continue.

Audio will not record during Valet Mode.

Cadillac CTS/CTS-V Owner Manual (GMNA-Localizing-U.S./Canada-2ndPrint-11254870) - 2017 - Final Review - 6/14/16

Record Audio : Allows audio to be recorded along with video.

Audio will not record during Valet Mode.

Software Information : Displays PDR software information and version numbers.

Toolbox Software : Allows for the evaluation of the driver and the vehicle performance on a personal computer after a recorded event. See your dealer for details.

Cadillac CTS/CTS-V Owner Manual (GMNA-Localizing-U.S./Canada-2ndPrint-11254870) - 2017 - Final Review - 6/14/16

Climate Controls

Climate Control Systems
Dual Automatic Climate Control System 190
Rear Climate Control System 195

Air Vents
Air Vents 197

Maintenance
Passenger Compartment Air Filter 198
Service 198

Climate Control Systems

Dual Automatic Climate Control System

Object-ID=4535294 Owner=Parker, Cynthia
LMD=10-Jun-2016 LMB=Parker, Cynthia

The climate control buttons and the touch screen are used to adjust the heating, cooling, and ventilation.

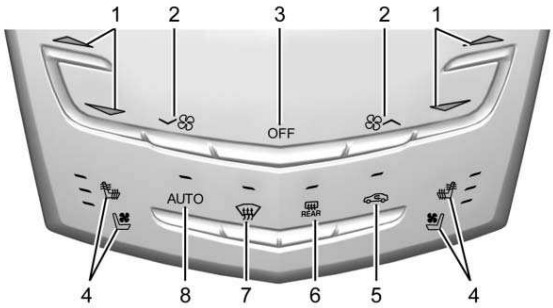

Climate Control Faceplate

4003127

1. Driver and Passenger Temperature Controls
2. Fan Control
3. OFF (Fan)
4. Driver and Passenger Heated and Ventilated Seats (If Equipped)

5. Recirculation
6. Rear Window Defogger
7. Defrost
8. AUTO (Automatic Operation)

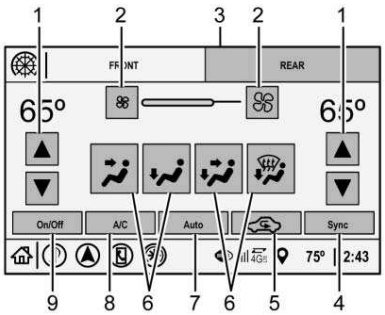

Climate Control Touch Screen

4535192

1. Driver and Passenger Temperature Controls
2. Fan Controls
3. Rear (Rear Climate Control Touch Screen)
4. SYNC (Synchronized Temperature)
5. Recirculation
6. Air Delivery Mode Control
7. Auto (Automatic Operation)
8. A/C (Air Conditioning)
9. On/Off

Climate Control Touch Screen

The fan, air delivery mode, air conditioning, recirculation, driver and passenger temperatures, AUTO, and SYNC settings can be controlled by touching CLIMATE on the infotainment home screen or climate status screen. A selection can then be made on the front climate control page displayed. See the infotainment manual.

Climate Control Status Screen

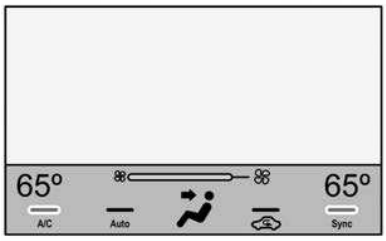

4535196

The climate control status screen appears briefly when the climate control buttons on the faceplate are adjusted.

Climate Control Function with Stop/Start (If Equipped)

The climate control system depends on other vehicle systems for heat and power input. The climate control system will balance stop/start efficiency with air conditioning comfort and defog operation. Certain climate control settings can result in fewer Auto Stops.

The following are climate control settings that result in fewer Auto Stops:

- The defrost mode.
- High fan speed settings.
- Extreme temperature settings.

For maximum air conditioning comfort, use the stop/start disable switch. See “Auto Engine Stop/Start” under *Starting the Engine* ⇨ *217*.

Automatic Operation

The system automatically controls the fan speed, air delivery, air conditioning, and recirculation in order to heat or cool the vehicle to the desired temperature.

When AUTO is lit, all four functions operate automatically. Each function can also be manually set and the selected setting is displayed. Functions not manually set will continue to be automatically controlled, even if the AUTO indicator is not lit.

For automatic operation:

1. Touch or press AUTO on the touch screen or faceplate.
2. Set the temperature. Allow the system time to stabilize. Then adjust the temperature as needed for best comfort.

To improve fuel efficiency and to cool the vehicle faster, recirculation may be automatically selected in warm weather. The recirculation light will not come on. Press to select recirculation; press it again to select outside air.

English units can be changed to metric units through the instrument cluster. See “Cluster Options Menu” under *Instrument Cluster* ⇨ *120*.

On/Off : Touch On/Off on the touch screen or press OFF on the faceplate to turn the fan on or off. The temperature control and air delivery mode can still be adjusted.

△ / ▽ **:** The temperature can be adjusted separately for the driver and the passenger. Press to increase or decrease the temperature. Press and hold to rapidly increase or decrease the temperature.

The driver and passenger temperatures can also be adjusted by touching the controls on the touch screen.

SYNC : Touch SYNC on the touch screen to link all climate zone settings to the driver settings. Adjust the driver side temperature control to change the linked temperature. When the passenger settings are adjusted, SYNC is no longer active and the temperatures are unlinked.

REAR : If equipped, touch REAR on the front climate control touch screen to open the rear climate control screen. The rear climate control settings can now be adjusted from the front passenger area.

Manual Operation

∧/∨ **:** Press ∧ or ∨ on the faceplate or touch the touch screen fan controls, to increase or decrease the fan speed. Press and hold the buttons or the touch screen control to adjust speed more quickly. The fan speed setting displays. Pressing either button cancels automatic fan control and the fan can be controlled manually. Touch or

press AUTO on the touch screen or faceplate to return to automatic operation. To turn off the fan, press and hold ∨ on the faceplate or decrease the fan speed on the touch screen until it turns off.

Air Delivery Mode Control : When the climate information is displayed, press the desired air delivery mode on the touch screen to change the direction of the airflow. The selected air delivery mode is lit. Touching any of the air delivery modes cancels automatic air delivery control and the direction of the airflow can be controlled manually. Touch or press AUTO on the touch screen or faceplate to return to automatic operation.

To change the current mode, select one of the following:

: Air is directed to the instrument panel outlets.

: Air is directed to the floor outlets.

: Air is divided between the instrument panel outlets and the floor outlets.

: Clears the windows of fog or moisture. Air is directed to the windshield and floor outlets.

: Clears the windshield of fog or frost more quickly. Air is directed to the windshield. Press on the faceplate to turn on or off. Changing the air delivery mode also turns the defrost off.

A/C : Touch A/C on the touch screen to turn the automatic air conditioning on or off. If the fan is turned off, the air conditioner will not run. Outside temperatures below freezing may also prevent the air conditioner from running.

Touch or press AUTO on the touch screen or faceplate to return to automatic operation and the air conditioner runs as needed.

Automatic Air Recirculation : When the AUTO indicator light is on, the air is automatically recirculated as needed to help quickly cool the inside of the vehicle.

The climate control system may have a sensor to detect air pollution. When using automatic air recirculation, the air quality control system may operate. To adjust the sensitivity of the air quality sensor, see “Climate and Air Quality” under *Vehicle Personalization* ⇨ *158*.

: Touch or press on the touch screen or faceplate to alternate between recirculating air inside the vehicle or pulling in outside air. The indicator light is lit when recirculation mode is active. This helps to quickly cool the air inside the vehicle or reduce the outside air and odors that might enter.

Touching or pressing cancels automatic recirculation. Touch or press AUTO on the touch screen or faceplate to return to automatic operation; recirculation runs automatically as needed.

Manual recirculation mode is not available when in Defrost or Defog modes.

Auto Defog : The climate control system may have a sensor to automatically detect high humidity inside the vehicle. When high humidity is detected, the climate control system may adjust to outside

air supply and turn on the air conditioner. If the climate control system does not detect possible window fogging, it returns to normal operation. To turn Auto Defog off or on, see “Climate and Air Quality” under *Vehicle Personalization* ⇨ *158*.

Rear Window Defogger

: Press to turn the rear window defogger on or off. An indicator light on the button comes on to show that the rear window defogger is on. The rear window defogger only works when the engine is running.

The rear window defogger can be set to automatic operation. See “Climate and Air Quality” under *Vehicle Personalization* ⇨ *158*. When Auto Rear Defog is selected, the rear window defogger turns on automatically when the interior temperature is about 4 °C (40 °F) and below.

The upper gridlines on the rear window are antenna lines and are not intended to heat when the defogger is activated.

The heated outside rearview mirrors turn on when the rear window defogger button is on and help to clear fog or frost from the surface of the mirrors.

Caution

Object-ID=3216580 LMD=26-Nov-2012

Do not try to clear frost or other material from the inside of the front windshield and rear window with a razor blade or anything else that is sharp. This may damage the rear window defogger grid and affect the radio's ability to pick up stations clearly. The repairs would not be covered by the vehicle warranty.

Driver and Passenger Heated and Ventilated Seats : If equipped, press or to heat the driver or passenger seat cushion and seatback.

Press or to ventilate the driver or passenger seat.

The vehicle also has auto heated seats that turn on when the vehicle is on. The seats will activate at the level required by the vehicle’s interior temperature. To turn off, press or . The auto heated seats can be turned on or off. See *Vehicle Personalization* ⇨ *158* and *Heated and Ventilated Seats* ⇨ *14*.

Remote Start Climate Control Operation : If equipped with the remote start feature, the climate control system may run when the vehicle is started remotely. The system uses the driver’s previous settings to heat or cool the inside of the vehicle. The rear defog may come on during remote start based on cold ambient conditions. The rear defog indicator light does not come on during a remote start. If equipped with heated or ventilated seats, they may come on

during a remote start. See *Remote Vehicle Start* ⇨ *38* and *Heated and Ventilated Seats* ⇨ *14*.

Sensor

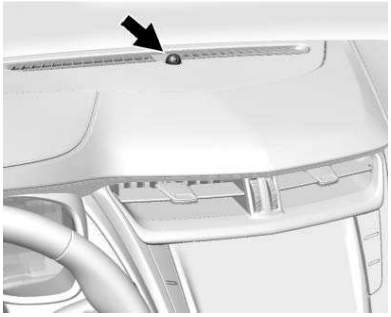

3229364

The solar sensor, on top of the instrument panel near the windshield, monitors the solar heat.

The climate control system uses the sensor information to adjust the temperature, fan speed, recirculation, and air delivery mode for best comfort.

If the sensor is covered, the automatic climate control system may not work properly.

Air Quality Sensor

If equipped with an air quality sensor, the climate control system adjusts to limit some exhaust fumes from being pulled inside the vehicle.

Press the AUTO button on the climate control to activate the air quality sensor. Recirculation is automatically selected when poor quality air is detected. The air quality sensor will not maintain recirculation for an extended period to prevent the air inside the vehicle from becoming too dry or stuffy.

Under certain conditions, the air quality sensor will not activate, such as during cold weather or with extreme odors. Press to activate recirculation.

The air quality sensor system does not protect against carbon monoxide (CO), which you cannot see or smell. See *Engine Exhaust* ⇨ *223*. The air quality sensor operation can be adjusted, See "Climate and Air Quality" under *Vehicle Personalization* ⇨ *158*.

Rear Climate Control System

Object-ID=4535298 Owner=Parker, Cynthia
LMD=10-Jun-2016 LMB=Parker, Cynthia

If equipped, the rear climate control system is on the rear of the center console. The settings can be adjusted with the rear climate control faceplate buttons and the touch screen.

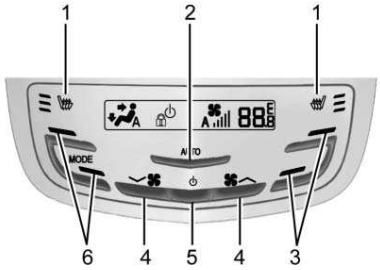

Rear Climate Control Faceplate

4032649

1. Heated Rear Seats (If Equipped)

2. AUTO (Automatic Operation)
3. Temperature Control
4. Fan Controls
5. ⏻ (On/Off)
6. MODE (Air Delivery Mode Control)

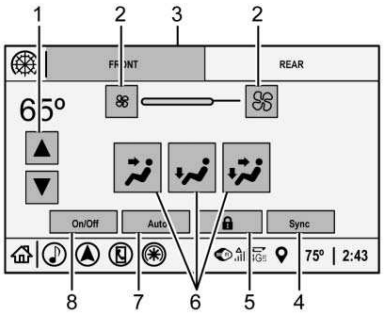

Rear Climate Touch Screen

4535194

1. Temperature Controls
2. Fan Controls
3. FRONT (Front Climate Control Touch Screen)
4. SYNC (Synchronized Temperatures)
5. Rear Control Lockout
6. Air Delivery Mode Controls
7. AUTO (Automatic Operation)
8. On/Off

REAR : Touch REAR on the front climate control touch screen to open the rear climate control screen. The rear climate control settings can now be adjusted from the front passenger area.

FRONT : Touch FRONT on the rear climate control touch screen to open the front climate control screen.

⏻ : Press ⏻ on the faceplate to turn the rear climate control on or off.

On/Off : Touch On/Off on the touch screen to turn the rear climate control on or off. To turn the system back on, press ⏻ on the faceplate and within five seconds press the MODE or temperature buttons on the faceplate.

SYNC : Touch SYNC on the touch screen to link the rear climate control temperature to the front climate control driver temperature. The SYNC button will be lit. If the rear climate control temperature setting is adjusted this unlinks the driver and rear temperatures. The SYNC button turns off.

🔒 : Touch 🔒 to lock or unlock control of the rear climate control system from the rear climate control faceplate. When locked, the rear climate control can only be adjusted from rear climate touch screen.

Automatic Operation

AUTO : Press to turn on or off. AUTO will be lit on the touch screen and will appear on the rear climate control faceplate. The air delivery and fan speed is controlled automatically.
If the air delivery mode or fan speed setting is manually adjusted, this cancels full automatic operation. The AUTO indicator will not be lit.

Manual Operation

Fan Controls : Touch on the touch screen to increase or decrease the rear climate airflow. Press or press and hold ∧ or ∨ on the faceplate to increase or decrease the rear climate airflow.

Cadillac CTS/CTS-V Owner Manual (GMNA-Localizing-U.S./Canada-2ndPrint-11254870) - 2017 - Final Review - 6/14/16

▲/▼ **:** Touch or press ▲ or ▼ on the touch screen or the rear faceplate to increase or decrease the rear passenger temperature.

/ / **:** Touch , , on the touch screen or press MODE on the rear faceplate to change the direction of the airflow in the rear seating area.

or : If equipped, press or to heat the left or right outboard seat cushion and seatback. See *Heated Rear Seats* ⇨ *68*.

Air Vents

Object-ID=2741532 Owner=Parker, Cynthia
LMD=06-Apr-2015 LMB=Parker, Cynthia

Adjustable air vents are in the center and on the side of the instrument panel.

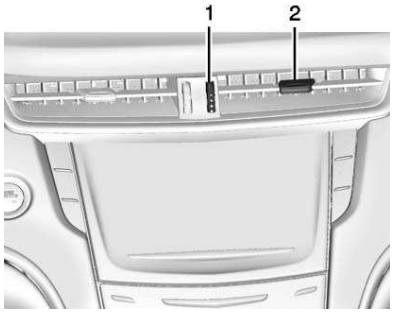

2741549

1. Thumbwheel
2. Slider Knob

Use the thumbwheels (1) near the air vents to open or close off the airflow.

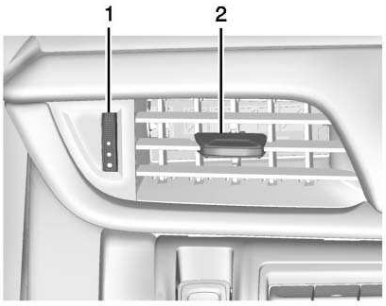

2741550

Move the slider knobs (2) to change the direction of the airflow.

Additional air vents are beneath the windshield and the driver and passenger side door windows. These are fixed and cannot be adjusted.

Operation Tips

- Clear away any ice, snow, or leaves from air inlets at the base of the windshield that could block the flow of air into the vehicle.
- Keep the path under the front seats clear of objects to help circulate the air inside of the vehicle more effectively.

- Use of non-GM approved hood deflectors can adversely affect the performance of the system. Check with your dealer before adding equipment to the outside of the vehicle.
- Do not attach any devices to the air vent slats. This restricts airflow and may cause damage to the air vents.

Maintenance

Passenger Compartment Air Filter

Object-ID=2538818 Owner=Parker, Cynthia LMD=12-Dec-2014 LMB=Rocha, Wendy

The filter reduces dust, pollen, and other airborne irritants from outside air that is pulled into the vehicle. The filter should be replaced as part of routine scheduled maintenance. See *Maintenance Schedule* ⇨ *364*.

See your dealer regarding replacement of the filter.

Service

Object-ID=3331630 Owner=Parker, Cynthia LMD=13-Jan-2015 LMB=Rocha, Wendy

All vehicles have a label underhood that identifies the refrigerant used in the vehicle. The refrigerant system should only be serviced by trained and certified technicians. The air conditioning evaporator should never be repaired or replaced by one from a salvage vehicle. It should only be replaced by a new evaporator to ensure proper and safe operation.

During service, all refrigerants should be reclaimed with proper equipment. Venting refrigerants directly to the atmosphere is harmful to the environment and may also create unsafe conditions based on inhalation, combustion, frostbite, or other health-based concerns.

Cadillac CTS/CTS-V Owner Manual (GMNA-Localizing-U.S./Canada-2ndPrint-11254870) - 2017 - Final Review - 6/14/16

Driving and Operating

Driving Information

Distracted Driving 200
Defensive Driving 201
Drunk Driving 201
Control of a Vehicle 201
Braking 201
Steering 202
Off-Road Recovery 203
Loss of Control 203
Track Events and Competitive Driving 204
Driving on Wet Roads 208
Hill and Mountain Roads 209
Winter Driving 209
If the Vehicle Is Stuck 211
Vehicle Load Limits 211

Starting and Operating

New Vehicle Break-In 215
Composite Materials 215
Ignition Positions 216
Starting the Engine 217
Retained Accessory Power (RAP) 219
Engine Coolant Heater 220
Shifting Into Park 221
Shifting out of Park 222
Parking over Things That Burn 222
Extended Parking 222

Engine Exhaust

Engine Exhaust 223
Running the Vehicle While Parked 223

Automatic Transmission

Automatic Transmission 224
Manual Mode 226

Drive Systems

All-Wheel Drive 227

Brakes

Antilock Brake System (ABS) 227
Electric Parking Brake 228
Brake Assist 229

Ride Control Systems

Traction Control/Electronic Stability Control 230
Driver Mode Control 231
Competitive Driving Mode 235
Limited-Slip Differential (Except V-Sport and V-Series) 237
Limited-Slip Differential (V-Sport and V-Series Only) 238

Cruise Control

Cruise Control 238
Adaptive Cruise Control 240

Driver Assistance Systems

Driver Assistance Systems 249
Assistance Systems for Parking or Backing 250
Assistance Systems for Driving 256
Forward Collision Alert (FCA) System 257
Forward Automatic Braking (FAB) 259
Side Blind Zone Alert (SBZA) 261
Lane Change Alert (LCA) 261
Lane Departure Warning (LDW) 263
Lane Keep Assist (LKA) 263
Vehicle-to-Vehicle 265

Fuel

Fuel 267
California Fuel Requirements 268
Fuels in Foreign Countries 269
Fuel Additives 269
Filling the Tank 269
Filling a Portable Fuel Container 270

Trailer Towing

General Towing Information 271

Driving Characteristics and Towing Tips 271
Trailer Towing (V6 Engine) 274
Trailer Towing (L4, V-Series, and Twin Turbo) 275
Towing Equipment (V6 Engine) 275
Towing Equipment (L4, V-Series, and Twin Turbo) 275

Conversions and Add-Ons

Add-On Electrical Equipment ... 276

Driving Information

Distracted Driving

Object-ID=4494948 Owner=Perkins, Frank LMD=13-Apr-2016 LMB=Perkins, Frank

Distraction comes in many forms and can take your focus from the task of driving. Exercise good judgment and do not let other activities divert your attention away from the road. Many local governments have enacted laws regarding driver distraction. Become familiar with the local laws in your area.

To avoid distracted driving, keep your eyes on the road, keep your hands on the steering wheel, and focus your attention on driving.

- Do not use a phone in demanding driving situations. Use a hands-free method to place or receive necessary phone calls.
- Watch the road. Do not read, take notes, or look up information on phones or other electronic devices.
- Designate a front seat passenger to handle potential distractions.
- Become familiar with vehicle features before driving, such as programming favorite radio stations and adjusting climate control and seat settings. Program all trip information into any navigation device prior to driving.
- Wait until the vehicle is parked to retrieve items that have fallen to the floor.
- Stop or park the vehicle to tend to children.
- Keep pets in an appropriate carrier or restraint.
- Avoid stressful conversations while driving, whether with a passenger or on a cell phone.

⚠ Warning

Object-ID=2531860 LMD=16-Sep-2010

Taking your eyes off the road too long or too often could cause a crash resulting in injury or death. Focus your attention on driving.

See the infotainment manual for information on that system or the navigation system, if equipped, including pairing and using a cell phone.

Defensive Driving

Object-ID=2531920 Owner=Perkins, Frank
LMD=22-Sep-2015 LMB=Perkins, Frank

Defensive driving means "always expect the unexpected." The first step in driving defensively is to wear the safety belt. See *Safety Belts* ⇨ *69*.

- Assume that other road users (pedestrians, bicyclists, and other drivers) are going to be careless and make mistakes. Anticipate what they might do and be ready.
- Allow enough following distance between you and the driver in front of you.
- Focus on the task of driving.

Drunk Driving

Object-ID=2527660 Owner=Perkins, Frank
LMD=22-Sep-2015 LMB=Perkins, Frank

Death and injury associated with drinking and driving is a global tragedy.

⚠ Warning

Object-ID=2208305 LMD=20-Oct-2011

Drinking and then driving is very dangerous. Your reflexes, perceptions, attentiveness, and judgment can be affected by even a small amount of alcohol. You can have a serious — or even fatal — collision if you drive after drinking.

Do not drink and drive or ride with a driver who has been drinking. Ride home in a cab; or if you are with a group, designate a driver who will not drink.

Control of a Vehicle

Object-ID=2527995 Owner=Perkins, Frank
LMD=22-Sep-2015 LMB=Perkins, Frank

Braking, steering, and accelerating are important factors in helping to control a vehicle while driving.

Braking

Object-ID=2528000 Owner=Perkins, Frank
LMD=22-Sep-2015 LMB=Perkins, Frank

Braking action involves perception time and reaction time. Deciding to push the brake pedal is perception time. Actually doing it is reaction time.

Average driver reaction time is about three-quarters of a second. In that time, a vehicle moving at 100 km/h (60 mph) travels 20 m (66 ft), which could be a lot of distance in an emergency.

Helpful braking tips to keep in mind include:

- Keep enough distance between you and the vehicle in front of you.
- Avoid needless heavy braking.

- Keep pace with traffic.

If the engine ever stops while the vehicle is being driven, brake normally but do not pump the brakes. Doing so could make the pedal harder to push down. If the engine stops, there will be some power brake assist but it will be used when the brake is applied. Once the power assist is used up, it can take longer to stop and the brake pedal will be harder to push.

Steering

Object-ID=4079173 Owner=Perkins, Frank
LMD=24-Sep-2015 LMB=Perkins, Frank

Variable Effort Steering

Some vehicles have a steering system that varies the amount of effort required to steer the vehicle in relation to the speed of the vehicle.

The amount of steering effort required is less at slower speeds to make the vehicle more maneuverable and easier to park. At faster speeds, the steering effort increases to provide a sport-like feel to the steering. This provides maximum control and stability.

Electric Power Steering

The vehicle has electric power steering. It does not have power steering fluid. Regular maintenance is not required.

If power steering assist is lost due to a system malfunction, the vehicle can be steered, but may require increased effort. See your dealer if there is a problem.

If the steering wheel is turned until it reaches the end of its travel and is held against that position for an extended period of time, power steering assist may be reduced.

If steering assist is used for an extended period of time, power assist may be reduced.

Normal use of the power steering assist should return when the system cools down.

See specific vehicle steering messages under *Vehicle Messages* ⇨ *147*.

See your dealer if there is a problem.

Curve Tips

- Take curves at a reasonable speed.
- Reduce speed before entering a curve.
- Maintain a reasonable steady speed through the curve.
- Wait until the vehicle is out of the curve before accelerating gently into the straightaway.

Steering in Emergencies

- There are some situations when steering around a problem may be more effective than braking.
- Holding both sides of the steering wheel allows you to turn 180 degrees without removing a hand.
- Antilock Brake System (ABS) allows steering while braking.

Off-Road Recovery

Object-ID=2528011 Owner=Perkins, Frank
LMD=22-Sep-2015 LMB=Perkins, Frank

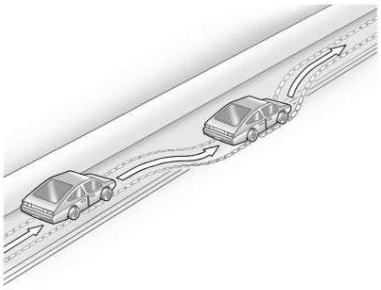

1966764

The vehicle's right wheels can drop off the edge of a road onto the shoulder while driving. Follow these tips:

1. Ease off the accelerator and then, if there is nothing in the way, steer the vehicle so that it straddles the edge of the pavement.
2. Turn the steering wheel about one-eighth of a turn, until the right front tire contacts the pavement edge.
3. Turn the steering wheel to go straight down the roadway.

Loss of Control

Object-ID=2528022 Owner=Perkins, Frank
LMD=22-Sep-2015 LMB=Perkins, Frank

Skidding

There are three types of skids that correspond to the vehicle's three control systems:

- Braking Skid — wheels are not rolling.
- Steering or Cornering Skid — too much speed or steering in a curve causes tires to slip and lose cornering force.
- Acceleration Skid — too much throttle causes the driving wheels to spin.

Defensive drivers avoid most skids by taking reasonable care suited to existing conditions, and by not overdriving those conditions. But skids are always possible.

If the vehicle starts to slide, follow these suggestions:

- Ease your foot off the accelerator pedal and steer the way you want the vehicle to go. The vehicle may straighten out. Be ready for a second skid if it occurs.
- Slow down and adjust your driving according to weather conditions. Stopping distance can be longer and vehicle control can be affected when traction is reduced by water, snow, ice, gravel, or other material on the road. Learn to recognize warning clues — such as enough water, ice, or packed snow on the road to make a mirrored surface — and slow down when you have any doubt.
- Try to avoid sudden steering, acceleration, or braking, including reducing vehicle speed by shifting to a lower gear. Any sudden changes could cause the tires to slide.

Remember: Antilock brakes help avoid only the braking skid.

Track Events and Competitive Driving

Object-ID=4002640 Owner=Dobson, Bert LMD=01-Mar-2016 LMB=Dobson, Bert

Track events and competitive driving may affect the vehicle warranty. See the warranty manual before using the vehicle for competitive driving.

Caution

Object-ID=2920000 LMD=06-Mar-2014

If the vehicle is used for track events and competitive driving, the engine may use more oil than it would with normal use. Low oil levels can damage the engine. Check the oil level often and maintain the proper level. See *Engine Oil* ⇨ *288*.

Axle Fluid

Axles must have 805 km (500 mi) before being used in track driving.

The front, if equipped with AWD, and rear axle fluid temperatures may be higher than when driving in severe conditions. Drain and refill with new fluid after the first racing or competitive driving event, and then after every 24 hours of racing or competitive driving. See *Recommended Fluids and Lubricants* ⇨ *372*.

Caution

Object-ID=4168736 LMD=23-Apr-2015

During a first time track or racing event, high axle temperatures can occur. Damage could be caused to the axle and would not be covered by the vehicle warranty. Do not drive as long or as fast the first time the vehicle is driven on the track or raced.

Engine Oil

2.0L (LTG) Engine

This is not available with a track package option and is not recommended for track use.

3.6L Non-Turbo (LGX) Engine

- With Oil Cooler: Confirm the oil level is at the upper mark that shows the proper operating range on the engine oil dipstick.
- Without Oil Cooler: Do not use for track events and competitive driving.

3.6L Twin Turbo (LF3) Engine

This requires premium fuel, and comes standard with a 7 qt sump, integrated oil cooler, and other powertrain and powertrain cooling components in preparation for track use.

6.2L Supercharged (LT4) Engine

Change the engine oil to 0W-40 or 5W-40 that meets the dexos2 ™ specification. If this oil is not available, the following oils can be used as an alternative: Valvoline® SYNPOWER MST 5W-40, Mobil® 1 ESP Formula M 5W-40. See *Capacities and Specifications* ⇨ *379*.

This requires premium fuel, and comes standard with a 10 qt sump, air/oil separator, integrated oil cooler, and other powertrain and powertrain cooling components in preparation for track use.

Check the oil level often during track events and competitive driving and keep the oil level at or near the upper mark.

Automatic Transmission Fluid

Have the transmission fluid set to the track specific oil level prior to track usage. Transmission fluid should be changed after 30 hours of track usage. Any transmission level set or change should be performed at your dealer.

Brake Fluid

For track events and competitive driving, it is recommended that the brake fluid be replaced with a high performance brake fluid that has a dry boiling point greater than 279 °C (534 °F). After conversion to the high performance brake fluid, follow the brake fluid service recommendations outlined by the fluid manufacturer. Do not use silicone or DOT-5 brake fluids.

Caution

Object-ID=3352665 LMD=10-Jul-2013

Removing the splash shield can degrade wet braking performance, as well as introduce brake pedal pulsation, due to brake disc exposure to road debris. Only remove the front brake disc splash shield and front tire deflector when driving in track events.

Brake cooling can be improved if the front brake disc splash shield and front tire deflector are removed. Removing the shield will require that the suspension bushings visible to the brake disc be protected with insulated thermal wrapping.

Brake Burnishing

To prepare the V-Sport and V-Series brake systems for track events and racing, complete the appropriate high performance brake burnishing procedure described below.

V-Sport and V-Series Brake Burnishing

New brake pads must be burnished before racing or other competitive driving.

Caution

Object-ID=4086485 LMD=20-Feb-2015

These procedures are specific to the V-Sport and V-Series brake package. This procedure should not be run on other models as damage may result.

Caution

Object-ID=3285670 LMD=20-May-2015

The new vehicle break-in period should be completed before performing the brake burnishing procedure or damage may occur to the powertrain/engine. See *New Vehicle Break-In* ⇨ *215*.

When performed as instructed, this procedure will not damage the brakes. During the burnishing procedure, the

brake pads will smoke and produce an odor. The braking force and pedal travel may increase. After the procedure is complete, the brake pads may appear white at the rotor contact.

Run this procedure in a safe manner and in compliance with all local and state ordinances/laws regarding motor vehicle operation. Run this procedure only on dry pavement.

Racing/Track Brake Burnishing Procedure

Caution

Object-ID=3285673 LMD=13-Mar-2013

Brake pedal fade will occur during this track burnish procedure and can cause brake pedal travel and force to increase. This could extend stopping distance until the brakes are fully burnished.

1. Apply the brakes 25 times starting at 100 km/h (60 mph) to 50 km/h (30 mph) while decelerating at 0.4 g. This is a medium brake application. Drive for at least 1 km (0.6 mi) between applying the brakes. This first step may be skipped if there are more than 320 km (200 mi) on the brake pads.
2. Repeatedly apply the brakes from 100 km/h (60 mph) to 25 km/h (15 mph) while decelerating at 0.8 g. This is a hard brake application, without activating the Antilock Brake System (ABS). Drive for at least 1 km (0.6 mi) between stops. Repeat until the brake pedal travel starts to increase. Depending on conditions, this should take no longer than 25 brake applications.
3. Cool down: Drive at 100 km/h (60 mph) for approximately 15 km (10 mi) without using the brakes.
4. Apply the brakes 25 times from 100 km/h (60 mph) to 50 km/h (30 mph) while decelerating at 0.4 g. This is a medium brake application. Drive for at least 1 km (0.6 mi) between applications.

Brake Cooling

On V-Series, remove front tire deflectors if equipped, before track driving for optimized brake cooling.

Wheel Alignment (V-Series Only)

Wheel alignment suggested specs for track use:

- Front: -2.0 deg camber, 0.2 deg total toe
- Rear: -1.7 deg camber, 0.2 deg total toe

V-Series Vehicles Equipped with the Original Equipment Tires

Follow the requirements and recommendations for tire inflation pressures while driving on various types of tracks/courses. This helps to achieve a well-balanced vehicle and enhance tire traction performance.

Use good judgment to determine the appropriate tire inflation pressure and speeds for the track/course configuration and environmental conditions. Contact the tire manufacturer if further assistance is needed.

To maximize tire life, drive 805 km (500 mi) prior to racetrack driving or complete the minimum track running that will increase the tire pressures by 35 kPa (5 psi). After this, immediately let the tires cool to cold pressures.

Tire Inflation Pressure Guidelines

Tire inflation pressures affect vehicle handling and tire life, and should be adjusted for various types of tracks/courses.

Inspect the tires prior to every track/course session. Track/course driving will reduce the tire tread life.

Driving and Operating

⚠ Warning

Object-ID=4143962 LMD=04-Nov-2015

Operating the vehicle at high speeds can be dangerous. Improper tire inflation pressure can put additional strain on the tires and can cause a sudden failure. Make sure the tires are in excellent

(Continued)

Warning (Continued)

Object-ID=4143962 LMD=04-Nov-2015

condition, and use the correct cold tire inflation pressure for the vehicle load and track/course.

⚠ Warning

Object-ID=4143982 LMD=04-Nov-2015

Tracks/courses put high loads on tires operating at high speed, which can lead to tire failure if not inflated properly. Always limit vehicle cargo to the driver plus one passenger with no additional cargo.

⚠ Warning

Object-ID=4299237 LMD=13-Jan-2016

Track/course loads wear tires both on the tread and internal to the tire. When driven in track/course conditions, even if tread is not worn down to the treadwear indicator,

(Continued)

Warning (Continued)

Object-ID=4299237 LMD=13-Jan-2016

tires must be replaced after the equivalent of two tanks of fuel or approximately 160 km (100 mi).

Tire Inflation Pressure for Tracks with Sustained High-Speed Operation on Banked Turns

(e.g., Daytona International Speedway, Indianapolis Motor Speedway, or similar)

Inflate tires to a minimum of 300 kPa (44 psi) when cold.

Do not reduce tire inflation pressure when hot.

Tire Inflation Pressure for Tracks with Combined High-Speed and High-Load Corners

(e.g., Nurburgring Nordschliefe, Spa Francorchamps, or similar)

Inflate tires to a minimum of 260 kPa (38 psi) when cold.

Limit vehicle speed to below 230 km/h (143 mph) until 290 kPa (42 psi) is reached.

For continuous track use, hot tire inflation pressure may be adjusted to a minimum of 290 kPa (42 psi).

Tire Inflation Pressure for Road/Street Courses

(e.g., Virginia International Raceway, Road Atlanta, or similar)

Inflate tires to a minimum of 240 kPa (35 psi) cold.

For continuous road/street course use, hot tire inflation pressure may be adjusted to a minimum of 270 kPa (39 psi).

Return the tires to the recommended cold tire inflation pressure when high-speed driving has ended. See *Vehicle Load Limits* ⇨ *211* and *Tire Pressure* ⇨ *325*.

Driving on Wet Roads

Object-ID=2157061 Owner=Perkins, Frank LMD=22-Sep-2015 LMB=Perkins, Frank

Rain and wet roads can reduce vehicle traction and affect your ability to stop and accelerate. Always drive slower in these types of driving conditions and avoid driving through large puddles and deep-standing or flowing water.

⚠ Warning

Object-ID=2209577 LMD=19-May-2010

Wet brakes can cause crashes. They might not work as well in a quick stop and could cause pulling to one side. You could lose control of the vehicle.

After driving through a large puddle of water or a car/vehicle wash, lightly apply the brake pedal until the brakes work normally.

Flowing or rushing water creates strong forces. Driving through flowing water could cause the vehicle to be carried away. If this happens, you and other vehicle

(Continued)

Warning (Continued)

Object-ID=2209577 LMD=19-May-2010

occupants could drown. Do not ignore police warnings and be very cautious about trying to drive through flowing water.

Hydroplaning

Hydroplaning is dangerous. Water can build up under the vehicle's tires so they actually ride on the water. This can happen if the road is wet enough and you are going fast enough. When the vehicle is hydroplaning, it has little or no contact with the road.

There is no hard and fast rule about hydroplaning. The best advice is to slow down when the road is wet.

Other Rainy Weather Tips

Besides slowing down, other wet weather driving tips include:

- Allow extra following distance.
- Pass with caution.
- Keep windshield wiping equipment in good shape.

- Keep the windshield washer fluid reservoir filled.
- Have good tires with proper tread depth. See *Tires* ➪ *318*.
- Turn off cruise control.

Hill and Mountain Roads

Object-ID=3961827 Owner=Perkins, Frank
LMD=22-Sep-2015 LMB=Perkins, Frank

Driving on steep hills or through mountains is different than driving on flat or rolling terrain. Tips include:

- Keep the vehicle serviced and in good shape.
- Check all fluid levels and brakes, tires, cooling system, and transmission.
- Shift to a lower gear when going down steep or long hills.

⚠ Warning

Object-ID=2909766 LMD=10-Dec-2012

Using the brakes to slow the vehicle on a long downhill slope can cause brake overheating, can reduce brake

(Continued)

Warning (Continued)

Object-ID=2909766 LMD=10-Dec-2012

performance, and could result in a loss of braking. Shift the transmission to a lower gear to let the engine assist the brakes on a steep downhill slope.

⚠ Warning

Object-ID=2909778 LMD=18-Sep-2012

Coasting downhill in N (Neutral) or with the ignition off is dangerous. This can cause overheating of the brakes and loss of steering. Always have the engine running and the vehicle in gear.

- Drive at speeds that keep the vehicle in its own lane. Do not swing wide or cross the center line.
- Be alert on top of hills; something could be in your lane (e.g., stalled car, accident).
- Pay attention to special road signs (e.g., falling rocks area, winding roads, long grades, passing or no-passing zones) and take appropriate action.

Winter Driving

Object-ID=3997928 Owner=Perkins, Frank
LMD=24-Sep-2015 LMB=Perkins, Frank

Driving on Snow or Ice

Snow or ice between the tires and the road creates less traction or grip, so drive carefully. Wet ice can occur at about 0 °C (32 °F) when freezing rain begins to fall. Avoid driving on wet ice or in freezing rain until roads can be treated.

For slippery road driving:

- Accelerate gently. Accelerating too quickly causes the wheels to spin and makes the surface under the tires slick.
- Turn on Traction Control. See *Traction Control/Electronic Stability Control* ➪ *230*.

- Antilock Brake System (ABS) improves vehicle stability during hard stops, but the brakes should be applied sooner than when on dry pavement. See *Antilock Brake System (ABS)* ⇨ *227*.

  See *Driver Mode Control* ⇨ *231*
- Allow greater following distance and watch for slippery spots. Icy patches can occur on otherwise clear roads in shaded areas. The surface of a curve or an overpass can remain icy when the surrounding roads are clear. Avoid sudden steering maneuvers and braking while on ice.
- Turn off cruise control.

Blizzard Conditions

Stop the vehicle in a safe place and signal for help. Stay with the vehicle unless there is help nearby. If possible, use Roadside Service. See *Roadside Service (US/CAN)* ⇨ *388* or *Roadside Service (MEXICO)* ⇨ *390*. To get help and keep everyone in the vehicle safe:

- Turn on the hazard warning flashers.
- Tie a red cloth to an outside mirror.

⚠ Warning

Object-ID=3965263 LMD=03-Jun-2015

Snow can trap engine exhaust under the vehicle. This may cause exhaust gases to get inside. Engine exhaust contains carbon monoxide (CO), which cannot be seen or smelled. It can cause unconsciousness and even death.

If the vehicle is stuck in snow:

- Clear snow from the base of the vehicle, especially any blocking the exhaust pipe.
- Open a window about 5 cm (2 in) on the vehicle side that is away from the wind, to bring in fresh air.
- Fully open the air outlets on or under the instrument panel.

(Continued)

Warning (Continued)

Object-ID=3965263 LMD=03-Jun-2015

- Adjust the climate control system to circulate the air inside the vehicle and set the fan speed to the highest setting. See “Climate Control Systems.”

For more information about CO, see *Engine Exhaust* ⇨ *223*.

To save fuel, run the engine for short periods to warm the vehicle and then shut the engine off and partially close the window. Moving about to keep warm also helps.

If it takes time for help to arrive, when running the engine, push the accelerator pedal slightly so the engine runs faster than the idle speed. This keeps the battery charged to restart the vehicle and to signal for help with the headlamps. Do this as little as possible, to save fuel.

If the Vehicle Is Stuck

Object-ID=2845747 Owner=Perkins, Frank
LMD=18-Sep-2015 LMB=Perkins, Frank

Slowly and cautiously spin the wheels to free the vehicle when stuck in sand, mud, ice, or snow.

If stuck too severely for the traction system to free the vehicle, turn the traction system off and use the rocking method. See *Traction Control/ Electronic Stability Control* ⇨ *230*.

⚠ Warning

Object-ID=2210316 LMD=28-Sep-2011

If the vehicle's tires spin at high speed, they can explode, and you or others could be injured. The vehicle can overheat, causing an engine compartment fire or other damage. Spin the wheels as little as possible and avoid going above 56 km/h (35 mph).

Rocking the Vehicle to Get it Out

Turn the steering wheel left and right to clear the area around the front wheels. Turn off any traction system. Shift back and forth between R (Reverse) and a low forward gear, spinning the wheels as little as possible. To prevent transmission wear, wait until the wheels stop spinning before shifting gears. Release the accelerator pedal while shifting, and press lightly on the accelerator pedal when the transmission is in gear. Slowly spinning the wheels in the forward and reverse directions causes a rocking motion that could free the vehicle. If that does not get the vehicle out after a few tries, it might need to be towed out. If the vehicle does need to be towed out, see *Towing the Vehicle* ⇨ *350*.

Vehicle Load Limits

Object-ID=2718537 Owner=Rosekrans, Dee
LMD=03-Jun-2015 LMB=Rosekrans, Dee

It is very important to know how much weight the vehicle can carry. This weight is called the vehicle capacity weight and includes the weight of all occupants, cargo, and all nonfactory-installed options. Two labels on the vehicle may show how much weight it may properly carry: the Tire and Loading Information label and the Certification label.

⚠ Warning

Object-ID=2208321 LMD=26-Mar-2015

Do not load the vehicle any heavier than the Gross Vehicle Weight Rating (GVWR), or either the maximum front or rear Gross Axle Weight Rating (GAWR). This can cause systems to break and change the way the vehicle handles. This could cause loss of control and a crash. Overloading can also reduce stopping distance, damage the tires, and shorten the life of the vehicle.

Tire and Loading Information Label

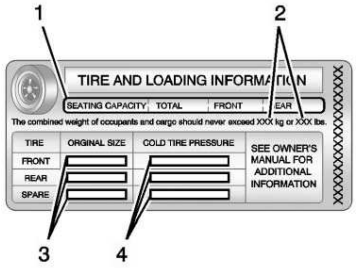

Label Example

2713862

A vehicle-specific Tire and Loading Information label is attached to the vehicle's center pillar (B-pillar). The Tire and Loading Information label shows the number of occupant seating positions (1), and the maximum vehicle capacity weight (2) in kilograms and pounds.

The Tire and Loading Information label also shows the tire size of the original equipment tires (3) and the recommended cold tire inflation pressures (4). For more information on tires and inflation see *Tires* ⇨ *318* and *Tire Pressure* ⇨ *325*.

There is also important loading information on the Certification label. It may show the Gross Vehicle Weight Rating (GVWR) and the Gross Axle Weight Rating (GAWR) for the front and rear axle. See “Certification Label” later in this section.

“Steps for Determining Correct Load Limit–

1. Locate the statement "The combined weight of occupants and cargo should never exceed XXX kg or XXX lbs." on your vehicle’s placard.
2. Determine the combined weight of the driver and passengers that will be riding in your vehicle.
3. Subtract the combined weight of the driver and passengers from XXX kg or XXX lbs.
4. The resulting figure equals the available amount of cargo and luggage load capacity. For example, if the "XXX" amount equals 1400 lbs. and there will be five 150 lb passengers in your vehicle, the amount of available cargo and luggage load capacity is 650 lbs. (1400-750 (5 x 150) = 650 lbs.)
5. Determine the combined weight of luggage and cargo being loaded on the vehicle. That weight may not safely exceed the available cargo and luggage load capacity calculated in Step 4.
6. If your vehicle will be towing a trailer, load from your trailer will be transferred to your vehicle. Consult this manual to determine how

Cadillac CTS/CTS-V Owner Manual (GMNA-Localizing-U.S./Canada-2ndPrint-11254870) - 2017 - Final Review - 6/14/16

this reduces the available cargo and luggage load capacity of your vehicle."

See *Trailer Towing (L4, V-Series, and Twin Turbo)* ⇨ *275* or *Trailer Towing (V6 Engine)* ⇨ *274* for important information on towing a trailer, towing safety rules, and trailering tips.

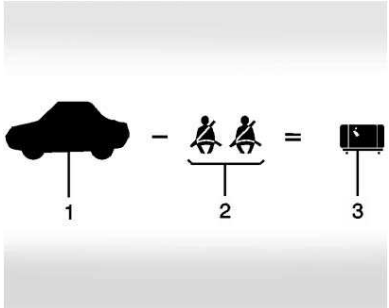

Example 1

2713863

1. Vehicle Capacity Weight for Example 1 = 453 kg (1,000 lbs).
2. Subtract Occupant Weight @ 68 kg (150 lbs) × 2 = 136 kg (300 lbs).
3. Available Occupant and Cargo Weight = 317 kg (700 lbs).

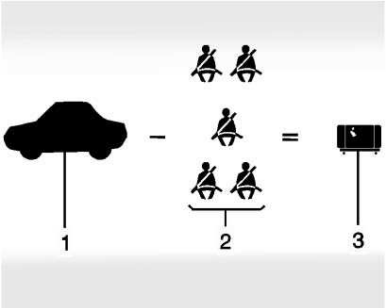

Example 2

2713865

1. Vehicle Capacity Weight for Example 2 = 453 kg (1,000 lbs).
2. Subtract Occupant Weight @ 68 kg (150 lbs) × 5 = 340 kg (750 lbs).
3. Available Cargo Weight = 113 kg (250 lbs).

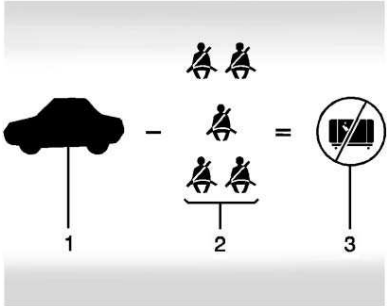

Example 3

2713867

1. Vehicle Capacity Weight for Example 3 = 453 kg (1,000 lbs).
2. Subtract Occupant Weight @ 91 kg (200 lbs) × 5 = 453 kg (1,000 lbs).
3. Available Cargo Weight = 0 kg (0 lbs).

Refer to the vehicle's Tire and Loading Information label for specific information about the

vehicle's capacity weight and seating positions. The combined weight of the driver, passengers, and cargo should never exceed the vehicle's capacity weight.

Certification Label

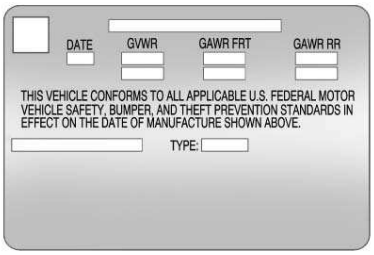

Label Example

1988859

A vehicle-specific Certification label is attached to the vehicle's center pillar (B-pillar). The label may show the gross weight capacity of the vehicle, called the Gross Vehicle Weight Rating (GVWR). The GVWR includes the weight of the vehicle, all occupants, fuel, and cargo.

⚠ Warning

Object-ID=2208386 LMD=30-Jun-2010

Things inside the vehicle can strike and injure people in a sudden stop or turn, or in a crash.

- Put things in the cargo area of the vehicle. In the cargo area, put them as far forward as possible. Try to spread the weight evenly.
- Never stack heavier things, like suitcases, inside the vehicle so that some of them are above the tops of the seats.
- Do not leave an unsecured child restraint in the vehicle.

(Continued)

Warning (Continued)

Object-ID=2208386 LMD=30-Jun-2010

- Secure loose items in the vehicle.
- Do not leave a seat folded down unless needed.

Starting and Operating

New Vehicle Break-In

Object-ID=3273003 Owner=Byrne, Matthew LMD=27-Aug-2015 LMB=Byrne, Matthew

Follow these recommended guidelines during the first 2 400 km (1,500 mi) of driving this vehicle. Parts have a break-in period and performance will be better in the long run.

For the first 2 400 km (1,500 mi):

- Avoid full throttle starts and abrupt stops.
- Do not exceed 4000 engine rpm.
- Avoid driving at any one constant speed, fast or slow.
- Avoid downshifting to brake or slow the vehicle when the engine speed will exceed 4000 rpm.
- Do not let the engine labor. Never lug the engine in high gear at low speeds.
- Do not participate in track events, sport driving schools, or similar activities during this break-in period.
- Check engine oil with every refueling and add if necessary. Oil and fuel consumption may be higher than normal during the first 2 400 km (1,500 mi).
- To break in new tires, drive at moderate speeds and avoid hard cornering for the first 300 km (200 mi). New tires do not have maximum traction and may tend to slip.
- New brake linings also need a break–in period. Avoid making hard stops during the first 300 km (200 mi). This is recommended every time brake linings are replaced.

Composite Materials

Object-ID=4483724 Owner=Byrne, Matthew LMD=30-Mar-2016 LMB=Byrne, Matthew

This vehicle may be equipped with parts containing carbon fiber, sheet-molding compound or other composite materials. Dealer-installed accessories may also contain composite materials. These parts and accessories may include the splitter or rocker extensions.

⚠ Warning

Object-ID=4483258 LMD=30-Mar-2016

Exposed edges of parts containing carbon fiber and other composite materials can be sharp. Contact with these parts could result in injury. Use caution to avoid contacting these parts, including when washing the vehicle. If the parts are damaged, replace the parts promptly with replacements from your dealer.

⚠ Warning

Object-ID=4483263 LMD=30-Mar-2016

Rocker extensions may break under pressure, resulting in property damage or injury. Do not stand on the rocker extension or use it as a step.

Ignition Positions

Object-ID=2964514 Owner=Byrne, Matthew
LMD=01-Sep-2015 LMB=Patchak, Roxanne

3218206

The vehicle has an electronic keyless ignition with pushbutton start.

Pressing the button cycles it through three modes: ACC/ACCESSORY, ON/RUN/START, and Stopping the Engine/OFF.

The Remote Keyless Entry (RKE) transmitter must be in the vehicle for the system to operate. If the pushbutton start is not working, the vehicle may be near a strong radio antenna signal causing interference to the Keyless Access system. See *Remote Keyless Entry (RKE) System Operation* ⇨ *32*.

To shift out of P (Park), the vehicle must be in ACC/ACCESSORY or ON/RUN, and the brake pedal must be applied.

Stopping the Engine/OFF (No Indicator Lights) : When the vehicle is stopped, press the ENGINE START/STOP button once to turn the engine off.

If the vehicle is in P (Park), the ignition will turn off, and Retained Accessory Power (RAP) will remain active. See *Retained Accessory Power (RAP)* ⇨ *219*.

If the vehicle is not in P (Park), the ignition will return to ACC/ACCESSORY and display a message in the Driver Information Center (DIC). See *Transmission Messages* ⇨ *157*. When the vehicle is shifted into P (Park), the ignition system will switch to OFF.

The vehicle may have an electric steering column lock. The lock is activated when the vehicle is switched to OFF and the driver door is opened. A sound may be heard as the lock actuates or releases. The steering column lock may not release with the wheels turned off center. If this happens, the vehicle may not start. Move the steering wheel from left to right while attempting to start the vehicle. If this does not work, the vehicle needs service.

Do not turn the engine off when the vehicle is moving. This will cause a loss of power assist in the brake and steering systems and disable the airbags.

If the vehicle must be shut off in an emergency:

1. Brake using a firm and steady pressure. Do not pump the brakes repeatedly. This may deplete power assist, requiring increased brake pedal force.
2. Shift the vehicle to N (Neutral). This can be done while the vehicle is moving. After shifting to N (Neutral), firmly apply the brakes and steer the vehicle to a safe location.

3. Come to a complete stop, shift to P (Park), and turn the ignition to OFF. On vehicles with an automatic transmission, the shift lever must be in P (Park) to turn the ignition switch to the OFF position.
4. Set the parking brake. See *Electric Parking Brake* ⇨ *228*.

⚠ Warning

Object-ID=2476492 LMD=24-May-2010

Turning off the vehicle while moving may cause loss of power assist in the brake and steering systems and disable the airbags. While driving, only shut the vehicle off in an emergency.

If the vehicle cannot be pulled over, and must be shut off while driving, press and hold the ENGINE START/STOP button for longer than two seconds, or press twice in five seconds.

ACC/ACCESSORY (Amber Indicator Light) : This mode allows you to use some electrical accessories when the engine is off.

With the ignition off, pressing the button one time without the brake pedal applied will place the ignition system in ACC/ACCESSORY.

The ignition will switch from ACC/ACCESSORY to OFF after five minutes to prevent battery rundown.

ON/RUN/START (Green Indicator Light) : This mode is for driving and starting. With the ignition off, and the brake pedal applied, pressing the button once will place the ignition system in ON/RUN/START. Once engine cranking begins, release the button. Engine cranking will continue until the engine starts. See *Starting the Engine* ⇨ *217*. The ignition will then remain in ON/RUN.

Service Only Mode

This power mode is available for service and diagnostics, and to verify the proper operation of the malfunction indicator lamp as may be required for emission inspection purposes. With the vehicle off, and the brake pedal not applied, pressing and holding the button for more than five seconds will place the vehicle in Service Only Mode. The instruments and audio systems will operate as they do in ON/RUN, but the vehicle will not be able to be driven. The engine will not start in Service Only Mode. Press the button again to turn the vehicle off.

Starting the Engine

Object-ID=4502490 Owner=Byrne, Matthew LMD=02-May-2016 LMB=Byrne, Matthew

Move the shift lever to P (Park) or N (Neutral). To restart the engine when the vehicle is already moving, use N (Neutral) only.

Caution

Object-ID=2867380 LMD=05-Jun-2012

Do not try to shift to P (Park) if the vehicle is moving. If you do, you could damage the transmission. Shift to P (Park) only when the vehicle is stopped.

Caution

Object-ID=2867381 LMD=05-Jun-2012

If you add electrical parts or accessories, you could change the way the engine operates. Any resulting damage would not be covered by the vehicle warranty. See *Add-On Electrical Equipment* ⇨ *276*.

Starting Procedure

1. With the Keyless Access system, the Remote Keyless Entry (RKE) transmitter must be in the vehicle. Press ENGINE START/STOP, if equipped, with the brake pedal applied. When the engine begins cranking, let go of the button.

   The idle speed will go down as the engine gets warm. Do not race the engine immediately after starting it.

   If the RKE transmitter is not in the vehicle, if there is interference, or if the RKE battery is low, a Driver Information Center (DIC) will display a message. See *Key and Lock Messages* ⇨ *150* and *Remote Keyless Entry (RKE) System Operation* ⇨ *32*.

Caution

Object-ID=2867383 LMD=05-Jun-2012

Cranking the engine for long periods of time, by returning the ignition to the START position immediately after cranking has ended, can overheat and damage the cranking motor, and drain the battery. Wait at least 15 seconds between each try, to let the cranking motor cool down.

2. If the engine does not start after five to 10 seconds, especially in very cold weather (below –18 °C or 0 °F), it could be flooded with too much gasoline. Try pushing the accelerator pedal all the way to the floor and holding it there as you press ENGINE START/STOP, if equipped. Wait at least 15 seconds between each try, to allow the cranking motor to cool down. When the engine starts, release the accelerator. If the vehicle starts briefly but then stops again, do the same thing. This clears the extra gasoline from the engine. Do not race the engine immediately after starting it. Operate the engine and transmission gently until the oil warms up and lubricates all moving parts.

Stop/Start System

⚠ Warning

Object-ID=3468943 LMD=10-Jun-2013

Exiting the vehicle without first shifting into P (Park) may cause the vehicle to move. You or others may be injured. Because the vehicle has the auto engine stop/start feature, the vehicle's engine might seem to be shut off; however, once the brake pedal is released, the engine will start up again.

Shift to P (Park) and turn the ignition to LOCK/OFF, before exiting the vehicle.

If equipped with the 2.0L L4, or 3.6L V6 non-turbo engine, the vehicle has a fuel saving stop/start system to shut off the engine to help conserve fuel.

Auto Engine Stop/Start

When the brakes are applied and the vehicle is at a complete stop, the engine may turn off. When stopped, the tachometer may display Auto Stop, or the Auto Stop light may come on in the instrument cluster. See *Tachometer* ⇨ *125* and *Auto Stop Mode (Uplevel Cluster Only)* ⇨ *138*. When the brake pedal is released or the accelerator pedal is pressed, the engine may restart.

Auto Stop may be deactivated if:

- A minimum vehicle speed is not reached.
- The engine or transmission is not at the required operating temperature.
- The outside temperature is not in the required operating range. Typically below –10 °C (14 °F) or above 50 °C (122 °F).
- The shift lever is in any gear other than D (Drive).
- The battery has been recently disconnected.
- The battery charge is low.
- The interior comfort level has not reached the required level for the climate control system or defog settings. See *Dual Automatic Climate Control System* ⇨ *190*.
- The Auto Stop time is greater than two minutes.

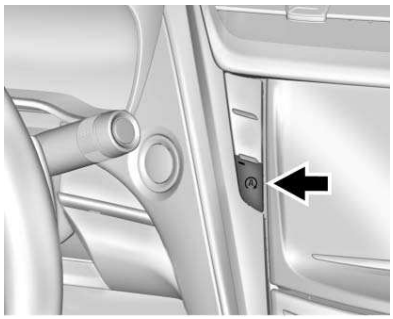

4084431

The automatic engine stop/start function can be disabled using the switch. The indicator on the switch will illuminate when the system is operational.

When Ⓐ comes on green in the instrument cluster, the system is active. The system is not active when it comes on white with a slash through it.

Retained Accessory Power (RAP)

Object-ID=3471958 Owner=Byrne, Matthew LMD=01-Feb-2016 LMB=Byrne, Matthew

These vehicle accessories can be used for up to 10 minutes after the engine is turned off:

- Audio System
- Power Windows
- Sunroof (if equipped)

Power to the audio system will work up to 10 minutes or until the driver door is opened. Power to the windows or sunroof will work up to 10 minutes or until any door is opened.

Engine Coolant Heater

Object-ID=3788632 Owner=Byrne, Matthew LMD=01-Sep-2015 LMB=Patchak, Roxanne

Vehicles with the engine coolant heater can use this option in cold weather conditions at or below –18 °C (0 °F) for easier starting and better fuel economy during engine warm-up. Plug in the coolant heater at least four hours before starting your vehicle. An internal thermostat in the plug-end of the cord may exist which will prevent engine coolant heater operation at temperatures above –18 °C (0 °F).

To Use the Engine Coolant Heater

1. Turn off the engine.
2. Open the hood and unwrap the electrical cord. The cord is clipped to the diagonal brace on the passenger side of the engine compartment.

   Check the heater cord for damage. If it is damaged, do not use it. See your dealer for a replacement. Inspect the cord for damage yearly.
3. Plug it into a normal, grounded 110-volt AC outlet.

⚠ Warning

Object-ID=3788565 LMD=25-Mar-2014

Improper use of the heater cord or an extension cord can damage the cord and may result in overheating and fire.

- Plug the cord into a three-prong electrical utility receptacle that is protected by a ground fault detection function. An ungrounded outlet could cause an electric shock.
- Use a weatherproof, heavy-duty, 15 amp-rated extension cord if needed. Failure to use the recommended extension cord in good operating condition, or using a damaged heater or extension cord, could make it

(Continued)

Warning (Continued)

Object-ID=3788565 LMD=25-Mar-2014

overheat and cause a fire, property damage, electric shock, and injury.

- Do not operate the vehicle with the heater cord permanently attached to the vehicle. Possible heater cord and thermostat damage could occur.
- While in use, do not let the heater cord touch vehicle parts or sharp edges. Never close the hood on the heater cord.
- Before starting the vehicle, unplug the cord, reattach the cover to the plug, and securely fasten the cord. Keep the cord away from any moving parts.

4. Before starting the engine, be sure to unplug and store the cord as it was before to keep it away from moving engine parts. If you do not, it could be damaged.

Contact your dealer for information on how long to use the heater in your particular area.

Shifting Into Park

Object-ID=2964540 Owner=Byrne, Matthew LMD=01-Sep-2015 LMB=Patchak, Roxanne

To shift into P (Park):

1. Hold the brake pedal down and set the parking brake.

   See *Electric Parking Brake* ⇨ *228*.

2. Move the shift lever into P (Park) by holding in the button on the shift lever and pushing the lever all the way toward the front of the vehicle.
3. Turn the ignition off.
4. Take the Remote Keyless Entry (RKE) transmitter with you.

Leaving the Vehicle with the Engine Running

⚠ Warning

Object-ID=2739009 LMD=02-Nov-2011

It can be dangerous to leave the vehicle with the engine running. It could overheat and catch fire.

It is dangerous to get out of the vehicle if the shift lever is not fully in P (Park) with the parking brake firmly set. The vehicle can roll.

Do not leave the vehicle when the engine is running. If you have left the engine running, the vehicle can move suddenly. You or others could be injured. To be sure the vehicle will not move, even when you are on fairly level ground, always set the parking brake and move the shift lever to P (Park). See *Shifting Into Park* ⇨ *221*. If you are towing a trailer, see *Driving Characteristics and Towing Tips* ⇨ *271*.

If you have to leave the vehicle with the engine running, the vehicle must be in P (Park) and the parking brake set. After shifting into P (Park), try to move the shift lever out without first pushing the button on the shift lever.

If you can, the shift lever was not fully locked into P (Park).

Torque Lock

Torque lock is when the weight of the vehicle puts too much force on the parking pawl in the transmission. This happens when parking on a hill and shifting the transmission into P (Park) is not done properly and then it is difficult to shift out of P (Park). To prevent torque lock, set the parking brake and then shift into P (Park). To find out how, see "Shifting Into Park" listed previously.

If torque lock does occur, the vehicle may need to be pushed uphill by another vehicle to relieve the parking pawl pressure, so you can shift out of P (Park).

Shifting out of Park

Object-ID=4277752 Owner=Byrne, Matthew LMD=18-Sep-2015 LMB=Byrne, Matthew

This vehicle is equipped with an electronic shift lock release system. The shift lock release is designed to prevent movement of the shift lever out of P (Park), unless the ignition is in ON/RUN and the brake pedal is applied.

The shift lock release is always functional except in the case of an uncharged or low voltage (less than 9 volt) battery.

If the vehicle has an uncharged battery or a battery with low voltage, try charging or jump starting the battery. See *Jump Starting - North America* ⇨ *347* for more information.

To shift out of P (Park):

1. Apply the brake pedal.
2. Release the parking brake. See *Electric Parking Brake* ⇨ *228*.
3. Press the shift lever button.
4. Move the shift lever.

If unable to shift out of P (Park):

1. Fully release the shift lever button.
2. While holding down the brake pedal, press the shift lever button again.
3. Move the shift lever.

If the shift lever will not move from P (Park), consult your dealer or a professional towing service.

Parking over Things That Burn

Object-ID=2153523 Owner=Byrne, Matthew LMD=26-Aug-2015 LMB=Byrne, Matthew

⚠ Warning

Object-ID=2207455 LMD=06-Nov-2008

Things that can burn could touch hot exhaust parts under the vehicle and ignite. Do not park over papers, leaves, dry grass, or other things that can burn.

Extended Parking

Object-ID=4328022 Owner=Byrne, Matthew LMD=17-Dec-2015 LMB=Byrne, Matthew

It is better not to park with the vehicle running. If the vehicle is left while running, follow the proper steps to be sure the vehicle will not move and there is adequate ventilation. See *Shifting Into Park* ⇨ *221* and *Engine Exhaust* ⇨ *223*.

If the vehicle is left in P (Park) while running and the Remote Keyless Entry (RKE) transmitter is outside the vehicle, the vehicle will turn off after one hour.

If the vehicle is left in P (Park) while running and the RKE transmitter is inside, the vehicle will run for two hours. At the end of the second hour, the vehicle will turn off.

The timer will reset if the vehicle is taken out of P (Park) while it is running.

Engine Exhaust

Object-ID=2153524 Owner=Byrne, Matthew
LMD=27-Aug-2015 LMB=Byrne, Matthew

⚠ Warning

Object-ID=2210483 LMD=23-Jul-2015

Engine exhaust contains carbon monoxide (CO), which cannot be seen or smelled. Exposure to CO can cause unconsciousness and even death.

Exhaust may enter the vehicle if:

- The vehicle idles in areas with poor ventilation (parking garages, tunnels, deep snow that may block underbody airflow or tail pipes).
- The exhaust smells or sounds strange or different.
- The exhaust system leaks due to corrosion or damage.
- The vehicle exhaust system has been modified, damaged, or improperly repaired.

(Continued)

Warning (Continued)

Object-ID=2210483 LMD=23-Jul-2015

- There are holes or openings in the vehicle body from damage or aftermarket modifications that are not completely sealed.

If unusual fumes are detected or if it is suspected that exhaust is coming into the vehicle:

- Drive it only with the windows completely down.
- Have the vehicle repaired immediately.

Never park the vehicle with the engine running in an enclosed area such as a garage or a building that has no fresh air ventilation.

Running the Vehicle While Parked

Object-ID=4298815 Owner=Byrne, Matthew
LMD=04-Nov-2015 LMB=Byrne, Matthew

It is better not to park with the engine running.

If the vehicle is left with the engine running, follow the proper steps to be sure the vehicle will not move. See *Shifting Into Park* ⇨ *221* and *Engine Exhaust* ⇨ *223*.

Automatic Transmission

Object-ID=4035218 Owner=Byrne, Matthew LMD=08-Oct-2015 LMB=Clark, Lorien

3471401

There are several different positions for the shift lever.

P : This position locks the rear wheels. Use this position when starting the engine because the vehicle cannot move easily.

⚠ Warning

Object-ID=2210294 LMD=14-Nov-2008

It is dangerous to get out of the vehicle if the shift lever is not fully in P (Park) with the parking brake firmly set. The vehicle can roll.

Do not leave the vehicle when the engine is running unless you have to. If you have left the engine running, the vehicle can move suddenly. You or others could be injured. To be sure the vehicle will not move, even when you are on fairly level ground, always set the parking brake and move the shift lever to P (Park). See *Shifting Into Park* ⇨ *221*. If you are pulling a trailer, see *Driving Characteristics and Towing Tips* ⇨ *271*.

Make sure the shift lever is fully in P (Park) before starting the engine. The vehicle has an electronic shift lock release system. Fully apply the regular brakes first and then press the shift lever button before shifting from P (Park) when the ignition is in ON/RUN. If you cannot shift out of P (Park), ease pressure on the shift lever and push the shift lever all the way into P (Park) as you maintain brake application. Then press the shift lever button and move the shift lever into another gear. See *Shifting out of Park* ⇨ *222*.

Caution

Object-ID=2867385 LMD=05-Jun-2012

Shifting to R (Reverse) while the vehicle is moving forward could damage the transmission. The repairs would not be covered by the vehicle warranty. Shift to R (Reverse) only after the vehicle is stopped.

R : Use this gear to back up.

At low vehicle speeds, R (Reverse) can be used to rock the vehicle back and forth to get out of snow, ice, or sand without damaging your transmission. See *If the Vehicle Is Stuck* ⇨ *211*.

N : In this position, the engine does not connect with the wheels. To restart when the vehicle is already

moving, use N (Neutral) only. You can also use N (Neutral) when the vehicle is being towed.

⚠ Warning

Object-ID=2207386 LMD=06-Nov-2008

Shifting into a drive gear while the engine is running at high speed is dangerous. Unless your foot is firmly on the brake pedal, the vehicle could move very rapidly. You could lose control and hit people or objects. Do not shift into a drive gear while the engine is running at high speed.

Caution

Object-ID=2867386 LMD=05-Jun-2012

Shifting out of P (Park) or N (Neutral) with the engine running at high speed may damage the transmission. The repairs would not be covered by the vehicle warranty. Be sure the engine is not running at high speed when shifting the vehicle.

D : This position is for normal driving. It provides the best fuel economy. If you need more power for passing, and you are:

- Going less than 55 km/h (35 mph), push the accelerator pedal about halfway down.
- Going about 55 km/h (35 mph) or more, push the accelerator all the way down.

  The transmission will shift down to a lower gear and have more power.

Downshifting the transmission in slippery road conditions could result in skidding. See “Skidding” under *Loss of Control* ⇨ *203*.

M : This mode can be entered with the shift lever in the D (Drive) position by pressing the M (Manual Mode) button on the top of the shift lever. M (Manual Mode) allows the driver to select gears appropriate for current driving conditions. M (Manual Mode) can be exited with a second press of the M (Manual Mode) button. See *Manual Mode* ⇨ *226*.

Caution

Object-ID=2884407 LMD=25-Jun-2012

Spinning the tires or holding the vehicle in one place on a hill using only the accelerator pedal may damage the transmission. The repair will not be covered by the vehicle warranty. If you are stuck, do not spin the tires. When stopping on a hill, use the brakes to hold the vehicle in place.

While in Sport or Track Mode, the vehicle monitors driving behavior, and automatically enables Performance Shift Features when spirited driving is detected. These features maintain lower transmission gears to increase available engine braking and improve acceleration response. The vehicle will exit these features and return to normal operation after a short period when no spirited driving is detected. See *Driver Mode Control* ⇨ *231*.

Manual Mode

Object-ID=4035237 Owner=Byrne, Matthew LMD=08-Oct-2015 LMB=Clark, Lorien

Tap Shift

Caution

Object-ID=3273158 LMD=25-Jan-2013

Driving with the engine at a high rpm without upshifting while using Tap Shift, could damage the vehicle. Always upshift when necessary while using Tap Shift.

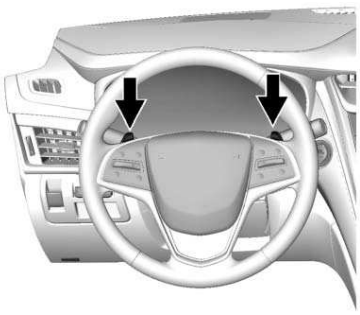

3471435

Vehicles with Tap Shift have controls on the back of the steering wheel to manually shift the automatic transmission.

To enter Permanent Tap Shift Mode:

1. With the shift lever in D (Drive), press the M (Manual Mode) button on the top of the shift lever. While in Tap Shift Mode, the M of the PRNDM section of the instrument cluster will become highlighted, and the current gear is indicated.
2. Tap the left control to downshift, and the right control to upshift. To shift to the lowest available gear, press and hold the left control.
3. To exit, press the M (Manual Mode) button a second time.

With the shift lever in D (Drive) and not in Permanent Tap Shift Mode, the tap shift controls will activate a temporary tap manual shift mode, allowing the transmission to be manually shifted. Automatic shifts return after no manual shifts have been done for seven to 10 seconds.

The Temporary Tap Shift Mode can also be deactivated by holding the right upshift control briefly.

While using Tap Shift, the vehicle will have firmer, quicker shifting. You can use this for sport driving or when climbing or descending hills, to stay in gear longer, or to downshift for more power or engine braking.

The transmission will only allow you to shift into gears appropriate for the vehicle speed and engine revolutions per minute (rpm). The transmission will not automatically shift to the next lower gear if the engine rpm is too high, nor to the next higher gear when the maximum engine rpm is reached.

If shifting is prevented for any reason, a SHIFT DENIED message will be displayed in the instrument cluster. See *Transmission Messages* ⇨ *157*.

When accelerating the vehicle from a stop in snowy and icy conditions, it is suggested to shift into second gear. A higher gear allows the vehicle to gain more traction on slippery surfaces.

Cadillac CTS/CTS-V Owner Manual (GMNA-Localizing-U.S./Canada-2ndPrint-11254870) - 2017 - Final Review - 6/14/16

Drive Systems

All-Wheel Drive

Object-ID=2964568 Owner=Byrne, Matthew
LMD=01-Sep-2015 LMB=Patchak, Roxanne

Vehicles with this feature always send engine power to all four wheels. It is fully automatic, and adjusts itself as needed for road conditions.

Brakes

Antilock Brake System (ABS)

Object-ID=2159676 Owner=Dobson, Bert
LMD=01-Feb-2016 LMB=Dobson, Bert

This vehicle has an Antilock Brake System (ABS), an advanced electronic braking system that helps prevent a braking skid.

When the vehicle begins to drive away, ABS checks itself. A momentary motor or clicking noise may be heard while this test is going on, and it may even be noticed that the brake pedal moves a little. This is normal.

1971505

If there is a problem with ABS, this warning light stays on. See *Antilock Brake System (ABS) Warning Light* ⇨ *134*.

If driving safely on a wet road and it becomes necessary to slam on the brakes and continue braking to avoid a sudden obstacle, a computer senses the wheels are slowing down. If one of the wheels is about to stop rolling, the computer will separately work the brakes at each wheel.

ABS can change the brake pressure to each wheel, as required, faster than any driver could. This can help you steer around the obstacle while braking hard.

As the brakes are applied, the computer keeps receiving updates on wheel speed and controls braking pressure accordingly.

Remember: ABS does not change the time needed to get a foot up to the brake pedal or always decrease stopping distance. If you get too close to the vehicle in front of you, there will not be enough time to apply the brakes if that vehicle suddenly slows or stops. Always leave enough room up ahead to stop, even with ABS.

Using ABS

Do not pump the brakes. Just hold the brake pedal down firmly and let ABS work. You may hear the ABS pump or motor operating and feel the brake pedal pulsate. This is normal.

Braking in Emergencies

ABS allows you to steer and brake at the same time. In many emergencies, steering can help more than even the very best braking.

Electric Parking Brake

Object-ID=2964610 Owner=Byrne, Matthew LMD=01-Sep-2015 LMB=Patchak, Roxanne

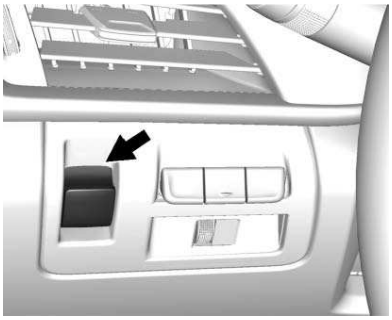

3218209

The vehicle has an Electric Parking Brake (EPB). The switch for the EPB is on the instrument panel, to the left of the steering wheel. The EPB can always be activated, even if the ignition is off. To prevent draining the battery, avoid repeated cycles of the EPB system when the engine is not running.

The system has a red parking brake status light and an amber parking brake warning light. See *Parking Brake Light* ⇨ *133* and *Service Electric Parking Brake Light* ⇨ *134*. There are also parking brake-related Driver Information Center (DIC) messages. See *Brake System Messages* ⇨ *147*. In case of insufficient electrical power, the EPB cannot be applied or released.

Before leaving the vehicle, check the red parking brake status light to ensure that the parking brake is applied.

EPB Apply

To apply the EPB:

1. Be sure the vehicle is at a complete stop.
2. Lift up the EPB switch momentarily.

The red parking brake status light will flash and then stay on once the EPB is fully applied. If the red parking brake status light flashes continuously, then the EPB is only partially applied or there is a problem with the EPB. A DIC message will display. Release the EPB and try to apply it again. If the light does not come on, or keeps flashing, have the vehicle serviced. Do not drive the vehicle if the red parking brake status light is flashing. See your dealer. See *Parking Brake Light* ⇨ *133*.

If the amber parking brake warning light is on, lift up on the EPB switch and hold it up. Continue to hold the switch until the red parking brake status light remains on. If the amber parking brake warning light remains on, see your dealer.

If the EPB is applied while the vehicle is moving, the vehicle will decelerate as long as the switch is held up. If the switch is held up until the vehicle comes to a stop, the EPB will remain applied.

The vehicle may automatically apply the EPB in some situations when the vehicle is not moving. This is normal, and is done to periodically check the correct operation of the EPB system.

If the EPB fails to apply, the rear wheels should be blocked to prevent vehicle movement.

EPB Release

To release the EPB:

1. Place the ignition in the ACC/ACCESSORY or ON/RUN position.
2. Apply and hold the brake pedal.
3. Push down momentarily on the EPB switch.

The EPB is released when the red parking brake status light is off.

If the amber parking brake warning light is on, release the EPB by pushing down on the EPB switch and holding it down. Continue to hold the switch until the red parking brake status light is off. If either light stays on after release is attempted, see your dealer.

Caution

Object-ID=2867389 LMD=05-Jun-2012

Driving with the parking brake on can overheat the brake system and cause premature wear or damage to brake system parts. Make sure that the parking brake is fully released and the brake warning light is off before driving.

Automatic EPB Release

The EPB will automatically release if the vehicle is running, placed into gear, and an attempt is made to drive away. Avoid rapid acceleration when the EPB is applied, to preserve parking brake lining life.

If parking on a hill, or if the vehicle is pulling a trailer, see *Driving Characteristics and Towing Tips* ⇨ *271*.

Brake Assist

Object-ID=2172730 Owner=Dobson, Bert LMD=03-Dec-2014 LMB=Rocha, Wendy

This vehicle has a brake assist feature designed to assist the driver in stopping or decreasing vehicle speed in emergency driving conditions. This feature uses the stability system hydraulic brake control module to supplement the power brake system under conditions where the driver has quickly and forcefully applied the brake pedal in an attempt to quickly stop or slow down the vehicle. The stability system hydraulic brake control module increases brake pressure at each corner of the vehicle until the ABS activates. Minor brake pedal pulsation or pedal movement during this time is normal and the driver should continue to apply the brake pedal as the driving situation dictates. The brake assist feature will automatically disengage when the brake pedal is released or brake pedal pressure is quickly decreased.

Ride Control Systems

Traction Control/Electronic Stability Control

Object-ID=4451533 Owner=Garcia, Sid
LMD=10-Mar-2016 LMB=Garcia, Sid

The vehicle has a Traction Control System (TCS) and StabiliTrak®, an electronic stability control system. These systems help limit wheel slip and assist the driver in maintaining control, especially on slippery road conditions.

TCS activates if it senses that any of the drive wheels are spinning or beginning to lose traction. When this happens, the system brakes the spinning wheel(s) and/or reduces engine power to limit wheel spin.

StabiliTrak activates when the computer senses a difference between the intended path and the direction the vehicle is actually traveling. StabiliTrak selectively applies braking pressure at any one of the vehicle's brakes to help steer the vehicle in the intended direction.

If cruise control is being used and traction control or StabiliTrak begins to limit wheel spin, cruise control will disengage. Cruise control may be turned back on when road conditions allow.

Both systems come on automatically when the vehicle is started and begins to move. The systems may be heard or felt while they are operating or while performing diagnostic checks. This is normal and does not mean there is a problem with the vehicle.

It is recommended to leave both systems on for normal driving conditions, but It may be necessary to turn TCS off if the vehicle gets stuck in sand, mud, ice, or snow. See *If the Vehicle Is Stuck* ⇨ *211* and “Turning the Systems Off and On” later in this section.

1991282

The indicator light for both systems is in the instrument cluster. This light will:

- Flash when TCS is limiting wheel spin.
- Flash when StabiliTrak is activated.
- Turn on and stay on when either system is not working.

If either system fails to turn on or to activate, a message displays in the Driver Information Center (DIC), and comes on and stays on to indicate that the system is inactive and is not assisting the driver in maintaining control. The vehicle is safe to drive, but driving should be adjusted accordingly.

If comes on and stays on:

1. Stop the vehicle.
2. Turn the engine off and wait 15 seconds.
3. Start the engine.

Drive the vehicle. if comes on and stays on, the vehicle may need more time to diagnose the problem. If the condition persists, see your dealer.

Turning the Systems Off and On

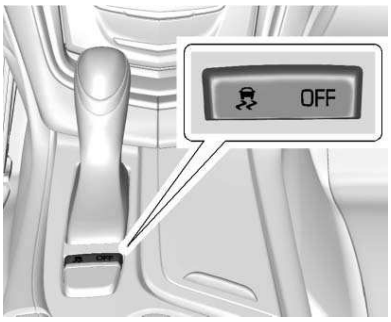

2964586

Caution

Object-ID=2834086 LMD=18-Apr-2012

Do not repeatedly brake or accelerate heavily when TCS is off. The vehicle driveline could be damaged.

To turn off only TCS, press and release . The traction off light displays in the instrument cluster. The appropriate DIC message is displayed. See *Ride Control System Messages* ⇨ *154*.

To turn TCS on again, press and release . The traction off light displayed in the instrument cluster will turn off.

If TCS is limiting wheel spin when is pressed, the system will not turn off until the wheels stop spinning.

To turn off both TCS and StabiliTrak, press and hold until the traction off light and StabiliTrak OFF light come on and stay on in the instrument cluster. The appropriate DIC message is displayed. See *Ride Control System Messages* ⇨ *154*.

To turn TCS and StabiliTrak on again, press and release . The traction off light and StabiliTrak OFF light in the instrument cluster turn off.

Adding accessories can affect the vehicle's performance. See *Accessories and Modifications* ⇨ *279*.

Driver Mode Control

Object-ID=4498884 Owner=Garcia, Sid
LMD=06-May-2016 LMB=Garcia, Sid

Driver Mode Control attempts to add a sportier feel, provide a more comfortable ride, or assist in different weather conditions or terrain. This system simultaneously changes the software settings of various sub-systems. Depending on the option package, available features, and mode selected, the suspension, steering, and powertrain will change settings to achieve the desired mode characteristics. If the vehicle is equipped with Magnetic Ride Control, selecting the various Driver Modes adjusts the ride of the vehicle to enhance the ride performance for the road conditions and the selected mode.

While in the Sport and/or Track Modes, the vehicle monitors driving behavior and automatically enables Performance Shift Features when

spirited driving is detected. These features maintain lower transmission gears to increase available engine braking and improve acceleration response. The vehicle will exit these features and return to normal Sport or Track Mode operation after a short period when no spirited driving is detected.

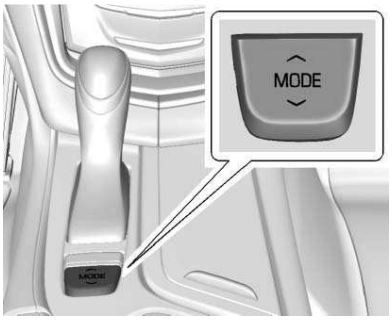

Driver Mode Control Switch

2964588

The Driver Mode Control has three or four modes: Tour, Sport, Snow/Ice, and Track. The Track Mode is for V-Sport and V-Series models only. Press ∧ or ∨ on the MODE switch on the center console to make a mode selection. The first press of the switch will show the current mode. Subsequent presses will scroll though the available modes. The Tour and Sport Modes will feel similar on a smooth road. Select a new setting whenever driving conditions change.

Tour Mode

Use for normal city and highway driving to provide a smooth, soft ride.

Sport Mode

Use where road conditions or personal preference demand a more controlled response.

When selected, the Sport Mode indicator will display in the Driver Information Center (DIC).

Snow/Ice Mode

Use when more traction is needed during slippery conditions.

When selected, the Snow/Ice Mode indicator will display in the DIC.

This feature is not intended for use when the vehicle is stuck in sand, mud, ice, snow, or gravel. If the vehicle becomes stuck, see *If the Vehicle Is Stuck* ➪ *211*.

Track Mode (V-Sport and V-Series Only)

Use when maximum vehicle handling is desired.

When selected, the Track Mode indicator will display in the DIC.

When in Track Mode, the automatic transmission and steering will function similar to Sport Mode. The accelerator pedal is adjusted to give maximum control during the highest level of spirited driving. The Magnetic Ride Control will be set to the optimum level for vehicle responsiveness. Competitive Driving Mode or Performance Traction Management (PTM) can be accessed through this mode.

There are six attributes that vary by mode shown below. Not all vehicles have all features, depending on the vehicle options.

Cadillac CTS/CTS-V Owner Manual (GMNA-Localizing-U.S./Canada-2ndPrint-11254870) - 2017 - Final Review - 6/14/16

Modes:	**TOUR** *Default*	**SPORT**	**SNOW/ICE**	**TRACK**
Throttle Progression	Tour	Tour	Snow/Ice	Track
Transmission Shift Mode	Tour	Sport	Tour	Track
Steering (Assist Effort)	Tour	Sport	Tour	Track
Magnetic Ride Control (if equipped)	Tour	Sport	Tour	Track
Launch Control (V-Series Only)	NA	NA	NA	Available
Stability Control	Tour	Tour	Tour	Track
Performance Traction Management (if equipped) (V-Series Only)	NA	NA	NA	Available
Engine Sound Management	Tour	Sport	Tour	Track

Driver Mode Selector Attributes Affected

The Gauge Cluster Display is configured for each mode when linked (default):

Throttle Progression

Adjusts throttle sensitivity by selecting how quick or slow the throttle reacts to input.

- Snow/Ice - The accelerator pedal will reduce engine torque at small pedal inputs. This allows better wheel control on slippery surfaces.
- Track - The accelerator pedal is adjusted to give maximum control during the highest level of spirited driving.

Transmission Shift Mode

Sport or Track – Performance Mode Lift Foot (PMLF) allows the transmission to hold the current gear after a quick release of a heavily applied accelerator pedal. This provides greater engine braking and enhanced vehicle control without using the paddles. Performance Algorithm Shift (PAS) recognizes aggressive cornering, heavy braking, and high acceleration to select and hold lower gears when not using paddles. The shifts are also firmer to increase the quickness of shifting.

Steering (Assist Effort)

Adjusts from a lighter steering feel in Tour mode to reduced assist in Sport and Track mode for more steering feel.

Magnetic Ride Control (if equipped)

Adjusts the shock dampening firmness from a comfort tune in Tour mode to an optimized responsiveness tune in Sport and Track.

Launch Control (V-Series Only)

Available only in Track mode for maximum “off–the–line” acceleration when in Competitive or PTM modes.

Stability Control

- Competitive mode allows less computer control to permit some slide and drift and is selected with the button – only available in Track mode.
- StabiliTrak can be turned off by pressing and holding the button for five seconds.

PTM (Performance Traction Management) (if equipped) (V-Series Only)

- Available in Track mode.
- There are five selectable settings.

Driver Mode Customization

The Engine Sound Management, steering, and suspension drive modes can be set to the driver’s preference. See “Driving Mode” under “Personalization Menus” in *Vehicle Personalization* ⇨ *158*.

When in the Track main vehicle mode, you cannot overwrite the Steering or Suspension settings. These settings are designed to interact with the advanced functions in the Track Mode and cannot be overwritten.

The selections made in the Driving Mode menu overwrite the main vehicle mode selection via the buttons or switch on the center console. In

order to customize and overwrite, the driver select one of the three settings by touching the infotainment display.

When in the customization screen for each system, select one of the available options:

- Auto (Follows the mode switch)
- Tour
- Sport
- Track

The default will be to follow the vehicle mode switch settings, but the main vehicle mode selection for the currently selected system can be overwritten using this menu. The settings selected in this menu will set the vehicle behavior in all selected vehicle modes, and will be retained over each ignition cycle. They do not have to be reset each time the vehicle is started.

Competitive Driving Mode

Object-ID=4451585 Owner=Garcia, Sid
LMD=10-Mar-2016 LMB=Garcia, Sid

To select this optional handling mode, press quickly two times and the DIC will display the appropriate message. While in the Competitive Driving Mode, the traction off light and StabiliTrak OFF light will come on in the instrument cluster. TCS does not limit wheel spin, the Electronic Limited-Slip Differential (eLSD) allows increased vehicle agility, and more effort is required to turn the steering wheel. See “Limited-Slip Differential (V-Series Only)” later in this section. Adjust your driving accordingly.

Press again, or turn the ignition to ACC/ACCESSORY and restart the vehicle, to turn TCS back on. The traction off light and StabiliTrak OFF light will go out in the instrument cluster.

Caution

Object-ID=3347752 LMD=15-Mar-2013

When traction control is turned off, or Competitive Driving Mode is active, it is possible to lose traction.

Performance Traction Management (V-Series Only)

Performance Traction Management (PTM) integrates the Traction Control, StabiliTrak, and Selective Ride Control systems to provide improved and consistent performance when cornering. The amount of available engine power is based on the mode selected, track conditions, driver skill, and the radius of each corner.

2040862

This light is on when the vehicle is in the PTM mode.

To select this optional handling mode, the vehicle mode must be Track. Then quickly press on the center console two times. PERFORMANCE TRACTION 1 - WET ACTIVE HANDLING ON displays in the DIC.

When PTM is active, the up and down buttons will no longer change Drive Modes, but instead change PTM modes.

To select a mode while in PTM, press the Driver Mode Control/PTM buttons on the center console.

To experience the performance benefit of this system, after entering a curve and at the point where normal acceleration occurs, fully push the accelerator pedal. The PTM system will modify the level of engine power for a smooth and consistent corner exit.

The PTM system contains five modes. These modes are selected by pressing the Driver Mode Control/PTM buttons on the center console. Scroll up or down through modes 1–5 by pressing the MODE SELECT up and down buttons The following is a DIC display description and the recommended usage of each mode:

PERFORMANCE TRACTION 1 – WET ACTIVE HANDLING ON

- Intended for all driver skill levels.
- Wet or damp conditions only — not intended for use in heavy rain or standing water.
- StabiliTrak is on and engine power is reduced based on conditions.

PERFORMANCE TRACTION 2 – DRY ACTIVE HANDLING ON

- For use by less experienced drivers or while learning a new track.
- Dry conditions only.
- StabiliTrak is on and engine power is slightly reduced.

PERFORMANCE TRACTION 3 – SPORT ACTIVE HANDLING ON

- For use by drivers who are familiar with the track.
- Dry conditions only.
- Requires more driving skill than mode 2.
- StabiliTrak is on and more engine power is available than in mode 2.

PERFORMANCE TRACTION 4 – SPORT ACTIVE HANDLING OFF

- For use by drivers who are familiar with the track.
- Dry conditions only.
- Requires more driving skill than modes 2 or 3.
- StabiliTrak is off and available engine power is the same as mode 3.

PERFORMANCE TRACTION 5 – RACE ACTIVE HANDLING OFF

- For use by experienced drivers who are familiar with the track.
- Dry conditions only.
- Requires more driving skill than in other modes.
- StabiliTrak is off and engine power is available for maximum cornering speed.

Press and release to turn off PTM and return to the traction control and StabiliTrak systems. The traction off light and StabiliTrak OFF light will go out.

Launch Control (V-Series Only)

A Launch Control feature is available, within Performance Traction Management, to allow the driver to achieve high levels of vehicle acceleration in a straight line. Launch Control is a form of traction control that manages tire spin while launching the vehicle. This feature is intended for use during closed course race events where consistent zero to 60 and quarter mile times are desirable.

Launch Control is only available when the following criteria are met:

- Performance Traction Management modes are selected. The TCS light comes on the instrument panel and the appropriate DIC message displays.
- The vehicle is not moving.
- The steering wheel is pointing straight.
- The brake pedal must be firmly pressed to the floor, equivalent to a panic brake event.
- The accelerator pedal is rapidly applied to wide open throttle. (If the vehicle rolls due to wide open throttle, release the throttle, press the brake pedal more firmly, and re-apply the accelerator to wide open throttle.)

The Launch Control feature will initially limit engine speed as the driver rapidly applies the accelerator pedal to wide open throttle. Allow the engine rpm to stabilize. A smooth, quick release of the brake pedal, while maintaining the fully pressed accelerator pedal, will manage wheel slip.

After the vehicle is launched, the system continues in Performance Traction Management.

Competitive Driving Mode, PTM, and Launch Control are systems designed for a closed course race track and not intended for use on public roads. The systems are not intended to compensate for lack of driver experience or familiarity with the race track.

Limited-Slip Differential (Except V-Sport and V-Series)

Object-ID=3765598 Owner=Garcia, Sid
LMD=17-Feb-2016 LMB=Garcia, Sid

If equipped, the mechanical limited-slip differential can give more traction on snow, mud, ice, sand, or gravel. It works like a standard axle most of the time, but when traction is low, this feature allows the drive wheel with the most traction to move the vehicle. For vehicles with limited-slip differential, driven under severe conditions, the rear axle fluid should be changed. See *Competitive Driving Mode* ⇨ *235* and *Maintenance Schedule* ⇨ *364*.

Limited-Slip Differential (V-Sport and V-Series Only)

Object-ID=4451709 Owner=Garcia, Sid
LMD=10-Mar-2016 LMB=Garcia, Sid

If equipped, the Electronic Limited-Slip Differential (eLSD) is automatically activated. eLSD actively monitors vehicle sensors and driver inputs to determine the amount of change for the conditions. With eLSD, the vehicle has:

- Enhanced high-speed control.
- Improved traction through corners, allowing more acceleration.
- More precise steering.
- Increased vehicle agility.
- Integration with StabiliTrak.

For vehicles with eLSD, driven under severe conditions, the rear axle fluid should be changed. See *Competitive Driving Mode* ⇨ *235* and *Maintenance Schedule* ⇨ *364*.

Cruise Control

Object-ID=4490459 Owner=Parker, Cynthia
LMD=08-Apr-2016 LMB=Parker, Cynthia

⚠ Warning

Object-ID=2207528 LMD=23-Apr-2014

Cruise control can be dangerous where you cannot drive safely at a steady speed. Do not use cruise control on winding roads or in heavy traffic.

Cruise control can be dangerous on slippery roads. On such roads, fast changes in tire traction can cause excessive wheel slip, and you could lose control. Do not use cruise control on slippery roads.

With cruise control, a speed of about 40 km/h (25 mph) or more can be maintained without keeping your foot on the accelerator. Cruise control does not work at speeds below about 40 km/h (25 mph).

If the StabiliTrak® system begins to limit wheel spin while using cruise control, the cruise control automatically disengages. See *Traction Control/Electronic Stability Control* ⇨ *230*. If a collision alert occurs when cruise control is activated, cruise control is disengaged. See *Forward Collision Alert (FCA) System* ⇨ *257*. When road conditions allow the cruise control to be safely used, cruise control can be turned back on.

If the brakes are applied, the cruise control disengages.

3287351

: Press to turn the system on and off. A white indicator appears in the instrument cluster when cruise is turned on.

Cadillac CTS/CTS-V Owner Manual (GMNA-Localizing-U.S./Canada-2ndPrint-11254870) - 2017 - Final Review - 6/14/16

+RES : If there is a set speed in memory, press the control up briefly to resume to that speed or press and hold to accelerate. If the cruise control is already active, use to increase vehicle speed. To increase speed by 1 km/h (1 mph), press +RES up to the first detent. To increase speed to the next 5 km/h (5 mph) mark on the speedometer, press +RES up to the second detent.

SET– : Press the control down briefly to SET– to set the speed and activate cruise control. If cruise control is already active, use to decrease vehicle speed. To decrease speed by 1 km/h (1 mph), press SET– down to the first detent. To decrease speed to the next 5 km/h (5 mph) mark on the speedometer, press SET– down to the second detent.

: Press to disengage cruise control without erasing the set speed from memory.

Setting Cruise Control

If the button is on when not in use, SET– or +RES could get pressed and go into cruise when not desired. Keep the button off when cruise is not being used.

1. Press .
2. Get up to the desired speed.
3. Press and release SET–.
4. Remove your foot from the accelerator.

When the cruise control has been set to the desired speed, a green cruise control indicator appears on the instrument cluster and a cruise set speed message appears on the Head-Up Display (HUD), if equipped.

Resuming a Set Speed

If the cruise control is set at a desired speed and then the brakes are applied or is pressed , the cruise control is disengaged without erasing the set speed from memory.

Once the vehicle speed reaches about 40 km/h (25 mph) or more, press the +RES up to the first detent briefly. The vehicle returns to the previous set speed.

Increasing Speed While Cruise Control is at a Set Speed

If the cruise control system is already activated:

- Press and hold +RES up until the desired speed is reached, then release it.
- To increase vehicle speed in small increments, briefly press +RES up to the first detent. For each press, the vehicle goes about 1 km/h (1 mph) faster.
- To increase vehicle speed in larger increments, briefly press +RES up to the second detent. For each press, the vehicle speed increases to the next 5 km/h (5 mph) mark on the speedometer.

The speedometer reading can be displayed in either English or metric units. See *Instrument Cluster* ⇨ *120*. The increment value used depends on the units displayed.

Reducing Speed While Cruise Control is at a Set Speed

If the cruise control system is already activated:

- Press and hold SET– down until the desired lower speed is reached, then release it.
- To decrease the vehicle speed in small increments, briefly press SET– down to the first detent. For each press, the vehicle goes about 1 km/h (1 mph) slower.
- To decrease the vehicle speed in larger increments, briefly press SET– down to the second detent. For each press, the vehicle speed decreases to the next 5 km/h (5 mph) mark on the speedometer.

The cruise control system may automatically brake to slow the vehicle down (CTS model only).

The speedometer reading can be displayed in either English or metric units. See *Instrument Cluster* ⇨ *120*. The increment value used depends on the units displayed.

Passing Another Vehicle While Using Cruise Control

Use the accelerator pedal to increase the vehicle speed. When you take your foot off the pedal, the vehicle will slow down to the previously set cruise speed. While pressing the accelerator pedal or shortly following the release to override cruise control, briefly applying the SET– switch will result in cruise control set to the current vehicle speed.

Using Cruise Control on Hills

How well the cruise control will work on hills depends upon the vehicle speed, load, and the steepness of the hills. When going up steep hills, you might have to step on the accelerator pedal to maintain the vehicle speed. When going downhill, the cruise control system may automatically brake to slow the vehicle down (CTS model only). Also, you may have to brake or shift to a lower gear to keep the vehicle speed down. If the brake pedal is applied, cruise control disengages.

Ending Cruise Control

There are four ways to end cruise control:

- Step lightly on the brake pedal.
- Press .
- Shift the transmission to N (Neutral).
- Press .

Erasing Speed Memory

The cruise control set speed is erased from memory if is pressed or if the ignition is turned off.

Adaptive Cruise Control

Object-ID=4535122 Owner=Parker, Cynthia LMD=08-Jun-2016 LMB=Parker, Cynthia

If equipped with Adaptive Cruise Control (ACC), it allows the driver to select the cruise control set speed and following gap. Read this entire section before using this system. The following gap is the following time between your vehicle and a vehicle detected directly ahead in your path moving in the same direction. If no vehicle is detected in your path, ACC

works like regular cruise control. ACC uses camera and radar sensors. See *Radio Frequency Statement (US/CAN)* ⇨ *397* or *Radio Frequency Statement (MEXICO1)* ⇨ *397* or *Radio Frequency Statement (MEXICO)* ⇨ *397*.

If a vehicle is detected in your path, ACC can apply acceleration or limited, moderate braking to maintain the selected following gap. To disengage ACC, apply the brake. If ACC is controlling your vehicle speed when the Traction Control System (TCS) or electronic stability control system activates, the ACC may automatically disengage. See *Traction Control/ Electronic Stability Control* ⇨ *230*. When road conditions allow ACC to be safely used, the ACC can be turned back on.

ACC will not engage if the TCS or electronic stability control system is disabled.

⚠ Warning

Object-ID=2749784 LMD=11-May-2012

ACC has limited braking ability and may not have time to slow the vehicle down enough to avoid a collision with another vehicle you are following. This can occur when vehicles suddenly slow or stop ahead, or enter your lane. Also see "Alerting the Driver" in this section. Complete attention is always required while driving and you should be ready to take action and apply the brakes. See *Defensive Driving* ⇨ *201*.

⚠ Warning

Object-ID=2749789 LMD=12-Jan-2015

ACC will not detect or brake for children, pedestrians, animals, or other objects.

Do not use ACC when:

(Continued)

Warning (Continued)

Object-ID=2749789 LMD=12-Jan-2015

- On winding and hilly roads or when the sensors are blocked by snow, ice, or dirt. The system may not detect a vehicle ahead. Keep the entire front of the vehicle clean.
- Visibility is low, such as in fog, rain, or snow conditions. ACC performance is limited under these conditions.
- On slippery roads where fast changes in tire traction can cause excessive wheel slip.

3287351

: Press to turn the system on or off. A white cruise control indicator comes on.

+RES : Press the control up briefly to resume the previous set speed or to increase vehicle speed if ACC is already activated. To increase speed by 1 km/h (1 mph), press +RES up to the first detent. To increase speed to the next 5 km/h (5 mph) mark on the speedometer, press +RES up to the second detent.

SET– : Press the control down briefly to set the speed and activate ACC or to decrease vehicle speed if ACC is already activated. To decrease speed by 1 km/h (1 mph), press SET– down to the first detent. To decrease speed to the next 5 km/h (5 mph) mark on the speedometer, press SET– down to the second detent.

: Press to disengage ACC without erasing the set speed from memory.

: Press to select a following gap time (or distance) setting for ACC of Far, Medium, or Near.

Switching Between ACC and Regular Cruise Control

To switch between ACC and regular cruise control, press and hold . A Driver Information Display (DIC) message displays. See *Vehicle Messages* ⇨ *147*.

When ACC is engaged, a green indicator will be lit on the instrument cluster and the following gap will be displayed. When the regular cruise control is engaged, a green indicator will be lit on the instrument cluster; the following gap will not display.

ACC Indicator

2749012

Regular Cruise Control Indicator

1971514

When the vehicle is turned on, the cruise control mode will be set to the last mode used before the vehicle was turned off.

⚠ Warning

Object-ID=4426284 LMD=10-Mar-2016

Always check the cruise control indicator on the instrument cluster to determine which mode cruise control is in before using the feature. If ACC is not active, the vehicle will not automatically brake for other vehicles, which could cause an accident if the brakes are not applied manually. You and others could be seriously injured or killed.

Setting Adaptive Cruise Control

If is on when not in use, it could get pressed and go into ACC when not desired. Keep off when cruise is not being used.

Select the set speed desired for ACC. This is the vehicle speed when no vehicle is detected in its path.

ACC will not set at a speed less than 25 km/h (16 mph), although it can be resumed when driving at lower speeds.

To set ACC:

1. Press .
2. Get up to the desired speed.
3. Press and release SET– .
4. Remove your foot from the accelerator.

After ACC is set, it may immediately apply the brakes if a vehicle ahead is detected closer than the selected following gap.

2749012

The ACC indicator displays in the instrument cluster and Head-Up Display (HUD) (if equipped). When the ACC is active, the indicator turns green.

Be mindful of speed limits, surrounding traffic speeds, and weather conditions when selecting the set speed.

Resuming a Set Speed

If the ACC is set at a desired speed and then the brakes are applied, the ACC is disengaged without erasing the set speed from memory.

To begin using ACC again, press +RES up briefly. The vehicle returns to the previous set speed.

Increasing Speed While ACC is at a Set Speed

If ACC is already activated, do one of the following:

- Use the accelerator to get to the higher speed. Press SET– down. Release the control and the accelerator pedal. The vehicle will now cruise at the higher speed.

  When the accelerator pedal is pressed, ACC will not brake because it is overridden.
  A warning message will appear on the Driver Information Center (DIC) and the Head-Up Display (HUD) (if equipped). See *Cruise Control Messages* ⇨ *148*.
- Press and hold +RES up until the desired set speed appears on the display, then release it.
- To increase vehicle speed in small increments, press +RES up to the first detent. For each press, the vehicle goes 1 km/h (1 mph) faster.
- To increase vehicle speed in larger increments, press +RES up to the second detent. For each press, the

vehicle speed increases to the next 5 km/h (5 mph) mark on the speedometer.

When it is determined that there is no vehicle ahead or the vehicle ahead is beyond the selected following gap, then the vehicle speed will increase to the set speed.

The speedometer reading can be displayed in either English or metric units. See *Instrument Cluster* ⇨ *120*. The increment value used depends on the units displayed.

Reducing Speed While ACC is at a Set Speed

If ACC is already activated, do one of the following:

- Use the brake to get to the desired lower speed. Press SET– down and release the accelerator pedal. The vehicle will now cruise at the lower speed.
- Press and hold SET– down until the desired lower speed is reached, then release it.
- To decrease the vehicle speed in smaller increments, press SET– down to the first detent. For each press, the vehicle goes about 1 km/h (1 mph) slower.
- To decrease the vehicle speed in larger increments, press SET– down to the second detent. For each press, the vehicle speed decreases to the next 5 km/h (5 mph) mark on the speedometer.

The speedometer reading can be displayed in either English or metric units. See *Instrument Cluster* ⇨ *120*. The increment value used depends on the units displayed.

Selecting the Follow Distance

When a slower moving vehicle is detected ahead within the selected following gap, ACC will adjust the vehicle's speed and attempt to maintain the follow distance gap selected.

Press on the steering wheel to adjust the following gap. Each press cycles the gap button through three settings: Far, Medium, or Near.

When pressed, the current gap setting displays briefly on the instrument cluster and HUD, if equipped. Subsequent presses cycle the gap button through three settings: Far, Medium, or Near. The gap setting will be maintained until it is changed.

Since each gap setting corresponds to a following time (Far, Medium, or Near), the following distance will vary based on vehicle speed. The faster the vehicle speed, the further back your vehicle will follow a vehicle detected ahead. Consider traffic and weather conditions when selecting the following gap. The range of selectable gaps may not be appropriate for all drivers and driving conditions.

Changing the gap setting automatically changes the alert timing sensitivity (Far, Medium, or Near) for the Forward Collision Alert (FCA) feature. See *Forward Collision Alert (FCA) System* ⇨ *257*.

Alerting the Driver

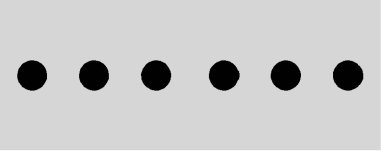

Without Head-Up Display

2735596

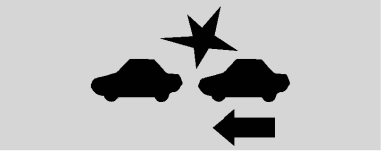

With Head-Up Display

2735462

If ACC is engaged, driver action may be required when ACC cannot apply sufficient braking because of approaching a vehicle too rapidly.

When this condition occurs, a series of red lights or the collision alert symbol on the HUD, if equipped, will flash on the windshield. Either eight beeps will sound from the front, or both sides of the Safety Alert Seat will pulse five times. See "Collision/Detection Systems" under *Vehicle Personalization* ⇨ *158*.

See *Defensive Driving* ⇨ *201*.

Approaching and Following a Vehicle

2625124

The vehicle ahead indicator is in the instrument cluster and HUD display, if equipped.

The vehicle ahead indicator only displays when a vehicle is detected in your vehicle's path moving in the same direction.

If this indicator is not displaying, ACC will not respond to or brake to vehicles ahead.

ACC automatically slows the vehicle down and adjusts vehicle speed to follow the vehicle in front at the selected follow gap. The vehicle speed increases or decreases to follow the vehicle in front of you, but will not exceed the set speed. It may apply limited braking, if necessary. When braking is active, the brake lamps will come on. The automatic braking may feel or sound different than if the brakes were applied manually. This is normal.

Stationary or Very Slow-Moving Objects

⚠ Warning

Object-ID=2749801 LMD=23-Feb-2016

ACC may not detect and react to stopped or slow-moving vehicles ahead of you. For example, the system may not brake for a vehicle it has never detected moving. This can occur in stop-and-go traffic or when a vehicle suddenly appears due to a vehicle ahead changing lanes. Your vehicle may not stop and could cause a crash. Use caution when using ACC. Your complete attention is always

(Continued)

Warning (Continued)

Object-ID=2749801 LMD=23-Feb-2016

required while driving and you should be ready to take action and apply the brakes.

ACC Automatically Disengages

ACC may automatically disengage and the driver will need to manually apply the brakes to slow the vehicle when:

- The sensors are blocked.
- The Traction Control System (TCS) or electronic stability control system has activated or been disabled.
- No traffic or other objects are being detected.
- There is a fault in the system.

The ACC active symbol will not be displayed when ACC is no longer active.

Notification to Resume ACC

ACC will maintain a follow gap behind a detected vehicle and slow your vehicle to a stop behind that vehicle. If the stopped vehicle ahead has driven away and ACC has not resumed, the vehicle ahead indicator will flash as a reminder to check traffic before proceeding. In addition, the left and right sides of the Safety Alert Seat will pulse three times, or three beeps will sound. See "Alert Type" and "Go Notifier" in "Collision/Detection Systems" under *Vehicle Personalization* ⇨ *158*.

When the vehicle ahead drives away, press +RES or the accelerator pedal to resume ACC. If stopped for more than two minutes or if the driver door is opened and the driver safety belt is unbuckled, the ACC automatically applies the electric parking brake to hold the vehicle. The electric parking brake status light will turn on. See *Electric Parking Brake* ⇨ *228*. To release the electric parking brake, press the accelerator pedal.

A DIC warning message may display indicating to shift to P (Park) before exiting the vehicle. See *Vehicle Messages* ⇨ *147*.

⚠ Warning

Object-ID=2749910 LMD=02-Apr-2012

If ACC has stopped the vehicle, and if ACC is disengaged, turned off, or canceled, the vehicle will no longer be held at a stop. The vehicle can move. When ACC is holding the vehicle at a stop, always be prepared to manually apply the brakes.

⚠ Warning

Object-ID=2749911 LMD=14-Feb-2012

Leaving the vehicle without placing it in P (Park) can be dangerous. Do not leave the vehicle while it is being held at a stop by ACC. Always place the vehicle in P (Park) and turn off the ignition before leaving the vehicle.

ACC Override

If using the accelerator pedal while ACC is active, a warning message on the DIC and in the HUD (if equipped)

will indicate that automatic braking will not occur. See *Vehicle Messages* ⇨ *147*. ACC will resume operation when the accelerator pedal is not being pressed.

⚠ Warning

Object-ID=2749912 LMD=26-Jan-2012

The ACC will not automatically apply the brakes if your foot is resting on the accelerator pedal. You could crash into a vehicle ahead of you.

Curves in the Road

⚠ Warning

Object-ID=2749913 LMD=03-Jan-2012

On curves, ACC may not detect a vehicle ahead in your lane. You could be startled if the vehicle accelerates up to the set speed, especially when following a vehicle exiting or entering exit ramps. You could lose control of the vehicle or crash. Do not use ACC while driving

(Continued)

Warning (Continued)

Object-ID=2749913 LMD=03-Jan-2012

on an entrance or exit ramp. Always be ready to use the brakes if necessary.

⚠ Warning

Object-ID=2749915 LMD=14-Feb-2012

On curves, ACC may respond to a vehicle in another lane, or may not have time to react to a vehicle in your lane. You could crash into a vehicle ahead of you, or lose control of your vehicle. Give extra attention in curves and be ready to use the brakes if necessary. Select an appropriate speed while driving in curves.

ACC may operate differently in a sharp curve. It may reduce the vehicle speed if the curve is too sharp.

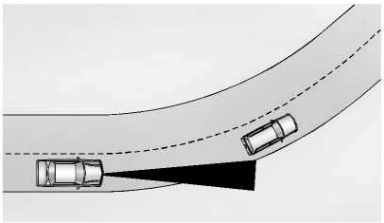

2713760

When following a vehicle and entering a curve, ACC may not detect the vehicle ahead and accelerate to the set speed. When this happens the vehicle ahead indicator will not appear.

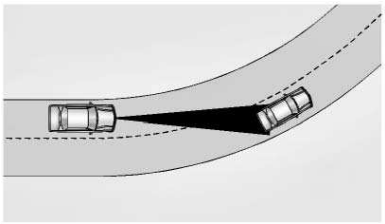

2713761

ACC may detect a vehicle that is not in your lane and apply the brakes.

ACC may occasionally provide an alert and/or braking that is considered unnecessary. It could respond to vehicles in different lanes, signs, guardrails, and other stationary objects when entering or exiting a curve. This is normal operation. The vehicle does not need service.

Other Vehicle Lane Changes

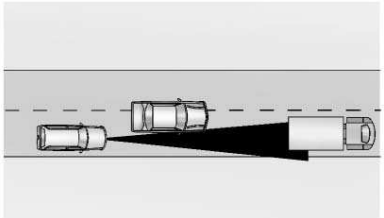

2713764

ACC will not detect a vehicle ahead until it is completely in the lane. The brake may need to be manually applied.

Do Not Use ACC on Hills and When Towing a Trailer

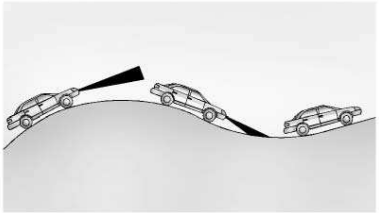

2713766

Do not use ACC when driving on steep hills or when towing a trailer. ACC will not detect a vehicle in the lane while driving on steep hills. The driver will often need to take over acceleration and braking on steep hills, especially when towing a trailer. If the brakes are applied, the ACC disengages.

Ending ACC

There are three ways to disengage ACC:

- Step lightly on the brake pedal.
- Press .
- Press .

Erasing Speed Memory

The cruise control set speed is erased from memory if is pressed or if the ignition is turned off.

Cleaning the Sensing System

The camera sensor on the windshield behind the rearview mirror and the radar sensors on the front of the vehicle can become blocked by snow, ice, dirt, or mud. These areas need to be cleaned for ACC to operate properly.

For cleaning instructions, see “Washing the Vehicle” under *Exterior Care* ⇨ *353*.

System operation may also be limited under snow, heavy rain, or road spray conditions.

Cadillac CTS/CTS-V Owner Manual (GMNA-Localizing-U.S./Canada-2ndPrint-11254870) - 2017 - Final Review - 6/14/16

Driver Assistance Systems

Object-ID=2711374 Owner=Owens, Lynnette LMD=07-Oct-2015 LMB=Clark, Lorien

This vehicle may have features that work together to help avoid crashes or reduce crash damage while driving, backing, and parking. Read this entire section before using these systems.

⚠ Warning

Object-ID=2747034 LMD=24-Feb-2016

Do not rely on the Driver Assistance Systems. These systems do not replace the need for paying attention and driving safely. You may not hear or feel alerts or warnings provided by these systems. Failure to use proper care when driving may result in injury, death, or vehicle damage. See *Defensive Driving* ➪ *201*.

Under many conditions, these systems will not:

(Continued)

Warning (Continued)

Object-ID=2747034 LMD=24-Feb-2016

- Detect children, pedestrians, bicyclists, or animals.
- Detect vehicles or objects outside the area monitored by the system.
- Work at all driving speeds.
- Warn you or provide you with enough time to avoid a crash.
- Work under poor visibility or bad weather conditions.
- Work if the detection sensor is not cleaned or is covered by ice, snow, mud, or dirt.
- Work if the detection sensor is covered up, such as with a sticker, magnet, or metal plate.
- Work if the area surrounding the detection sensor is damaged or not properly repaired.

(Continued)

Warning (Continued)

Object-ID=2747034 LMD=24-Feb-2016

Complete attention is always required while driving, and you should be ready to take action and apply the brakes and/or steer the vehicle to avoid crashes.

Audible or Safety Alert Seat

Some driver assistance features alert the driver of obstacles by beeping. To change the volume of the warning chime, see “Comfort and Convenience” under *Vehicle Personalization* ➪ *158*.

If equipped with the Safety Alert Seat, the driver seat cushion may provide a vibrating pulse alert instead of beeping. To change this, see “Collision/Detection Systems” under *Vehicle Personalization* ➪ *158*.

Assistance Systems for Parking or Backing

Object-ID=4491570 Owner=Owens, Lynnette
LMD=23-May-2016 LMB=Owens, Lynnette

If equipped, the Rear Vision Camera (RVC), Rear Parking Assist (RPA), Front Parking Assist (FPA), Surround Vision, Front Vision Camera, Curb View Camera, Reverse Automatic Braking (RAB) and Backing Warning System, Rear Cross Traffic Alert (RCTA), and Automatic Parking Assist (APA) may help the driver park or avoid objects. Always check around the vehicle when parking or backing.

Rear Vision Camera (RVC)

When the vehicle is shifted into R (Reverse), the RVC displays an image of the area behind the vehicle in the infotainment display. The previous screen displays when the vehicle is shifted out of R (Reverse) after a short delay. To return to the previous screen sooner, press any button on the infotainment system, shift into P (Park), or reach a vehicle speed of 8 km/h (5 mph). Select Front or Rear Camera on the camera screen to view the front or rear camera views. Select Guidance Lines on the camera screen to enable or disable the guidance lines.

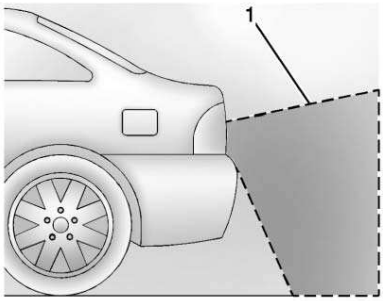

2719896

1. View Displayed by the Camera

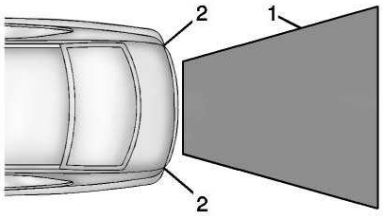

2719900

1. View Displayed by the Camera
2. Corners of the Rear Bumper

Displayed images may be farther or closer than they appear. The area displayed is limited and objects that are close to either corner of the bumper or under the bumper do not display.

A warning triangle may display to show that Rear Parking Assist (RPA) has detected an object. This triangle changes from amber to red and increases in size the closer the object.

Surround Vision (CTS Only)

If equipped, Surround Vision displays an image of the area surrounding the vehicle, along with the front or rear

camera views in the infotainment display. The front camera is in the grille or near the front emblem, the side cameras are on the bottom of the outside rearview mirrors, and the rear camera is above the license plate.

⚠ Warning

Object-ID=3714598 LMD=27-Jul-2015

The Surround Vision cameras have blind spots and will not display all objects near the corners of the vehicle. Folding side mirrors that are out of position will not display surround view correctly. Always check around the vehicle when parking or backing.

4032935

1. Views Displayed by the Surround Vision Cameras
2. Area Not Shown

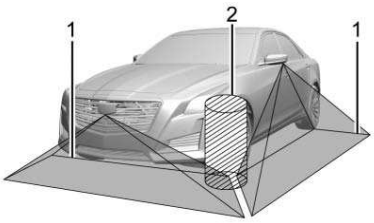

4032947

1. Views Displayed by the Surround Vision Cameras
2. Area Not Shown

Front Vision Camera (CTS Only)

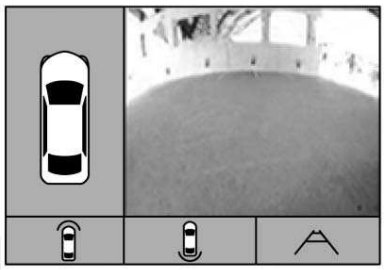

4450059

If equipped, a view of the area in front of the vehicle displays in the infotainment display. The view displays after shifting from R (Reverse) to a forward gear, or by pressing CAMERA in the center stack, and when the vehicle is moving forward slower than 8 km/h (5 mph).
If equipped, the front view camera also displays when the Parking Assist system detects an object within 30 cm (12 in).

Curb View Camera (CTS-V Series Only)

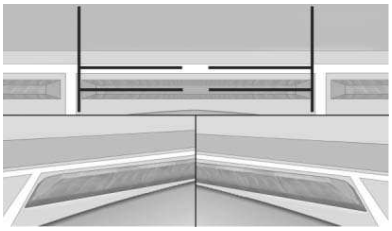

4034798

If equipped, a view of the area in front of the vehicle displays in the center stack. The display shows a top down view on the top of the screen and left and right front camera images on the bottom. The front views display after shifting from R (Reverse) to a forward gear, or by pressing CAMERA in the center stack, and when the vehicle is moving forward slower than 8 km/h (5 mph). If equipped, the front camera images also display when the Parking Assist system detects an object within 60 cm (24 in). The front cameras are on both sides of the front fascia.

⚠ Warning

Object-ID=2209010 LMD=12-Nov-2014

The camera(s) do not display children, pedestrians, bicyclists, crossing traffic, animals, or any other object outside of the cameras' field of view, below the bumper, or under the vehicle. Shown distances may be different from actual distances. Do not drive or park the vehicle using only these camera(s). Always check behind and around the vehicle before driving. Failure to use proper care may result in injury, death, or vehicle damage.

Parking Assist

With RPA, and if equipped with FPA, as the vehicle moves at speeds of less than 8 km/h (5 mph) the sensors on the bumpers may detect objects up to 2.5 m (8 ft) behind and 1.2 m (4 ft) in front of the vehicle within a zone 25 cm (10 in) high off the ground and below bumper level. These detection distances may be shorter during warmer or humid weather. Blocked sensors will not detect objects and can also cause false detections. Keep the sensors clean of mud, dirt, snow, ice, and slush; and clean sensors after a car wash in freezing temperatures.

⚠ Warning

Object-ID=2209546 LMD=19-Apr-2016

The Parking Assist system does not detect children, pedestrians, bicyclists, animals, or objects located below the bumper or that are too close or too far from the vehicle. It is not available at speeds greater than 8 km/h (5 mph). To prevent injury, death, or vehicle damage, even with Parking Assist, always check the area around the vehicle and check all mirrors before moving forward or backing.

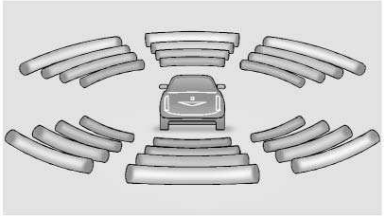

2739659

The instrument cluster may have a parking assist display with bars that show “distance to object” and object location information for the Parking Assist system. As the object gets closer, more bars light up and the bars change color from yellow to amber to red.

When an object is first detected in the rear, one beep will be heard from the rear, or both sides of the Safety Alert Seat will pulse two times. When an object is very close (<0.6 m (2 ft) in the vehicle rear, or <0.3 m (1 ft) in the vehicle front), five beeps will sound from the front or rear depending where the object is detected, or both sides of the Safety Alert Seat will pulse five times. Beeps for FPA are higher pitched than for RPA.

Backing Warning and Reverse Automatic Braking

Vehicles with Adaptive Cruise Control (ACC) have the Backing Warning and Reverse Automatic Braking (RAB) system. The Backing Warning part of this system can warn of rear objects when backing up at speeds greater than 8 km/h (5 mph).

The Backing Warning System will beep once from the rear when an object is first detected, or pulse twice on both sides of the Safety Alert Seat. When the system detects a potential crash, beeps will be heard from the rear, or five pulses will be felt on both sides of the Safety Alert Seat. There may also be a brief, sharp application of the brakes.

⚠ Warning

Object-ID=2711391 LMD=01-Dec-2011

The Backing Warning System only operates at speeds greater than 8 km/h (5 mph). It does not detect children, pedestrians, bicyclists, animals, or objects below the

(Continued)

Warning (Continued)

Object-ID=2711391 LMD=01-Dec-2011

bumper or that are too close or too far from the vehicle. In some situations, such as at higher backing speeds, there may not be enough time for the short, sharp application of the vehicle brake system to occur. To prevent injury, death, or vehicle damage, even with the Backing Warning System, always check the area around the vehicle and check all mirrors before backing.

When the vehicle is in R (Reverse), if the system detects the vehicle is backing too fast to avoid a crash with a detected object behind your vehicle in your path, it may automatically brake hard to a stop to help avoid or reduce the harm caused by a backing crash.

⚠ Warning

Object-ID=2711392 LMD=01-Dec-2015

RAB may not avoid many types of backing crashes. Do not wait for the automatic braking to apply. This system is not designed to replace driver braking and only works in R (Reverse) when an object is detected directly behind the vehicle. It may not brake or stop in time to avoid a crash. It will not brake for objects when the vehicle is moving at very low speeds. It does not detect children, pedestrians, bicyclists, animals, or objects below the bumper or that are too close or too far from the vehicle. To prevent injury, death, or vehicle damage, even with RAB, always check the area around the vehicle before and while backing.

Pressing the brake pedal after the vehicle comes to a stop will release the Reverse Automatic Braking. If the brake pedal is not pressed soon after the stop, the electric parking brake may be set. When it is safe, press the accelerator pedal firmly at any time to override the Reverse Automatic Braking.

⚠ Warning

Object-ID=2717457 LMD=01-Dec-2015

There may be instances where unexpected or undesired automatic braking occurs. If this happens, either press the brake pedal or firmly press the accelerator pedal to release the brakes from the RAB system. Before releasing the brakes, check the RVC screen and check the area around the vehicle to make sure it is safe to proceed.

Rear Cross Traffic Alert (RCTA)

If equipped, RCTA displays a red warning triangle with a left or right pointing arrow on the infotainment display to warn of traffic coming from the left or right. This system detects objects coming from up to 20 m (65 ft) from the left or right side of the vehicle. When an object is detected, either three beeps sound from the left or right or three Safety Alert Seat pulses occur on the left or right side, depending on the direction of the detected vehicle.

Use caution while backing up when towing a trailer, as the RCTA detection zones that extend out from the back of the vehicle do not move further back when a trailer is towed.

Turning the Features On or Off

2188641

The button on the center stack is used to turn on or off the Front and Rear Parking Assist, Rear Cross Traffic Alert, Backing Warning, and Reverse Automatic Braking system at the same time. The indicator light next to the button comes on when the features are on and turns off when the features have been disabled.

Turn off parking assist and Reverse Automatic Braking when towing a trailer.

To turn the rear parking assist symbols on or off, see "Rear Camera" under *Vehicle Personalization* ⇨ *158*.

RCTA can also be turned on or off through vehicle personalization. See "Collision/Detection Systems" under *Vehicle Personalization* ⇨ *158*.

Automatic Parking Assist (APA)

If equipped, APA searches for and steers the vehicle into parallel and perpendicular parking spots. When using APA, you must still shift gears, and control the brakes and accelerator. A display and audible beeps help to guide parking maneuvers.

⚠ Warning

Object-ID=3274091 LMD=18-Apr-2013

APA does not apply the brakes. APA may not detect objects in the parking space, objects that are soft or narrow, objects high off the

(Continued)

Warning (Continued)

Object-ID=3274091 LMD=18-Apr-2013

ground such as flatbed trucks, or objects below ground level such as large potholes. Always verify that the parking space is appropriate for parking a vehicle. APA does not respond to changes in the parking space, such as movement of an adjacent vehicle, or a person or object entering the parking space. APA does not detect or avoid traffic that is behind or alongside of the vehicle. Always be prepared to stop the vehicle during the parking maneuver.

Press P on the center stack to enable the system to search for a parking space that is large enough and within 1.5 m (5 ft) of the vehicle. The vehicle speed must be below 30 km/h (18 mph). The system cannot:

- Detect whether it is a legal parking space.
- Park exactly lined up with the vehicle next to it if the spot is approached at an angle or if the parking space is angled.
- Park exactly centered in a spot that is marked too large.
- Always detect short curbs.

If the vehicle is equipped with perpendicular parking mode, press and hold P during the search process to switch the APA parking mode between perpendicular and parallel parking.

APA searches for parking spaces to the right of the vehicle. To search for a parking space to the left, turn on the left turn signal.

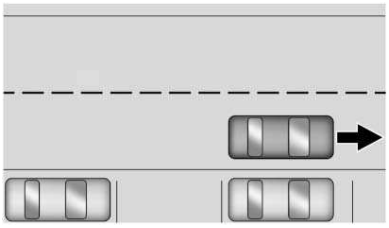

3267788

After completely passing a large enough space, an audible beep occurs and a red stop symbol is displayed.

If the vehicle is in R (Reverse), but does not steer into the expected space, this may be because the system is maneuvering the vehicle into a previously detected space. The APA system does not need service.

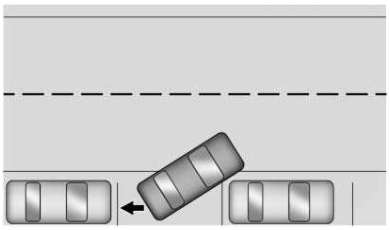

3267789

APA will instruct the vehicle to stop once a large enough space is found. Follow the displayed instructions. When instructed to drive in reverse, shift to R (Reverse) to engage automatic steering. The steering wheel will briefly vibrate as a reminder to remove hands from the steering wheel. Check surroundings and continue braking or accelerating as needed, and be prepared to stop to avoid vehicles, pedestrians, or objects.

If the vehicle exceeds 10 km/h (6 mph), APA is automatically disengaged and automatic steering will turn off. A progress arrow displays the status of the parking maneuver. Depending on the space size, additional maneuvers may be required, and there will be additional instructions. When changing gears, allow the automatic steering to complete before continuing the parking maneuver. Upon successful completion of a maneuver, APA will beep and display a PARKING COMPLETE message. Place the vehicle in P (Park).

APA may automatically disengage if:

- The steering wheel is used by the driver.
- The maximum allowed speed is exceeded.
- There is a failure with the APA system.
- Electronic stability control or antilock brakes are activated.
- A high priority vehicle message is displayed in the DIC.

To cancel APA, press P again.

When the System Does Not Seem to Work Properly

The APA system may require a short period of driving along curves to calibrate.

Assistance Systems for Driving

Object-ID=4279799 Owner=Owens, Lynnette LMD=19-Apr-2016 LMB=Owens, Lynnette

If equipped, when driving the vehicle in a forward gear, Forward Collision Alert (FCA), Lane Departure Warning (LDW), Lane Keep Assist (LKA), Side Blind Zone Alert (SBZA), Lane Change Alert (LCA), and/or Forward Automatic Braking (FAB) can help to avoid a crash or reduce crash damage.

Forward Collision Alert (FCA) System

Object-ID=4504274 Owner=Owens, Lynnette LMD=27-Apr-2016 LMB=Owens, Lynnette

If equipped, the FCA system may help to avoid or reduce the harm caused by front-end crashes. When approaching a vehicle ahead too quickly, FCA provides a flashing red alert on the windshield and rapidly beeps or pulses the Safety Alert Seat. FCA also lights an amber visual alert if following another vehicle much too closely.

FCA detects vehicles within a distance of approximately 60 m (197 ft) and operates at speeds above 40 km/h (25 mph). If the vehicle has Adaptive Cruise Control (ACC), it can detect vehicles to distances of approximately 110 m (360 ft) and operates at all speeds. See *Adaptive Cruise Control* ⇨ *240*.

⚠ Warning

Object-ID=2581961 LMD=10-Sep-2015

FCA is a warning system and does not apply the brakes. When approaching a slower-moving or stopped vehicle ahead too rapidly, or when following a vehicle too closely, FCA may not provide a warning with enough time to help avoid a crash. It also may not provide any warning at all. FCA does not warn of pedestrians, animals, signs, guardrails, bridges, construction barrels, or other objects. Be ready to take action and apply the brakes. See *Defensive Driving* ⇨ *201*.

FCA can be disabled with the FCA steering wheel control, or if your vehicle is equipped with Adaptive Cruise Control (ACC), through vehicle personalization. See “Collision/Detection Systems” under *Vehicle Personalization* ⇨ *158*.

Detecting the Vehicle Ahead

2625124

FCA warnings will not occur unless the FCA system detects a vehicle ahead. When a vehicle is detected, the vehicle ahead indicator will display green. Vehicles may not be detected on curves, highway exit ramps, or hills, due to poor visibility; or if a vehicle ahead is partially blocked by pedestrians or other objects. FCA will not detect another vehicle ahead until it is completely in the driving lane.

⚠ Warning

Object-ID=2581963 LMD=12-Dec-2011

FCA does not provide a warning to help avoid a crash, unless it detects a vehicle. FCA may not detect a vehicle ahead if the FCA sensor is blocked by dirt, snow, or ice, or if the windshield is damaged. It may also not detect a vehicle on winding or hilly roads, or in conditions that can limit visibility such as fog, rain, or snow, or if the headlamps or windshield are not cleaned or in proper condition. Keep the windshield, headlamps, and FCA sensors clean and in good repair.

Collision Alert

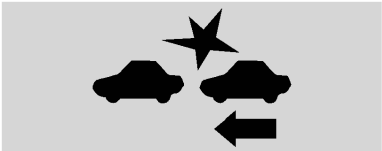

With Head-Up Display

2735462

Without Head-Up Display

2735596

When your vehicle approaches another detected vehicle too rapidly, the red FCA display will flash on the windshield. Also, eight high-pitched beeps will sound from the front, or both sides of the Safety Alert Seat will pulse five times. When this Collision Alert occurs, the brake system may prepare for driver braking to occur more rapidly which can cause a brief, mild deceleration. Continue to apply the brake pedal as needed. Cruise control may be disengaged when the Collision Alert occurs.

Tailgating Alert

2625124

The vehicle-ahead indicator will display amber when you are following a detected vehicle ahead much too closely.

Selecting the Alert Timing

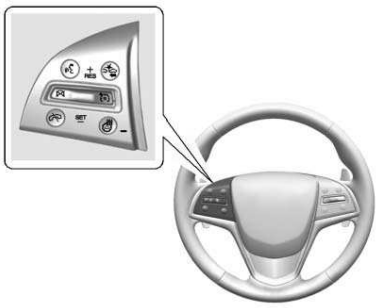

3287351

The Collision Alert control is on the steering wheel. Press to set the FCA timing to Far, Medium, Near, or on some vehicles, Off. The first button press shows the current setting on the DIC. Additional button presses will change this setting. The chosen setting will remain until it is changed and will affect the timing of both the Collision Alert and the Tailgating Alert features. The timing of both alerts will vary based on vehicle speed. The faster the vehicle speed, the farther away the alert will occur. Consider traffic and weather conditions when selecting the alert timing. The range of selectable alert timing may not be appropriate for all drivers and driving conditions.

If your vehicle is equipped with Adaptive Cruise Control (ACC), changing the FCA timing setting automatically changes the ACC following gap setting (Far, Medium, or Near).

Following Distance Indicator

The following distance to a moving vehicle ahead in your path is indicated in following time in seconds on the Driver Information Center (DIC). See *Driver Information Center (DIC)* ⇨ *140*. The minimum following time is 0.5 seconds away. If there is no vehicle detected ahead, or the vehicle ahead is out of sensor range, dashes will be displayed.

Unnecessary Alerts

FCA may provide unnecessary alerts for turning vehicles, vehicles in other lanes, objects that are not vehicles, or shadows. These alerts are normal operation and the vehicle does not need service.

Cleaning the System

If the FCA system does not seem to operate properly, cleaning the outside of the windshield in front of the rearview mirror, and cleaning the front of the vehicle where radar sensors are located, may correct the issue.

Forward Automatic Braking (FAB)

Object-ID=4017617 Owner=Owens, Lynnette
LMD=09-May-2016 LMB=Owens, Lynnette

If the vehicle has Adaptive Cruise Control (ACC), it also has FAB, which includes Intelligent Brake Assist (IBA). When the system detects a vehicle ahead in your path that is traveling in the same direction that you may be about to crash into, it can provide a boost to braking or automatically brake the vehicle. This can help avoid or lessen the severity of crashes when driving in a forward gear. Depending on the situation, the vehicle may automatically brake moderately or hard. This forward automatic braking can only occur if a vehicle is detected. This is shown by the FCA vehicle ahead indicator being lit. See *Forward Collision Alert (FCA) System* ⇨ *257*.

The system works when driving in a forward gear above 4 km/h (2 mph). It can detect vehicles up to approximately 60 m (197 ft).

⚠ Warning

Object-ID=4012781 LMD=20-Mar-2015

FAB is an emergency crash preparation feature and is not designed to avoid crashes. Do not rely on FAB to brake the vehicle. FAB will not brake outside of its operating speed range and only responds to detected vehicles.

FAB may not:

- Detect a vehicle ahead on winding or hilly roads.
- Detect all vehicles, especially vehicles with a trailer, tractors, muddy vehicles, etc.
- Detect a vehicle when weather limits visibility, such as in fog, rain, or snow.
- Detect a vehicle ahead if it is partially blocked by pedestrians or other objects.

(Continued)

Warning (Continued)

Object-ID=4012781 LMD=20-Mar-2015

Complete attention is always required while driving, and you should be ready to take action and apply the brakes and/or steer the vehicle to avoid crashes.

FAB may slow the vehicle to a complete stop to try to avoid a potential crash. If this happens, FAB may engage the Electric Parking Brake (EPB) to hold the vehicle at a stop. To release automatic braking, release the EPB or firmly press the accelerator pedal.

⚠ Warning

Object-ID=4012780 LMD=11-Nov-2014

FAB may automatically brake the vehicle suddenly in situations where it is unexpected and undesired. It could respond to a turning vehicle ahead, guardrails, signs, and other non-moving

(Continued)

Warning (Continued)

Object-ID=4012780 LMD=11-Nov-2014

objects. To override FAB, firmly press the accelerator pedal, if it is safe to do so.

Intelligent Brake Assist (IBA)

IBA may activate when the brake pedal is applied quickly by providing a boost to braking based on the speed of approach and distance to a vehicle ahead.

Minor brake pedal pulsations or pedal movement during this time is normal and the brake pedal should continue to be applied as needed. IBA will automatically disengage only when the brake pedal is released.

⚠ Warning

Object-ID=2711393 LMD=23-Jan-2012

IBA may increase vehicle braking in situations when it may not be necessary. You could block the flow

(Continued)

Warning (Continued)

Object-ID=2711393 LMD=23-Jan-2012

of traffic. If this occurs, take your foot off the brake pedal and then apply the brakes as needed.

FAB and IBA can be disabled through vehicle personalization. See "Collision/Detection Systems" under *Vehicle Personalization* ⇨ *158*.

⚠ Warning

Object-ID=4017574 LMD=11-Nov-2014

Using FAB or IBA while towing a trailer could cause you to lose control of the vehicle and crash. Turn the system to Off when towing a trailer.

Side Blind Zone Alert (SBZA)

Object-ID=3286805 Owner=Owens, Lynnette LMD=07-Oct-2015 LMB=Clark, Lorien

If equipped, the SBZA system is a lane-changing aid that assists drivers with avoiding crashes that occur with moving vehicles in the side blind zone (or spot) areas. When the vehicle is in a forward gear, the left or right side mirror display will light up if a moving vehicle is detected in that blind zone. If the turn signal is activated and a vehicle is also detected on the same side, the display will flash as an extra warning not to change lanes. Since this system is part of the Lane Change Alert (LCA) system, read the entire LCA section before using this feature.

Lane Change Alert (LCA)

Object-ID=3710352 Owner=Owens, Lynnette LMD=07-Oct-2015 LMB=Clark, Lorien

If equipped, the LCA system is a lane-changing aid that assists drivers with avoiding lane change crashes that occur with moving vehicles in the side blind zone (or spot) areas or with vehicles rapidly approaching these areas from behind. The LCA warning display will light up in the corresponding outside side mirror and will flash if the turn signal is on.

⚠ Warning

Object-ID=3275150 LMD=12-Feb-2013

LCA does not alert the driver to vehicles outside of the system detection zones, pedestrians, bicyclists, or animals. It may not provide alerts when changing lanes under all driving conditions. Failure to use proper care when changing lanes may result in injury, death, or vehicle damage. Before making a lane change, always check mirrors, glance over your shoulder, and use the turn signals.

LCA Detection Zones

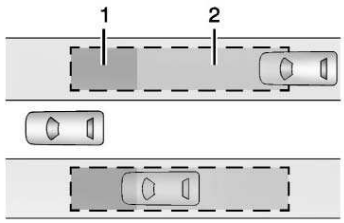

3289403

1. SBZA Detection Zone

2. LCA Detection Zone

The LCA sensor covers a zone of approximately one lane over from both sides of the vehicle, or 3.5 m (11 ft). The height of the zone is approximately between 0.5 m (1.5 ft) and 2 m (6 ft) off the ground. The Side Blind Zone Alert (SBZA) warning area starts at approximately the middle of the vehicle and goes back 5 m (16 ft). Drivers are also warned of vehicles rapidly approaching from up to 25 m (82 ft) behind the vehicle.

How the System Works

The LCA symbol lights up in the side mirrors when the system detects a moving vehicle in the next lane over that is in the side blind zone or rapidly approaching that zone from behind. A lit LCA symbol indicates it may be unsafe to change lanes. Before making a lane change, check the LCA display, check mirrors, glance over your shoulder, and use the turn signals.

Left Side Mirror Display

3275117

Right Side Mirror Display

3275124

When the vehicle is started, both outside mirror LCA displays will briefly come on to indicate the system is operating. When the vehicle is in a forward gear, the left or right side mirror display will light up if a moving vehicle is detected in the next lane over in that blind zone or rapidly approaching that zone. If the turn signal is activated in the same direction as a detected vehicle, this display will flash as an extra warning not to change lanes.

LCA can be disabled through vehicle personalization. See “Collision/ Detection Systems” under *Vehicle Personalization* ⇨ *158*. If LCA is disabled by the driver, the LCA mirror displays will not light up.

When the System Does Not Seem to Work Properly

The LCA system requires some driving for the system to calibrate to maximum performance. This calibration may occur more quickly if the vehicle is driven on a straight highway road with traffic and roadside objects (e.g., guardrails, barriers). During a trip, the LCA system is not operational until the vehicle first reaches a speed of 24 km/h (15 mph).

LCA displays may not come on when passing a vehicle quickly, for a stopped vehicle, or when towing a trailer. The LCA detection zones that extend back from the side of the vehicle do not move further back when a trailer is towed. Use caution while changing lanes when towing a trailer. LCA may alert to objects attached to the vehicle, such as a trailer, bicycle, or object extending out to either side of the vehicle. Attached objects may also interfere with the detection of vehicles. This is normal system operation; the vehicle does not need service.

LCA may not always alert the driver to vehicles in the next lane over, especially in wet conditions or when driving on sharp curves. The system does not need to be serviced. The system may light up due to guardrails, signs, trees, shrubs, and other non-moving objects. This is normal system operation; the vehicle does not need service.

LCA may not operate when the LCA sensors in the left or right corners of the rear bumper are covered with mud, dirt, snow, ice, or slush, or in heavy rainstorms. For cleaning instructions, see "Washing the Vehicle" under *Exterior Care* ⇨ *353*. If the DIC still displays the system unavailable message after cleaning both sides of the vehicle toward the rear corners of the vehicle, see your dealer.

If the LCA displays do not light up when moving vehicles are in the side blind zone or rapidly approaching this zone and the system is clean, the system may need service. Take the vehicle to your dealer.

When LCA is disabled for any reason other than the driver turning it off, the Lane Change Alert On option will not be available on the personalization menu.

Radio Frequency Information

See *Radio Frequency Statement (US/CAN)* ⇨ *397* or *Radio Frequency Statement (MEXICO1)* ⇨ *397* or *Radio Frequency Statement (MEXICO)* ⇨ *397*.

Lane Departure Warning (LDW)

Object-ID=3715997 Owner=Owens, Lynnette LMD=07-Oct-2015 LMB=Clark, Lorien

If equipped, LDW may help avoid crashes due to unintentional lane departures. It may provide a warning if the vehicle is crossing a detected lane marking without using a turn signal in the lane departure direction. Since this system is part of the Lane Keep Assist (LKA) system, read the entire LKA section before using this feature.

Lane Keep Assist (LKA)

Object-ID=3791277 Owner=Owens, Lynnette LMD=02-Mar-2016 LMB=Owens, Lynnette

If equipped, LKA may help avoid crashes due to unintentional lane departures. It may assist by gently turning the steering wheel if the vehicle approaches a detected lane marking without using a turn signal in that direction. It may also provide a Lane Departure Warning (LDW) system alert as the lane marking is crossed. The LKA system will not assist or provide an LDW alert if it detects that you are actively steering. Override LKA by turning the steering wheel. LKA uses a camera to detect lane markings between 60 km/h (37 mph) and 180 km/h (112 mph).

⚠ Warning

Object-ID=3683604 LMD=29-Oct-2014

The LKA system does not continuously steer the vehicle. It may not keep the vehicle in the

(Continued)

Warning (Continued)

Object-ID=3683604 LMD=29-Oct-2014

lane or give a Lane Departure Warning (LDW) alert, even if a lane marking is detected.

The LKA and LDW systems may not:

- Provide an alert or enough steering assist to avoid a lane departure or crash.
- Detect lane markings under poor weather or visibility conditions. This can occur if the windshield or headlamps are blocked by dirt, snow, or ice, if they are not in proper condition, or if the sun shines directly into the camera.
- Detect road edges.
- Detect lanes on winding or hilly roads.

If LKA only detects lane markings on one side of the road, it will only assist or provide an LDW alert

(Continued)

Warning (Continued)

Object-ID=3683604 LMD=29-Oct-2014

when approaching the lane on the side where it has detected a lane marking. Even with LKA and LDW, you must steer the vehicle. Always keep your attention on the road and maintain proper vehicle position within the lane, or vehicle damage, injury, or death could occur. Always keep the windshield, headlamps, and camera sensors clean and in good repair. Do not use LKA in bad weather conditions.

⚠ Warning

Object-ID=3767870 LMD=12-Mar-2014

Using LKA while towing a trailer or on slippery roads could cause loss of control of the vehicle and a crash. Turn the system off.

How the System Works

The LKA camera sensor is on the windshield ahead of the rearview mirror.

To turn LKA on and off, press on the center stack.

When on, is green if LKA is available to assist and provide LDW alerts. It may assist by gently turning the steering wheel and display as amber if the vehicle approaches a detected lane marking without using a turn signal in that direction. It may also provide an LDW alert by flashing amber as the lane marking is crossed. Additionally, there will be three beeps, or the driver seat will pulse three times, on the right or left, depending on the lane departure direction.

The LKA system does not continuously steer the vehicle. If LKA does not detect active driver steering, an alert and chime may be provided. Move the steering wheel to dismiss.

When the System Does Not Seem to Work Properly

The system performance may be affected by:

- Close vehicles ahead.
- Sudden lighting changes, such as when driving through tunnels.
- Banked roads.
- Roads with poor lane markings, such as two-lane roads.

If the LKA system is not functioning properly when lane markings are clearly visible, cleaning the windshield may help.

LKA assistance and/or LDW alerts may occur due to tar marks, shadows, cracks in the road, temporary or construction lane markings, or other road imperfections. This is normal system operation; the vehicle does not need service. Turn LKA off if these conditions continue.

Vehicle-to-Vehicle

Object-ID=4534578 Owner=Owens, Lynnette LMD=10-Jun-2016 LMB=Owens, Lynnette

If equipped, Vehicle-to-Vehicle (V2V) can communicate with other V2V–equipped vehicles to send and receive vehicle location, speed, direction, and notices regarding certain traffic situations from up to approximately 300 m (980 ft) away. Under certain conditions, V2V may provide notice of certain traffic situations, such as when other V2V-equipped vehicles ahead may be braking hard, disabled, on slippery roads, or in a crash.

V2V does not automatically brake or steer the vehicle.

⚠ Warning

Object-ID=4537855 LMD=09-Jun-2016

V2V features work only when other nearby vehicles equipped with V2V are detected and communications are received. V2V may not detect other V2V-equipped vehicles or receive communications under

(Continued)

Warning (Continued)

Object-ID=4537855 LMD=09-Jun-2016

certain conditions, including around tall buildings, in parking garages, around airports, in tunnels and underpasses, in an area with very dense trees or where the roof antenna is blocked by objects such as roof carriers, snow or ice. Communication failures or delays can occur and may not provide notice sufficiently in advance to help avoid a crash, or may not provide any notices at all. Pay attention to the road and operation of the vehicle at all times and be ready to take action and apply the brakes. See *Defensive Driving* ⇨ *201*.

⚠ Warning

Object-ID=4538108 LMD=10-Jun-2016

V2V does not detect or warn of pedestrians, animals, signs, guardrails, bridges, construction barrels, or other objects.

Under certain conditions, V2V can notify of situations that are beyond line-of-sight. It is important to understand the feature operation to be prepared when events that may not be seen immediately are detected.

Even if the V2V features are turned off through vehicle personalization, information from the vehicle is sent to other vehicles equipped with V2V. Other vehicles equipped with V2V may be alerted to certain events involving your vehicle, such as hard braking, activation of hazard warning flashers, an airbag deployment or a StabiliTrak, Traction Control or Antilock Brake System (ABS) event. V2V communications are not stored by the vehicle and cannot be used to identify owners or occupants or to later track the vehicle's location.

Unnecessary Alerts

V2V features may provide alerts to driving situations that are too early or unnecessary. These alerts are normal operation and the vehicle does not need service.

SERVICE VEHICLE SOON

If this message displays, V2V features may need service. Do not use them. Take the vehicle to your dealer.

V2V Hard Braking Ahead

When the vehicle is traveling above 30 km/h (19 mph), V2V may detect when a V2V-equipped vehicle ahead is braking hard. Under these conditions, V2V may display a Driver Information Center (DIC) message and icon.
If equipped, a red flashing alert on the windshield may also occur.

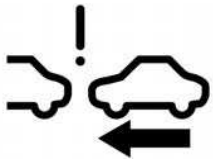

With Head-Up Display

4537854

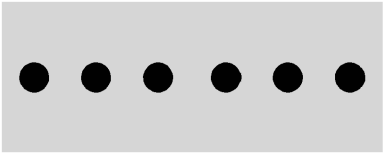

Without Head-Up Display

2735596

When a detected vehicle is braking extremely hard, rapid beeps or seat pulses may also occur.

To enable or disable this feature, see "Connected Vehicle Braking Alert" under *Vehicle Personalization* ⇨ *158*.

V2V Disabled Vehicle Ahead

When the vehicle is traveling above 20 km/h (13 mph), V2V may detect when a V2V-equipped vehicle ahead has a deployed airbag. When the vehicle is traveling above 60 km/h (38 mph), V2V may detect when a V2V-equipped vehicle ahead has warning flashers active and is moving slowly or has stopped. Under these disabled vehicle conditions, V2V may display a DIC message with the estimated distance to the vehicle.

A chime or two seat pulses may also occur.

TRAFFIC INFORMATION OFF

This message displays when the V2V Disabled Vehicle Ahead feature has been turned off.

To enable or disable this feature, see "Traffic and Roadside Information" under *Vehicle Personalization* ⇨ *158*.

V2V Slippery Road Ahead

When the vehicle is traveling above 20 km/h (13 mph), V2V may detect when a V2V-equipped vehicle ahead has a StabiliTrak, Traction Control, or Antilock Brake System (ABS) event. This could indicate that the road ahead is slippery or has low traction. Under these conditions, V2V may display a DIC message with the estimated distance to the vehicle.

TRAFFIC INFORMATION OFF

This message displays when the V2V Slippery Road Ahead feature has been turned off.

To enable or disable this feature, see "Traffic and Roadside Information" under *Vehicle Personalization* ⇨ *158*.

Fuel

Object-ID=4259108 Owner=Dobson, Bert
LMD=09-Jun-2016 LMB=Dobson, Bert

GM recommends the use of TOP TIER® detergent gasoline to keep the engine cleaner and reduce engine deposits. See www.toptiergas.com for a list of TOP TIER detergent gasoline marketers and applicable countries.

2201842

Do not use any fuel labeled E85 or FlexFuel. Do not use gasoline with ethanol levels greater than 15% by volume.

If the vehicle has an LGX 3.6L V6 engine, use regular unleaded gasoline meeting ASTM specification D4814 with a posted octane rating of 87 or higher. Do not use gasoline with a posted octane rating of less than 87, as this may cause engine knock and will lower fuel economy.

If the vehicle has an LTG 2.0L L4 Turbo engine, premium unleaded gasoline meeting ASTM specification D4814 with a posted octane rating of 93 is highly recommended for best performance and fuel economy. Unleaded gasoline with an octane rated as low as 87 can be used. Using unleaded gasoline rated below 93 octane, however, will lead to reduced acceleration and fuel economy. If knocking occurs, use a gasoline rated at 93 octane as soon as possible, otherwise, the engine could be damaged. If heavy knocking is heard when using gasoline with a 93 octane rating, the engine needs service.

If the vehicle has an LF3 3.6L V6 Twin Turbo or the LT4 V8 engine, use premium unleaded gasoline meeting ASTM specification D4814 with a

posted octane rating of 93.
If unavailable, unleaded gasoline with a posted octane rating of 91 may be used, but with reduced performance and fuel economy. If the octane is less than 91, the engine could be damaged and the repairs would not be covered by the vehicle warranty. If heavy knocking is heard when using gasoline rated at 93 octane, the engine needs service.

Prohibited Fuels

Caution

Object-ID=4213828 LMD=11-Jun-2015

Do not use fuels with any of the following conditions; doing so may damage the vehicle and void its warranty:

- For vehicles which are not FlexFuel, fuel labeled greater than 15% ethanol by volume, such as mid-level ethanol blends (16 – 50% ethanol), E85, or FlexFuel.

(Continued)

Caution (Continued)

Object-ID=4213828 LMD=11-Jun-2015

- Fuel with any amount of methanol, methylal, and aniline. These fuels can corrode metal fuel system parts or damage plastic and rubber parts.
- Fuel containing metals such as methylcyclopentadienyl manganese tricarbonyl (MMT), which can damage the emissions control system and spark plugs.
- Fuel with a posted octane rating of less than the recommended fuel. Using this fuel will lower fuel economy and performance, and may decrease the life of the emissions catalyst.

California Fuel Requirements

Object-ID=2157889 Owner=Dobson, Bert
LMD=13-Jan-2016 LMB=Dobson, Bert

If the vehicle is certified to meet California Emissions Standards, it is designed to operate on fuels that meet California specifications. See the underhood emission control label.
If this fuel is not available in states adopting California Emissions Standards, the vehicle will operate satisfactorily on fuels meeting federal specifications, but emission control system performance may be affected. The malfunction indicator lamp could turn on and the vehicle may not pass a smog-check test. See *Malfunction Indicator Lamp (Check Engine Light)* ⇨ *131*. If this occurs, return to your authorized dealer for diagnosis. If it is determined that the condition is caused by the type of fuel used, repairs may not be covered by the vehicle warranty.

Fuels in Foreign Countries

Object-ID=4245377 Owner=Dobson, Bert
LMD=22-Jul-2015 LMB=Dobson, Bert

The U.S., Canada, and Mexico post fuel octane ratings in anti-knock index (AKI). For fuel not to use in a foreign country, see "Prohibited Fuels" in *Fuel* ⇨ *267*.

Fuel Additives

Object-ID=4245380 Owner=Dobson, Bert
LMD=01-Sep-2015 LMB=Dobson, Bert

To keep fuel systems clean, TOP TIER Detergent Gasoline is recommended. See *Fuel* ⇨ *267*.

If TOP TIER Detergent Gasoline is not available, one bottle of GM Fuel System Treatment Cleaner added to the fuel tank at every engine oil change, can help. GM Fuel System Treatment Cleaner is the only gasoline additive recommended by General Motors. It is available at your dealer.

Filling the Tank

Object-ID=4066775 Owner=Dobson, Bert
LMD=11-Sep-2015 LMB=Dobson, Bert

⚠ Warning

Object-ID=2757399 LMD=22-Sep-2015

Fuel vapors and fuel fires burn violently and can cause injury or death.

- To help avoid injuries to you and others, read and follow all the instructions on the fuel pump island.
- Turn off the engine when refueling.
- Keep sparks, flames, and smoking materials away from fuel.
- Do not leave the fuel pump unattended.
- Do not use a cell phone while refueling.
- Do not reenter the vehicle while pumping fuel.

(Continued)

Warning (Continued)

Object-ID=2757399 LMD=22-Sep-2015

- Keep children away from the fuel pump and never let children pump fuel.
- Fuel can spray out if the refueling nozzle is inserted too quickly. This spray can happen if the tank is nearly full, and is more likely in hot weather. Insert the refueling nozzle slowly and wait for any hiss noise to stop prior to beginning to flow fuel.

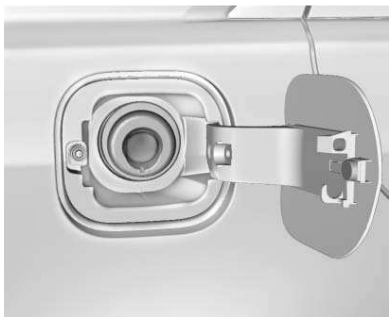

3266851

To open the fuel door, push and release the rearward center edge of the door. The fuel door is locked when the vehicle doors are locked. Press on the RKE transmitter to unlock. See *Remote Keyless Entry (RKE) System Operation* ⇨ *32*.

The vehicle has a capless refueling system and does not have a fuel cap. The filling nozzle must be fully inserted and latched prior to starting fuel flow.

⚠ Warning

Object-ID=4078871 LMD=05-Feb-2015

Overfilling the fuel tank by more than three clicks of a standard fill nozzle may cause:

- Vehicle performance issues, including engine stalling and damage to the fuel system.
- Fuel spills.
- Potential fuel fires.

Be careful not to spill fuel. Wait a few seconds after you have finished pumping before removing the nozzle.

Clean fuel from painted surfaces as soon as possible. See *Exterior Care* ⇨ *353*.

⚠ Warning

Object-ID=2208878 LMD=12-Nov-2008

If a fire starts while you are refueling, do not remove the nozzle. Shut off the flow of fuel by shutting off the pump or by notifying the station attendant. Leave the area immediately.

Filling the Tank with a Portable Gas Can

If the vehicle runs out of fuel and must be filled from a portable gas can:

1. Locate the capless funnel adapter from under the carpet in the trunk.
2. Insert and latch the funnel into the capless fuel system.

⚠ Warning

Object-ID=2757458 LMD=25-Jan-2012

Attempting to refuel without using the funnel adapter may cause fuel spillage and damage the capless fuel system. This could cause a fire and you or others could be badly burned and the vehicle could be damaged.

3. After filling the tank, remove and clean the funnel adapter and return it to the storage location.

Filling a Portable Fuel Container

Object-ID=2715590 Owner=Dobson, Bert LMD=13-Jan-2015 LMB=Rocha, Wendy

⚠ Warning

Object-ID=2715587 LMD=17-Sep-2012

Filling a portable fuel container while it is in the vehicle can cause fuel vapors that can ignite either by static electricity or other means.

(Continued)

Warning (Continued)

Object-ID=2715587 LMD=17-Sep-2012

You or others could be badly burned and the vehicle could be damaged. Always:

- Use approved fuel containers.
- Remove the container from the vehicle, trunk, or pickup bed before filling.
- Place the container on the ground.
- Place the nozzle inside the fill opening of the container before dispensing fuel, and keep it in contact with the fill opening until filling is complete.
- Fill the container no more than 95% full to allow for expansion.
- Do not smoke, light matches, or use lighters while pumping fuel.
- Avoid using cell phones or other electronic devices.

Trailer Towing

General Towing Information

Object-ID=2747511 Owner=Cusenza, Mark LMD=19-Feb-2015 LMB=Rocha, Wendy

Only use towing equipment that has been designed for the vehicle. Contact your dealer or trailering dealer for assistance with preparing the vehicle for towing a trailer. Read the entire section before towing a trailer.

For towing a disabled vehicle, see *Towing the Vehicle* ⇨ *350*. For towing the vehicle behind another vehicle such as a motor home, see *Recreational Vehicle Towing* ⇨ *351*.

Driving Characteristics and Towing Tips

Object-ID=4489144 Owner=Cusenza, Mark LMD=07-Apr-2016 LMB=Cusenza, Mark

Driving with a Trailer

When towing a trailer:

- Become familiar with the state and local laws that apply to trailer towing.
- Do not tow a trailer during the first 2 414 km (1,500 mi) to prevent damage to the engine, axle, or other parts.
- Then during the first 800 km (500 mi) of trailer towing, do not drive over 80 km/h (50 mph) and do not make starts at full throttle.
- Vehicles can tow in D (Drive). Shift the transmission to a lower gear if the transmission shifts too often under heavy loads and/or hilly conditions.
- Do not use Adaptive Cruise Control when towing.
- The Forward Automatic Braking System should be set to Off when towing. See *Forward Automatic Braking (FAB)* ⇨ *259*.
- Turn off Parking Assist when towing.

⚠ Warning

Object-ID=2755440 LMD=30-Jul-2015

When towing a trailer, exhaust gases may collect at the rear of the vehicle and enter if the liftgate, trunk/hatch, or rear-most window is open.

When towing a trailer:

- Do not drive with the liftgate, trunk/hatch, or rear-most window open.
- Fully open the air outlets on or under the instrument panel.
- Also adjust the climate control system to a setting that brings in only outside air. See "Climate Control Systems" in the Index.

For more information about carbon monoxide, see *Engine Exhaust* ⇨ *223*.

Towing a trailer requires a certain amount of experience. The combination you are driving is longer and not as responsive as the vehicle itself. Get acquainted with the handling and braking of the rig before setting out for the open road.

Before starting, check all trailer hitch parts and attachments, safety chains, electrical connectors, lamps, tires, and mirrors. If the trailer has electric brakes, start the combination moving and then apply the trailer brake controller by hand to be sure the brakes work.

During the trip, check occasionally to be sure that the load is secure and the lamps and any trailer brakes still work.

Following Distance

Stay at least twice as far behind the vehicle ahead as you would when driving the vehicle without a trailer. This can help to avoid heavy braking and sudden turns.

Passing

More passing distance is needed when towing a trailer. The combination will not accelerate as quickly and is longer so it is necessary to go much farther beyond the passed vehicle before returning to the lane.

Backing Up

Hold the bottom of the steering wheel with one hand. To move the trailer to the left, move that hand to the left. To move the trailer to the right, move your hand to the right. Always back up slowly and, if possible, have someone guide you.

Making Turns

Caution

Object-ID=2866716 LMD=06-Jan-2015

Making very sharp turns while trailering could cause the trailer to come in contact with the vehicle. The vehicle could be damaged. Avoid making very sharp turns while trailering.

When turning with a trailer, make wider turns than normal. Do this so the trailer will not strike soft

shoulders, curbs, road signs, trees, or other objects. Avoid jerky or sudden maneuvers. Signal well in advance.

If the trailer turn signal bulbs burn out, the arrows on the instrument cluster will still flash for turns. It is important to check occasionally to be sure the trailer bulbs are still working.

Driving on Grades

Reduce speed and shift to a lower gear *before* starting down a long or steep downgrade. If the transmission is not shifted down, the brakes might get hot and no longer work well.

Vehicles can tow in D (Drive). Shift the transmission to a lower gear if the transmission shifts too often under heavy loads and/or hilly conditions.

When towing at high altitude on steep uphill grades, consider the following: Engine coolant will boil at a lower temperature than at normal altitudes. If the engine is turned off immediately after towing at high altitude on steep uphill grades, the vehicle may show signs similar to engine overheating. To avoid this, let the engine run while parked, preferably on level ground, with the automatic transmission in P (Park) for a few minutes before turning the engine off. If the overheat warning comes on, see *Engine Overheating* ⇨ *299*.

Parking on Hills

⚠ Warning

Object-ID=2208389 LMD=11-Nov-2008

Parking the vehicle on a hill with the trailer attached can be dangerous. If something goes wrong, the rig could start to move. People can be injured, and both the vehicle and the trailer can be damaged. When possible, always park the rig on a flat surface.

If parking the rig on a hill:

1. Press the brake pedal, but do not shift into P (Park) yet. Turn the wheels into the curb if facing downhill or into traffic if facing uphill.
2. Have someone place chocks under the trailer wheels.
3. When the wheel chocks are in place, release the regular brakes until the chocks absorb the load.
4. Reapply the brake pedal. Then apply the parking brake and shift into P (Park).
5. Release the brake pedal.

Leaving After Parking on a Hill

1. Apply and hold the brake pedal.
2. Start the engine.
3. Shift into a gear.
4. Release the parking brake.
5. Let up on the brake pedal.
6. Drive slowly until the trailer is clear of the chocks.
7. Stop and have someone pick up and store the chocks.

Maintenance when Trailer Towing

The vehicle needs service more often when pulling a trailer. See *Maintenance Schedule* ⇨ *364*. Things that are especially important in trailer operation are automatic transmission fluid, engine oil, axle lubricant, belts,

cooling system, and brake system. It is a good idea to inspect these before and during the trip.

Check periodically to see that all hitch nuts and bolts are tight.

Trailer Towing (V6 Engine)

Object-ID=4429479 Owner=Cusenza, Mark LMD=29-Feb-2016 LMB=Cusenza, Mark

Before pulling a trailer, there are three important considerations that have to do with weight:

- The weight of the trailer.
- The weight of the trailer tongue.
- The total weight on your vehicle's tires.

Weight of the Trailer

How heavy can a trailer safely be?

It should never weigh more than 454 kg (1,000 lb). But even that can be too heavy.

It depends on how the rig is used. For example, speed, altitude, road grades, outside temperature, and how much the vehicle is used to pull a trailer are all important. It can depend on any special equipment on the vehicle, and the amount of tongue weight the vehicle can carry. See “Weight of the Trailer Tongue” later in this section.

Maximum trailer weight is calculated assuming only the driver is in the tow vehicle and it has all the required trailering equipment. The weight of additional optional equipment, passengers, and cargo in the tow vehicle must be subtracted from the maximum trailer weight.

Ask your dealer for trailering information or advice.

Weight of the Trailer Tongue

The tongue load (1) of any trailer is an important weight to measure because it affects the total gross weight of the vehicle. The Gross Vehicle Weight (GVW) includes the curb weight of the vehicle, any cargo carried in it, and the people who will be riding in the vehicle. If there are a lot of options, equipment, passengers, or cargo in the vehicle, it will reduce the tongue weight the vehicle can carry, which will also reduce the trailer weight the vehicle can tow. If towing a trailer, the tongue load must be added to the GVW because the vehicle will be carrying that weight, too. See *Vehicle Load Limits* ⇨ *211*.

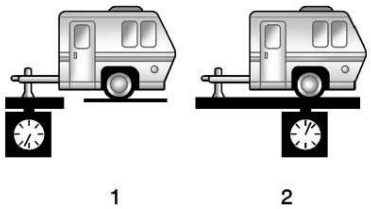

2744596

The trailer tongue (1) should weigh 10 to 15 percent of the total loaded trailer weight (2).

After loading the trailer, weigh the trailer and then the tongue, separately, to see if the weights are proper. If they are not, adjustments might be made by moving some items around in the trailer.

Total Weight on Your Vehicle's Tires

Be sure the vehicle's tires are inflated to the upper limit for cold tires. These numbers can be found on the Tire and Loading Information label. See *Vehicle Load Limits* ➪ *211*. Make sure not to go over the GVW limit for the vehicle, including the weight of the trailer tongue.

Trailer Towing (L4, V-Series, and Twin Turbo)

Object-ID=2244110 Owner=Cusenza, Mark LMD=03-Dec-2014 LMB=Rocha, Wendy

The vehicle is neither designed nor intended to tow a trailer.

Towing Equipment (V6 Engine)

Object-ID=2159581 Owner=Cusenza, Mark LMD=13-Jan-2015 LMB=Rocha, Wendy

Hitches

Use the correct hitch equipment. See your dealer or a hitch dealer for assistance.

- The rear bumper on the vehicle is not intended for hitches. Do not attach rental hitches or other bumper-type hitches to it. Use only a frame-mounted hitch that does not attach to the bumper.
- Will any holes be made in the body of the vehicle when the trailer hitch is installed? If so, seal the holes when the hitch is removed. If the holes are not sealed, dirt, water, and deadly carbon monoxide (CO) from the exhaust can get into the vehicle. See *Engine Exhaust* ➪ *223*.

Safety Chains

Always attach chains between the vehicle and the trailer. Cross the safety chains under the tongue of the trailer to help prevent the tongue from contacting the road if it becomes separated from the hitch. Leave enough slack so the rig can turn. Never allow safety chains to drag on the ground.

Trailer Brakes

Does the trailer have its own brakes? Be sure to read and follow the instructions for the trailer brakes so they are installed, adjusted, and maintained properly.

Because the vehicle has antilock brakes, do not tap into the vehicle's brake system. If this is done, both brake systems will not work well or at all.

Towing Equipment (L4, V-Series, and Twin Turbo)

Object-ID=2244110 Owner=Cusenza, Mark LMD=03-Dec-2014 LMB=Rocha, Wendy

The vehicle is neither designed nor intended to tow a trailer.

Conversions and Add-Ons

Add-On Electrical Equipment

Object-ID=4098093 Owner=Cusenza, Mark LMD=04-Mar-2015 LMB=Cusenza, Mark

⚠ Warning

Object-ID=4094341 LMD=26-May-2015

The Data Link Connector (DLC) is used for vehicle service and Emission Inspection/Maintenance testing. See *Malfunction Indicator Lamp (Check Engine Light)* ⇨ *131*. A device connected to the DLC — such as an aftermarket fleet or driver-behavior tracking device — may interfere with vehicle systems. This could affect vehicle operation and cause a crash. Such devices may also access information stored in the vehicle's systems.

Caution

Object-ID=2866723 LMD=26-May-2015

Some electrical equipment can damage the vehicle or cause components to not work and would not be covered by the vehicle warranty. Always check with your dealer before adding electrical equipment.

Add-on equipment can drain the vehicle's 12-volt battery, even if the vehicle is not operating.

The vehicle has an airbag system. Before attempting to add anything electrical to the vehicle, see *Servicing the Airbag-Equipped Vehicle* ⇨ *87* and *Adding Equipment to the Airbag-Equipped Vehicle* ⇨ *87*.

Cadillac CTS/CTS-V Owner Manual (GMNA-Localizing-U.S./Canada-2ndPrint-11254870) - 2017 - Final Review - 6/14/16

Vehicle Care

General Information

General Information 278
California Proposition 65 Warning 278
California Perchlorate Materials Requirements 278
Accessories and Modifications 279

Vehicle Checks

Doing Your Own Service Work 279
Hood 280
Engine Compartment Overview 281
Engine Oil 288
Engine Oil Life System 291
Automatic Transmission Fluid 292
Engine Air Cleaner/Filter 292
Cooling System 294
Engine Coolant 296
Engine Overheating 299
Washer Fluid 300
Brakes 301
Brake Fluid 302
Battery - North America 303
All-Wheel Drive 304
Starter Switch Check 305
Automatic Transmission Shift Lock Control Function Check 305
Park Brake and P (Park) Mechanism Check 306

Headlamp Aiming

Headlamp Aiming 306

Bulb Replacement

Bulb Replacement 307
Halogen Bulbs 307
High Intensity Discharge (HID) Lighting 307
LED Lighting 307
Back-Up Lamps 307
License Plate Lamp 308
Replacement Bulbs 308

Electrical System

Electrical System Overload 309
Fuses and Circuit Breakers 309
Engine Compartment Fuse Block 310
Instrument Panel Fuse Block 313
Rear Compartment Fuse Block 315

Wheels and Tires

Tires 318
All-Season Tires 319
Winter Tires 319
Run-Flat Tires 319
Low-Profile Tires 320
Summer Tires 321
Tire Sidewall Labeling 321
Tire Designations 322
Tire Terminology and Definitions 323
Tire Pressure 325
Tire Pressure for High-Speed Operation 327
Tire Pressure Monitor System ... 327
Tire Pressure Monitor Operation 328
Tire Inspection 331
Tire Rotation 331
When It Is Time for New Tires 333
Buying New Tires 334
Different Size Tires and Wheels 335
Uniform Tire Quality Grading ... 335
Wheel Alignment and Tire Balance 337
Wheel Replacement 337
Tire Chains 338
If a Tire Goes Flat 339
Tire Sealant and Compressor Kit 340
Storing the Tire Sealant and Compressor Kit 346

Jump Starting
Jump Starting - North America 347

Towing the Vehicle
Towing the Vehicle 350
Recreational Vehicle Towing 351

Appearance Care
Exterior Care 353
Interior Care 358
Floor Mats 360

General Information

Object-ID=2160439 Owner=Garcia, Sid
LMD=14-Jan-2015 LMB=Rocha, Wendy

For service and parts needs, visit your dealer. You will receive genuine GM parts and GM-trained and supported service people.

Genuine GM parts have one of these marks:

1966766

California Proposition 65 Warning

Object-ID=4297443 Owner=Garcia, Sid
LMD=30-Oct-2015 LMB=Garcia, Sid

WARNING: Most motor vehicles, including this one, as well as many of its service parts and fluids, contain and/or emit chemicals known to the State of California to cause cancer and birth defects or other reproductive harm. Engine exhaust, many parts and systems, many fluids, and some component wear by-products contain and/or emit these chemicals.

See *Battery - North America* ⇨ *303* and *Jump Starting - North America* ⇨ *347*.

California Perchlorate Materials Requirements

Object-ID=2160450 Owner=Garcia, Sid
LMD=14-Jan-2015 LMB=Rocha, Wendy

Certain types of automotive applications, such as airbag initiators, safety belt pretensioners, and lithium batteries contained in Remote Keyless Entry transmitters, may contain perchlorate materials. Special handling may be necessary. For

additional information, see www.dtsc.ca.gov/hazardouswaste/perchlorate.

Accessories and Modifications

Object-ID=2160458 Owner=Garcia, Sid LMD=29-Jan-2016 LMB=Garcia, Sid

Adding non-dealer accessories or making modifications to the vehicle can affect vehicle performance and safety, including such things as airbags, braking, stability, ride and handling, emissions systems, aerodynamics, durability, and electronic systems like antilock brakes, traction control, and stability control. These accessories or modifications could even cause malfunction or damage not covered by the vehicle warranty.

Damage to suspension components caused by modifying vehicle height outside of factory settings will not be covered by the vehicle warranty.

Damage to vehicle components resulting from modifications or the installation or use of non-GM certified parts, including control module or software modifications, is not covered under the terms of the vehicle warranty and may affect remaining warranty coverage for affected parts.

GM Accessories are designed to complement and function with other systems on the vehicle. See your dealer to accessorize the vehicle using genuine GM Accessories installed by a dealer technician.

Also, see *Adding Equipment to the Airbag-Equipped Vehicle* ➪ *87*.

Vehicle Checks

Doing Your Own Service Work

Object-ID=2874327 Owner=Garcia, Sid LMD=14-Jan-2015 LMB=Rocha, Wendy

⚠ Warning

Object-ID=2207522 LMD=07-Jun-2016

It can be dangerous to work on your vehicle if you do not have the proper knowledge, service manual, tools, or parts. Always follow owner's manual procedures and consult the service manual for your vehicle before doing any service work.

If doing some of your own service work, use the proper service manual. It tells you much more about how to service the vehicle than this manual can. To order the proper service manual, see *Service Publications Ordering Information (US/CAN)* ➪ *396*.

This vehicle has an airbag system. Before attempting to do your own service work, see *Servicing the Airbag-Equipped Vehicle* ⇨ *87*.

Keep a record with all parts receipts and list the mileage and the date of any service work performed. See *Maintenance Records* ⇨ *376*.

Caution

Object-ID=2826198 LMD=09-Apr-2012

Even small amounts of contamination can cause damage to vehicle systems. Do not allow contaminants to contact the fluids, reservoir caps, or dipsticks.

Hood

Object-ID=2911119 Owner=Garcia, Sid
LMD=15-Mar-2013 LMB=Garcia, Sid

To open the hood:

2098861

1. Pull the hood release lever with this symbol on it. It is on the lower left side of the instrument panel.

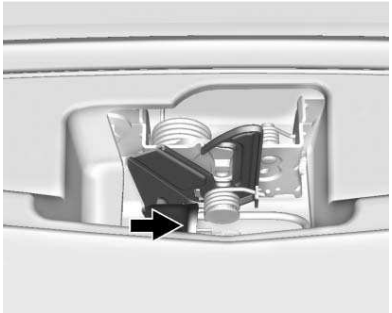

2911757

2. Go to the front of the vehicle to find the secondary hood release handle. The handle is under the front edge of the hood near the center. Push the handle to the right and at the same time raise the hood.

To close the hood:

Before closing the hood, be sure all filler caps are on properly. Then, bring the hood from full open to within 152 mm (6 in) of the closed position. Pause, then push the front center of the hood with a swift, firm motion to fully close the hood.

Cadillac CTS/CTS-V Owner Manual (GMNA-Localizing-U.S./Canada-2ndPrint-11254870) - 2017 - Final Review - 6/14/16

Engine Compartment Overview

Object-ID=3994042 Owner=Garcia, Sid LMD=21-Mar-2016 LMB=Garcia, Sid

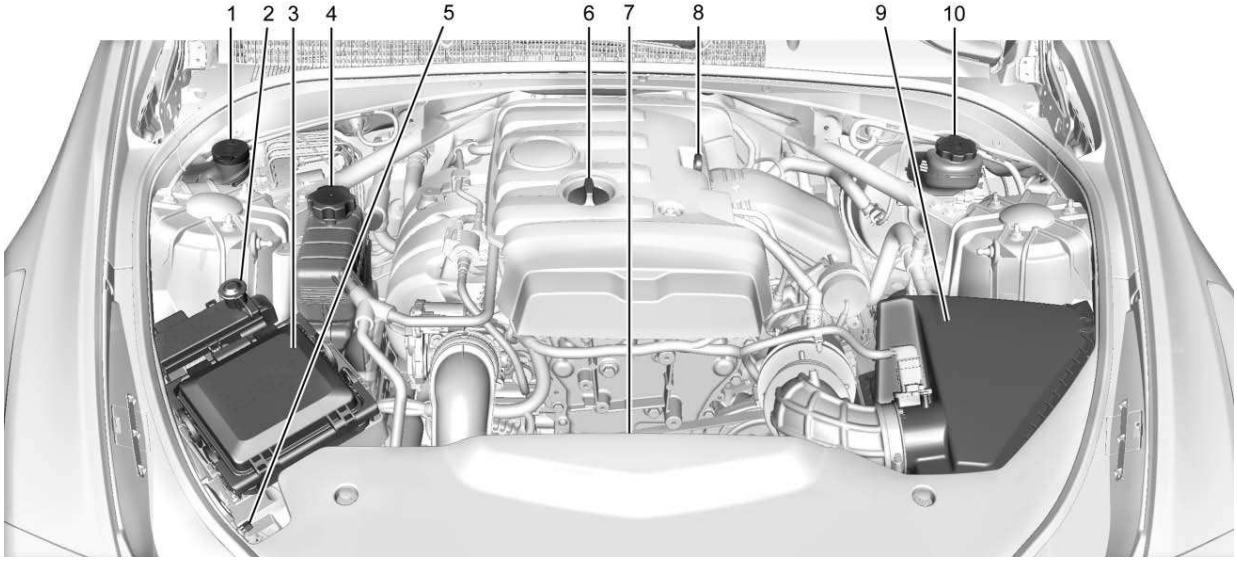

2.0L L4 Engine (LTG)

2910973

Cadillac CTS/CTS-V Owner Manual (GMNA-Localizing-U.S./Canada-2ndPrint-11254870) - 2017 - Final Review - 6/14/16

1. Windshield Washer Fluid Reservoir. See *Washer Fluid* ⇨ *300*.
2. Remote Positive (+) Battery Terminal. See *Jump Starting - North America* ⇨ *347*.
3. *Engine Compartment Fuse Block* ⇨ *310*.
4. Engine Coolant Surge Tank and Pressure Cap. See *Cooling System* ⇨ *294*.
5. Remote Negative (-) Battery Terminal. See *Jump Starting - North America* ⇨ *347*.
6. Engine Oil Fill Cap. See *Engine Oil* ⇨ *288*.
7. Engine Cooling Fan (Out of View). See *Cooling System* ⇨ *294*.
8. Engine Oil Dipstick. See *Engine Oil* ⇨ *288*.
9. *Engine Air Cleaner/Filter* ⇨ *292*.
10. Brake Fluid Reservoir. See *Brake Fluid* ⇨ *302*.

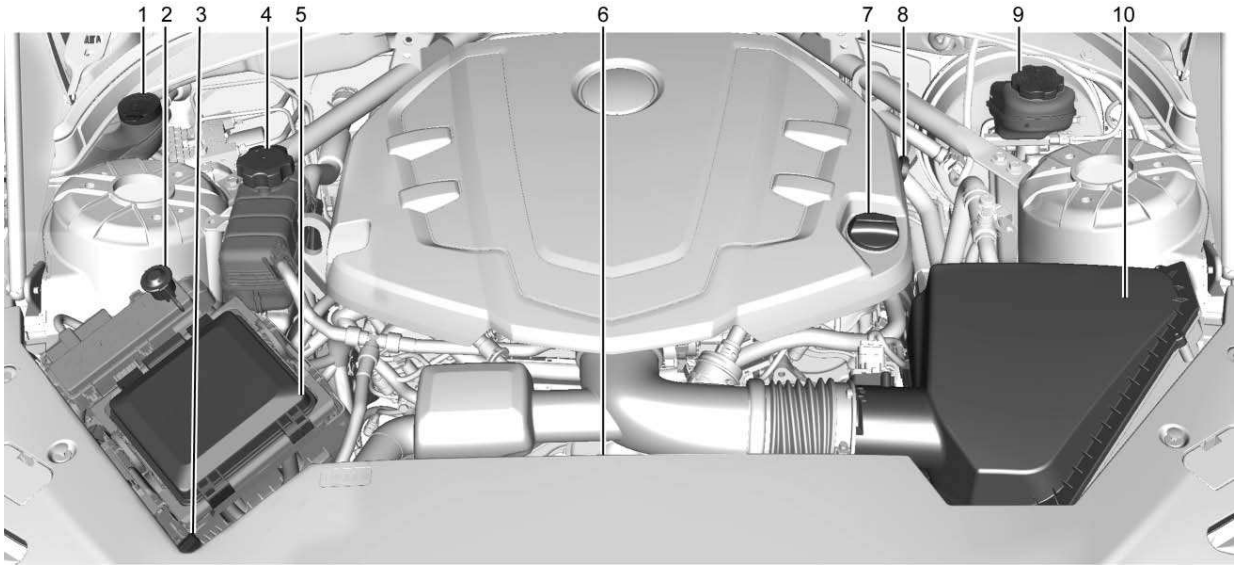

3.6L V6 Engine (LGX)

3975666

Cadillac CTS/CTS-V Owner Manual (GMNA-Localizing-U.S./Canada-2ndPrint-11254870) - 2017 - Final Review - 6/14/16

1. Windshield Washer Fluid Reservoir. See *Washer Fluid* ⇨ *300*.
2. Remote Positive (+) Battery Terminal. See *Jump Starting - North America* ⇨ *347*.
3. Remote Negative (-) Battery Terminal. See *Jump Starting - North America* ⇨ *347*.
4. Engine Coolant Surge Tank and Pressure Cap. See *Cooling System* ⇨ *294*.
5. *Engine Compartment Fuse Block* ⇨ *310*.
6. Engine Cooling Fan (Out of View). See *Cooling System* ⇨ *294*.
7. Engine Oil Fill Cap. See *Engine Oil* ⇨ *288*.
8. Engine Oil Dipstick. See *Engine Oil* ⇨ *288*.
9. Brake Fluid Reservoir. See *Brake Fluid* ⇨ *302*.
10. *Engine Air Cleaner/Filter* ⇨ *292*.

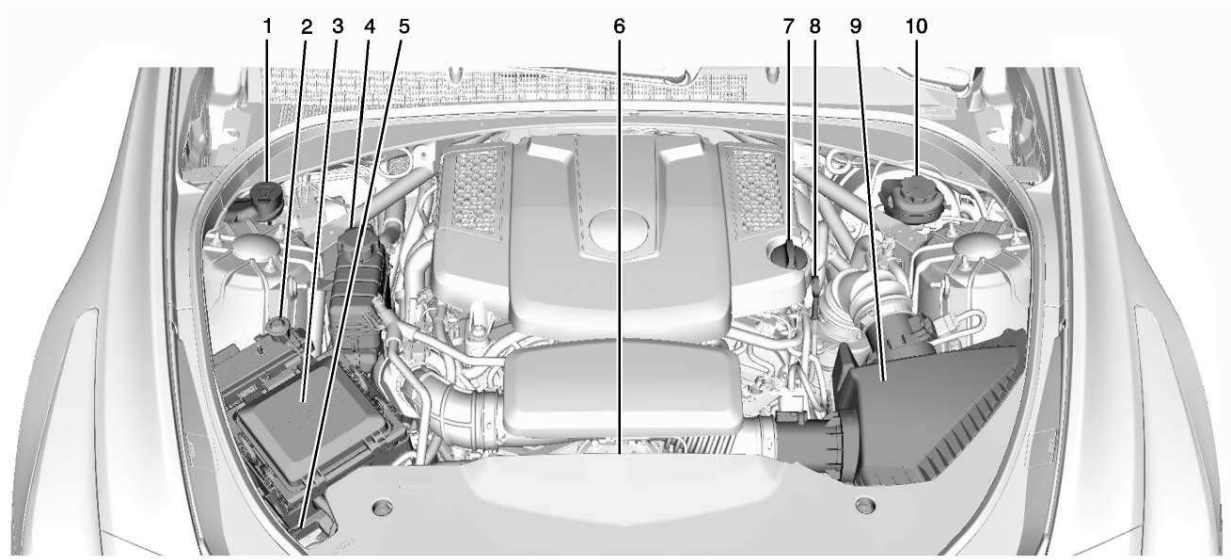

3.6L V6 Engine (LF3)

2910977

Cadillac CTS/CTS-V Owner Manual (GMNA-Localizing-U.S./Canada-2ndPrint-11254870) - 2017 - Final Review - 6/14/16

1. Windshield Washer Fluid Reservoir. See *Washer Fluid* ⇨ *300*.
2. Remote Positive (+) Battery Terminal. See *Jump Starting - North America* ⇨ *347*.
3. *Engine Compartment Fuse Block* ⇨ *310*.
4. Engine Coolant Surge Tank and Pressure Cap. See *Cooling System* ⇨ *294*.
5. Remote Negative (-) Battery Terminal. See *Jump Starting - North America* ⇨ *347*.
6. Engine Cooling Fan (Out of View). See *Cooling System* ⇨ *294*.
7. Engine Oil Fill Cap. See *Engine Oil* ⇨ *288*.
8. Engine Oil Dipstick. See *Engine Oil* ⇨ *288*.
9. *Engine Air Cleaner/Filter* ⇨ *292*.
10. Brake Fluid Reservoir. See *Brake Fluid* ⇨ *302*.

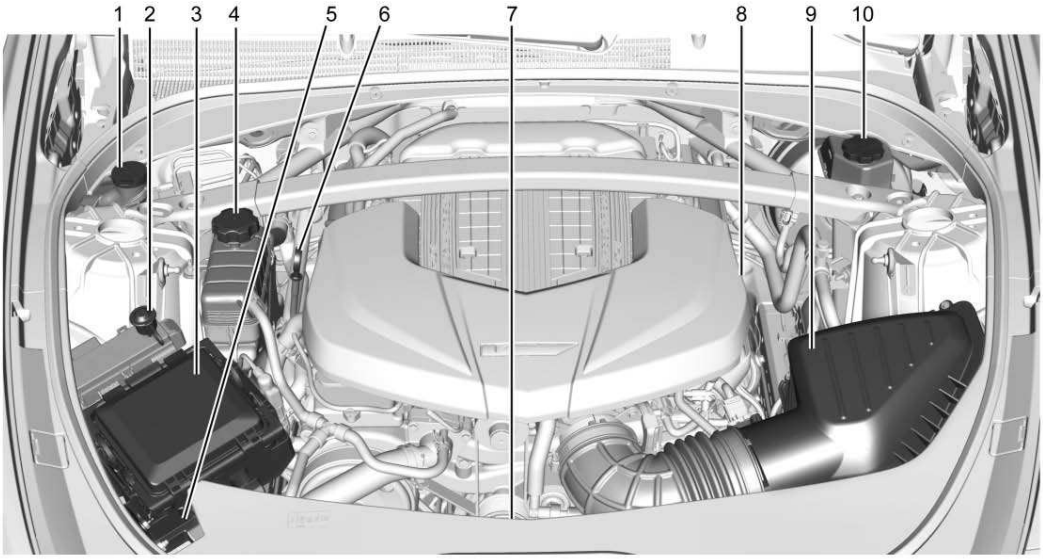

6.2L V8 Engine (LT4)

3993883

1. Windshield Washer Fluid Reservoir. See *Washer Fluid* ⇨ *300*.
2. Remote Positive (+) Battery Terminal. See *Jump Starting - North America* ⇨ *347*.
3. *Engine Compartment Fuse Block* ⇨ *310*.
4. Engine Coolant Surge Tank and Pressure Cap. See *Cooling System* ⇨ *294*.
5. Remote Negative (-) Battery Terminal. See *Jump Starting - North America* ⇨ *347*.
6. Engine Oil Dipstick. See *Engine Oil* ⇨ *288*.
7. Engine Cooling Fan (Out of View). See *Cooling System* ⇨ *294*.
8. Engine Oil Fill Cap (Out of View). See *Engine Oil* ⇨ *288*.
9. *Engine Air Cleaner/Filter* ⇨ *292*.
10. Brake Fluid Reservoir. See *Brake Fluid* ⇨ *302*.

Engine Oil

Object-ID=3952290 Owner=Dobson, Bert LMD=02-Jun-2016 LMB=Dobson, Bert

To ensure proper engine performance and long life, careful attention must be paid to engine oil. Following these simple, but important steps will help protect your investment:

- Use engine oil approved to the proper specification and of the proper viscosity grade. See “Selecting the Right Engine Oil” in this section.
- Check the engine oil level regularly and maintain the proper oil level. See “Checking Engine Oil” and “When to Add Engine Oil” in this section.
- Change the engine oil at the appropriate time. See *Engine Oil Life System* ⇨ *291*.
- Always dispose of engine oil properly. See “What to Do with Used Oil” in this section.

Checking Engine Oil

Check the engine oil level regularly, every 650 km (400 mi), especially prior to a long trip. The engine oil dipstick handle is a loop. See *Engine Compartment Overview* ⇨ *281* for the location.

⚠ Warning

Object-ID=2785448 LMD=05-Mar-2012

The engine oil dipstick handle may be hot; it could burn you. Use a towel or glove to touch the dipstick handle.

If a low oil Driver Information Center (DIC) message displays, check the oil level.

Follow these guidelines:

- To get an accurate reading, park the vehicle on level ground. Check the engine oil level after the engine has been off for at least two hours. Checking the engine oil level on steep grades or too soon after engine shutoff can result in incorrect readings. Accuracy

improves when checking a cold engine prior to starting. Remove the dipstick and check the level.

- If unable to wait two hours, the engine must be off for at least 15 minutes if the engine is warm, or at least 30 minutes if the engine is not warm. Pull out the dipstick, wipe it with a clean paper towel or cloth, then push it back in all the way. Remove it again, keeping the tip down, and check the level.

When to Add Engine Oil

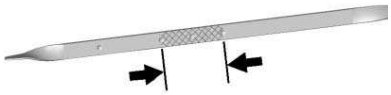

2.0L L4 Turbo (LTG)

3620936

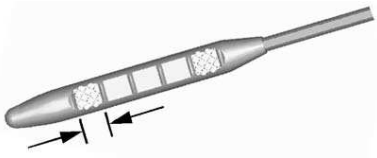

3.6L V6 Twin Turbo (LF3)

3608317

3.6L V6 (LGX) Shown, 6.2L V8 (LT4) Similar

2323437

If the oil is below the cross-hatched area at the tip of the dipstick and the engine has been off for at least 15 minutes, add 1 L (1 qt) of the recommended oil and then recheck the level. See “Selecting the Right Engine Oil” later in this section for an explanation of what kind of oil to use. For engine oil crankcase capacity, see *Capacities and Specifications* ⇨ *379*.

Caution

Object-ID=2869904 LMD=08-Jun-2012

Do not add too much oil. Oil levels above or below the acceptable operating range shown on the dipstick are harmful to the engine. If you find that you have an oil level above the operating range, i.e., the engine has so much oil that the oil level gets above the cross-hatched area that shows the proper operating range, the engine could be damaged. You should drain out the excess oil or limit driving of the vehicle and seek a service professional to remove the excess amount of oil.

See *Engine Compartment Overview* ⇨ *281* for the location of the engine oil fill cap.

Add enough oil to put the level somewhere in the proper operating range. Push the dipstick all the way back in when through.

Selecting the Right Engine Oil

Selecting the right engine oil depends on both the proper oil specification and viscosity grade. See *Recommended Fluids and Lubricants* ⇨ *372*.

Specification

Ask for and use engine oils that meet the dexos1™ specification. Engine oils that have been approved by GM as meeting the dexos1 specification are marked with the dexos1 approved logo. See www.gmdexos.com.

2398375

Caution

Object-ID=2826209 LMD=12-Jun-2015

Failure to use the recommended engine oil or equivalent can result in engine damage not covered by the vehicle warranty.

Viscosity Grade

Use SAE 5W-30 viscosity grade engine oil.

Cold Temperature Operation: In an area of extreme cold, where the temperature falls below –29 °C (–20 ° F), an SAE 0W-30 oil may be used. An oil of this viscosity grade will provide easier cold starting for the engine at extremely low temperatures. When selecting an oil of the appropriate viscosity grade, it is recommended to select an oil of the correct specification. See “Specification” earlier in this section.

Engine Oil Additives/Engine Oil Flushes

Do not add anything to the oil. The recommended oils meeting the dexos1 specification are all that is needed for good performance and engine protection.

Engine oil system flushes are not recommended and could cause engine damage not covered by the vehicle warranty.

What to Do with Used Oil

Used engine oil contains certain elements that can be unhealthy for your skin and could even cause cancer. Do not let used oil stay on your skin for very long. Clean your skin and nails with soap and water, or a good hand cleaner. Wash or properly dispose of clothing or rags containing used engine oil. See the manufacturer's warnings about the use and disposal of oil products.

Used oil can be a threat to the environment. If you change your own oil, be sure to drain all the oil from the filter before disposal. Never dispose of oil by putting it in the trash or pouring it on the ground, into sewers, or into streams or bodies of water. Recycle it by taking it to a place that collects used oil.

Cadillac CTS/CTS-V Owner Manual (GMNA-Localizing-U.S./Canada-2ndPrint-11254870) - 2017 - Final Review - 6/14/16

Engine Oil Life System

Object-ID=3218175 Owner=Dobson, Bert
LMD=20-Jul-2015 LMB=Dobson, Bert

When to Change Engine Oil

This vehicle has a computer system that indicates when to change the engine oil and filter. This is based on a combination of factors which include engine revolutions, engine temperature, and miles driven. Based on driving conditions, the mileage at which an oil change is indicated can vary considerably. For the oil life system to work properly, the system must be reset every time the oil is changed.

When the system has calculated that oil life has been diminished, it indicates that an oil change is necessary. A CHANGE ENGINE OIL SOON message comes on. See *Engine Oil Messages* ⇨ *149*. Change the oil as soon as possible within the next 1 000 km (600 mi). It is possible that, if driving under the best conditions, the oil life system might indicate that an oil change is not necessary for up to a year. The engine oil and filter must be changed at least once a year and at this time the system must be reset. Your dealer has trained service people who will perform this work and reset the system. It is also important to check the oil regularly over the course of an oil drain interval and keep it at the proper level.

If the system is ever reset accidentally, the oil must be changed at 5 000 km (3,000 mi) since the last oil change. Remember to reset the oil life system whenever the oil is changed.

How to Reset the Engine Oil Life System

Reset the system whenever the engine oil is changed so that the system can calculate the next engine oil change. To reset the system:

1. Using the DIC buttons, display REMAINING OIL LIFE on the DIC. See *Driver Information Center (DIC)* ⇨ *140* and *Engine Oil Messages* ⇨ *149*.
2. Press and hold SEL to clear the CHANGE ENGINE OIL SOON message and reset the oil life at 100%.

   Be careful not to reset the oil life display accidentally at any time other than after the oil is changed. It cannot be reset accurately until the next oil change.

The oil life system can also be reset as follows:

1. Turn the ignition on with the engine off.
2. Fully press and release the accelerator pedal three times within five seconds.

   If the CHANGE ENGINE OIL SOON message is not on, the system is reset.

The system is reset when the CHANGE ENGINE OIL SOON message is off.

If the CHANGE ENGINE OIL SOON message comes back on when the vehicle is started, the engine oil life system has not been reset. Repeat the procedure.

Automatic Transmission Fluid

Object-ID=2552859 Owner=Garcia, Sid
LMD=17-Jul-2015 LMB=Garcia, Sid

How to Check Automatic Transmission Fluid

It is not necessary to check the transmission fluid level.
A transmission fluid leak is the only reason for fluid loss. If a leak occurs, take the vehicle to your dealer and have it repaired as soon as possible.

The vehicle is not equipped with a transmission fluid level dipstick. There is a special procedure for checking and changing the transmission fluid. Because this procedure is difficult, this should be done at the dealer. Contact your dealer for additional information.

Change the fluid and filter at the intervals listed in *Maintenance Schedule* ⇨ *364*, and be sure to use the fluid listed in *Recommended Fluids and Lubricants* ⇨ *372*.

Engine Air Cleaner/Filter

Object-ID=3994046 Owner=Garcia, Sid
LMD=21-Mar-2016 LMB=Garcia, Sid

The engine air cleaner/filter is in the engine compartment on the driver side of the vehicle. See *Engine Compartment Overview* ⇨ *281*.

When to Inspect the Engine Air Cleaner/Filter

For intervals on changing and inspecting the engine air cleaner/filter, see *Maintenance Schedule* ⇨ *364*.

How to Inspect the Engine Air Cleaner/Filter

Do not start the engine or have the engine running with the engine air cleaner/filter housing open. Before removing the engine air cleaner/filter, make sure that the engine air cleaner/filter housing and nearby components are free of dirt and debris. Remove the engine air cleaner/filter. Lightly tap and shake the engine air cleaner/filter (away from the vehicle), to release loose dust and dirt. Inspect the engine air cleaner/filter for damage, and replace if damaged. Do not clean the engine air cleaner/filter or components with water or compressed air.

To inspect or replace the air cleaner/filter:

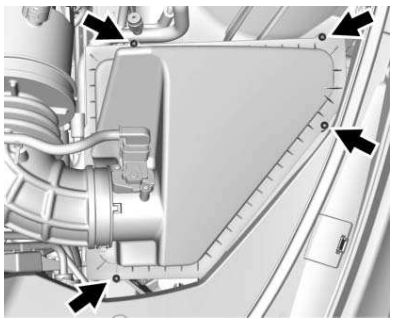

2.0L L4 Engine (LTG) Shown, 3.6L V6 Engine (LGX) Similar

4165985

1. Remove the four screws on top of the air cleaner/filter cover.
2. Lift the air/cleaner/filter cover away from the air cleaner/filter housing.
3. Pull out the air cleaner/filter.
4. Inspect or replace the air cleaner/filter.

5. Reverse Steps 1-3 to reinstall the air cleaner/filter cover.

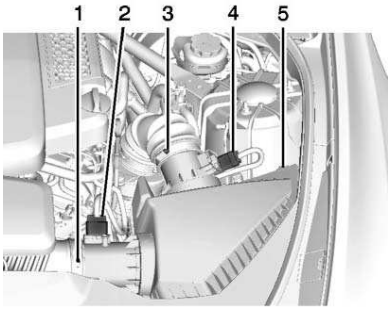

3.6L V6 Engine (LF3)

2910981

1. Lower Air Duct Clamp
2. Lower Electrical Connector
3. Upper Air Duct Clamp
4. Upper Electrical Connector
5. Screws

1. Disconnect the lower and upper outlet ducts by loosening the lower (1) and upper (3) air duct clamps.
2. Disconnect the lower (2) and upper (4) electrical connectors and wiring attachments to air cleaner/filter cover.
3. Remove the screws (5) on top of the air cleaner/filter cover.
4. Lift the air cleaner/filter cover away from the air cleaner/filter housing.
5. Pull out the air cleaner/filter.
6. Inspect or replace the air cleaner/filter.
7. Reverse Steps 1-5 to reinstall the air cleaner/filter cover.

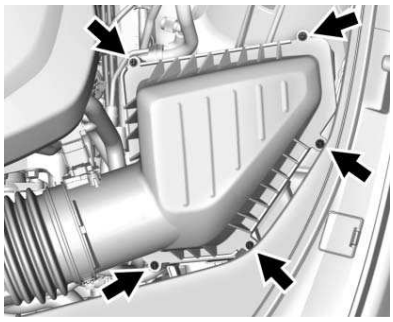

6.2L V8 Engine (LT4)

4165991

1. Remove the screws on top of the air cleaner/filter cover.
2. Lift the air cleaner/filter cover away from the air cleaner/filter housing.
3. Pull out the air cleaner/filter.
4. Inspect or replace the air cleaner/filter.
5. Reverse Steps 1-3 to reinstall the air cleaner/filter cover.

⚠ Warning

Object-ID=2207942 LMD=12-May-2009

Operating the engine with the air cleaner/filter off can cause you or others to be burned. The air cleaner not only cleans the air; it helps to stop flames if the engine backfires. Use caution when working on the engine and do not drive with the air cleaner/filter off.

Caution

Object-ID=2834090 LMD=18-Apr-2012

If the air cleaner/filter is off, dirt can easily get into the engine, which could damage it. Always have the air cleaner/filter in place when you are driving.

Cooling System

Object-ID=3994049 Owner=Garcia, Sid
LMD=21-Mar-2016 LMB=Garcia, Sid

The cooling system allows the engine to maintain the correct working temperature.

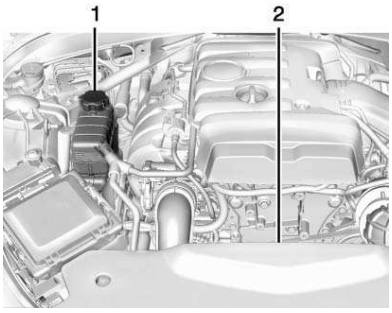

2.0L L4 Engine (LTG)

2910984

1. Engine Coolant Surge Tank and Pressure Cap
2. Engine Cooling Fan (Out of View)

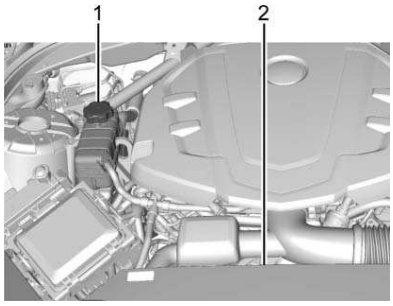

3.6L V6 Engine (LGX)

3975669

1. Engine Coolant Surge Tank and Pressure Cap
2. Engine Cooling Fan (Out of View)

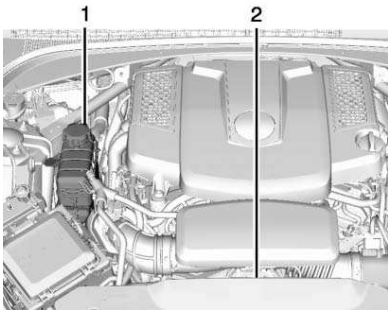

3.6L V6 Engine (LF3)

2910987

1. Engine Coolant Surge Tank and Pressure Cap
2. Engine Cooling Fan (Out of View)

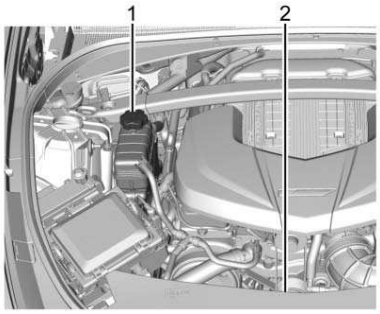

6.2L V8 Engine (LT4)

3993891

1. Engine Coolant Surge Tank and Pressure Cap
2. Engine Cooling Fan (Out of View)

⚠ Warning

Object-ID=2208422 LMD=11-Nov-2008

An electric engine cooling fan under the hood can start up even when the engine is not running and can cause injury. Keep hands, clothing, and tools away from any underhood electric fan.

⚠ Warning

Object-ID=2208428 LMD=11-Nov-2008

Heater and radiator hoses, and other engine parts, can be very hot. Do not touch them. If you do, you can be burned.

Do not run the engine if there is a leak. If you run the engine, it could lose all coolant. That could cause an engine fire, and you could be burned. Get any leak fixed before you drive the vehicle.

Caution

Object-ID=2834099 LMD=18-Apr-2012

Using coolant other than DEX-COOL® can cause premature engine, heater core, or radiator corrosion. In addition, the engine coolant could require changing sooner. Any repairs would not be covered by the vehicle warranty. Always use DEX-COOL (silicate-free) coolant in the vehicle.

Engine Coolant

Object-ID=3994051 Owner=Garcia, Sid
LMD=15-Apr-2015 LMB=Garcia, Sid

The cooling system in the vehicle is filled with DEX-COOL engine coolant. See *Maintenance Schedule* ⇨ *364* and *Recommended Fluids and Lubricants* ⇨ *372*.

The following explains the cooling system and how to check and add coolant when it is low. If there is a problem with engine overheating, see *Engine Overheating* ⇨ *299*.

What to Use

⚠ Warning

Object-ID=2208429 LMD=14-Jun-2010

Adding only plain water or some other liquid to the cooling system can be dangerous. Plain water and other liquids, can boil before the proper coolant mixture will. The coolant warning system is set for the proper coolant mixture. With plain water or the wrong mixture, the engine could get too hot but

(Continued)

Warning (Continued)

Object-ID=2208429 LMD=14-Jun-2010

you would not get the overheat warning. The engine could catch fire and you or others could be burned. Use a 50/50 mixture of clean, drinkable water and DEX-COOL coolant.

Use a 50/50 mixture of clean drinkable water and DEX-COOL coolant. This mixture:

- Gives freezing protection down to –37 °C (–34 °F), outside temperature.
- Gives boiling protection up to 129 °C (265 °F), engine temperature.
- Protects against rust and corrosion.
- Will not damage aluminum parts.
- Helps keep the proper engine temperature.

Caution

Object-ID=2834159 LMD=01-Nov-2012

If improper coolant mixture, inhibitors, or additives are used in the vehicle cooling system, the engine could overheat and be damaged. Too much water in the mixture can freeze and crack engine cooling parts. The repairs would not be covered by the vehicle warranty. Use only the proper mixture of engine coolant for the cooling system. See *Recommended Fluids and Lubricants* ⇨ *372*.

Never dispose of engine coolant by putting it in the trash, pouring it on the ground, or into sewers, streams, or bodies of water. Have the coolant changed by an authorized service center, familiar with legal requirements regarding used coolant disposal. This will help protect the environment and your health.

Checking Coolant

The vehicle must be on a level surface when checking the coolant level.

It is normal to see coolant moving in the upper coolant hose return line when the engine is running. It is also normal to see bubbles entering the surge tank through the small hose.

Check to see if coolant is visible in the coolant surge tank. If the coolant inside the coolant surge tank is boiling, do not do anything else until it cools down.

If coolant is visible but the coolant level is not at or above the COLD FILL line, add a 50/50 mixture of clean drinkable water and DEX-COOL coolant.

Be sure the cooling system is cool before this is done.

It is normal for the coolant level in the bottom chamber to rise and fall with operating temperature and ambient conditions. Coolant will evaporate from the bottom chamber in normal operation. This will happen faster when the vehicle is driven for long periods in hot, dry conditions.

If no coolant is visible in the coolant surge tank, add coolant as follows:

How to Add Coolant to the Coolant Surge Tank

Caution

Object-ID=2834128 LMD=18-Apr-2012

This vehicle has a specific coolant fill procedure. Failure to follow this procedure could cause the engine to overheat and be severely damaged.

If no problem is found, check to see if coolant is visible in the coolant surge tank. If coolant is visible but the coolant level is not at the bottom of the fill neck, add a 50/50 mixture of clean, drinkable water and DEX-COOL coolant at the coolant surge tank, but be sure the cooling system, including the coolant surge tank pressure cap, is cool before you do it.

⚠ Warning

Object-ID=2726085 LMD=12-Oct-2011

Steam and scalding liquids from a hot cooling system can blow out and burn you badly. Never turn the

(Continued)

Warning (Continued)

Object-ID=2726085 LMD=12-Oct-2011

cap when the cooling system, including the surge tank pressure cap, is hot. Wait for the cooling system and surge tank pressure cap to cool.

⚠ Warning

Object-ID=2208429 LMD=14-Jun-2010

Adding only plain water or some other liquid to the cooling system can be dangerous. Plain water and other liquids, can boil before the proper coolant mixture will. The coolant warning system is set for the proper coolant mixture. With plain water or the wrong mixture, the engine could get too hot but you would not get the overheat warning. The engine could catch fire and you or others could be burned. Use a 50/50 mixture of clean, drinkable water and DEX-COOL coolant.

Caution

Object-ID=2834137 LMD=27-Jun-2012

In cold weather, water can freeze and crack the engine, radiator, heater core, and other parts. Use the recommended coolant and the proper coolant mixture.

⚠ Warning

Object-ID=2208433 LMD=11-Nov-2008

You can be burned if you spill coolant on hot engine parts. Coolant contains ethylene glycol and it will burn if the engine parts are hot enough. Do not spill coolant on a hot engine.

1. Remove the coolant surge tank pressure cap from the top chamber when the cooling system, including the coolant surge tank pressure cap and upper radiator hose, is no longer hot.

   Turn the pressure cap slowly counterclockwise. If you hear a hiss, wait for that to stop. This will allow any pressure still left to be vented out the discharge hose.

2. Keep turning the pressure cap slowly and remove it. Open the surge tank service port cap to the lower chamber. The service port is behind the top chamber.

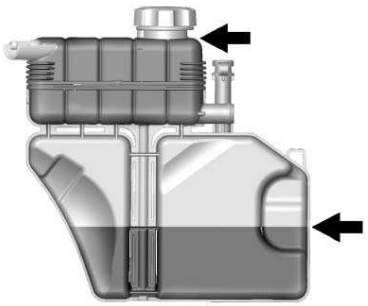

2746335

3. Fill the surge tank top chamber with the proper DEX-COOL coolant mixture to the bottom of the fill neck. The top chamber needs to be completely full. Fill the surge tank bottom chamber through the service port to approximately half.

4. With the coolant surge tank pressure cap off and the surge tank service port cap open, start the engine and let it run until you can feel the upper radiator hose getting hot. Watch out for the engine cooling fan(s).

   By this time, the coolant level inside the coolant surge tank top chamber may be lower. If the level is lower, add more of the proper DEX-COOL coolant mixture to the surge tank top chamber until the level reaches the bottom of the fill neck.

5. Replace the surge tank pressure cap tightly and close the surge tank service port cap.

Caution

Object-ID=2874477 LMD=15-Jun-2012

If the pressure cap is not tightly installed, coolant loss and possible engine damage may occur. Be sure the cap is properly and tightly secured.

Check the level in the surge tank top and bottom chambers when the cooling system has cooled down. If the coolant is not at the proper levels, repeat Steps 1–3 and reinstall the pressure cap and close the service port. If the coolant still is not at the proper levels when the system cools down again, see your dealer.

Engine Overheating

Object-ID=4060174 Owner=Garcia, Sid LMD=09-Jan-2015 LMB=Garcia, Sid

The vehicle has an indicator to warn of the engine overheating.

If the decision is made not to lift the hood when this warning appears, get service help right away. See *Roadside Service (US/CAN)* ⇨ *388* or *Roadside Service (MEXICO)* ⇨ *390*.

If the decision is made to lift the hood, make sure the vehicle is parked on a level surface.

Then check to see if the engine cooling fan is running. If the engine is overheating, the fan should be running. If it is not, do not continue to run the engine. Have the vehicle serviced.

Caution

Object-ID=2834161 LMD=01-Nov-2012

Running the engine without coolant may cause damage or a fire. Vehicle damage would not be covered by the vehicle warranty.

If Steam Is Coming from the Engine Compartment

⚠ Warning

Object-ID=2210484 LMD=18-May-2010

Steam from an overheated engine can burn you badly, even if you just open the hood. Stay away from the engine if you see or hear steam coming from it. Just turn it off and get everyone away from the vehicle until it cools down. Wait until there is no sign of steam or coolant before you open the hood.

If you keep driving when the engine is overheated, the liquids in it can catch fire. You or others could be badly burned. Stop the engine if it overheats, and get out of the vehicle until the engine is cool.

If Steam Is Coming from the Engine Compartment with No Overheat Warning (V-Series Only)

The V-Series hood vent is functional, and will allow water from rain and car washes to enter the engine compartment and contact hot surfaces. If steam is seen coming from the hood vent with no accompanying overheat warning, no action is required.

If No Steam Is Coming from the Engine Compartment

If an engine overheat warning is displayed but no steam can be seen or heard, the problem may not be too serious. Sometimes the engine can get a little too hot when the vehicle:

- Climbs a long hill on a hot day.
- Stops after high-speed driving.
- Idles for long periods in traffic.

If the overheat warning is displayed with no sign of steam:

1. Turn the air conditioning off.
2. Turn the heater on to the highest temperature and to the highest fan speed. Open the windows as necessary.
3. When it is safe to do so, pull off the road, shift to P (Park) or N (Neutral) and let the engine idle.

If the overheat warning no longer displays, the vehicle can be driven. Continue to drive the vehicle slowly for about 10 minutes. Keep a safe vehicle distance from the vehicle in front. If the warning does not come back on, continue to drive normally and have the cooling system checked for proper fill and function.

If the warning continues, pull over, stop, and park the vehicle right away.

If there is no sign of steam, idle the engine for three minutes while parked. If the warning is still displayed, turn off the engine until it cools down.

Washer Fluid

Object-ID=2911127 Owner=Garcia, Sid
LMD=18-Sep-2012 LMB=Garcia, Sid

What to Use

When windshield washer fluid is needed, be sure to read the manufacturer's instructions before use. If operating the vehicle in an area where the temperature may fall below freezing, use a fluid that has sufficient protection against freezing.

Adding Washer Fluid

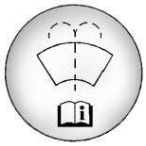

2197472

Open the cap with the washer symbol on it. Add washer fluid until the tank is full. See *Engine Compartment Overview* ⇨ *281* for reservoir location.