Caution

Object-ID=2834166 LMD=16-Apr-2015

- Do not use washer fluid that contains any type of water repellent coating. This can cause the wiper blades to chatter or skip.
- Do not use engine coolant (antifreeze) in the windshield washer. It can damage the windshield washer system and paint.
- Do not mix water with ready-to-use washer fluid. Water can cause the solution to freeze and damage the washer fluid tank and other parts of the washer system.
- When using concentrated washer fluid, follow the manufacturer instructions for adding water.
- Fill the washer fluid tank only three-quarters full when it is very cold. This allows for fluid expansion if freezing

(Continued)

Caution (Continued)

Object-ID=2834166 LMD=16-Apr-2015

occurs, which could damage the tank if it is completely full.

Brakes

Object-ID=4100180 Owner=Dobson, Bert LMD=30-Apr-2015 LMB=Dobson, Bert

Disc brake pads have built-in wear indicators that make a high-pitched warning sound when the brake pads are worn and new pads are needed. The sound can come and go or be heard all the time when the vehicle is moving, except when applying the brake pedal firmly.

⚠ Warning

Object-ID=2207966 LMD=03-Feb-2010

The brake wear warning sound means that soon the brakes will not work well. That could lead to a crash. When the brake wear warning sound is heard, have the vehicle serviced.

Caution

Object-ID=2826220 LMD=09-Apr-2012

Continuing to drive with worn-out brake pads could result in costly brake repair.

Some driving conditions or climates can cause a brake squeal when the brakes are first applied or lightly applied. This does not mean something is wrong with the brakes.

If equipped with high performance brake linings, there could be an increased build-up of brake dust as well as minor noises as compared to standard brake linings.

Properly torqued wheel nuts are necessary to help prevent brake pulsation. When tires are rotated, inspect brake pads for wear and evenly tighten wheel nuts in the proper sequence to torque specifications. See *Capacities and Specifications* ⇨ *379*.

Brake pads should be replaced as complete sets.

Brake Pedal Travel

See your dealer if the brake pedal does not return to normal height, or if there is a rapid increase in pedal travel. This could be a sign that brake service may be required.

Replacing Brake System Parts

Always replace brake system parts with new, approved replacement parts. If this is not done, the brakes may not work properly. The braking performance expected can change in many other ways if the wrong replacement brake parts are installed or parts are improperly installed.

Cold Weather Brake Operation (CTS-V Model)

High performance brake components may bind and clunk when moving the vehicle. This may be noticeable after parking when the brakes have been wet, such as when driving in the rain or after a car wash. This is normal for brakes with high friction pads and does not affect the operation of the brakes. Apply the brakes several times until the binding or clunking stops.

Drive the vehicle and apply the brakes several times if it is washed before long-term storage.

Brake Fluid

Object-ID=2826329 Owner=Dobson, Bert
LMD=27-Jul-2015 LMB=Dobson, Bert

1987353

The brake master cylinder reservoir is filled with GM approved DOT 3 brake fluid as indicated on the reservoir cap. See *Engine Compartment Overview* ⇨ *281* for the location of the reservoir.

Checking Brake Fluid

With the vehicle in P (Park) on a level surface, the brake fluid level should be between the minimum and maximum marks on the brake fluid reservoir.

There are only two reasons why the brake fluid level in the reservoir may go down:

- Normal brake lining wear. When new linings are installed, the fluid level goes back up.
- A fluid leak in the brake hydraulic system. Have the brake hydraulic system fixed. With a leak, the brakes will not work well.

Always clean the brake fluid reservoir cap and the area around the cap before removing it.

Do not top off the brake fluid. Adding fluid does not correct a leak. If fluid is added when the linings are worn, there will be too much fluid when new brake linings are installed. Add or remove fluid, as necessary, only when work is done on the brake hydraulic system.

⚠ Warning

Object-ID=2217380 LMD=30-Mar-2015

If too much brake fluid is added, it can spill on the engine and burn, if the engine is hot enough. You or others could be burned, and the

(Continued)

Warning (Continued)

Object-ID=2217380 LMD=30-Mar-2015

vehicle could be damaged. Add brake fluid only when work is done on the brake hydraulic system.

When the brake fluid falls to a low level, the brake warning light comes on. See *Brake System Warning Light* ⇨ *133*.

Brake fluid absorbs water over time which degrades the effectiveness of the brake fluid. Replace brake fluid at the specified intervals to prevent increased stopping distance. See *Maintenance Schedule* ⇨ *364*.

What to Add

Use only GM approved DOT 3 brake fluid from a clean, sealed container. See *Recommended Fluids and Lubricants* ⇨ *372*.

⚠ Warning

Object-ID=2217382 LMD=27-Jul-2015

The wrong or contaminated brake fluid could result in damage to the brake system. This could result in the loss of braking leading to a possible injury. Always use the proper GM approved brake fluid.

Caution

Object-ID=2869932 LMD=17-Feb-2015

If brake fluid is spilled on the vehicle's painted surfaces, the paint finish can be damaged. Immediately wash off any painted surface.

Battery - North America

Object-ID=4070848 Owner=Dobson, Bert LMD=27-Jan-2015 LMB=Dobson, Bert

The original equipment battery is maintenance free. Do not remove the cap and do not add fluid.

The battery is in the trunk, behind the trim panel, on the driver side of the vehicle. Refer to the replacement number shown on the original battery label when a new battery is needed.

⚠ Warning

Object-ID=2548511 LMD=15-Oct-2015

WARNING: Battery posts, terminals, and related accessories contain lead and lead compounds, chemicals known to the State of California to cause cancer and birth defects or other reproductive harm. Batteries also contain other chemicals known to the State of California to cause cancer. **WASH HANDS AFTER HANDLING.**

See *California Proposition 65 Warning* ⇨ *278*.

After a power loss, such as disconnecting the battery or removing the maxi fuses in the power distribution fuse block, the following steps must be performed to calibrate

the electronic throttle control. If this is not done, the engine will not run properly.

1. Turn the ignition on but do not start the engine.
2. Leave the ignition on for at least three minutes so that the electronic throttle control will cycle and relearn its home position.
3. Turn the ignition off.
4. Start and run the engine for at least 30 seconds.

Vehicle Storage

⚠ Warning

Object-ID=4044919 LMD=09-Dec-2014

Batteries have acid that can burn you and gas that can explode. You can be badly hurt if you are not careful. See *Jump Starting - North America* ⇨ *347* for tips on working around a battery without getting hurt.

Infrequent Usage: Remove the black, negative (-) cable from the battery to keep the battery from running down.

Extended Storage: Remove the black, negative (-) cable from the battery or use a battery trickle charger.

All-Wheel Drive

Object-ID=4165684 Owner=Garcia, Sid
LMD=15-Apr-2015 LMB=Garcia, Sid

If the vehicle is equipped with All-Wheel-Drive (AWD), this is an additional system that needs lubrication.

Transfer Case

When to Check Lubricant

It is not necessary to regularly check the transfer case fluid unless a leak is suspected or an unusual noise is heard. A fluid loss could indicate a problem. Have it inspected and repaired.

How to Check Lubricant

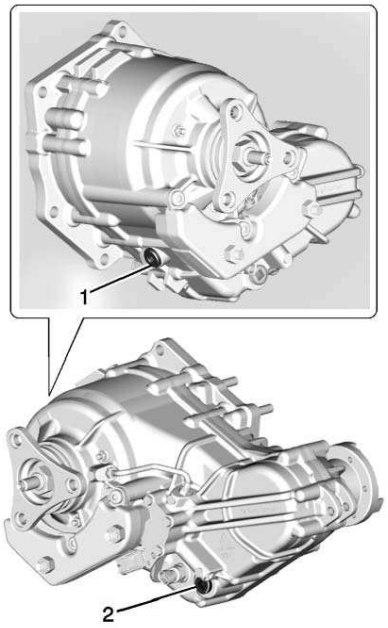

2736540

1. Fill Plug
2. Drain Plug

To get an accurate reading, the vehicle should be on a level surface.

If the level is below the bottom of the fill plug hole, on the transfer case, some lubricant will need to be added. Add enough lubricant to raise the level to the bottom of the fill plug hole. Use care not to overtighten the fill plug.

What to Use

Refer to *Recommended Fluids and Lubricants* ⇨ *372* to determine what kind of lubricant to use.

Starter Switch Check

Object-ID=3218186 Owner=Dobson, Bert
LMD=27-Jun-2014 LMB=Dobson, Bert

⚠ Warning

Object-ID=2210485 LMD=17-Nov-2008

When you are doing this inspection, the vehicle could move suddenly. If the vehicle moves, you or others could be injured.

1. Before starting this check, be sure there is enough room around the vehicle.
2. Firmly apply both the parking brake and the regular brake. Do not use the accelerator pedal, and be ready to turn off the engine immediately if it starts.
3. Try to start the engine in each gear. The vehicle should start only in P (Park) or N (Neutral). If the vehicle starts in any other position, contact your dealer for service.

Automatic Transmission Shift Lock Control Function Check

Object-ID=3218922 Owner=Dobson, Bert
LMD=29-Nov-2012 LMB=Dobson, Bert

⚠ Warning

Object-ID=2210485 LMD=17-Nov-2008

When you are doing this inspection, the vehicle could move suddenly. If the vehicle moves, you or others could be injured.

1. Before starting this check, be sure there is enough room around the vehicle. It should be parked on a level surface.
2. Firmly apply the parking brake. See *Electric Parking Brake* ⇨ *228*.

   Be ready to apply the regular brake immediately if the vehicle begins to move.
3. With the engine off, turn the ignition on, but do not start the engine. Without applying the regular brake, try to move the shift lever out of P (Park) with normal effort. If the shift lever moves out of P (Park), contact your dealer for service.

Park Brake and P (Park) Mechanism Check

Object-ID=2208731 Owner=Dobson, Bert
LMD=14-Jan-2015 LMB=Rocha, Wendy

⚠ Warning

Object-ID=2210488 LMD=17-Nov-2008

When you are doing this check, the vehicle could begin to move. You or others could be injured and property could be damaged. Make sure there is room in front of the vehicle in case it begins to roll. Be ready to apply the regular brake at once should the vehicle begin to move.

Park on a fairly steep hill, with the vehicle facing downhill. Keeping your foot on the regular brake, set the parking brake.

- To check the parking brake's holding ability: With the engine running and the transmission in N (Neutral), slowly remove foot pressure from the regular brake pedal. Do this until the vehicle is held by the parking brake only.
- To check the P (Park) mechanism's holding ability: With the engine running, shift to P (Park). Then release the parking brake followed by the regular brake.

Contact your dealer if service is required.

Headlamp Aiming

Object-ID=2324970 Owner=Cusenza, Mark
LMD=08-Oct-2015 LMB=Clark, Lorien

Headlamp aim has been preset and should need no further adjustment.

If the vehicle is damaged in a crash, the headlamp aim may be affected. If adjustment to the headlamps is necessary, see your dealer.

Bulb Replacement

Object-ID=2169826 Owner=Cusenza, Mark
LMD=13-Jun-2016 LMB=Cusenza, Mark

For the proper type of replacement bulbs, see *Replacement Bulbs* ⇨ *308*.

For any bulb-changing procedure not listed in this section, contact your dealer.

Halogen Bulbs

Object-ID=2169827 Owner=Cusenza, Mark
LMD=13-Jun-2016 LMB=Cusenza, Mark

⚠ Warning

Object-ID=2207969 LMD=10-Nov-2008

Halogen bulbs have pressurized gas inside and can burst if you drop or scratch the bulb. You or others could be injured. Be sure to read and follow the instructions on the bulb package.

High Intensity Discharge (HID) Lighting

Object-ID=2169828 Owner=Cusenza, Mark
LMD=07-Jun-2016 LMB=Cusenza, Mark

⚠ Warning

Object-ID=2209589 LMD=02-Feb-2016

The High Intensity Discharge (HID) lighting system operates at a very high voltage. If you try to service any of the system components, you could be seriously injured. Have your dealer or a qualified technician service them.

After an HID headlamp bulb has been replaced, the beam might be a slightly different shade than it was originally. This is normal.

LED Lighting

Object-ID=2605186 Owner=Cusenza, Mark
LMD=13-Jan-2015 LMB=Rocha, Wendy

This vehicle has several LED lamps. For replacement of any LED lighting assembly, contact your dealer.

Back-Up Lamps

Object-ID=2711943 Owner=Cusenza, Mark
LMD=03-Dec-2014 LMB=Rocha, Wendy

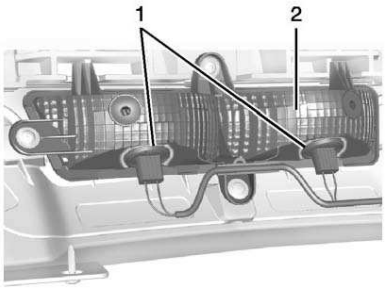

2715542

1. Back-Up Bulb Socket
2. Back-Up Lamp Assembly

To replace one of these bulbs:

1. Reach under the rear fascia and locate the back-up lamp assembly.
2. Remove the bulb socket (1) by turning counterclockwise and pulling straight out of the lamp assembly (2).
3. Pull the bulb out of the socket.

4. Install the new bulb in the bulb socket.
5. Install the bulb socket by turning clockwise.

License Plate Lamp

Object-ID=2899941 Owner=Cusenza, Mark
LMD=22-Oct-2014 LMB=Dobson, Bert

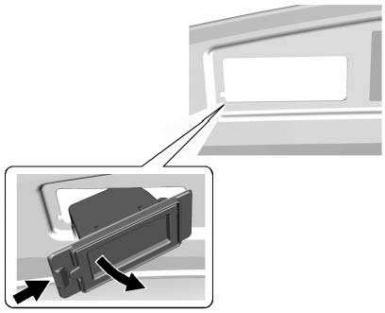

Lamp Assembly

2899874

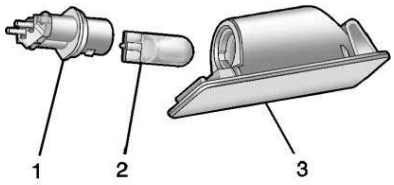

Bulb Assembly

2714211

1. Bulb Socket
2. Bulb
3. Lamp Assembly

To replace one of these bulbs:

1. Push the lamp assembly (3) toward the center of the vehicle.
2. Pull the lamp assembly down to remove.
3. Turn the bulb socket (1) counterclockwise to remove it from the lamp assembly (3).
4. Pull the bulb (2) straight out of the bulb socket (1).
5. Push the replacement bulb straight into the bulb socket and turn the bulb socket clockwise to install it into the lamp assembly.
6. Push the lamp assembly back into position until the release tab locks into place.

Replacement Bulbs

Object-ID=4510211 Owner=Cusenza, Mark
LMD=05-May-2016 LMB=Cusenza, Mark

Exterior Lamp	Bulb Number
Back-Up Lamp	921 (W16W)
License Plate Lamp	W5W LL

For replacement bulbs not listed here, contact your dealer.

Electrical System

Electrical System Overload

Object-ID=3533606 Owner=Byrne, Matthew
LMD=27-Aug-2015 LMB=Byrne, Matthew

The vehicle has fuses and circuit breakers to protect against an electrical system overload.

When the current electrical load is too heavy, the circuit breaker opens and closes, protecting the circuit until the current load returns to normal or the problem is fixed. This greatly reduces the chance of circuit overload and fire caused by electrical problems.

Fuses and circuit breakers protect power devices in the vehicle.

Replace a bad fuse with a new one of the identical size and rating.

If there is a problem on the road and a fuse needs to be replaced, the same amperage fuse can be borrowed. Choose some feature of the vehicle that is not needed to use and replace it as soon as possible.

Headlamp Wiring

An electrical overload may cause the lamps to go on and off, or in some cases to remain off. Have the headlamp wiring checked right away if the lamps go on and off or remain off.

Windshield Wipers

If the wiper motor overheats due to heavy snow or ice, the windshield wipers will stop. Wiper function is available immediately after the wiper switch is set to off, and back to on.

To protect the wiper motor from overheating, the wipers may slow down when the windshield is dry for a long period of time. If a period of dry operation, or little moisture, exceeds 10 minutes, the wipers may switch to intermittent operation, and remain there. When moisture is again detected on the windshield, wiper operation will return to the operator selected speed.

Although the circuit is protected from electrical overload, overload due to heavy snow or ice may cause wiper linkage damage. Always clear ice and heavy snow from the windshield before using the windshield wipers.

If the overload is caused by an electrical problem and not snow or ice, be sure to get it fixed.

Fuses and Circuit Breakers

Object-ID=2172054 Owner=Byrne, Matthew
LMD=27-Aug-2015 LMB=Byrne, Matthew

The wiring circuits in the vehicle are protected from short circuits by a combination of fuses and circuit breakers. This greatly reduces the chance of damage caused by electrical problems.

To check a fuse, look at the silver-colored band inside the fuse. If the band is broken or melted, replace the fuse. Be sure to replace a bad fuse with a new one of the identical size and rating.

Fuses of the same amperage can be temporarily borrowed from another fuse location, if a fuse goes out. Replace the fuse as soon as possible.

To identify and check fuses, circuit breakers, and relays, see *Engine Compartment Fuse Block* ⇨ *310*, *Instrument Panel Fuse Block* ⇨ *313*, and *Rear Compartment Fuse Block* ⇨ *315*.

Engine Compartment Fuse Block

Object-ID=4444915 Owner=Byrne, Matthew LMD=03-Mar-2016 LMB=Byrne, Matthew

The underhood fuse block is on the passenger side of the engine compartment.

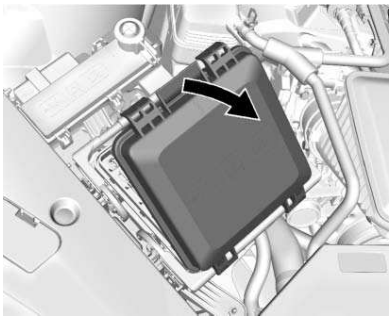

2715953

Lift the fuse block cover to access the fuses.

The vehicle may not be equipped with all of the fuses and relays shown.

Caution

Object-ID=2867407 LMD=05-Jun-2012

Spilling liquid on any electrical component on the vehicle may damage it. Always keep the covers on any electrical component.

4245521

Fuses	Usage
1	–
2	–
*3	Passenger motorized safety belt
4	–
5	–
6	Driver power seat
7	–
9	–
10	–
11	–
12	–
13	Passenger power seat
14	–
15	Passive entry/Passive start/Front wipers
16	–
*17	Headlamp washers
18	–
19	ABS pump
20	ABS valve
*21	–

Fuses	Usage
22	Driver motorized safety belt
*26	–
27	–/Heated seat 2
28	–/Reverse lock out
*29	AFS AHL/Pedestrian protection
30	–
31	Passenger window switch
32	–
33	Sunroof
34	Front wiper
35	Steering column lock
36	RBEC/Ignition
37	–/MIL/Ignition
38	Aeroshutter
39	O2 sensor/Emissions
40	Ignition coil/Injectors
41	–/Ignition coil/ Injectors

Fuses	Usage
*42	Engine control module
43	–
44	–
45	Washer
48	Instrument panel/ Body/Ignition
49	FSCM/Ignition
*50	Heated steering wheel
*51	Engine control module/Ignition
*52	TCM/Ignition
53	Coolant pump
55	–
*56	TCM/–
*64	Automatic headlamp leveling
*65	Left HID headlamp
66	Right HID headlamp
67	High-beam headlamps

Fuses	Usage
68	Headlamp leveling motor
69	Horn
71	Coolant fan
72	Starter 2
*73	Brake vacuum pump
74	Starter
75	A/C clutch
76	–

Relays	Usage
*8	Headlamp washer
23	Wiper control relay
24	Wiper speed
25	Engine control module
46	Rear washer
47	Front washer
*54	Coolant pump
57	Low-beam headlamp
58	High-beam headlamp

Cadillac CTS/CTS-V Owner Manual (GMNA-Localizing-U.S./Canada-2ndPrint-11254870) - 2017 - Final Review - 6/14/16

Relays	Usage
59	Run/Crank
60	Starter 2
*61	Vacuum pump
62	Starter
*63	A/C control
70	Horn

* Optional

Instrument Panel Fuse Block

Object-ID=4439136 Owner=Byrne, Matthew
LMD=03-Mar-2016 LMB=Byrne, Matthew

The instrument panel fuse block is in the end of the driver side of the instrument panel.

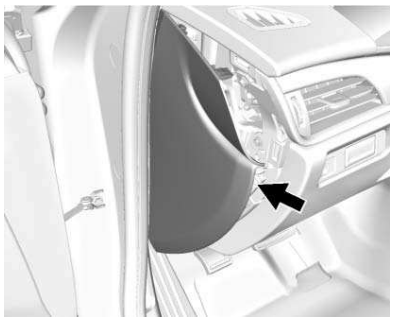

2856441

To access the fuses, remove the end panel by gently prying with a plastic tool near each clip, beginning at the point shown.

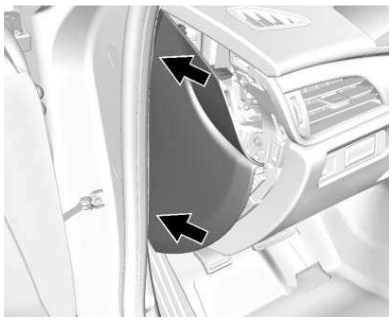

2856457

To install the end cover, insert the tabs on the back of the cover into the slots in the instrument panel at the points shown. Align the clips with the slots in the instrument panel, and press the cover into place.

The vehicle may not be equipped with all of the fuses and relays shown.

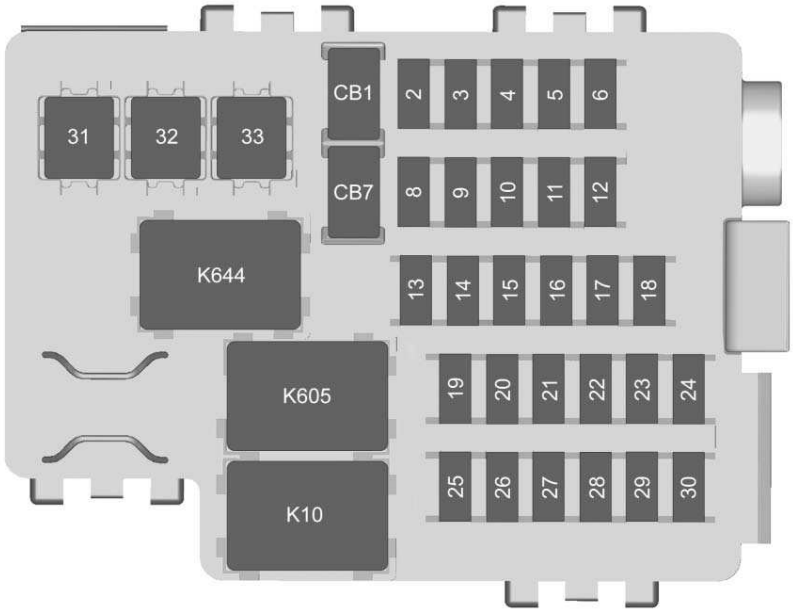

4437635

Fuses	Usage
2	Motorized cupholder
3	Electric steering column lock
4	–
5	HVAC control
6	Tilt/Telescoping steering column
8	Data link connector
9	Glove box release
10	Shunt
11	Body control module 1
12	Body control module 5
13	Body control module 6
14	–
15	Body control module 7
16	Transmission control module
17	–
18	–
19	Auxiliary power outlet

Cadillac CTS/CTS-V Owner Manual (GMNA-Localizing-U.S./Canada-2ndPrint-11254870) - 2017 - Final Review - 6/14/16

Fuses	Usage
20	Lighter
21	Wireless charger
22	Sensing diagnostic module/ Automatic occupant sensing
23	Radio/DVD/HVAC control
24	Display
25	Heated steering wheel
26	Wireless charger
27	Steering wheel switches
28	–
29	Visor
30	–
31	–
32	Retained accessory power
33	Front HVAC blower
CB1	Accessory power outlet
CB7	–
K10	Retained accessory power
K605	Logistics
K644	Retained accessory power/Glove box release

Rear Compartment Fuse Block

Object-ID=4439159 Owner=Byrne, Matthew
LMD=03-Mar-2016 LMB=Byrne, Matthew

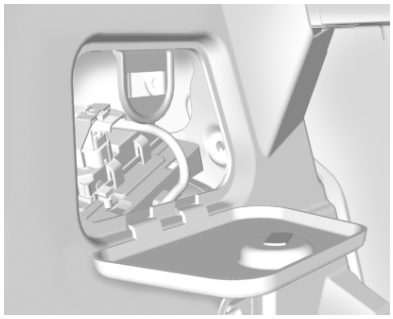

2715940

The rear compartment fuse block is behind a cover on the driver side of the rear compartment.

The vehicle may not be equipped with all of the fuses, relays, and features shown.

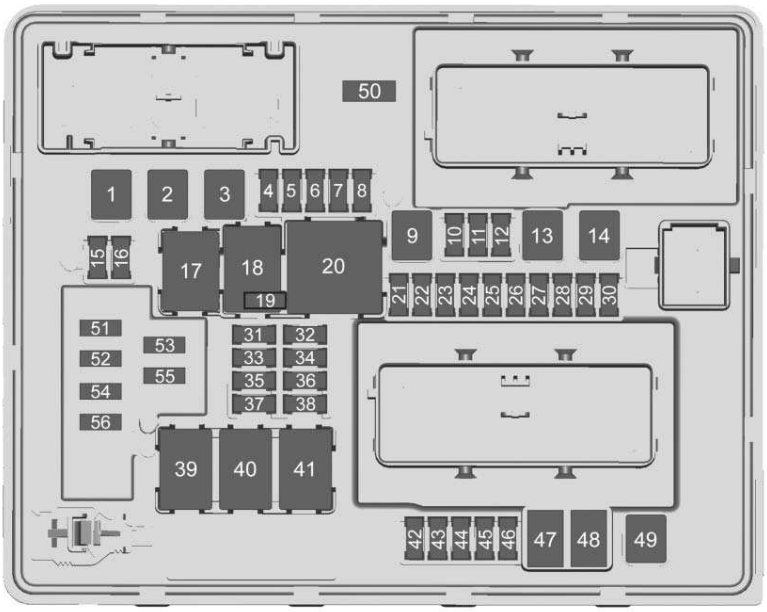

4436627

Fuses	Usage
*1	Rear driver control module/DC DC transformer
2	Left window
3	Body control module 8
*4	A/C inverter
5	Passive entry/Passive start/Battery 1
6	Body control module 4
7	Heated mirror
8	Amplifier
9	Rear defogger
10	Glass break
*11	Trailer connector
12	OnStar (if equipped)
13	Right window
14	Electric parking brake
15	–
16	Trunk release

Fuses	Usage
*17	RUN relay
*18	Logistics relay
*19	–
20	Rear window defogger relay
21	Mirror window module
22	–
23	Canister vent
24	Body control module 2
*25	Rear vision camera
*26	Front ventilated seats
*27	SBZA/LDW/EOCM
*28	Trailer/Sunshade
*29	Rear heated seats
*30	Semi-active damping system
*31	Traction control module/Rear control drive module
32	Theft deterrent module/Universal garage door opener/ Rain sensor
*33	UPA
*34	Radio/DVD
35	Exhaust valve
*36	Trailer
37	Fuel pump/Fuel system control module
38	Fuel pump
39	–
40	Exhaust valve
41	Run/Crank 2
*42	Memory seat module
43	Body control module 3
44	–
45	Battery regulated voltage control
46	Engine control module/Battery
47	–
48	–
*49	Trailer module
50	Door lock security
51	Rear closure release
52	Rear closure
53	–
54	Door lock security
55	–
*56	Fuel door

* Optional

Wheels and Tires

Tires

Object-ID=2374661 Owner=Rosekrans, Dee LMD=14-Jan-2015 LMB=Rocha, Wendy

Every new GM vehicle has high-quality tires made by a leading tire manufacturer. See the warranty manual for information regarding the tire warranty and where to get service. For additional information refer to the tire manufacturer.

⚠ Warning

Object-ID=2374639 LMD=18-Oct-2012

- Poorly maintained and improperly used tires are dangerous.
- Overloading the tires can cause overheating as a result of too much flexing. There could be a blowout and a serious crash. See *Vehicle Load Limits* ⇨ *211*.

(Continued)

Warning (Continued)

Object-ID=2374639 LMD=18-Oct-2012

- Underinflated tires pose the same danger as overloaded tires. The resulting crash could cause serious injury. Check all tires frequently to maintain the recommended pressure. Tire pressure should be checked when the tires are cold.
- Overinflated tires are more likely to be cut, punctured, or broken by a sudden impact — such as when hitting a pothole. Keep tires at the recommended pressure.
- Worn or old tires can cause a crash. If the tread is badly worn, replace them.

(Continued)

Warning (Continued)

Object-ID=2374639 LMD=18-Oct-2012

- Replace any tires that have been damaged by impacts with potholes, curbs, etc.
- Improperly repaired tires can cause a crash. Only the dealer or an authorized tire service center should repair, replace, dismount, and mount the tires.
- Do not spin the tires in excess of 56 km/h (35 mph) on slippery surfaces such as snow, mud, ice, etc. Excessive spinning may cause the tires to explode.

See *Tire Pressure for High-Speed Operation* ⇨ *327* for inflation pressure adjustment for high-speed driving.

All-Season Tires

Object-ID=2629342 Owner=Rosekrans, Dee LMD=14-Jan-2015 LMB=Rocha, Wendy

This vehicle may come with all-season tires. These tires are designed to provide good overall performance on most road surfaces and weather conditions. Original equipment tires designed to GM's specific tire performance criteria have a TPC specification code molded onto the sidewall. Original equipment all-season tires can be identified by the last two characters of this TPC code, which will be “MS.”

Consider installing winter tires on the vehicle if frequent driving on snow or ice-covered roads is expected. All-season tires provide adequate performance for most winter driving conditions, but they may not offer the same level of traction or performance as winter tires on snow or ice-covered roads. See *Winter Tires* ⇨ *319*.

Winter Tires

Object-ID=2676863 Owner=Rosekrans, Dee LMD=14-Jan-2015 LMB=Rocha, Wendy

This vehicle was not originally equipped with winter tires. Winter tires are designed for increased traction on snow and ice-covered roads. Consider installing winter tires on the vehicle if frequent driving on ice or snow covered roads is expected. See your dealer for details regarding winter tire availability and proper tire selection. Also, see *Buying New Tires* ⇨ *334*.

With winter tires, there may be decreased dry road traction, increased road noise, and shorter tread life. After changing to winter tires, be alert for changes in vehicle handling and braking.

If using winter tires:

- Use tires of the same brand and tread type on all four wheel positions.
- Use only radial ply tires of the same size, load range, and speed rating as the original equipment tires.

Winter tires with the same speed rating as the original equipment tires may not be available for H, V, W, Y, and ZR speed rated tires. If winter tires with a lower speed rating are chosen, never exceed the tire's maximum speed capability.

Run-Flat Tires

Object-ID=2869365 Owner=Rosekrans, Dee LMD=14-Jan-2015 LMB=Rocha, Wendy

This vehicle, when new, may have had run-flat tires. There is no spare tire, no tire changing equipment, and no place to store a tire in the vehicle.

The vehicle also has a Tire Pressure Monitor System (TPMS) that indicates a loss of tire pressure in any of the tires.

⚠ Warning

Object-ID=2208907 LMD=08-Mar-2012

If the low tire warning light displays on the instrument cluster, the handling capabilities will be reduced during severe maneuvers. Driving too fast could cause loss of

(Continued)

Warning (Continued)

Object-ID=2208907 LMD=08-Mar-2012

control and you or others could be injured. Do not drive over 90 km/h (55 mph) when the low tire warning light is displayed. Drive cautiously and check the tire pressures as soon as possible.

Run-flat tires can be driven on with no air pressure. There is no need to stop on the side of the road to change the tire. Continue driving; however, do not drive too far or too fast. Driving on the tire may not be possible if there is permanent damage. To prevent permanent damage, keep speed below 80 km/h (50 mph). With a light load the vehicle can be driven up to 100 km (60 mi); with a moderate load 80 km (50 mi); and a heavy load 45 km (25 mi). As soon as possible, contact the nearest authorized GM or run-flat servicing facility for inspection and repair or replacement.

When driving on a deflated run-flat tire, avoid potholes and other road hazards that could damage the tire and/or wheel beyond repair. When a tire has been damaged, or driven any distance while deflated, check with an authorized run-flat tire service center to determine whether the tire can be repaired or should be replaced. To maintain the run-flat feature, all replacement tires must be run-flat tires.

To locate the nearest GM or run-flat servicing facility, call Customer Assistance.

The valve stems on run-flat tires have sensors that are part of the TPMS. See *Tire Pressure Monitor System* ⇨ *327*. These sensors contain batteries that are designed to last for 10 years under normal driving conditions. See your dealer for wheel or sensor replacement.

Caution

Object-ID=2857711 LMD=17-May-2012

Using liquid sealants can damage the tire valves and tire pressure monitor sensors in the run-flat tires. This damage is not covered by the vehicle warranty. Do not use liquid sealants in run-flat tires.

Low-Profile Tires

Object-ID=4098197 Owner=Rosekrans, Dee
LMD=04-Mar-2015 LMB=Rosekrans, Dee

If the vehicle has 255/35R19, 265/35ZR19, or 295/30ZR19 size tires, they are classified as low-profile tires.

Caution

Object-ID=2857719 LMD=30-May-2013

Low-profile tires are more susceptible to damage from road hazards or curb impact than standard profile tires. Tire and/or wheel assembly damage can occur

(Continued)

Caution (Continued)

Object-ID=2857719 LMD=30-May-2013

when coming into contact with road hazards like potholes, or sharp edged objects, or when sliding into a curb. The warranty does not cover this type of damage. Keep tires set to the correct inflation pressure and when possible, avoid contact with curbs, potholes, and other road hazards.

Summer Tires

Object-ID=4500081 Owner=Rosekrans, Dee
LMD=20-Apr-2016 LMB=Rosekrans, Dee

High Performance Summer Tires

This vehicle may come with 245/40R18 (front) and 275/35R18 (rear) or 265/35ZR19 (front) and 295/30ZR19 (rear) high performance summer tires. These tires have a special tread and compound that are optimized for maximum dry and wet road performance. This special tread and compound will have decreased performance in cold climates, and on ice and snow. It is recommended that winter tires be installed on the vehicle if frequent driving at temperatures below approximately 5 °C (40 °F) or on ice or snow covered roads is expected. See *Winter Tires* ⇨ *319*.

Caution

Object-ID=3712385 LMD=29-Jan-2015

High performance summer tires have rubber compounds that lose flexibility and may develop surface cracks in the tread area at temperatures below –7 °C (20 °F). Always store high performance summer tires indoors and at temperatures above –7 °C (20 °F) when not in use. If the tires have been subjected to –7 °C (20 °F) or less, let them warm up in a heated space to at least 5 °C (40 °F) for 24 hours or more before being installed or driving a vehicle on which they are installed. Do not apply heat or blow heated air directly on the tires. Always inspect tires before use. See *Tire Inspection* ⇨ *331*.

Tire Sidewall Labeling

Object-ID=2677833 Owner=Rosekrans, Dee
LMD=12-Jan-2015 LMB=Rocha, Wendy

Useful information about a tire is molded into its sidewall. The examples show a typical passenger tire sidewall.

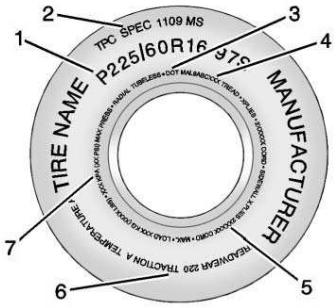

Passenger (P-Metric) Tire Example

2713868

(1) Tire Size : The tire size is a combination of letters and numbers used to define a particular tire's width, height, aspect ratio, construction type,

and service description. See the "Tire Size" illustration later in this section for more detail.

(2) TPC Spec (Tire Performance Criteria Specification) : Original equipment tires designed to GM's specific tire performance criteria have a TPC specification code molded onto the sidewall. GM's TPC specifications meet or exceed all federal safety guidelines.

(3) DOT (Department of Transportation) : The Department of Transportation (DOT) code indicates that the tire is in compliance with the U.S. Department of Transportation Motor Vehicle Safety Standards.

DOT Tire Date of Manufacture : The last four digits of the TIN indicate the tire manufactured date. The first two digits represent the week (01-52) and the last two digits, the year. For example, the third week of the year 2010 would have a four-digit DOT date of 0310.

(4) Tire Identification Number (TIN) : The letters and numbers following the DOT code are the Tire Identification Number (TIN). The TIN shows the manufacturer and plant code, tire size, and date the tire was manufactured. The TIN is molded onto both sides of the tire, although only one side may have the date of manufacture.

(5) Tire Ply Material : The type of cord and number of plies in the sidewall and under the tread.

(6) Uniform Tire Quality Grading (UTQG) : Tire manufacturers are required to grade tires based on three performance factors: treadwear, traction, and temperature resistance. For more information see *Uniform Tire Quality Grading ⇨ 335*.

(7) Maximum Cold Inflation Load Limit : Maximum load that can be carried and the maximum pressure needed to support that load.

Tire Designations

Object-ID=2716348 Owner=Rosekrans, Dee
LMD=14-Jan-2015 LMB=Rocha, Wendy

Tire Size

The following is an example of a typical passenger vehicle tire size.

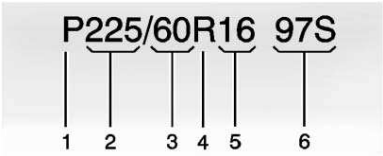

2713870

(1) Passenger (P-Metric) Tire : The United States version of a metric tire sizing system. The letter P as the first character in the tire size means a passenger

vehicle tire engineered to standards set by the U.S. Tire and Rim Association.

(2) Tire Width : The three-digit number indicates the tire section width in millimeters from sidewall to sidewall.

(3) Aspect Ratio : A two-digit number that indicates the tire height-to-width measurements. For example, if the tire size aspect ratio is 60, as shown in item 3 of the illustration, it would mean that the tire's sidewall is 60 percent as high as it is wide.

(4) Construction Code : A letter code is used to indicate the type of ply construction in the tire. The letter R means radial ply construction; the letter D means diagonal or bias ply construction; and the letter B means belted-bias ply construction.

(5) Rim Diameter : Diameter of the wheel in inches.

(6) Service Description : These characters represent the load index and speed rating of the tire. The load index represents the load carrying capacity a tire is certified to carry. The speed rating is the maximum speed a tire is certified to carry a load.

Tire Terminology and Definitions

Object-ID=2921157 Owner=Rosekrans, Dee LMD=14-Jan-2015 LMB=Rocha, Wendy

Air Pressure : The amount of air inside the tire pressing outward on each square inch of the tire. Air pressure is expressed in kPa (kilopascal) or psi (pounds per square inch).

Accessory Weight : The combined weight of optional accessories. Some examples of optional accessories are automatic transmission, power windows, power seats, and air conditioning.

Aspect Ratio : The relationship of a tire's height to its width.

Belt : A rubber coated layer of cords between the plies and the tread. Cords may be made from steel or other reinforcing materials.

Bead : The tire bead contains steel wires wrapped by steel cords that hold the tire onto the rim.

Bias Ply Tire : A pneumatic tire in which the plies are laid at alternate angles less than 90 degrees to the centerline of the tread.

Cold Tire Pressure : The amount of air pressure in a tire, measured in kPa (kilopascal) or psi (pounds per square inch) before a tire has built up heat from driving. See *Tire Pressure* ⇨ *325*.

Curb Weight : The weight of a motor vehicle with standard and optional equipment including the maximum capacity of fuel, oil, and coolant, but without passengers and cargo.

DOT Markings : A code molded into the sidewall of a tire signifying that the tire is in compliance with the U.S. Department of Transportation (DOT) Motor Vehicle Safety Standards. The DOT code includes the Tire Identification Number (TIN), an alphanumeric designator which can also identify the tire manufacturer, production plant, brand, and date of production.

GVWR : Gross Vehicle Weight Rating. See *Vehicle Load Limits* ⇨ *211*.

GAWR FRT : Gross Axle Weight Rating for the front axle. See *Vehicle Load Limits* ⇨ *211*.

GAWR RR : Gross Axle Weight Rating for the rear axle. See *Vehicle Load Limits* ⇨ *211*.

Intended Outboard Sidewall : The side of an asymmetrical tire that must always face outward when mounted on a vehicle.

Kilopascal (kPa) : The metric unit for air pressure.

Light Truck (LT-Metric) Tire : A tire used on light duty trucks and some multipurpose passenger vehicles.

Load Index : An assigned number ranging from 1 to 279 that corresponds to the load carrying capacity of a tire.

Maximum Inflation Pressure : The maximum air pressure to which a cold tire can be inflated. The maximum air pressure is molded onto the sidewall.

Maximum Load Rating : The load rating for a tire at the maximum permissible inflation pressure for that tire.

Maximum Loaded Vehicle Weight : The sum of curb weight, accessory weight, vehicle capacity weight, and production options weight.

Normal Occupant Weight : The number of occupants a vehicle is designed to seat multiplied by 68 kg (150 lb). See *Vehicle Load Limits* ⇨ *211*.

Occupant Distribution : Designated seating positions.

Outward Facing Sidewall : The side of an asymmetrical tire that has a particular side that faces outward when mounted on a vehicle. The side of the tire that contains a whitewall, bears white lettering, or bears manufacturer, brand, and/or model name molding that is higher or deeper than the same moldings on the other sidewall of the tire.

Passenger (P-Metric) Tire : A tire used on passenger cars and some light duty trucks and multipurpose vehicles.

Recommended Inflation Pressure : Vehicle manufacturer's recommended tire inflation

pressure as shown on the tire placard. See *Tire Pressure* ⇨ *325* and *Vehicle Load Limits* ⇨ *211*.

Radial Ply Tire : A pneumatic tire in which the ply cords that extend to the beads are laid at 90 degrees to the centerline of the tread.

Rim : A metal support for a tire and upon which the tire beads are seated.

Sidewall : The portion of a tire between the tread and the bead.

Speed Rating : An alphanumeric code assigned to a tire indicating the maximum speed at which a tire can operate.

Traction : The friction between the tire and the road surface. The amount of grip provided.

Tread : The portion of a tire that comes into contact with the road.

Treadwear Indicators : Narrow bands, sometimes called wear bars, that show across the tread of a tire when only 1.6 mm (1/16 in) of tread remains. See *When It Is Time for New Tires* ⇨ *333*.

UTQGS (Uniform Tire Quality Grading Standards) : A tire information system that provides consumers with ratings for a tire's traction, temperature, and treadwear. Ratings are determined by tire manufacturers using government testing procedures. The ratings are molded into the sidewall of the tire. See *Uniform Tire Quality Grading* ⇨ *335*.

Vehicle Capacity Weight : The number of designated seating positions multiplied by 68 kg (150 lb) plus the rated cargo load. See *Vehicle Load Limits* ⇨ *211*.

Vehicle Maximum Load on the Tire : Load on an individual tire due to curb weight, accessory weight, occupant weight, and cargo weight.

Vehicle Placard : A label permanently attached to a vehicle showing the vehicle capacity weight and the original equipment tire size and recommended inflation pressure. See “Tire and Loading Information Label” under *Vehicle Load Limits* ⇨ *211*.

Tire Pressure

Object-ID=2827496 Owner=Rosekrans, Dee LMD=06-Feb-2015 LMB=Rosekrans, Dee

Tires need the correct amount of air pressure to operate effectively.

Caution

Object-ID=2826662 LMD=06-Jun-2016

Neither tire underinflation nor overinflation is good. Underinflated tires, or tires that do not have enough air, can result in:

- Tire overloading and overheating which could lead to a blowout.

(Continued)

Caution (Continued)

Object-ID=2826662 LMD=06-Jun-2016

- Premature or irregular wear.
- Poor handling.
- Reduced fuel economy.

Overinflated tires, or tires that have too much air, can result in:

- Unusual wear.
- Poor handling.
- Rough ride.
- Needless damage from road hazards.

The Tire and Loading Information label on the vehicle indicates the original equipment tires and the correct cold tire inflation pressures. The recommended pressure is the minimum air pressure needed to support the vehicle's maximum load carrying capacity. See *Vehicle Load Limits* ➪ *211*.

How the vehicle is loaded affects vehicle handling and ride comfort. Never load the vehicle with more weight than it was designed to carry.

When to Check

Check the tires once a month or more.

How to Check

Use a good quality pocket-type gauge to check the tire pressure. Proper tire inflation cannot be determined by looking at the tire. Check the tire inflation pressure when the tires are cold, meaning the vehicle has not been driven for at least three hours or no more than 1.6 km (1 mi).

Remove the valve cap from the tire valve stem. Press the tire gauge firmly onto the valve to get the pressure measurement. If the cold tire inflation pressure matches the recommended pressure on the Tire and Loading Information label, no further adjustment is necessary.

If the inflation pressure is low, add air until the recommended pressure is reached. If the inflation pressure in high, press on the metal stem in the center of the tire valve to release air. Re-check the tire pressure with the tire gauge.

Put the valve caps back on the valve stems to keep out dirt and moisture and prevent leaks. Use only valve caps designed for the vehicle by GM. TPMS sensors could be damaged and would not be covered by the vehicle warranty.

Tire Pressure for High-Speed Operation

Object-ID=4098620 Owner=Rosekrans, Dee LMD=07-Apr-2015 LMB=Rosekrans, Dee

⚠ Warning

Object-ID=2209251 LMD=07-Apr-2015

Driving at high speeds, 160 km/h (100 mph) or higher, puts additional strain on tires. Sustained high-speed driving causes excessive heat buildup and can cause sudden tire failure. This could cause a crash, and you or others could be killed. Some high-speed rated tires require inflation pressure adjustment for high-speed operation. When speed limits and road conditions allow the vehicle to be driven at high speeds, make sure the tires are rated for high-speed operation, are in excellent condition, and are set to the correct cold tire inflation pressure for the vehicle load.

Vehicles with P245/45R17 95V, P245/40R18 93V, or 255/35R19 96V size tires require inflation pressure adjustment when driving the vehicle at speeds of 160 km/h (100 mph) or higher. Set the cold tire inflation pressure to 280 kPa (41 psi).

Vehicles with 245/40R18 93Y and 275/35R18 95Y or 265/35ZR19 (94Y) and 295/30ZR19 (100Y) size tires require inflation pressure adjustment when driving the vehicle at speeds of 160 km/h (100 mph) or higher. Set the cold tire inflation pressure to 300 kPa (44 psi).

Sustained operation at speeds over 160 km/h (100 mph) requires a load limit of the driver and one passenger, with no additional cargo. When loaded above this level, up to the GVW, do not operate the vehicle above 160 km/h (100 mph).

Return the tires to the recommended cold tire inflation pressure when high-speed driving has ended. See *Vehicle Load Limits* ⇨ *211* and *Tire Pressure* ⇨ *325*.

Tire Pressure Monitor System

Object-ID=3587187 Owner=Rosekrans, Dee LMD=14-Jan-2015 LMB=Rocha, Wendy

The Tire Pressure Monitor System (TPMS) uses radio and sensor technology to check tire pressure levels. The TPMS sensors monitor the air pressure in your tires and transmit tire pressure readings to a receiver located in the vehicle.

Each tire, including the spare (if provided), should be checked monthly when cold and inflated to the inflation pressure recommended by the vehicle manufacturer on the vehicle placard or tire inflation pressure label. (If your vehicle has tires of a different size than the size indicated on the vehicle placard or tire inflation pressure label, you should determine the proper tire inflation pressure for those tires.)

As an added safety feature, your vehicle has been equipped with a tire pressure monitoring system (TPMS) that illuminates a low tire pressure telltale when one or more of your tires is significantly under-inflated.

Accordingly, when the low tire pressure telltale illuminates, you should stop and check your tires as soon as possible, and inflate them to the proper pressure. Driving on a significantly under-inflated tire causes the tire to overheat and can lead to tire failure. Under-inflation also reduces fuel efficiency and tire tread life, and may affect the vehicle's handling and stopping ability.

Please note that the TPMS is not a substitute for proper tire maintenance, and it is the driver's responsibility to maintain correct tire pressure, even if under-inflation has not reached the level to trigger illumination of the TPMS low tire pressure telltale.

Your vehicle has also been equipped with a TPMS malfunction indicator to indicate when the system is not operating properly. The TPMS malfunction indicator is combined with the low tire pressure telltale. When the system detects a malfunction, the telltale will flash for approximately one minute and then remain continuously illuminated. This sequence will continue upon subsequent vehicle start-ups as long as the malfunction exists.

When the malfunction indicator is illuminated, the system may not be able to detect or signal low tire pressure as intended. TPMS malfunctions may occur for a variety of reasons, including the installation of replacement or alternate tires or wheels on the vehicle that prevent the TPMS from functioning properly. Always check the TPMS malfunction telltale after replacing one or more tires or wheels on your vehicle to ensure that the replacement or alternate tires and wheels allow the TPMS to continue to function properly.

See *Tire Pressure Monitor Operation* ⇨ *328*.

See *Radio Frequency Statement (US/CAN)* ⇨ *397* or *Radio Frequency Statement (MEXICO1)* ⇨ *397* or *Radio Frequency Statement (MEXICO)* ⇨ *397*.

Tire Pressure Monitor Operation

Object-ID=3657161 Owner=Rosekrans, Dee
LMD=29-Jul-2015 LMB=Rosekrans, Dee

This vehicle may have a Tire Pressure Monitor System (TPMS). The TPMS is designed to warn the driver when a low tire pressure condition exists. TPMS sensors are mounted onto each tire and wheel assembly, excluding the spare tire and wheel assembly. The TPMS sensors monitor the air pressure in the tires and transmits the tire pressure readings to a receiver located in the vehicle.

1970731

When a low tire pressure condition is detected, the TPMS illuminates the low tire pressure warning light on the instrument cluster. If the warning light comes on, stop as soon as possible and inflate the tires to the

recommended pressure shown on the Tire and Loading Information label. See *Vehicle Load Limits* ➪ *211*.

A message to check the pressure in a specific tire displays in the Driver Information Center (DIC). The low tire pressure warning light and the DIC warning message come on at each ignition cycle until the tires are inflated to the correct inflation pressure. Using the DIC, tire pressure levels can be viewed. For additional information and details about the DIC operation and displays see *Driver Information Center (DIC)* ➪ *140*.

The low tire pressure warning light may come on in cool weather when the vehicle is first started, and then turn off as the vehicle is driven. This could be an early indicator that the air pressure is getting low and needs to be inflated to the proper pressure.

A Tire and Loading Information label, attached to your vehicle, shows the size of the original equipment tires and the correct inflation pressure for the tires when they are cold. See *Vehicle Load Limits* ➪ *211*, for an example of the Tire and Loading Information label and its location. Also see *Tire Pressure* ➪ *325*.

The TPMS can warn about a low tire pressure condition but it does not replace normal tire maintenance. See *Tire Inspection* ➪ *331*, *Tire Rotation* ➪ *331* and *Tires* ➪ *318*.

Caution

Object-ID=2813414 LMD=28-Feb-2013

Tire sealant materials are not all the same. A non-approved tire sealant could damage the TPMS sensors. TPMS sensor damage caused by using an incorrect tire sealant is not covered by the vehicle warranty. Always use only the GM approved tire sealant available through your dealer or included in the vehicle.

Factory-installed Tire Inflator Kits use a GM approved liquid tire sealant. Using non-approved tire sealants could damage the TPMS sensors. See *Tire Sealant and Compressor Kit* ➪ *340* for information regarding the inflator kit materials and instructions.

TPMS Malfunction Light and Message

The TPMS will not function properly if one or more of the TPMS sensors are missing or inoperable. When the system detects a malfunction, the low tire warning light flashes for about one minute and then stays on for the remainder of the ignition cycle. A DIC warning message also displays. The malfunction light and DIC warning message come on at each ignition cycle until the problem is corrected. Some of the conditions that can cause these to come on are:

- One of the road tires has been replaced with the spare tire. The spare tire does not have a TPMS sensor. The malfunction light and DIC message should go off after the road tire is replaced and the sensor matching process is performed successfully. See “TPMS Sensor Matching Process” later in this section.

- The TPMS sensor matching process was not done or not completed successfully after rotating the tires. The malfunction light and the DIC message should go off after successfully completing the sensor matching process. See "TPMS Sensor Matching Process" later in this section.
- One or more TPMS sensors are missing or damaged. The malfunction light and the DIC message should go off when the TPMS sensors are installed and the sensor matching process is performed successfully. See your dealer for service.
- Replacement tires or wheels do not match the original equipment tires or wheels. Tires and wheels other than those recommended could prevent the TPMS from functioning properly. See *Buying New Tires* ⇨ *334*.
- Operating electronic devices or being near facilities using radio wave frequencies similar to the TPMS could cause the TPMS sensors to malfunction.

If the TPMS is not functioning properly it cannot detect or signal a low tire condition. See your dealer for service if the TPMS malfunction light and DIC message comes on and stays on.

TPMS Sensor Matching Process

Each TPMS sensor has a unique identification code. The identification code needs to be matched to a new tire/wheel position after rotating the vehicle's tires or replacing one or more of the TPMS sensors. The TPMS sensor matching process should also be performed after replacing a spare tire with a road tire containing the TPMS sensor. The malfunction light and the DIC message should go off at the next ignition cycle. The sensors are matched to the tire/wheel positions, using a TPMS relearn tool, in the following order: driver side front tire, passenger side front tire, passenger side rear tire, and driver side rear. See your dealer for service or to purchase a relearn tool. A TPMS relearn tool can also be purchased. See Tire Pressure Monitor Sensor Activation Tool at www.gmtoolsandequipment.com or call 1-800-GM TOOLS (1-800-468-6657).

There are two minutes to match the first tire/wheel position, and five minutes overall to match all four tire/wheel positions. If it takes longer, the matching process stops and must be restarted.

The TPMS sensor matching process is:

1. Set the parking brake.
2. Place the vehicle power mode in ON/RUN/START. See *Ignition Positions* ⇨ *216*.
3. Make sure the Tire Pressure info display option is turned on. The info displays on the DIC can be turned on and off through the Settings menu. See *Driver Information Center (DIC)* ⇨ *140*.
4. Use the five-way DIC control on the right side of the steering wheel to scroll to the Tire

Pressure screen under the DIC info page. See *Driver Information Center (DIC)* ⇨ *140*.

5. Press and hold SEL in the center of the five-way DIC control.

   The horn sounds twice to signal the receiver is in relearn mode and the TIRE LEARNING ACTIVE message displays on the DIC screen.

6. Start with the driver side front tire.
7. Place the relearn tool against the tire sidewall, near the valve stem. Then press the button to activate the TPMS sensor. A horn chirp confirms that the sensor identification code has been matched to this tire and wheel position.
8. Proceed to the passenger side front tire, and repeat Step 7.
9. Proceed to the passenger side rear tire, and repeat Step 7.
10. Proceed to the driver side rear tire, and repeat Step 7. The horn sounds two times to indicate the sensor identification code has been matched to the driver side rear tire, and the TPMS sensor matching process is no longer active. The TIRE LEARNING ACTIVE message on the DIC display screen goes off.
11. Shut the ignition off.
12. Set all four tires to the recommended air pressure level as indicated on the Tire and Loading Information label.

Tire Inspection

Object-ID=2374690 Owner=Rosekrans, Dee LMD=14-Jan-2015 LMB=Rocha, Wendy

We recommend that the tires, including the spare tire, if the vehicle has one, be inspected for signs of wear or damage at least once a month.

Replace the tire if:

- The indicators at three or more places around the tire can be seen.
- There is cord or fabric showing through the tire's rubber.
- The tread or sidewall is cracked, cut, or snagged deep enough to show cord or fabric.
- The tire has a bump, bulge, or split.
- The tire has a puncture, cut, or other damage that cannot be repaired well because of the size or location of the damage.

Tire Rotation

Object-ID=2551888 Owner=Rosekrans, Dee LMD=14-Jan-2015 LMB=Rocha, Wendy

If the vehicle has non-directional tires, they should be rotated every 12 000 km/7,500 mi. See *Maintenance Schedule* ⇨ *364*.

Tires are rotated to achieve a uniform wear for all tires. The first rotation is the most important.

Anytime unusual wear is noticed, rotate the tires as soon as possible, check for proper tire inflation pressure, and check for damaged tires or wheels. If the unusual wear continues after the

rotation, check the wheel alignment. See *When It Is Time for New Tires* ⇨ *333* and *Wheel Replacement* ⇨ *337*.

Directional tires should not be rotated. Each tire and wheel should be used only in the position it is in. Directional tires will have an arrow on the tire indicating the proper direction of rotation or will have “left” or “right” molded on the sidewall.

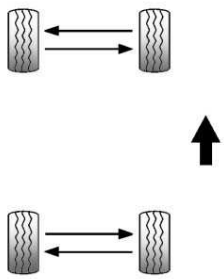

2579639

Use this rotation pattern if the vehicle has different size tires on the front and rear and they are non-directional.

Different tire sizes should not be rotated front to rear.

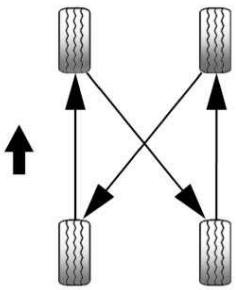

2195561

Use this rotation pattern when rotating tires of the same size installed on all four wheel positions.

If the vehicle has a compact spare tire, do not include it in the tire rotation.

Adjust the front and rear tires to the recommended inflation pressure on the Tire and Loading Information label after the tires have been rotated. See *Tire Pressure* ⇨ *325* and *Vehicle Load Limits* ⇨ *211*.

Reset the Tire Pressure Monitor System. See *Tire Pressure Monitor Operation* ⇨ *328*.

Check that all wheel nuts are properly tightened. See “Wheel Nut Torque” under *Capacities and Specifications* ⇨ *379*.

⚠ Warning

Object-ID=2210132 LMD=21-Oct-2010

Rust or dirt on a wheel, or on the parts to which it is fastened, can make wheel nuts become loose after time. The wheel could come off and cause an accident. When changing a wheel, remove any rust or dirt from places where the wheel attaches to the vehicle. In an

(Continued)

Warning (Continued)

Object-ID=2210132 LMD=21-Oct-2010

emergency, a cloth or a paper towel can be used; however, use a scraper or wire brush later to remove all rust or dirt.

Lightly coat the center of the wheel hub with wheel bearing grease after a wheel change or tire rotation to prevent corrosion or rust build-up. Do not get grease on the flat wheel mounting surface or on the wheel nuts or bolts.

When It Is Time for New Tires

Object-ID=2676876 Owner=Rosekrans, Dee LMD=14-Jan-2015 LMB=Rocha, Wendy

Factors such as maintenance, temperatures, driving speeds, vehicle loading, and road conditions affect the wear rate of the tires.

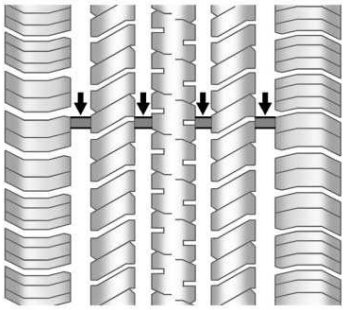

1970752

Treadwear indicators are one way to tell when it is time for new tires. Treadwear indicators appear when the tires have only 1.6 mm (1/16 in) or less of tread remaining. See *Tire Inspection* ⇨ *331* and *Tire Rotation* ⇨ *331*.

The rubber in tires ages over time. This also applies to the spare tire, if the vehicle has one, even if it is never used. Multiple factors including temperatures, loading conditions, and inflation pressure maintenance affect how fast aging takes place. GM recommends that tires, including the spare if equipped, be replaced after six years, regardless of tread wear. The tire manufacture date is the last four digits of the DOT Tire Identification Number (TIN) which is molded into one side of the tire sidewall. The first two digits represent the week (01–52) and the last two digits, the year. For example, the third week of the year 2010 would have a four-digit DOT date of 0310.

Vehicle Storage

Tires age when stored normally mounted on a parked vehicle. Park a vehicle that will be stored for at least a month in a cool, dry, clean area away from direct sunlight to slow aging. This area should be free of grease, gasoline, or other substances that can deteriorate rubber.

Parking for an extended period can cause flat spots on the tires that may result in vibrations while driving. When storing a vehicle for at least a month, remove the tires or raise the vehicle to reduce the weight from the tires.

Buying New Tires

Object-ID=2702805 Owner=Rosekrans, Dee
LMD=07-May-2015 LMB=Rosekrans, Dee

GM has developed and matched specific tires for the vehicle. The original equipment tires installed were designed to meet General Motors Tire Performance Criteria Specification (TPC Spec) system rating. When replacement tires are needed, GM strongly recommends buying tires with the same TPC Spec rating.

GM's exclusive TPC Spec system considers over a dozen critical specifications that impact the overall performance of the vehicle, including brake system performance, ride and handling, traction control, and tire pressure monitoring performance. GM's TPC Spec number is molded onto the tire's sidewall near the tire size. If the tires have an all-season tread design, the TPC Spec number will be followed by MS for mud and snow. See *Tire Sidewall Labeling* ⇨ *321*, for additional information.

GM recommends replacing worn tires in complete sets of four. Uniform tread depth on all tires will help to maintain the performance of the vehicle. Braking and handling performance may be adversely affected if all the tires are not replaced at the same time. If proper rotation and maintenance have been done, all four tires should wear out at about the same time. See *Tire Rotation* ⇨ *331* for information on proper tire rotation. However, if it is necessary to replace only one axle set of worn tires, place the new tires on the rear axle.

Winter tires with the same speed rating as the original equipment tires may not be available for H, V, W, and ZR speed rated tires. Never exceed the winter tire's maximum speed capability when using winter tires with a lower speed rating.

⚠ Warning

Object-ID=2374694 LMD=27-Apr-2011

Tires could explode during improper service. Attempting to mount or dismount a tire could cause injury or death. Only your dealer or authorized tire service center should mount or dismount the tires.

⚠ Warning

Object-ID=2210974 LMD=04-Oct-2010

Mixing tires of different sizes (other than those originally installed on the vehicle), brands, or types may cause loss of control of the vehicle, resulting in a crash or other vehicle damage. Use the correct size, brand, and type of tire on all four wheels.

⚠ Warning

Object-ID=2207975 LMD=30-Jun-2010

Using bias-ply tires on the vehicle may cause the wheel rim flanges to develop cracks after many miles of driving. A tire and/or wheel could fail suddenly and cause a crash. Use only radial-ply tires with the wheels on the vehicle.

If the vehicle tires must be replaced with a tire that does not have a TPC Spec number, make sure they are the same size, load range, speed rating, and construction (radial) as the original tires.

Vehicles that have a tire pressure monitoring system could give an inaccurate low-pressure warning if non-TPC Spec rated tires are installed. See *Tire Pressure Monitor Operation* ⇨ *328*.

The Tire and Loading Information label indicates the original equipment tires on the vehicle. See *Vehicle Load Limits* ⇨ *211*.

Different Size Tires and Wheels

Object-ID=2147539 Owner=Rosekrans, Dee LMD=12-May-2016 LMB=Rosekrans, Dee

If wheels or tires are installed that are a different size than the original equipment wheels and tires, vehicle performance, including its braking, ride and handling characteristics, stability, and resistance to rollover may be affected. If the vehicle has electronic systems such as antilock brakes, rollover airbags, traction control, electronic stability control, or All-Wheel Drive, the performance of these systems can also be affected.

⚠ Warning

Object-ID=2208983 LMD=30-Jun-2010

If different sized wheels are used, there may not be an acceptable level of performance and safety if tires not recommended for those wheels are selected. This increases the chance of a crash and serious injury. Only use GM specific wheel and tire systems developed for the vehicle, and have them properly installed by a GM certified technician.

See *Buying New Tires* ⇨ *334* and *Accessories and Modifications* ⇨ *279*.

Uniform Tire Quality Grading

Object-ID=3211555 Owner=Rosekrans, Dee LMD=14-Jan-2015 LMB=Rocha, Wendy

The following information relates to the system developed by the United States National Highway Traffic Safety Administration (NHTSA), which grades tires by treadwear, traction, and

temperature performance. This applies only to vehicles sold in the United States. The grades are molded on the sidewalls of most passenger car tires. The Uniform Tire Quality Grading (UTQG) system does not apply to deep tread, winter tires, compact spare tires, tires with nominal rim diameters of 10 to 12 inches (25 to 30 cm), or to some limited-production tires.

While the tires available on General Motors passenger cars and light trucks may vary with respect to these grades, they must also conform to federal safety requirements and additional General Motors Tire Performance Criteria (TPC) standards.

Quality grades can be found where applicable on the tire sidewall between tread shoulder and maximum section width. For example:

Treadwear 200 Traction AA Temperature A

All Passenger Car Tires Must Conform to Federal Safety Requirements In Addition To These Grades.

Treadwear

The treadwear grade is a comparative rating based on the wear rate of the tire when tested under controlled conditions on a specified government test course. For example, a tire graded 150 would wear one and one-half (1½) times as well on the government course as a tire graded 100. The relative performance of tires depends upon the actual conditions of their use, however, and may depart significantly from the norm due to variations in driving habits, service practices and differences in road characteristics and climate.

Traction

The traction grades, from highest to lowest, are AA, A, B, and C. Those grades represent the tire's ability to stop on wet pavement as measured under controlled conditions on specified government test surfaces of asphalt and concrete. A tire marked C may have poor traction performance. Warning: The traction grade assigned to this tire is based on straight-ahead braking traction tests, and does not include acceleration, cornering, hydroplaning, or peak traction characteristics.

Temperature

The temperature grades are A (the highest), B, and C, representing the tire's resistance to the generation of heat and its ability to dissipate heat when tested under controlled conditions on a specified indoor laboratory test wheel. Sustained high temperature

can cause the material of the tire to degenerate and reduce tire life, and excessive temperature can lead to sudden tire failure. The grade C corresponds to a level of performance which all passenger car tires must meet under the Federal Motor Safety Standard No. 109. Grades B and A represent higher levels of performance on the laboratory test wheel than the minimum required by law.
Warning: The temperature grade for this tire is established for a tire that is properly inflated and not overloaded. Excessive speed, underinflation, or excessive loading, either separately or in combination, can cause heat buildup and possible tire failure.

Wheel Alignment and Tire Balance

Object-ID=2147500 Owner=Rosekrans, Dee LMD=14-Jan-2015 LMB=Rocha, Wendy

The tires and wheels were aligned and balanced at the factory to provide the longest tire life and best overall performance. Adjustments to wheel alignment and tire balancing are not necessary on a regular basis. Consider an alignment check if there is unusual tire wear or the vehicle is significantly pulling to one side or the other. Some slight pull to the left or right, depending on the crown of the road and/or other road surface variations such as troughs or ruts, is normal.
If the vehicle is vibrating when driving on a smooth road, the tires and wheels may need to be rebalanced. See your dealer for proper diagnosis.

Wheel Replacement

Object-ID=2813440 Owner=Rosekrans, Dee LMD=13-Jan-2015 LMB=Rocha, Wendy

Replace any wheel that is bent, cracked, or badly rusted or corroded. If wheel nuts keep coming loose, the wheel, wheel bolts, and wheel nuts should be replaced. If the wheel leaks air, replace it. Some aluminum wheels can be repaired. See your dealer if any of these conditions exist.

Your dealer will know the kind of wheel that is needed.

Each new wheel should have the same load-carrying capacity, diameter, width, offset, and be mounted the same way as the one it replaces.

Replace wheels, wheel bolts, wheel nuts, or Tire Pressure Monitor System (TPMS) sensors with new GM original equipment parts.

⚠ Warning

Object-ID=2207983 LMD=26-Jul-2010

Using the wrong replacement wheels, wheel bolts, or wheel nuts can be dangerous. It could affect the braking and handling of the vehicle. Tires can lose air, and cause loss of control, causing a crash. Always use the correct wheel, wheel bolts, and wheel nuts for replacement.

Caution

Object-ID=2813433 LMD=30-Mar-2012

The wrong wheel can also cause problems with bearing life, brake cooling, speedometer or odometer calibration, headlamp aim, bumper height, vehicle ground clearance, and tire or tire chain clearance to the body and chassis.

Used Replacement Wheels

⚠ Warning

Object-ID=2208005 LMD=30-Jun-2010

Replacing a wheel with a used one is dangerous. How it has been used or how far it has been driven may be unknown. It could fail suddenly and cause a crash. When replacing wheels, use a new GM original equipment wheel.

Tire Chains

Object-ID=4099935 Owner=Rosekrans, Dee LMD=04-Mar-2015 LMB=Rosekrans, Dee

⚠ Warning

Object-ID=4099018 LMD=04-Mar-2015

If the vehicle has P245/40R18, 245/40R18, 275/35R18, 255/35R19, 265/35ZR19, or 295/30ZR19 size tires, do not use tire chains. There is not enough clearance. Tire chains used on a vehicle without the proper amount of clearance can cause damage to the brakes, suspension, or other vehicle parts. The area damaged by the tire chains could cause loss of control and a crash. Use another type of traction device only if its manufacturer recommends it for the vehicle's tire size combination and road conditions. Follow that manufacturer's instructions. To avoid vehicle damage, drive slow and readjust or remove the traction device if it contacts the vehicle. Do

(Continued)

Warning (Continued)

Object-ID=4099018 LMD=04-Mar-2015

not spin the wheels. If traction devices are used, install them on the rear tires.

Caution

Object-ID=4099594 LMD=04-Mar-2015

If the vehicle is equipped with a tire size other than P245/40R18, 245/40R18, 275/35R18, 255/35R19, 265/35ZR19, or 295/30ZR19 use tire chains only where legal and only when necessary. Use low profile chains that add no more than 12 mm thickness to the tire tread and inner sidewall. Use chains that are the proper size for the tires. Install them on the tires of the rear axle. Don't use chains on the tires of the front axle. Tighten them as tightly as possible with the ends securely fastened. Drive slowly and follow the chain manufacturer's

(Continued)

Caution (Continued)

Object-ID=4099594 LMD=04-Mar-2015

instructions. If the chains contact the vehicle, stop and retighten them. If the contact continues, slow down until it stops. Driving too fast or spinning the wheels with chains on will damage the vehicle.

If a Tire Goes Flat

Object-ID=2718808 Owner=Rosekrans, Dee LMD=19-May-2015 LMB=Rosekrans, Dee

If the vehicle has run-flat tires, there is no need to stop on the side of the road to change a flat tire. See *Run-Flat Tires* ⇨ *319*.

⚠ Warning

Object-ID=2208853 LMD=01-Oct-2010

Special tools and procedures are required to service a run-flat tire. If these special tools and procedures are not used, injury or vehicle damage may occur. Always

(Continued)

Warning (Continued)

Object-ID=2208853 LMD=01-Oct-2010

be sure the proper tools and procedures, as described in the service manual, are used.

It is unusual for a tire to blow out while driving, especially if the tires are maintained properly. See *Tires* ⇨ *318*. If air goes out of a tire, it is much more likely to leak out slowly. But if there is ever a blowout, here are a few tips about what to expect and what to do:

If a front tire fails, the flat tire creates a drag that pulls the vehicle toward that side. Take your foot off the accelerator pedal and grip the steering wheel firmly. Steer to maintain lane position, and then gently brake to a stop, well off the road, if possible.

A rear blowout, particularly on a curve, acts much like a skid and may require the same correction as used in a skid. Stop pressing the accelerator pedal and steer to straighten the vehicle. It may be very bumpy and noisy. Gently brake to a stop, well off the road, if possible.

⚠ Warning

Object-ID=2209242 LMD=13-Nov-2008

Lifting a vehicle and getting under it to do maintenance or repairs is dangerous without the appropriate safety equipment and training. If a jack is provided with the vehicle, it is designed only for changing a flat tire. If it is used for anything else, you or others could be badly injured or killed if the vehicle slips off the jack. If a jack is provided with the vehicle, only use it for changing a flat tire.

If this vehicle does not have run-flat tires and a tire goes flat, avoid further tire and wheel damage by driving slowly to a level place, well off the road, if possible.

1. Turn on the hazard warning flashers. See *Hazard Warning Flashers* ⇨ *173*.
2. Set the parking brake firmly.

3. Put an automatic transmission in P (Park) or a manual transmission in 1 (First) or R (Reverse).
4. Turn off the ignition.
5. Inspect the flat tire.

⚠ Warning

Object-ID=2374696 LMD=03-May-2010

Driving on a flat tire will cause permanent damage to the tire. Re-inflating a tire after it has been driven on while severely underinflated or flat may cause a blowout and a serious crash. Never attempt to re-inflate a tire that has been driven on while severely underinflated or flat. Have your dealer or an authorized tire service center repair or replace the flat tire as soon as possible.

If this vehicle has a tire sealant kit and the tire has been separated from the wheel, has damaged sidewalls, or has a puncture larger than 6 mm (0.25 in), the tire is too severely damaged for the tire sealant and compressor kit to be effective. If the tire has a puncture less than 6 mm (0.25 in) in the tread area of the tire, see *Tire Sealant and Compressor Kit* ⇨ *340*.

Tire Sealant and Compressor Kit

Object-ID=2857699 Owner=Rosekrans, Dee LMD=03-Dec-2014 LMB=Rocha, Wendy

⚠ Warning

Object-ID=2210101 LMD=21-Dec-2010

Idling a vehicle in an enclosed area with poor ventilation is dangerous. Engine exhaust may enter the vehicle. Engine exhaust contains carbon monoxide (CO) which cannot be seen or smelled. It can cause unconsciousness and even death. Never run the engine in an enclosed area that has no fresh air ventilation. For more information, see *Engine Exhaust* ⇨ *223*.

⚠ Warning

Object-ID=2210014 LMD=10-May-2010

Overinflating a tire could cause the tire to rupture and you or others could be injured. Be sure to read and follow the tire sealant and compressor kit instructions and inflate the tire to its recommended pressure. Do not exceed the recommended pressure.

⚠ Warning

Object-ID=2208453 LMD=11-Nov-2008

Storing the tire sealant and compressor kit or other equipment in the passenger compartment of the vehicle could cause injury. In a sudden stop or collision, loose equipment could strike someone. Store the tire sealant and compressor kit in its original location.

If this vehicle has a tire sealant and compressor kit, there may not be a spare tire or tire changing equipment, and on some vehicles there may not be a place to store a tire.

The tire sealant and compressor can be used to temporarily seal punctures up to 6 mm (0.25 in) in the tread area of the tire. It can also be used to inflate an underinflated tire.

If the tire has been separated from the wheel, has damaged sidewalls, or has a large puncture, the tire is too severely damaged for the tire sealant and compressor kit to be effective. See *Roadside Service (US/CAN)* ⇨ *388* or *Roadside Service (MEXICO)* ⇨ *390*.

Read and follow all of the tire sealant and compressor kit instructions.

The kit includes:

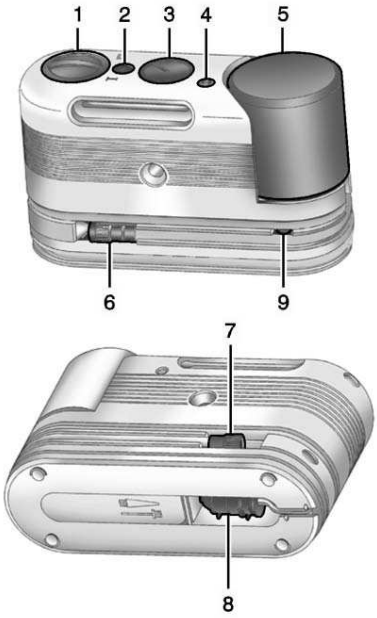

2714008

1. Selector Switch (Sealant/Air or Air Only)
2. On/Off Button
3. Pressure Gauge
4. Pressure Deflation Button
5. Tire Sealant Canister
6. Sealant/Air Hose (Clear)
7. Air Only Hose (Black)
8. Power Plug
9. Canister Release Button (Under Sealant/Air Hose)

Tire Sealant

Read and follow the safe handling instructions on the label adhered to the sealant canister.

Check the tire sealant expiration date on the sealant canister. The sealant canister should be replaced before its expiration date. Replacement sealant canisters are available at your local dealer. See “Removal and Installation of the Sealant Canister” following.

There is only enough sealant to seal one tire. After usage, the sealant canister and sealant/air hose assembly must be replaced. See “Removal and Installation of the Sealant Canister” following.

Using the Tire Sealant and Compressor Kit to Temporarily Seal and Inflate a Punctured Tire

Follow the directions closely for correct sealant usage.

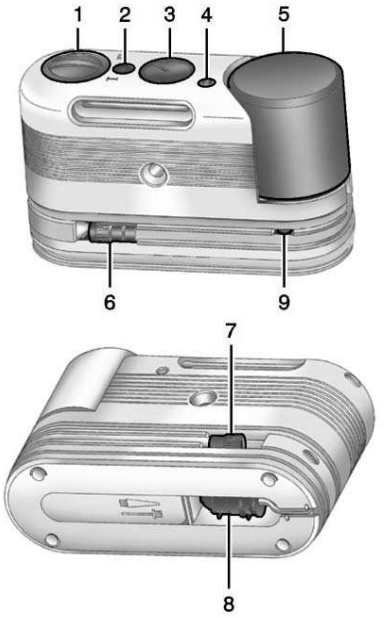

1. Selector Switch (Sealant/Air or Air Only)
2. On/Off Button
3. Pressure Gauge
4. Pressure Deflation Button
5. Tire Sealant Canister
6. Sealant/Air Hose (Clear)
7. Air Only Hose (Black)
8. Power Plug
9. Canister Release Button (Under Sealant/Air Hose)

When using the tire sealant and compressor kit during cold temperatures, warm the kit in a heated environment for five minutes. This will help to inflate the tire faster.

If a tire goes flat, avoid further tire and wheel damage by driving slowly to a level place. Turn on the hazard warning flashers. See *Hazard Warning Flashers* ⇨ *173*.

See *If a Tire Goes Flat* ⇨ *339* for other important safety warnings.

Do not remove any objects that have penetrated the tire.

1. Remove the tire sealant and compressor kit from its storage location. See *Storing the Tire Sealant and Compressor Kit* ⇨ *346*.
2. Unwrap the sealant/air hose (6) and the power plug (8).

3. Place the kit on the ground.

   Make sure the tire valve stem is positioned close to the ground so the hose will reach it.

4. Remove the valve stem cap from the flat tire by turning it counterclockwise.

5. Attach the sealant/air hose (6) onto the tire valve stem. Turn it clockwise until it is tight.

6. Plug the power plug (8) into the accessory power outlet in the vehicle. Unplug all items from other accessory power outlets. See *Power Outlets* ⇨ *116*.

   If the vehicle has an accessory power outlet, do not use the cigarette lighter.

   If the vehicle only has a cigarette lighter, use the cigarette lighter.

   Do not pinch the power plug cord in the door or window.

7. Start the vehicle. The vehicle must be running while using the air compressor.

8. Press and turn the selector switch (1) counterclockwise to the Sealant + Air position.

9. Press the on/off button (2) to turn the tire sealant and compressor kit on.

   The compressor will inject sealant and air into the tire.

   The pressure gauge (3) will initially show a high pressure while the compressor pushes the sealant into the tire. Once the sealant is completely dispersed into the tire, the pressure will quickly drop and start to rise again as the tire inflates with air only.

10. Inflate the tire to the recommended inflation pressure using the pressure gauge (3). The recommended inflation pressure can be found on the Tire and Loading Information label. See *Tire Pressure* ⇨ *325*.

    The pressure gauge (3) may read higher than the actual tire pressure while the compressor is on. Turn the compressor off to get an accurate pressure reading. The compressor may be turned on/off until the correct pressure is reached.

Caution

Object-ID=2857693 LMD=17-May-2012

If the recommended pressure cannot be reached after approximately 25 minutes, the vehicle should not be driven farther. The tire is too severely damaged and the tire sealant and compressor kit cannot inflate the tire. Remove the power plug from the accessory power outlet and unscrew the inflating hose from the tire valve. See *Roadside Service (US/CAN)* ⇨ *388* or *Roadside Service (MEXICO)* ⇨ *390*.

11. Press the on/off button (2) to turn the tire sealant and compressor kit off.

    The tire is not sealed and will continue to leak air until the vehicle is driven and the sealant

is distributed in the tire, therefore, Steps 12–18 must be done immediately after Step 11.

Be careful while handling the tire sealant and compressor kit as it could be warm after usage.

12. Unplug the power plug (8) from the accessory power outlet in the vehicle.
13. Turn the sealant/air hose (6) counterclockwise to remove it from the tire valve stem.
14. Replace the tire valve stem cap.
15. Replace the sealant/air hose (6), and the power plug (8) back in their original location.

2360199

16. If the flat tire was able to inflate to the recommended inflation pressure, remove the maximum speed label from the sealant canister (5) and place it in a highly visible location. Do not exceed the speed on this label until the damaged tire is repaired or replaced.
17. Return the equipment to its original storage location in the vehicle.
18. Immediately drive the vehicle 8 km (5 mi) to distribute the sealant in the tire.
19. Stop at a safe location and check the tire pressure. Refer to Steps 1–11 under "Using the Tire Sealant and Compressor Kit without Sealant to Inflate a Tire (Not Punctured)."

    If the tire pressure has fallen more than 68 kPa (10 psi) below the recommended inflation pressure, stop driving the vehicle. The tire is too severely damaged and the tire sealant cannot seal the tire. See *Roadside Service (US/CAN)* ⇨ *388* or *Roadside Service (MEXICO)* ⇨ *390*.

    If the tire pressure has not dropped more than 68 kPa (10 psi) from the recommended inflation pressure, inflate the tire to the recommended inflation pressure.
20. Wipe off any sealant from the wheel, tire, and vehicle.
21. Dispose of the used sealant canister (5) and sealant/air hose (6) assembly at a local dealer or in accordance with local state codes and practices.
22. Replace with a new canister assembly available from your dealer.
23. After temporarily sealing the tire using the tire sealant and compressor kit, take the vehicle to an authorized dealer within 161 km (100 mi) of driving to have the tire repaired or replaced.

Using the Tire Sealant and Compressor Kit without Sealant to Inflate a Tire (Not Punctured)

To use the air compressor to inflate a tire with air only and not sealant:

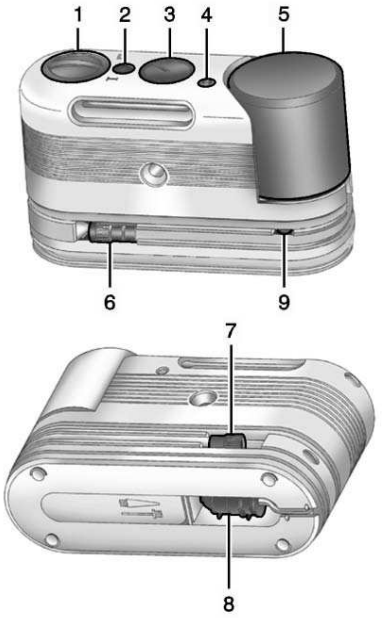

1. Selector Switch (Sealant/Air or Air Only)
2. On/Off Button
3. Pressure Gauge
4. Pressure Deflation Button
5. Tire Sealant Canister
6. Sealant/Air Hose (Clear)
7. Air Only Hose (Black)
8. Power Plug
9. Canister Release Button (Under Sealant/Air Hose)

If a tire goes flat, avoid further tire and wheel damage by driving slowly to a level place. Turn on the hazard warning flashers. See *Hazard Warning Flashers* ⇨ *173*.

See *If a Tire Goes Flat* ⇨ *339* for other important safety warnings.

1. Remove the tire sealant and compressor kit from its storage location. See *Storing the Tire Sealant and Compressor Kit* ⇨ *346*.
2. Unwrap the air only hose (7) and the power plug (8).
3. Place the kit on the ground.

   Make sure the tire valve stem is positioned close to the ground so the hose will reach it.
4. Remove the tire valve stem cap from the flat tire by turning it counterclockwise.
5. Attach the air only hose (7) onto the tire valve stem by turning it clockwise until it is tight.
6. Plug the power plug (8) into the accessory power outlet in the vehicle. Unplug all items from other accessory power outlets. See *Power Outlets* ⇨ *116*.

   If the vehicle has an accessory power outlet, do not use the cigarette lighter.

   If the vehicle only has a cigarette lighter, use the cigarette lighter.

   Do not pinch the power plug cord in the door or window.
7. Start the vehicle. The vehicle must be running while using the air compressor.
8. Press and turn the selector switch (1) clockwise to the Air Only position.
9. Press the on/off button (2) to turn the compressor on.

   The compressor will inflate the tire with air only.

10. Inflate the tire to the recommended inflation pressure using the pressure gauge (3). The recommended inflation pressure can be found on the Tire and Loading Information label. See *Tire Pressure* ⇨ *325*.

    The pressure gauge (3) may read higher than the actual tire pressure while the compressor is on. Turn the compressor off to get an accurate reading. The compressor may be turned on/off until the correct pressure is reached.

    If you inflate the tire higher than the recommended pressure you can adjust the excess pressure by pressing the pressure deflation button (4) until the proper pressure reading is reached. This option is only functional when using the air only hose (7).

11. Press the on/off button (2) to turn the tire sealant and compressor kit off.

    Be careful while handling the tire sealant and compressor kit as it could be warm after usage.

12. Unplug the power plug (8) from the accessory power outlet in the vehicle.

13. Disconnect the air only hose (7) from the tire valve stem, by turning it counterclockwise, and replace the tire valve stem cap.

14. Replace the air only hose (7) and the power plug (8) and cord back in its original location.

15. Place the equipment in the original storage location in the vehicle.

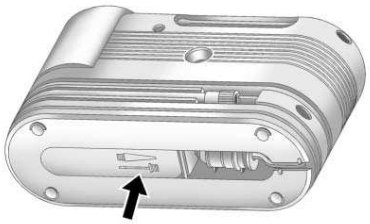

2054298

The tire sealant and compressor kit has an accessory adapter located in a compartment on the bottom of its housing that may be used to inflate air mattresses, balls, etc.

Removal and Installation of the Sealant Canister

To remove the sealant canister:

1. Unwrap the sealant hose.
2. Press the canister release button (9).
3. Pull up and remove the canister.
4. Replace with a new canister which is available from your dealer.
5. Push the new canister into place.

Storing the Tire Sealant and Compressor Kit

Object-ID=4058135 Owner=Rosekrans, Dee
LMD=08-Jan-2015 LMB=Rosekrans, Dee

To access the tire sealant and compressor kit:

1. Open the trunk. See *Trunk* ⇨ *44*.
2. Lift the cover.

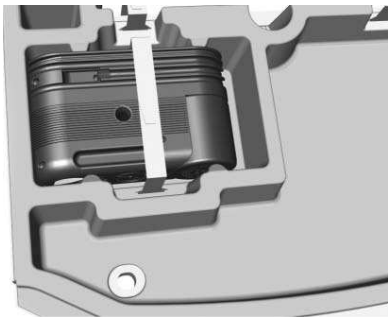

4058126

3. Remove the strap.
4. Remove the tire sealant and compressor kit.

To store the tire sealant and compressor kit, reverse the steps.

Jump Starting

Jump Starting - North America

Object-ID=4010650 Owner=Garcia, Sid LMD=16-Feb-2015 LMB=Garcia, Sid

For more information about the vehicle battery, see *Battery - North America* ⇨ *303*.

If the battery has run down, try to use another vehicle and some jumper cables to start your vehicle. Be sure to use the following steps to do it safely.

⚠ Warning

Object-ID=2548511 LMD=15-Oct-2015

WARNING: Battery posts, terminals, and related accessories contain lead and lead compounds, chemicals known to the State of California to cause cancer and birth defects or other reproductive harm. Batteries also contain other chemicals known to the State of California to cause cancer. **WASH HANDS AFTER HANDLING.**

(Continued)

Warning (Continued)

Object-ID=2548511 LMD=15-Oct-2015

See *California Proposition 65 Warning* ⇨ *278*.

⚠ Warning

Object-ID=2208415 LMD=11-Nov-2008

Batteries can hurt you. They can be dangerous because:

- They contain acid that can burn you.
- They contain gas that can explode or ignite.
- They contain enough electricity to burn you.

If you do not follow these steps exactly, some or all of these things can hurt you.

Caution

Object-ID=2834173 LMD=01-Nov-2012

Ignoring these steps could result in costly damage to the vehicle that would not be covered by the vehicle warranty. Trying to start the vehicle by pushing or pulling it will not work, and it could damage the vehicle.

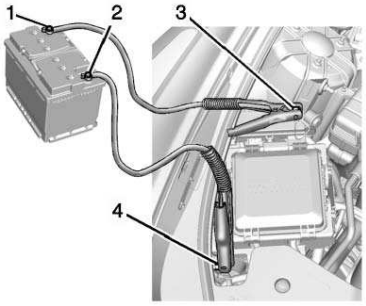

2910993

1. Good Battery Positive Terminal
2. Good Battery Negative Terminal
3. Discharged Battery Remote Positive terminal
4. Discharged Battery Remote Negative Ground Terminal

The jump start positive terminal (1) and negative post (2) are on the battery of the vehicle providing the jump start.

The jump start remote positive terminal (3) and the remote negative ground terminal (4) for the discharged battery are on the passenger side of the vehicle.

The positive jump start connection for the discharged battery is under a red cover. Remove the cover to expose the terminal.

1. Check the other vehicle. It must have a 12-volt battery with a negative ground system.

Caution

Object-ID=2834178 LMD=27-Jun-2012

If the other vehicle does not have a 12-volt system with a negative ground, both vehicles can be

(Continued)

Caution (Continued)

Object-ID=2834178 LMD=27-Jun-2012

damaged. Only use a vehicle that has a 12-volt system with a negative ground for jump starting.

2. Position the two vehicles so that they are not touching.
3. Set the parking brake firmly and put the shift lever in P (Park) with an automatic transmission, or Neutral with a manual transmission.

Caution

Object-ID=2834179 LMD=27-Jun-2012

If any accessories are left on or plugged in during the jump starting procedure, they could be damaged. The repairs would not be covered by the vehicle warranty. Whenever possible, turn off or unplug all accessories on either vehicle when jump starting.

4. Set the ignition to OFF. Turn off all lights and accessories in both vehicles, except the hazard warning flashers if needed.

⚠ Warning

Object-ID=2208417 LMD=09-Jan-2015

An electric fan can start up even when the engine is not running and can injure you. Keep hands, clothing, and tools away from any underhood electric fan.

⚠ Warning

Object-ID=3909884 LMD=21-May-2014

Using a match near a battery can cause battery gas to explode. People have been hurt doing this, and some have been blinded. Use a flashlight if you need more light.

Battery fluid contains acid that can burn you. Do not get it on you. If you accidentally get it in your

(Continued)

Warning (Continued)

Object-ID=3909884 LMD=21-May-2014

eyes or on your skin, flush the place with water and get medical help immediately.

⚠ Warning

Object-ID=2208421 LMD=11-Nov-2008

Fans or other moving engine parts can injure you badly. Keep your hands away from moving parts once the engine is running.

5. Connect one end of the red positive (+) cable to the remote positive (+) terminal on the discharged battery.
6. Connect the other end of the red positive (+) cable to the positive (+) terminal of the good battery.
7. Connect one end of the black negative (–) cable to the negative (–) terminal of the good battery.
8. Connect the other end of the black negative (–) cable to the remote negative (–) grounding terminal for the discharged battery.
9. Start the engine in the vehicle with the good battery and run the engine at idle speed for at least four minutes.
10. Try to start the vehicle that had the dead battery. If it will not start after a few tries, it probably needs service.

Caution

Object-ID=2834180 LMD=18-Apr-2012

If the jumper cables are connected or removed in the wrong order, electrical shorting may occur and damage the vehicle. The repairs would not be covered by the vehicle warranty. Always connect and remove the jumper cables in the correct order, making sure that the cables do not touch each other or other metal.

Jumper Cable Removal

Reverse the sequence exactly when removing the jumper cables.

After starting the disabled vehicle and removing the jumper cables, allow it to idle for several minutes.

Towing the Vehicle

Object-ID=3981841 Owner=Cusenza, Mark LMD=26-Apr-2016 LMB=Cusenza, Mark

Caution

Object-ID=4147540 LMD=13-Apr-2015

Incorrectly towing a disabled vehicle may cause damage. The damage would not be covered by the vehicle warranty.

Do not lash or hook to suspension components. Use the proper straps around the tires to secure the vehicle.

Have the vehicle towed on a flatbed car carrier. A wheel lift tow truck could damage the vehicle.

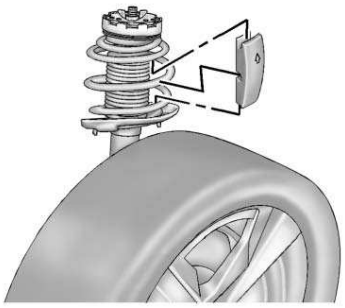

2739231

Due to low ramp angles on the V-Series only, use care when loading the vehicle onto a flatbed carrier. Front spring spacers were provided for lifting the front suspension if more clearance is necessary when towing.

Consult your dealer or a professional towing service if the disabled vehicle must be towed.

If the vehicle is equipped with tow eye, only use the tow eye to pull the vehicle onto a flatbed car carrier from a flat road surface. Do not use the tow eye to pull the vehicle from snow, mud or sand.

Caution

Object-ID=3290669 LMD=06-Jan-2015

Improper use of the tow eye can cause vehicle damage. Use caution and low speeds to prevent damage to the vehicle.

Carefully open the cover in the fascia by using the small notch that conceals the tow eye socket.

Install the tow eye into the socket by turning it clockwise until it stops. When the tow eye is removed, reinstall the cover with the notch in the original position.

Recreational Vehicle Towing

Object-ID=2964556 Owner=Cusenza, Mark LMD=05-Jan-2015 LMB=Cusenza, Mark

Recreational vehicle towing means towing the vehicle behind another vehicle such as a motor home. The two most common types of recreational vehicle towing are known as dinghy towing and dolly towing. Dinghy towing is towing the vehicle with all four wheels on the ground. Dolly towing is towing the vehicle with two wheels on the ground and two wheels up on a device known as a dolly.

Here are some important things to consider before recreational vehicle towing:

- What is the towing capacity of the towing vehicle? Be sure to read the tow vehicle manufacturer's recommendations.
- What is the distance that will be traveled? Some vehicles have restrictions on how far and how long they can tow.
- Is the proper towing equipment going to be used? See your dealer or trailering professional for additional advice and equipment recommendations.
- Is the vehicle ready to be towed? Just as preparing the vehicle for a long trip, make sure the vehicle is prepared to be towed.

Dinghy Towing

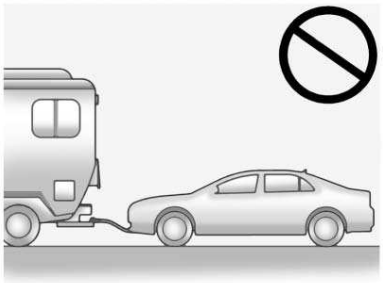

2206848

Caution

Object-ID=2866734 LMD=06-Jan-2015

If the vehicle is towed with all four wheels on the ground, the drivetrain components could be damaged. The repairs would not be

(Continued)

Caution (Continued)

Object-ID=2866734 LMD=06-Jan-2015

covered by the vehicle warranty. Do not tow the vehicle with all four wheels on the ground.

The vehicle was not designed to be towed with all four wheels on the ground. If the vehicle must be towed, a dolly should be used. See the following information on dolly towing.

Caution

Object-ID=3603312 LMD=06-Jan-2015

Use of a shield mounted in front of the vehicle grille could restrict airflow and cause damage to the transmission. The repairs would not

(Continued)

Caution (Continued)

Object-ID=3603312 LMD=06-Jan-2015

be covered by the vehicle warranty. If using a shield, only use one that attaches to the towing vehicle.

Dolly Towing (Rear-Wheel-Drive Vehicles)

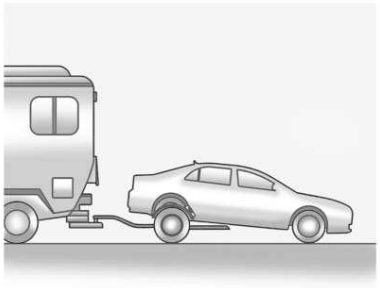

2206853

To dolly tow a rear-wheel-drive vehicle from the rear:

1. Attach the dolly to the tow vehicle following the dolly manufacturer instructions.
2. Put the rear wheels on the dolly.
3. Shift the transmission to P (Park).
4. Firmly set the parking brake.
5. Use an adequate clamping device designed for towing to ensure that the front wheels are locked into the straight-ahead position.
6. Secure the vehicle to the dolly following the manufacturer instructions.
7. Release the parking brake only after the vehicle being towed is firmly attached to the towing vehicle.

8. Turn the ignition to OFF.

Dolly Towing (All-Wheel Drive Vehicles)

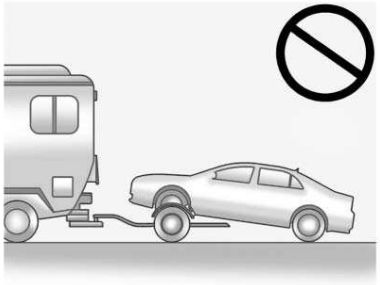

2206854

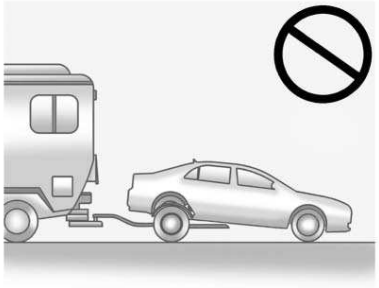

2159950

Vehicles with all-wheel drive cannot be dolly towed.

Appearance Care

Exterior Care

Object-ID=4482656 Owner=Perkins, Frank LMD=30-Mar-2016 LMB=Perkins, Frank

Locks

Locks are lubricated at the factory. Use a de-icing agent only when absolutely necessary, and have the locks greased after using. See *Recommended Fluids and Lubricants* ⇨ *372*.

Washing the Vehicle

To preserve the vehicle's finish, wash it often and out of direct sunlight.

Caution

Object-ID=2815636 LMD=21-Feb-2013

Do not use petroleum-based, acidic, or abrasive cleaning agents as they can damage the vehicle's paint, metal, or plastic parts. If damage occurs, it would not be covered by the vehicle warranty. Approved cleaning products can be obtained

(Continued)

Caution (Continued)

Object-ID=2815636 LMD=21-Feb-2013

from your dealer. Follow all manufacturer directions regarding correct product usage, necessary safety precautions, and appropriate disposal of any vehicle care product.

Caution

Object-ID=2815818 LMD=05-Apr-2012

Avoid using high-pressure washes closer than 30 cm (12 in) to the surface of the vehicle. Use of power washers exceeding 8,274 kPa (1,200 psi) can result in damage or removal of paint and decals.

Caution

Object-ID=4194415 LMD=19-May-2015

Do not power wash any component under the hood that has this symbol.

This could cause damage that would not be covered by the vehicle warranty.

If using an automatic car wash, follow the car wash instructions. The windshield wiper and rear window wiper, if equipped, must be off. Remove any accessories that may be damaged or interfere with the car wash equipment.

Rinse the vehicle well, before washing and after, to remove all cleaning agents completely. If they are allowed to dry on the surface, they could stain.

Dry the finish with a soft, clean chamois or an all-cotton towel to avoid surface scratches and water spotting.

Finish Care

Application of aftermarket clearcoat sealant/wax materials is not recommended. If painted surfaces are damaged, see your dealer to have the damage assessed and repaired. Foreign materials such as calcium chloride and other salts, ice melting agents, road oil and tar, tree sap, bird droppings, chemicals from industrial chimneys, etc., can damage the vehicle's finish if they remain on painted surfaces. Wash the vehicle as soon as possible. If necessary, use non-abrasive cleaners that are marked safe for painted surfaces to remove foreign matter.

Occasional hand waxing or mild polishing should be done to remove residue from the paint finish. See your dealer for approved cleaning products.

Do not apply waxes or polishes to uncoated plastic, vinyl, rubber, decals, simulated wood, or flat paint as damage can occur.

Cadillac CTS/CTS-V Owner Manual (GMNA-Localizing-U.S./Canada-2ndPrint-11254870) - 2017 - Final Review - 6/14/16

Caution

Object-ID=2815849 LMD=05-Apr-2012

Machine compounding or aggressive polishing on a basecoat/clearcoat paint finish may damage it. Use only non-abrasive waxes and polishes that are made for a basecoat/clearcoat paint finish on the vehicle.

To keep the paint finish looking new, keep the vehicle garaged or covered whenever possible.

Protecting Exterior Bright Metal Moldings

Caution

Object-ID=2912997 LMD=26-Sep-2012

Failure to clean and protect the bright metal moldings can result in a hazy white finish or pitting. This damage would not be covered by the vehicle warranty.

The bright metal moldings on the vehicle are aluminum, chrome or stainless steel. To prevent damage always follow these cleaning instructions:

- Be sure the molding is cool to the touch before applying any cleaning solution.
- Use only approved cleaning solutions for aluminum, chrome or stainless steel. Some cleaners are highly acidic or contain alkaline substances and can damage the moldings.
- Always dilute a concentrated cleaner according to the manufacturer's instructions.
- Do not use cleaners that are not intended for automotive use.
- Use a nonabrasive wax on the vehicle after washing to protect and extend the molding finish.

Carbon Fiber Care

Carbon fiber composite parts can be washed and waxed like any other parts. Use a clear or black pigmented wax. See *Composite Materials* ➪ *215*.

Cleaning Exterior Lamps/Lenses, Emblems, Decals, and Stripes

Use only lukewarm or cold water, a soft cloth, and a car washing soap to clean exterior lamps, lenses, emblems, decals, and stripes. Follow instructions under "Washing the Vehicle" previously in this section.

Lamp covers are made of plastic, and some have a UV protective coating. Do not clean or wipe them when dry.

Do not use any of the following on lamp covers:

- Abrasive or caustic agents.
- Washer fluids and other cleaning agents in higher concentrations than suggested by the manufacturer.
- Solvents, alcohols, fuels, or other harsh cleaners.
- Ice scrapers or other hard items.
- Aftermarket appearance caps or covers while the lamps are illuminated, due to excessive heat generated.

Caution

Object-ID=3374142 LMD=02-Apr-2013

Failure to clean lamps properly can cause damage to the lamp cover that would not be covered by the vehicle warranty.

Caution

Object-ID=3440790 LMD=13-May-2013

Using wax on low gloss black finish stripes can increase the gloss level and create a non-uniform finish. Clean low gloss stripes with soap and water only.

Air Intakes

Clear debris from the air intakes, between the hood and windshield when washing the vehicle.

Windshield and Wiper Blades

Clean the outside of the windshield with glass cleaner.

Clean rubber blades using a lint-free cloth or paper towel soaked with windshield washer fluid or a mild detergent. Wash the windshield thoroughly when cleaning the blades. Bugs, road grime, sap, and a buildup of vehicle wash/wax treatments may cause wiper streaking.

Replace the wiper blades if they are worn or damaged. Damage can be caused by extreme dusty conditions, sand, salt, heat, sun, snow, and ice.

Weatherstrips

Apply Dielectric silicone grease on weatherstrips to make them last longer, seal better, and not stick or squeak. Lubricate weatherstrips at least once a year. Hot, dry climates may require more frequent application. Black marks from rubber material on painted surfaces can be removed by rubbing with a clean cloth. See *Recommended Fluids and Lubricants* ⇨ *372*.

Tires

Use a stiff brush with tire cleaner to clean the tires.

Caution

Object-ID=2815877 LMD=05-Apr-2012

Using petroleum-based tire dressing products on the vehicle may damage the paint finish and/or tires. When applying a tire dressing, always wipe off any overspray from all painted surfaces on the vehicle.

Wheels and Trim — Aluminum or Chrome

Use a soft, clean cloth with mild soap and water to clean the wheels. After rinsing thoroughly with clean water, dry with a soft, clean towel. A wax may then be applied.

Caution

Object-ID=2815892 LMD=05-Apr-2012

Chrome wheels and other chrome trim may be damaged if the vehicle is not washed after driving on roads that have been sprayed with magnesium, calcium, or sodium chloride. These chlorides are used

(Continued)

Caution (Continued)

Object-ID=2815892 LMD=05-Apr-2012

on roads for conditions such as ice and dust. Always wash the chrome with soap and water after exposure.

Caution

Object-ID=2815902 LMD=05-Apr-2012

To avoid surface damage, do not use strong soaps, chemicals, abrasive polishes, cleaners, brushes, or cleaners that contain acid on aluminum or chrome-plated wheels. Use only approved cleaners. Also, never drive a vehicle with aluminum or chrome-plated wheels through an automatic car wash that uses silicone carbide tire cleaning brushes. Damage could occur and the repairs would not be covered by the vehicle warranty.

Brake System

Visually inspect brake lines and hoses for proper hook-up, binding, leaks, cracks, chafing, etc. Inspect disc brake pads for wear and rotors for surface condition. Inspect drum brake linings/shoes for wear or cracks. Inspect all other brake parts.

Steering, Suspension, and Chassis Components

Visually inspect steering, suspension, and chassis components for damaged, loose, or missing parts or signs of wear at least once a year.

Inspect power steering for proper attachment, connections, binding, leaks, cracks, chafing, etc.

Visually check constant velocity joint boots and axle seals for leaks.

Body Component Lubrication

Lubricate all key lock cylinders, hood hinges, liftgate hinges, and the steel fuel door hinge, unless the components are plastic. Applying silicone grease on weatherstrips with a clean cloth will make them last longer, seal better, and not stick or squeak.

Underbody Maintenance

At least twice a year, spring and fall, use plain water to flush any corrosive materials from the underbody. Take care to thoroughly clean any areas where mud and other debris can collect.

Do not directly power wash the transfer case and/or front/rear axle output seals. High pressure water can overcome the seals and contaminate the fluid. Contaminated fluid will decrease the life of the transfer case and/or axles and should be replaced.

Sheet Metal Damage

If the vehicle is damaged and requires sheet metal repair or replacement, make sure the body repair shop applies anti-corrosion material to parts repaired or replaced to restore corrosion protection.

Original manufacturer replacement parts will provide the corrosion protection while maintaining the vehicle warranty.

Finish Damage

Quickly repair minor chips and scratches with touch-up materials available from your dealer to avoid corrosion. Larger areas of finish damage can be corrected in your dealer's body and paint shop.

Chemical Paint Spotting

Airborne pollutants can fall upon and attack painted vehicle surfaces causing blotchy, ring-shaped discolorations, and small, irregular dark spots etched into the paint surface. See “Finish Care” previously in this section.

Interior Care

Object-ID=3961865 Owner=Perkins, Frank LMD=22-Sep-2015 LMB=Perkins, Frank

To prevent dirt particle abrasions, regularly clean the vehicle's interior. Immediately remove any soils. Newspapers or dark garments can transfer color to the vehicle’s interior.

Use a soft bristle brush to remove dust from knobs and crevices on the instrument cluster. Using a mild soap solution, immediately remove hand lotions, sunscreen, and insect repellent from all interior surfaces or permanent damage may result.

Use cleaners specifically designed for the surfaces being cleaned to prevent permanent damage. Apply all cleaners directly to the cleaning cloth. Do not spray cleaners on any switches or controls. Remove cleaners quickly.

Before using cleaners, read and follow all safety instructions on the label. While cleaning the interior, open the doors and windows to get proper ventilation.

To prevent damage, do not clean the interior using the following cleaners or techniques:

- Never use a razor or any other sharp object to remove soil from any interior surface.
- Never use a brush with stiff bristles.
- Never rub any surface aggressively or with too much pressure.
- Do not use laundry detergents or dishwashing soaps with degreasers. For liquid cleaners, use approximately 20 drops per 3.8 L (1 gal) of water. A concentrated soap solution will create streaks and attract dirt. Do not use solutions that contain strong or caustic soap.
- Do not heavily saturate the upholstery when cleaning.
- Do not use solvents or cleaners containing solvents.

Interior Glass

To clean, use a terry cloth fabric dampened with water. Wipe droplets left behind with a clean dry cloth. If necessary, use a commercial glass cleaner after cleaning with plain water.

Caution

Object-ID=2817141 LMD=05-Apr-2012

To prevent scratching, never use abrasive cleaners on automotive glass. Abrasive cleaners or aggressive cleaning may damage the rear window defogger.

Cleaning the windshield with water during the first three to six months of ownership will reduce tendency to fog.

Speaker Covers

Vacuum around a speaker cover gently, so that the speaker will not be damaged. Clean spots with water and mild soap.

Coated Moldings

Coated moldings should be cleaned.

- When lightly soiled, wipe with a sponge or soft, lint-free cloth dampened with water.
- When heavily soiled, use warm soapy water.

Fabric/Carpet/Suede

Start by vacuuming the surface using a soft brush attachment. If a rotating vacuum brush attachment is being used, only use it on the floor carpet. Before cleaning, gently remove as much of the soil as possible:

- Gently blot liquids with a paper towel. Continue blotting until no more soil can be removed.
- For solid soils, remove as much as possible prior to vacuuming.

To clean:

1. Saturate a clean, lint-free colorfast cloth with water. Microfiber cloth is recommended to prevent lint transfer to the fabric or carpet.
2. Remove excess moisture by gently wringing until water does not drip from the cleaning cloth.
3. Start on the outside edge of the soil and gently rub toward the center. Fold the cleaning cloth to a clean area frequently to prevent forcing the soil in to the fabric.
4. Continue gently rubbing the soiled area until there is no longer any color transfer from the soil to the cleaning cloth.
5. If the soil is not completely removed, use a mild soap solution followed only by plain water.

If the soil is not completely removed, it may be necessary to use a commercial upholstery cleaner or spot lifter. Test a small hidden area for colorfastness before using a commercial upholstery cleaner or spot lifter. If ring formation occurs, clean the entire fabric or carpet.

After cleaning, use a paper towel to blot excess moisture.

Cleaning High Gloss Surfaces and Vehicle Information and Radio Displays

Use a microfiber cloth on high gloss surfaces or vehicle displays. First, use a soft bristle brush to remove dirt that can scratch the surface. Then gently clean by rubbing with a microfiber cloth. Never use window cleaners or solvents. Periodically hand wash the microfiber cloth separately, using mild soap. Do not use bleach or fabric softener. Rinse thoroughly and air dry before next use.

Caution

Object-ID=2833373 LMD=22-Jul-2014

Do not attach a device with a suction cup to the display. This may cause damage and would not be covered by the vehicle warranty.

Instrument Panel, Leather, Vinyl, Other Plastic Surfaces, Low Gloss Paint Surfaces, and Natural Open Pore Wood Surfaces

Use a soft microfiber cloth dampened with water to remove dust and loose dirt. For a more thorough cleaning, use a soft microfiber cloth dampened with a mild soap solution.

Caution

Object-ID=2817153 LMD=08-Aug-2014

Soaking or saturating leather, especially perforated leather, as well as other interior surfaces, may cause permanent damage. Wipe excess moisture from these surfaces after cleaning and allow them to dry naturally. Never use heat, steam, or spot removers. Do not use cleaners that contain silicone or wax-based products. Cleaners containing these solvents can permanently change the appearance and feel of leather or soft trim, and are not recommended.

Do not use cleaners that increase gloss, especially on the instrument panel. Reflected glare can decrease visibility through the windshield under certain conditions.

Caution

Object-ID=2817159 LMD=05-Apr-2012

Use of air fresheners may cause permanent damage to plastics and painted surfaces. If an air freshener comes in contact with any plastic or painted surface in the vehicle, blot immediately and clean with a soft cloth dampened with a mild soap solution. Damage caused by air fresheners would not be covered by the vehicle warranty.

Cargo Cover and Convenience Net

Wash with warm water and mild detergent. Do not use chlorine bleach. Rinse with cold water, and then dry completely.

Care of Safety Belts

Keep belts clean and dry.

⚠ Warning

Object-ID=2208127 LMD=13-Oct-2015

Do not bleach or dye safety belt webbing. It may severely weaken the webbing. In a crash, they might not be able to provide adequate protection. Clean and rinse safety belt webbing only with mild soap and lukewarm water. Allow the webbing to dry.

Floor Mats

Object-ID=3942452 Owner=Perkins, Frank LMD=01-Oct-2015 LMB=Perkins, Frank

⚠ Warning

Object-ID=2425970 LMD=31-Jul-2012

If a floor mat is the wrong size or is not properly installed, it can interfere with the pedals. Interference with the pedals can cause unintended acceleration and/or increased stopping distance which can cause a crash and injury. Make sure the floor mat does not interfere with the pedals.

Use the following guidelines for proper floor mat usage.

- The original equipment floor mats were designed for your vehicle. If the floor mats need replacing, it is recommended that GM certified floor mats be purchased. Non-GM floor mats may not fit properly and may interfere with the pedals. Always check that the floor mats do not interfere with the pedals.
- Do not use a floor mat if the vehicle is not equipped with a floor mat retainer on the driver side floor.
- Use the floor mat with the correct side up. Do not turn it over.
- Do not place anything on top of the driver side floor mat.
- Use only a single floor mat on the driver side.
- Do not place one floor mat on top of another.

The driver side floor mat is held in place by two button-type retainers.

Removing and Replacing the Floor Mats

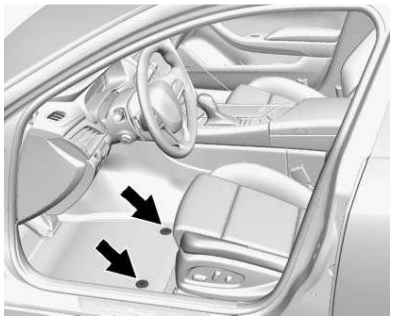

2906824

1. Pull up on the rear of the floor mat to unlock the retainers and remove.
2. Reinstall by lining up the floor mat retainer openings over the carpet retainers and snap into position.
3. Make sure the floor mat is properly secured in place. Verify the floor mat does not interfere with the pedals.

Cadillac CTS/CTS-V Owner Manual (GMNA-Localizing-U.S./Canada-2ndPrint-11254870) - 2017 - Final Review - 6/14/16

Service and Maintenance

General Information
General Information 362

Cadillac Premium Care Maintenance
Cadillac Premium Care Maintenance 364

Maintenance Schedule
Maintenance Schedule 364

Special Application Services
Special Application Services 369

Additional Maintenance and Care
Additional Maintenance and Care 370

Recommended Fluids, Lubricants, and Parts
Recommended Fluids and Lubricants 372
Maintenance Replacement Parts 374

Maintenance Records
Maintenance Records 376

General Information

Object-ID=3405130 Owner=Dobson, Bert
LMD=15-Apr-2013 LMB=Dobson, Bert

Your vehicle is an important investment. This section describes the required maintenance for the vehicle. Follow this schedule to help protect against major repair expenses resulting from neglect or inadequate maintenance. It may also help to maintain the value of the vehicle if it is sold. It is the responsibility of the owner to have all required maintenance performed.

Your dealer has trained technicians who can perform required maintenance using genuine replacement parts. They have up-to-date tools and equipment for fast and accurate diagnostics. Many dealers have extended evening and Saturday hours, courtesy transportation, and online scheduling to assist with service needs.

Your dealer recognizes the importance of providing competitively priced maintenance and repair services. With trained technicians, the dealer is the place for routine maintenance such as

oil changes and tire rotations and additional maintenance items like tires, brakes, batteries, and wiper blades.

Caution

Object-ID=2826229 LMD=09-Apr-2012

Damage caused by improper maintenance can lead to costly repairs and may not be covered by the vehicle warranty. Maintenance intervals, checks, inspections, recommended fluids, and lubricants are important to keep the vehicle in good working condition.

The Tire Rotation and Required Services are the responsibility of the vehicle owner. It is recommended to have your dealer perform these services every 12 000 km/7,500 mi. Proper vehicle maintenance helps to keep the vehicle in good working condition, improves fuel economy, and reduces vehicle emissions.

Because of the way people use vehicles, maintenance needs vary. There may need to be more frequent checks and services. The Additional Required Services - Normal are for vehicles that:

- Carry passengers and cargo within recommended limits on the Tire and Loading Information label. See *Vehicle Load Limits* ⇨ *211*.
- Are driven on reasonable road surfaces within legal driving limits.
- Use the recommended fuel. See *Fuel* ⇨ *267*.

Refer to the information in the Maintenance Schedule Additional Required Services - Normal chart.

The Additional Required Services - Severe are for vehicles that are:

- Mainly driven in heavy city traffic in hot weather.
- Mainly driven in hilly or mountainous terrain.
- Frequently towing a trailer.
- Used for high speed or competitive driving.
- Used for taxi, police, or delivery service.

Refer to the information in the Maintenance Schedule Additional Required Services - Severe chart.

⚠ Warning

Object-ID=2549051 LMD=01-Dec-2010

Performing maintenance work can be dangerous and can cause serious injury. Perform maintenance work only if the required information, proper tools, and equipment are available. If they are not, see your dealer to have a trained technician do the work. See *Doing Your Own Service Work* ⇨ *279*.

Cadillac Premium Care Maintenance

Object-ID=4491050 Owner=Dobson, Bert
LMD=11-Apr-2016 LMB=Dobson, Bert

Your vehicle comes with the Cadillac Premium Care Maintenance. It is a maintenance program that covers select maintenance services during the first three years or 58 000 km (36,000 mi) whichever comes first.

Cadillac Premium Care Maintenance covers routine maintenance services, when scheduled in accordance with the owner manual, including:

- Oil changes based on the vehicle's oil life monitor system.
- Tire rotation every 12 000 km (7,500 mi).
- Passenger compartment air filter replacement.
- Multi-point vehicle inspection (MPVI) performed by a qualified technician.

Cadillac requires that all Cadillac Premium Care Maintenance services be performed by a Cadillac authorized service dealer.

Maintenance Schedule

Object-ID=4066898 Owner=Dobson, Bert
LMD=08-Apr-2016 LMB=Dobson, Bert

Owner Checks and Services

At Each Fuel Stop

- Check the engine oil level. See *Engine Oil* ⇨ *288*.

Once a Month

- Check the tire inflation pressures. See *Tire Pressure* ⇨ *325*.
- Inspect the tires for wear. See *Tire Inspection* ⇨ *331*.
- Check the windshield washer fluid level. See *Washer Fluid* ⇨ *300*.

Engine Oil Change

When the CHANGE ENGINE OIL SOON message displays, have the engine oil and filter changed within the next 1 000 km/600 mi. If driven under the best conditions, the engine oil life system may not indicate the need for vehicle service for up to a year. The engine oil and filter must be changed at least once a year and the oil life system must be reset. Your

Cadillac CTS/CTS-V Owner Manual (GMNA-Localizing-U.S./Canada-2ndPrint-11254870) - 2017 - Final Review - 6/14/16

trained dealer technician can perform this work. If the engine oil life system is reset accidentally, service the vehicle within 5 000 km/3,000 mi since the last service. Reset the oil life system when the oil is changed. See *Engine Oil Life System* ⇨ *291*.

Tire Rotation and Required Services Every 12 000 km/ 7,500 mi

Rotate the tires, if recommended for the vehicle, and perform the following services. See *Tire Rotation* ⇨ *331*.

- Check engine oil level and oil life percentage. If needed, change engine oil and filter, and reset oil life system. See *Engine Oil* ⇨ *288* and *Engine Oil Life System* ⇨ *291*.
- Check engine coolant level. See *Engine Coolant* ⇨ *296*.
- Check windshield washer fluid level. See *Washer Fluid* ⇨ *300*.
- Visually inspect windshield wiper blades for wear, cracking, or contamination. See *Exterior Care* ⇨ *353*. Replace worn or damaged wiper blades. See *CELL Link Error - Link target cell (cell ID 183279) is invalid for this publication.* ⇨ *#*.
- Check tire inflation pressures. See *Tire Pressure* ⇨ *325*.
- Inspect tire wear. See *Tire Inspection* ⇨ *331*.
- Visually check for fluid leaks.
- Inspect engine air cleaner filter. See *Engine Air Cleaner/Filter* ⇨ *292*.
- Inspect brake system. See *Exterior Care* ⇨ *353*.
- Visually inspect steering, suspension, and chassis components for damaged, loose, or missing parts or signs of wear. See *Exterior Care* ⇨ *353*.
- Check restraint system components. See *Safety System Check* ⇨ *75*.
- Visually inspect fuel system for damage or leaks.
- Visually inspect exhaust system and nearby heat shields for loose or damaged parts.
- Lubricate body components. See *Exterior Care* ⇨ *353*.
- Check starter switch. See *Starter Switch Check* ⇨ *305*.
- Check automatic transmission shift lock control function. See *Automatic Transmission Shift Lock Control Function Check* ⇨ *305*.
- Check parking brake and automatic transmission park mechanism. See *Park Brake and P (Park) Mechanism Check* ⇨ *306*.
- Check accelerator pedal for damage, high effort, or binding. Replace if needed.
- Visually inspect gas strut for signs of wear, cracks, or other damage. Check the hold open ability of the strut. See your dealer if service is required.
- Inspect sunroof track and seal, if equipped. See *Sunroof* ⇨ *55*.

Maintenance Schedule Additional Required Services - Normal	12 000 km/7,500 mi	24 000 km/15,000 mi	36 000 km/22,500 mi	48 000 km/30,000 mi	60 000 km/37,500 mi	72 000 km/45,000 mi	84 000 km/52,500 mi	96 000 km/60,000 mi	108 000 km/67,500 mi	120 000 km/75,000 mi	132 000 km/82,500 mi	144 000 km/90,000 mi	156 000 km/97,500 mi	168 000 km/105,000 mi	180 000 km/112,500 mi	192 000 km/120,000 mi	204 000 km/127,500 mi	216 000 km/135,000 mi	228 000 km/142,500 mi	240 000 km/150,000 mi
Rotate tires, if recommended for the vehicle, and perform Required Services. Check engine oil level and oil life percentage. Change engine oil and filter, if needed. (1)	✓	✓	✓	✓	✓	✓	✓	✓	✓	✓	✓	✓	✓	✓	✓	✓	✓	✓	✓	✓
Replace passenger compartment air filter. (2)			✓			✓			✓			✓			✓			✓		
Inspect evaporative control system. (3)						✓						✓						✓		
Replace engine air cleaner filter. (4)						✓						✓						✓		
Replace spark plugs. Inspect spark plug wires. (2.0L LTG and 3.6L LF3 Turbo Engines)								✓								✓				
Replace spark plugs. Inspect spark plug wires. (3.6L LGX and 6.2L LT4 Engines)													✓							
Change rear axle fluid, if equipped with electronic limited slip differential. (3.6L V6 Turbo LF3 and 6.2L V8 LT4 Engines only)						✓						✓						✓		
Drain and fill engine cooling system. (5)																				✓
Visually inspect accessory drive belts. (6)																				✓
Replace brake fluid. (7)																				

Footnotes — Maintenance Schedule Additional Required Services - Normal

(1) Vehicles with different size front and rear tires do not have tire rotation. See *Tire Rotation* ⇨ *331*.

(2) Or every two years, whichever comes first. More frequent passenger compartment air filter replacement may be needed if driving in areas with heavy traffic, poor air quality, high dust levels, or environmental

Cadillac CTS/CTS-V Owner Manual (GMNA-Localizing-U.S./Canada-2ndPrint-11254870) - 2017 - Final Review - 6/14/16

allergens. Passenger compartment air filter replacement may also be needed if there is reduced airflow, window fogging, or odors. Your GM dealer can help determine when to replace the filter.

(3) Visually check all fuel and vapor lines and hoses for proper attachment, connection, routing, and condition.

(4) Or every four years, whichever comes first. If driving in dusty conditions, inspect the filter at each oil change or more often as needed.

(5) Or every five years, whichever comes first. See *Cooling System* ⇨ *294*.

(6) Or every 10 years, whichever comes first. Inspect for fraying, excessive cracking, or damage; replace, if needed.

(7) Replace brake fluid every five years. See *Brake Fluid* ⇨ *302*.

Maintenance Schedule Additional Required Services - Severe	12 000 km/7,500 mi	24 000 km/15,000 mi	36 000 km/22,500 mi	48 000 km/30,000 mi	60 000 km/37,500 mi	72 000 km/45,000 mi	84 000 km/52,500 mi	96 000 km/60,000 mi	108 000 km/67,500 mi	120 000 km/75,000 mi	132 000 km/82,500 mi	144 000 km/90,000 mi	156 000 km/97,500 mi	168 000 km/105,000 mi	180 000 km/112,500 mi	192 000 km/120,000 mi	204 000 km/127,500 mi	216 000 km/135,000 mi	228 000 km/142,500 mi	240 000 km/150,000 mi
Rotate tires, if recommended for the vehicle, and perform Required Services. Check engine oil level and oil life percentage. Change engine oil and filter, if needed. (1)	✓	✓	✓	✓	✓	✓	✓	✓	✓	✓	✓	✓	✓	✓	✓	✓	✓	✓	✓	✓
Replace passenger compartment air filter. (2)			✓			✓			✓			✓			✓			✓		
Inspect evaporative control system. (3)						✓						✓						✓		
Replace engine air cleaner filter. (Except 6.2L V8 Engine) (4)						✓						✓						✓		
Replace engine air cleaner filter. (6.2L V8 Engine) (4)			✓			✓			✓			✓			✓			✓		
2.0L LTG and 3.6L LF3 Engines: Replace spark plugs. Inspect spark plug wires.								✓								✓				
3.6L LFX Engine Only: Replace spark plugs. Inspect spark plug wires.													✓							
Change automatic transmission fluid and filter.						✓						✓						✓		
Change transfer case fluid, if equipped with AWD. (5)						✓						✓						✓		
Change rear axle fluid.						✓						✓						✓		
Change front axle fluid, if equipped with AWD.						✓						✓						✓		
Drain and fill engine cooling system. (6)																				✓
Visually inspect accessory drive belts. (7)																				✓
Replace brake fluid. (8)																				

Cadillac CTS/CTS-V Owner Manual (GMNA-Localizing-U.S./Canada-2ndPrint-11254870) - 2017 - Final Review - 6/14/16

Footnotes — Maintenance Schedule Additional Required Services - Severe

(1) Vehicles with different size front and rear tires do not have tire rotation. See *Tire Rotation* ⇨ *331*.

(2) Or every two years, whichever comes first. More frequent passenger compartment air filter replacement may be needed if driving in areas with heavy traffic, poor air quality, high dust levels, or environmental allergens. Passenger compartment air filter replacement may also be needed if there is reduced airflow, window fogging, or odors. Your GM dealer can help determine when to replace the filter.

(3) Visually check all fuel and vapor lines and hoses for proper attachment, connection, routing, and condition.

(4) Or every four years, whichever comes first. If driving in dusty conditions, inspect the filter at each oil change or more often as needed.

(5) Do not directly power wash the transfer case output seals. High pressure water can overcome the seals and contaminate the transfer case fluid. Contaminated fluid will decrease the life of the transfer case and should be replaced.

(6) Or every five years, whichever comes first. See *Cooling System* ⇨ *294*.

(7) Or every 10 years, whichever comes first. Inspect for fraying, excessive cracking, or damage; replace, if needed.

(8) Replace brake fluid every five years. See *Brake Fluid* ⇨ *302*.

Special Application Services

Object-ID=2549336 Owner=Dobson, Bert LMD=09-Dec-2015 LMB=Dobson, Bert

- Severe Commercial Use Vehicles Only: Lubricate chassis components every oil change.
- Have underbody flushing service performed. See "Underbody Maintenance" in *Exterior Care* ⇨ *353*.

Additional Maintenance and Care

Object-ID=2549338 Owner=Dobson, Bert
LMD=09-Feb-2015 LMB=Dobson, Bert

Your vehicle is an important investment and caring for it properly may help to avoid future costly repairs. To maintain vehicle performance, additional maintenance services may be required.

It is recommended that your dealer perform these services — their trained dealer technicians know your vehicle best. Your dealer can also perform a thorough assessment with a multi-point inspection to recommend when your vehicle may need attention.

The following list is intended to explain the services and conditions to look for that may indicate services are required.

Battery

The 12-volt battery supplies power to start the engine and operate any additional electrical accessories.

- To avoid break-down or failure to start the vehicle, maintain a battery with full cranking power.
- Trained dealer technicians have the diagnostic equipment to test the battery and ensure that the connections and cables are corrosion-free.

Belts

- Belts may need replacing if they squeak or show signs of cracking or splitting.
- Trained dealer technicians have access to tools and equipment to inspect the belts and recommend adjustment or replacement when necessary.

Brakes

Brakes stop the vehicle and are crucial to safe driving.

- Signs of brake wear may include chirping, grinding, or squealing noises, or difficulty stopping.
- Trained dealer technicians have access to tools and equipment to inspect the brakes and recommend quality parts engineered for the vehicle.

Fluids

Proper fluid levels and approved fluids protect the vehicle's systems and components. See *Recommended Fluids and Lubricants* ⇨ *372* for GM approved fluids.

- Engine oil and windshield washer fluid levels should be checked at every fuel fill.
- Instrument cluster lights may come on to indicate that fluids may be low and need to be filled.

Hoses

Hoses transport fluids and should be regularly inspected to ensure that there are no cracks or leaks. With a multi-point inspection, your dealer can inspect the hoses and advise if replacement is needed.

Cadillac CTS/CTS-V Owner Manual (GMNA-Localizing-U.S./Canada-2ndPrint-11254870) - 2017 - Final Review - 6/14/16

Lamps

Properly working headlamps, taillamps, and brake lamps are important to see and be seen on the road.

- Signs that the headlamps need attention include dimming, failure to light, cracking, or damage. The brake lamps need to be checked periodically to ensure that they light when braking.
- With a multi-point inspection, your dealer can check the lamps and note any concerns.

Shocks and Struts

Shocks and struts help aid in control for a smoother ride.

- Signs of wear may include steering wheel vibration, bounce/sway while braking, longer stopping distance, or uneven tire wear.
- As part of the multi-point inspection, trained dealer technicians can visually inspect the shocks and struts for signs of leaking, blown seals, or damage, and can advise when service is needed.

Tires

Tires need to be properly inflated, rotated, and balanced. Maintaining the tires can save money and fuel, and can reduce the risk of tire failure.

- Signs that the tires need to be replaced include three or more visible treadwear indicators; cord or fabric showing through the rubber; cracks or cuts in the tread or sidewall; or a bulge or split in the tire.
- Trained dealer technicians can inspect and recommend the right tires. Your dealer can also provide tire/wheel balancing services to ensure smooth vehicle operation at all speeds. Your dealer sells and services name brand tires.

Vehicle Care

To help keep the vehicle looking like new, vehicle care products are available from your dealer. For information on how to clean and protect the vehicle's interior and exterior, see *Interior Care* ⇨ *358* and *Exterior Care* ⇨ *353*.

Wheel Alignment

Wheel alignment is critical for ensuring that the tires deliver optimal wear and performance.

- Signs that the alignment may need to be adjusted include pulling, improper vehicle handling, or unusual tire wear.
- Your dealer has the required equipment to ensure proper wheel alignment.

Windshield

For safety, appearance, and the best viewing, keep the windshield clean and clear.

- Signs of damage include scratches, cracks, and chips.
- Trained dealer technicians can inspect the windshield and recommend proper replacement if needed.

Wiper Blades

Wiper blades need to be cleaned and kept in good condition to provide a clear view.

- Signs of wear include streaking, skipping across the windshield, and worn or split rubber.
- Trained dealer technicians can check the wiper blades and replace them when needed.

Recommended Fluids, Lubricants, and Parts

Recommended Fluids and Lubricants

Object-ID=3950035 Owner=Dobson, Bert
LMD=01-Mar-2016 LMB=Dobson, Bert

Usage	Fluid/Lubricant
Automatic Transmission (Except w/ 3.6L LF3 Twin Turbo Engine)	DEXRON®-HP Automatic Transmission Fluid (GM Part No. 19331925, in Canada 19300537).
Automatic Transmission (w/3.6L LF3 Twin Turbo Engine)	ATF-WS Automatic Transmission Fluid (GM Part No. 88863400, in Canada 88863401).
Electronic Limited Slip Differential (eLSD) Clutch System Lubricant (CTS-V and V-Sport Only)	DEXRON®-VI Automatic Transmission Fluid.
Engine Coolant	50/50 mixture of clean, drinkable water and use only DEX-COOL® Coolant. See *Engine Coolant* ⇨ *296*.
Engine Oil	Engine oil meeting the dexos1™ specification of the proper SAE viscosity grade. ACDelco dexos1 Synthetic Blend is recommended. See *Engine Oil* ⇨ *288*.
Hood Latch Assembly, Secondary Latch, Pivots, Spring Anchor, and Release Pawl	Lubriplate Lubricant Aerosol (GM Part No. 89021668, in Canada 89021674) or lubricant meeting requirements of NLGI #2, Category LB or GC-LB.
Hydraulic Brake System	DOT 3 Hydraulic Brake Fluid (GM Part No. 19299818, in Canada 19299819).
Key Lock Cylinders, Hood and Door Hinges	Multi-Purpose Lubricant, Superlube (GM Part No. 12346241, in Canada 10953474).
Rear Axle/Front Axle (All-Wheel Drive)	SAE 75W-90 Synthetic Axle Lubricant (GM Part No. 88863089, in Canada 88863090) meeting GM Specification 9986285.
Rear Axle (Limited-Slip Differential)	SAE 75W-90 Synthetic Axle Lubricant (GM Part No. 88862624, in Canada 88862625) meeting GM Specification 9986290.
Rear Axle (Non-Limited Slip Differential)	SAE 75W-90 Synthetic Axle Lubricant (GM Part No. 88863089, in Canada 88863090) meeting GM Specification 9986285.

Usage	Fluid/Lubricant
Transfer Case (All-Wheel Drive)	Transfer Case Fluid (GM Part No. 88861950, in Canada 88861951).
Weatherstrip Conditioning	Weatherstrip Lubricant (GM Part No. 3634770, in Canada 10953518) or Dielectric Silicone Grease (GM Part No. 12345579, in Canada 10953481).
Windshield Washer	Automotive windshield washer fluid that meets regional freeze protection requirements.

Maintenance Replacement Parts

Object-ID=3981871 Owner=Cusenza, Mark
LMD=11-Apr-2016 LMB=Cusenza, Mark

Replacement parts identified below by name, part number, or specification can be obtained from your dealer.

Part	GM Part Number	ACDelco Part Number
Engine Air Cleaner/Filter		
2.0L L4 Engine	20857930	A3178C
3.6L V6 Engine (LGX)	20857930	A3178C
3.6L V6 Engine (LF3)	22844634	A3185C
6.2L V8 Engine (V-Series)	22935844	A3203C

Cadillac CTS/CTS-V Owner Manual (GMNA-Localizing-U.S./Canada-2ndPrint-11254870) - 2017 - Final Review - 6/14/16

Part	GM Part Number	ACDelco Part Number
Engine Oil Filter		
2.0L L4 Engine	12640445	PF64
3.6L V6 Engine (LGX)	19330000	PF63E
3.6L V6 Engine (LF3)	19330000	PF63E
6.2L V8 Engine (V-Series)	12640445	PF64
Passenger Compartment Air Filter	13508023	CF185
Spark Plugs		
2.0L L4 Engine	12647827	41-125
3.6L V6 Engine (LGX)	12646780	41-130
3.6L V6 Engine (LF3)	12642791	41-118
6.2L V8 Engine (V-Series)	12642722	41-128
Wiper Blades		
Driver Side – 60 cm (23.6 in)	23144358	—
Passenger Side – 45 cm (17.7 in)	23144359	—

Cadillac CTS/CTS-V Owner Manual (GMNA-Localizing-U.S./Canada-2ndPrint-11254870) - 2017 - Final Review - 6/14/16

Maintenance Records

Object-ID=2182105 Owner=Dobson, Bert
LMD=04-Aug-2014 LMB=Dobson, Bert

After the scheduled services are performed, record the date, odometer reading, who performed the service, and the type of services performed in the boxes provided. Retain all maintenance receipts.

Date	Odometer Reading	Serviced By	Maintenance Stamp	Services Performed

Cadillac CTS/CTS-V Owner Manual (GMNA-Localizing-U.S./Canada-2ndPrint-11254870) - 2017 - Final Review - 6/14/16

Date	Odometer Reading	Serviced By	Maintenance Stamp	Services Performed

Cadillac CTS/CTS-V Owner Manual (GMNA-Localizing-U.S./Canada-2ndPrint-11254870) - 2017 - Final Review - 6/14/16

Technical Data

Vehicle Identification
Vehicle Identification Number (VIN) 378
Service Parts Identification Label 378

Vehicle Data
Capacities and Specifications 379
Engine Drive Belt Routing 381

Vehicle Identification

Vehicle Identification Number (VIN)

Object-ID=4095315 Owner=Cusenza, Mark LMD=19-Apr-2016 LMB=Cusenza, Mark

4103721

This legal identifier is in the front corner of the instrument panel, on the driver side of the vehicle. It can be seen through the windshield from outside. The Vehicle Identification Number (VIN) also appears on the Vehicle Certification and Service Parts labels and certificates of title and registration.

Engine Identification

The eighth character in the VIN is the engine code. This code identifies the vehicle's engine, specifications, and replacement parts. See “Engine Specifications” under *Capacities and Specifications* ⇨ *379* for the vehicle's engine code.

Service Parts Identification Label

Object-ID=3808007 Owner=Cusenza, Mark LMD=22-Oct-2014 LMB=Dobson, Bert

This label, under the floor cover in the trunk on the passenger side, has the following information:

- Vehicle Identification Number (VIN).
- Model designation.
- Paint information.
- Production options and special equipment.

Do not remove this label from the vehicle.

Cadillac CTS/CTS-V Owner Manual (GMNA-Localizing-U.S./Canada-2ndPrint-11254870) - 2017 - Final Review - 6/14/16

Vehicle Data

Capacities and Specifications

Object-ID=4490932 Owner=Cusenza, Mark
LMD=11-Apr-2016 LMB=Cusenza, Mark

The following approximate capacities are given in metric and English conversions. See *Recommended Fluids and Lubricants* ⇨ *372* for more information.

Application	Capacities	
	Metric	**English**
Air Conditioning Refrigerant	For the air conditioning system refrigerant type and charge amount, see the refrigerant label under the hood. See your dealer for more information.	
Cooling System– Engine		
2.0L L4 Engine	8.8 L	9.3 qt
3.6L V6 Engine (LGX)	10.2 L	10.8 qt
3.6L V6 Engine (LF3)	12.8 L	13.5 qt
6.2L V8 Engine (V-Series)	12.2 L	12.9 qt

Application	Capacities	
	Metric	English
Engine Oil with Filter		
2.0L L4 Engine RWD	4.7 L	5.0 qt
2.0L L4 Engine AWD	5.7 L	6.0 qt
3.6L V6 Engine (LGX) RWD (without oil cooler)	5.2 L	5.5 qt
3.6L V6 Engine (LGX) RWD (with oil cooler)	5.7 L	6.0 qt
3.6L V6 Engine (LGX) AWD	6.15 L	6.5 qt
3.6L V6 Engine (LF3)	6.6 L	7.0 qt
6.2L V8 Engine (V-Series)	9.5 L	10.0 qt
Fuel Tank	72 L	19 gal
Transfer Case – AWD	0.8 L	0.8 qt
Rear Axle (with limited slip)	1.2 L	1.3 qt
Wheel Nut Torque	190 N•m	140 lb ft
All capacities are approximate. When adding, be sure to fill to the approximate level, as recommended in this manual. Recheck fluid level after filling.		

Cadillac CTS/CTS-V Owner Manual (GMNA-Localizing-U.S./Canada-2ndPrint-11254870) - 2017 - Final Review - 6/14/16

Engine Specifications

Engine	VIN Code	Transmission	Spark Plug Gap
2.0L L4 Engine (LTG)	X	Automatic	0.75–0.90 mm (0.030–0.035 in)
3.6L V6 Engine (LGX)	S	Automatic	0.80–0.90 mm (0.031–0.035 in)
3.6L V6 Engine (LF3)	8	Automatic	0.75–0.90 mm (0.030–0.035 in)
6.2L V8 Engine (V-Series)	6	Automatic	0.725–0.875 mm (0.029–0.034 in)

Engine Drive Belt Routing

Object-ID=4491101 Owner=Cusenza, Mark
LMD=11-Apr-2016 LMB=Cusenza, Mark

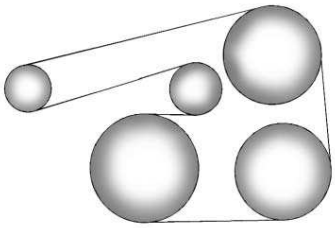

2.0L L4 Engine

2416911

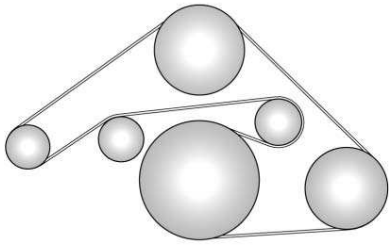

3.6L V6 Engine (LGX)

3987892

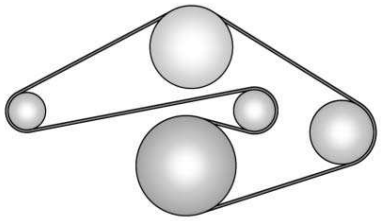

3.6L V6 Engine (LF3)

4491092

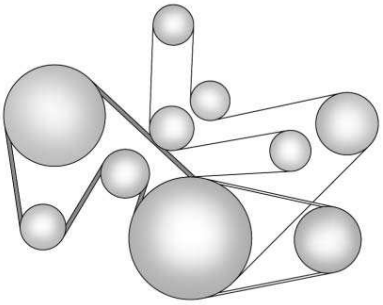

6.2L V8 Engine

4055234

Cadillac CTS/CTS-V Owner Manual (GMNA-Localizing-U.S./Canada-2ndPrint-11254870) - 2017 - Final Review - 6/14/16

Customer Information

Customer Information

Customer Satisfaction Procedure (US/CAN) 383
Customer Satisfaction Procedure (MEXICO) 385
Customer Assistance Offices (US/CAN) 386
Customer Assistance Offices (MEXICO) 386
Customer Assistance for Text Telephone (TTY) Users (US/CAN) 387
Online Owner Center (US/CAN) 387
Roadside Service (US/CAN) 388
Roadside Service (MEXICO) 390
Scheduling Service Appointments (US/CAN) 393
Courtesy Transportation Program (US/CAN) 393
Collision Damage Repair (US/CAN) 394
Service Publications Ordering Information (US/CAN) 396
Radio Frequency Statement (US/CAN) 397
Radio Frequency Statement (MEXICO) 397
Radio Frequency Statement (MEXICO1) 397

Reporting Safety Defects

Reporting Safety Defects to the United States Government (US/CAN) 398
Reporting Safety Defects to the Canadian Government (US/CAN) 398
Reporting Safety Defects to General Motors 399

Vehicle Data Recording and Privacy

Vehicle Data Recording and Privacy 399
Event Data Recorders 399
OnStar® 400
Infotainment System 400

Customer Information

Customer Satisfaction Procedure (US/CAN)

Object-ID=4296739 Owner=Smith, James
LMD=09-Jun-2016 LMB=Clark, Lorien

Your satisfaction and goodwill are important to your dealer and to Cadillac. Normally, any concerns with the sales transaction or the operation of the vehicle will be resolved by your dealer's sales or service departments. Sometimes, however, despite the best intentions of all concerned, misunderstandings can occur. If your concern has not been resolved to your satisfaction, the following steps should be taken:

STEP ONE : Discuss your concern with a member of dealership management. Normally, concerns can be quickly resolved at that level. If the matter has already been reviewed with the sales, service or parts manager, contact the owner of your dealership or the general manager.

STEP TWO : If after contacting a member of dealership management, it appears your concern cannot be resolved by your dealership without further help, in the U.S., call the Cadillac Customer Assistance Center at 1-800–458–8006. In Canada, call the Canadian Cadillac Customer Care Centre at 1-888-446-2000.

We encourage you to call the toll-free number in order to give your inquiry prompt attention. Have the following information available to give the Customer Assistance representative:

- Vehicle Identification Number (VIN). This is available from the vehicle registration or title, or the plate at the top left of the instrument panel and visible through the windshield.
- Dealership name and location.
- Vehicle delivery date and present mileage.

When contacting Cadillac, remember that your concern will likely be resolved at a dealer's facility. That is why we suggest following Step One first.

STEP THREE — U.S. Owners : Both General Motors and your dealer are committed to making sure you are completely satisfied with the new vehicle. However, if you continue to remain unsatisfied after following the procedure outlined in Steps One and Two, you can file with the Better Business Bureau (BBB) Auto Line® Program to enforce your rights.

The BBB Auto Line Program is an out-of-court program administered by the Council of Better Business Bureaus to settle automotive disputes regarding vehicle repairs or the interpretation of the New Vehicle Limited Warranty. Although you may be required to resort to this informal dispute resolution program prior to filing a court action, use of the program is free of charge and your case will generally be heard within 40 days. If you do not agree with the decision given in your case, you may reject it and proceed with any other venue for relief available to you.

You may contact the BBB Auto Line Program using the toll-free telephone number or write them at the following address:

BBB Auto Line Program
Council of Better Business Bureaus, Inc.
3033 Wilson Boulevard
Suite 600
Arlington, VA 22201

Telephone: 1-800-955-5100
http://www.bbb.org/council/programs-services/dispute-handling-and-resolution/bbb-auto-line

This program is available in all 50 states and the District of Columbia. Eligibility is limited by vehicle age, mileage, and other factors. General Motors reserves the right to change eligibility limitations and/or discontinue its participation in this program.

STEP THREE — Canadian Owners : In the event that you do not feel your concerns have been addressed after following the procedure outlined in Steps One and Two, General Motors of Canada Company wants you to be aware of its participation in a no-charge mediation/arbitration program. General Motors of Canada Company has committed to binding

arbitration of owner disputes involving factory-related vehicle service claims. The program provides for the review of the facts involved by an impartial third party arbiter, and may include an informal hearing before the arbiter. The program is designed so that the entire dispute settlement process, from the time you file your complaint to the final decision, should be completed in about 70 days. We believe our impartial program offers advantages over courts in most jurisdictions because it is informal, quick, and free of charge.

For further information concerning eligibility in the Canadian Motor Vehicle Arbitration Plan (CAMVAP), call toll-free 1-800-207-0685, or call the Cadillac Customer Care Centre, 1-888-446-2000, or write to:

General Motors Cadillac Customer Care Centre
General Motors of Canada Company
Mail Code: CA1-163-005
1908 Colonel Sam Drive
Oshawa, Ontario L1H 8P7

The inquiry should be accompanied by the Vehicle Identification Number (VIN).

Customer Satisfaction Procedure (MEXICO)

Object-ID=2427114 Owner=Smith, James
LMD=09-Jun-2016 LMB=Clark, Lorien

2427407

Did you get the Warranty Extension Plan? This plan is recommended by General Motors to supplement the warranty included with the new vehicle purchase.

See your dealer for details.

Customer Assistance Procedure

Owner satisfaction and goodwill are very important to your dealer and General Motors.

Normally, any problem with the transaction, sale, or usage of the vehicle must be handled by your dealer sales or service departments. However, we recognize that despite the good intentions of all parties involved, sometimes a misunderstanding may occur.

If you have a problem that has not been satisfactorily handled through the normal means, we suggest the following steps:

STEP ONE

Explain your case to your dealer service agent, service manager, dealer sales agent, or sales manager, depending on your case.

Make sure that they have all necessary information. They are interested in your continual satisfaction.

STEP TWO

If you are not satisfied, please contact the general manager or your dealership owner to ask for their help. If they are not able to resolve your

case, ask them to contact the right people at General Motors for support, if needed.

STEP THREE

If your case is not resolved in a reasonable amount of time by your dealer, please call the General Motors Customer Assistance Center (CAC) and provide the following information:

- Name
- Address
- Phone number
- Model year
- Brand
- Vehicle Identification Number (VIN)
- Mileage
- Delivery date
- Description of the problem
- Dealership name
- Dealership address

See *Customer Assistance Offices (US/CAN)* ⇨ *386* or *Customer Assistance Offices (MEXICO)* ⇨ *386*.

Customer Assistance Offices (US/CAN)

Object-ID=4296741 Owner=Smith, James LMD=09-Jun-2016 LMB=Clark, Lorien

Cadillac encourages customers to call the toll-free number for assistance. However, if a customer wishes to write or e-mail Cadillac, the letter should be addressed to:

United States and Puerto Rico

Cadillac Customer Assistance Center
Cadillac Motor Car Division
P.O. Box 33169
Detroit, MI 48232-5169
www.Cadillac.com

1-800-458-8006
1-800-833-2622 (For Text Telephone devices (TTYs))
Roadside Service: 1-800-224-1400

From U.S. Virgin Islands:

1-800-496-9994

Canada

General Motors of Canada Company
Cadillac Customer Care Centre, Mail Code: CA1-163-005
1908 Colonel Sam Drive
Oshawa, Ontario L1H 8P7
www.gm.ca

1-888-446-2000 (English/French)
Cadillac Roadside Service:
1-800-882-1112

Overseas

Contact the local General Motors Business Unit.

Customer Assistance Offices (MEXICO)

Object-ID=4334939 Owner=Smith, James LMD=09-Jun-2016 LMB=Clark, Lorien

To contact the Customer Assistance Center (CAC), use the phone numbers listed in this section. Customer assistance is available Monday through Friday, 08:00 to 20:00 hours, and Saturdays from 09:00 to 15:00 hours.

Cadillac CTS/CTS-V Owner Manual (GMNA-Localizing-U.S./Canada-2ndPrint-11254870) - 2017 - Final Review - 6/14/16

All e-mail inquiries to the Customer Assistance Center (CAC) should be sent to: cac.cadillac@gm.com.

Mexico

01-800-466-0805
01-800-212-234-5522

United States

1-866-466-8906

Canada

01-800-268-6800

Costa Rica

0-800-052-1646

Guatemala

1-800-835-0436

Panama

00-800-052-1479

Dominican Republic

1-888-760-1991

Nicaragua

00-1800-226-0510

Honduras

800-2791-9097

Other Central American and Caribbean Countries

52-722-2360680

Customer Assistance for Text Telephone (TTY) Users (US/CAN)

Object-ID=2202444 Owner=Smith, James
LMD=09-Jun-2016 LMB=Clark, Lorien

To assist customers who are deaf, hard of hearing, or speech-impaired and who use Text Telephones (TTYs), Cadillac has TTY equipment available at its Customer Assistance Center. Any TTY user can communicate with Cadillac by dialing: 1-800-833-2622. TTY users in Canada can dial 1-800-263-3830.

Online Owner Center (US/CAN)

Object-ID=2716677 Owner=Smith, James
LMD=09-Jun-2016 LMB=Clark, Lorien

Online Owner Experience (U.S.) my.cadillac.com

The Cadillac online owner experience allows interaction with Cadillac and keeps important vehicle-specific information in one place.

Membership Benefits

: Download owner manuals and view vehicle-specific how-to videos.

: View maintenance schedules, alerts, and OnStar onboard vehicle diagnostic information. Schedule service appointments.

: View printable dealer-recorded service records and self-recorded service records.

: Select a dealer and view locations, maps, phone numbers, and hours.

: Track your vehicle's warranty information.

Cadillac CTS/CTS-V Owner Manual (GMNA-Localizing-U.S./Canada-2ndPrint-11254870) - 2017 - Final Review - 6/14/16

: View active recalls or search by Vehicle Identification Number (VIN). See *Vehicle Identification Number (VIN)* ⇨ *378*.

: View GM Card, SiriusXM Satellite radio (if equipped), and OnStar account information.

: Chat with online help representatives.

See my.cadillac.com to register your vehicle.

Cadillac Owner Centre (Canada) cadillacowner.ca

Visit the Cadillac Owner Centre:

- Chat live with online help representatives.
- Locate owner resources such as lease-end, financing, and warranty information.
- Retrieve favorite articles, quizzes, tips, and multimedia galleries organized into the Featured Articles and Auto Care Sections.
- Download owner manuals.
- Find Cadillac-recommended maintenance services.

Roadside Service (US/CAN)

Object-ID=4083525 Owner=Smith, James
LMD=09-Jun-2016 LMB=Clark, Lorien

U.S.: 1-800-224-1400.

Canada: 1-800-882-1112.

Text Telephone (TTY) Users (U.S. Only): 1-888-889-2438.

Service is available 24 hours a day, 365 days a year.

Calling for Service

When calling Roadside Service, have the following information ready:

- Your name, home address, and home telephone number.
- Telephone number of your location.
- Location of the vehicle.
- Model, year, color, and license plate number of the vehicle.
- Odometer reading, Vehicle Identification Number (VIN), and delivery date of the vehicle.
- Description of the problem.

Coverage

Services are provided for the duration of the vehicle's powertrain warranty.

In the U.S., anyone driving the vehicle is covered. In Canada, a person driving the vehicle without permission from the owner is not covered.

Roadside Service is not a part of the New Vehicle Limited Warranty. General Motors North America and Cadillac reserve the right to make any changes or discontinue the Roadside Service program at any time without notification.

General Motors North America and Cadillac reserve the right to limit services or payment to an owner or driver if they decide the claims are made too often, or the same type of claim is made many times.

Cadillac Owner Privileges™

- **Emergency Fuel Delivery:** Delivery of enough fuel for the vehicle to get to the nearest service station.

- **Lock-Out Service:** Service to unlock the vehicle if you are locked out. A remote unlock may be available if you have OnStar. For security reasons, the driver must present identification before this service is given.
- **Emergency Tow from a Public Road or Highway:** Tow to the nearest Cadillac dealer for warranty service, or if the vehicle was in a crash and cannot be driven. Assistance is not given when the vehicle is stuck in the sand, mud, or snow.
- **Flat Tire Change:** Service to change a flat tire with a spare tire. The spare tire, if equipped, must be in good condition and properly inflated. It is your responsibility for the repair or replacement of the tire if it is not covered by the warranty.
- **Battery Jump Start:** Service to jump start a dead battery.
- **Trip Interruption Benefits and Service:** If your trip is interrupted due to a warranty failure, incidental expenses may be reimbursed during the Powertrain warranty period. Items considered are hotel, meals, and rental car or a vehicle being delivered back to the customer, up to 805 km (500 mi).

Cadillac Technician Roadside Service (U.S. Only)

Cadillac's exceptional Roadside Service is more than an auto club or towing service. It provides every Cadillac owner in the United States with the advantage of contacting a Cadillac advisor and, where available, a Cadillac trained dealer technician who can provide on-site service.

A dealer technician will travel to your location within a 30-mile radius of a participating Cadillac dealership. If beyond this radius, we will arrange to have your car towed to the nearest Cadillac dealership. Each technician travels with a specially equipped service vehicle complete with the necessary Cadillac parts and tools required to handle most roadside repairs.

Services Not Included in Roadside Service

- Impound towing caused by violation of any laws.
- Legal fines.
- Mounting, dismounting, or changing of snow tires, chains, or other traction devices.

Service is not provided if a vehicle is in an area that is not accessible to the service vehicle or is not a regularly traveled or maintained public road, which includes ice and winter roads. Off-road use is not covered.

Services Specific to Canadian-Purchased Vehicles

- **Fuel delivery:** Reimbursement is up to 7 liters. Diesel fuel delivery may be restricted. Propane and other fuels are not provided through this service.
- **Lock-Out Service:** Vehicle registration is required.
- **Trip Interruption Benefits and Service:** Pre-authorization, original detailed receipts, and a copy of the repair orders are required. Once

authorization has been received, the Roadside Service advisor will help you make arrangements and explain how to receive payment.

- **Alternative Service:** If assistance cannot be provided right away, the Roadside Service advisor may give you permission to get local emergency road service. You will receive payment, up to $100, after sending the original receipt to Roadside Service. Mechanical failures may be covered, however any cost for parts and labor for repairs not covered by the warranty are the owner responsibility.

Roadside Service (MEXICO)

Object-ID=4335551 Owner=Smith, James LMD=09-Jun-2016 LMB=Clark, Lorien

The Roadside Assistance program is not available for any of the countries in the Central American and Caribbean region.

As a new owner, your vehicle is automatically enrolled in the Roadside Assistance program. The services are available at no cost under the terms and conditions of the program. The Roadside Assistance program is not part of, or included, in the coverage provided by the new vehicle limited warranty.

Roadside Assistance provides assistance to the driver and passengers while driving the vehicle within your city of residence or on any passable road in Mexico, the United States, and Canada. Services are subject to the limitations described in the following pages. Program coverage varies by country.

Roadside Assistance is available 24 hours a day, 365 days of the year.

This program expires two years from the date of the invoice for the vehicle, regardless of vehicle mileage and changes in vehicle ownership.

For more information about the renewal of this program at the end of its term, contact the Cadillac Customer Assistance Center at 01-800-466-0805.

Services Provided

- **Flat Tire Change**: If unable to change a flat tire, Roadside Assistance will provide towing service to the nearest authorized Cadillac dealership. It is the owner's responsibility for the repair or replacement of the tire. This service is limited to the transfer of the vehicle to the repair facility.
- **Emergency Fuel Delivery**: Delivery of enough fuel for the vehicle to get to the nearest service station.
- **Lock-Out Service**: Service to unlock the vehicle if you are locked out. A remote unlock may be available if the vehicle has an active OnStar subscription. For security reasons, the driver must present identification before this service is provided.
- **Battery Jump Start**: Service to jump start a dead battery.
- ***Emergency Messages**: Transmission of urgent phone messages.

- ***Emergency Calls**: Call for emergency services.
- ***Dealership Location Assistance**: Information regarding addresses and telephone numbers for Cadillac dealers.
- **Emergency Towing**: Tow to the nearest dealer for warranty service if the vehicle cannot be driven.

  If the vehicle is involved in an accident during the commission of a crime, administrative violation, or breach of traffic regulations, Roadside Assistance will not provide service. When the vehicle is not accessible to be towed, all maneuvers required to access it will be at the owner's expense.

  If the vehicle is in another city outside of your residence, Roadside Assistance is limited to moving the vehicle to the nearest dealer. If you would like the vehicle moved to a different dealer, you will be asked to cover the difference in cost at the time of the move.

  If the vehicle cannot be received by the nearest Cadillac dealer due to scheduling conflicts, the vehicle will be taken to a safe place where it will remain for up to 48 hours until it can be taken to the dealer. If the storage costs exceed the amount authorized, the owner is responsible to pay the difference at the time of service. Contact Roadside Assistance for more information on authorized amounts.
- ***Trip Interruption**: This service is provided if you are prevented from further usage of your vehicle while traveling and it is not possible for the nearest Cadillac dealership to repair the vehicle the same day, requiring the vehicle to stay at the dealership for a night or more. If this happens, in addition to the previously listed services and prior to confirmation by the dealership, you are entitled to choose one of the following alternatives, within the limits of existing Roadside Assistance program guidelines. If the costs exceed the amount authorized for these services, you must pay the difference at the time of service.

  Roadside Assistance will coordinate hotel accommodations for all vehicle travelers for up to two nights.

  A rental car will be provided for up to two days and the vehicle must be returned to its original destination, excluding vehicles with a carrying capacity greater than 3.5 tons.

  Complimentary Transportation: If you prefer to continue your trip to the intended destination or return to your place of residence, and the trip requires more than eight hours driving on the road, transportation for the driver and passengers by first class bus or coach commercial airline will be provided to a location chosen by Roadside Assistance, depending on availability at the chosen destination. Restrictions apply based on vehicle specifications.

If you are on the road, taxi service to the nearest bus station or airport will be provided.

- ***Complimentary Transportation for Vehicle Pick Up**: Transportation to pick up your vehicle after repairs are complete. Once the dealer has reported that the vehicle has been repaired, Roadside Assistance will provide bus or commercial airline one-way service (subject to availability) for the person designated by you to collect your vehicle at the dealership's location if you or the designated person are not in the same town or city as the dealership.

*These services are not provided for U.S. or Canada residents. All services provided in the U.S. and Canada are at the owner's expense and will be reimbursed by Roadside Assistance.

Services Not Included in Roadside Assistance

Roadside Assistance does not cover or reimburse services for the following:

- Events caused by fraud or bad faith by the driver.
- Vehicle immobilization situations due to a major force or unforeseen circumstances, such as natural phenomena of an extraordinary nature, earthquakes, volcanic eruptions, and other cyclonic storms.
- Vehicle immobilization situations arising from car accidents caused by the driver of the vehicle or third parties. This means any occurrence that causes physical injury to the occupants and/or the vehicle caused by external forces.
- Acts of terrorism, riot or uproar, armed forces or police actions which prevent timely delivery of assistance services.
- Food service, beverages, telephone calls, or other extra costs. Accommodation costs apply only to Mexico per the terms and conditions of the Roadside Assistance program.
- Any damage to the vehicle without intent, derived from the services provided.
- Cost of towing a trailer when choosing a Cadillac dealer that is nearest to the temporary storage facility for the disabled vehicle.
- Cost of all maneuvers required to access the vehicle when it is not available to be towed.
- Cost of fuel provided.

Routine vehicle repair costs are not covered by the Roadside Assistance program. For more information, see your new vehicle warranty.

Contacting Roadside Assistance

Roadside Assistance services are of no cost to you and available 24 hours a day, 365 days a year. Costs are only incurred in situations that exceed the limits of the program, some of which are listed previously in this section.

To contact Roadside Assistance by phone, use the following numbers:

Mexico

01-800-466-0805

Cadillac CTS/CTS-V Owner Manual (GMNA-Localizing-U.S./Canada-2ndPrint-11254870) - 2017 - Final Review - 6/14/16

United States/Canada

1-800-882-1112

E-mail

asistencia.cadillac@gm.com

Cadillac reserves the right to make any changes or discontinue the Roadside Assistance program at any time without notification.

Scheduling Service Appointments (US/CAN)

Object-ID=2174556 Owner=Smith, James LMD=09-Jun-2016 LMB=Clark, Lorien

When the vehicle requires warranty service, contact your dealer and request an appointment. By scheduling a service appointment and advising the service consultant of your transportation needs, your dealer can help minimize your inconvenience.

If the vehicle cannot be scheduled into the service department immediately, keep driving it until it can be scheduled for service, unless, of course, the problem is safety related. If it is, please call your dealership, let them know this, and ask for instructions.

If your dealer requests you to bring the vehicle for service, you are urged to do so as early in the work day as possible to allow for same-day repair.

Courtesy Transportation Program (US/CAN)

Object-ID=2174558 Owner=Smith, James LMD=09-Jun-2016 LMB=Clark, Lorien

To enhance your ownership experience, we and our participating dealers are proud to offer Courtesy Transportation, a customer support program for vehicles with the Bumper-to-Bumper (Base Warranty Coverage period in Canada), extended powertrain, and/or hybrid-specific warranties in both the U.S. and Canada.

Several Courtesy Transportation options are available to assist in reducing inconvenience when warranty repairs are required.

Courtesy Transportation is not a part of the New Vehicle Limited Warranty. A separate booklet entitled “Limited Warranty and Owner Assistance Information” furnished with each new vehicle provides detailed warranty coverage information.

Transportation Options

Warranty service can generally be completed while you wait. However, if you are unable to do so, your dealer may offer the following transportation options:

Shuttle Service

This includes one-way or round-trip shuttle service within reasonable time and distance parameters of your dealer's area.

Public Transportation or Fuel Reimbursement

If overnight warranty repairs are needed, and public transportation is used, the expense must be supported by original receipts and within the maximum amount allowed by GM for shuttle service. If U.S. customers arrange their own transportation,

limited reimbursement for reasonable fuel expenses may be available. Claim amounts should reflect actual costs and be supported by original receipts. See your dealer for information.

Courtesy Rental Vehicle

For an overnight warranty repair, the dealer may provide an available courtesy rental vehicle or provide for reimbursement of a rental vehicle. Reimbursement is limited and must be supported by original receipts as well as a signed and completed rental agreement and meet state/provincial, local, and rental vehicle provider requirements. Requirements vary and may include minimum age requirements, insurance coverage, credit card, etc. Additional fees such as fuel usage charges, taxes, levies, usage fees, excessive mileage, or rental usage beyond the completion of the repair are also your responsibility.

It may not be possible to provide a like vehicle as a courtesy rental.

Additional Program Information

All program options, such as shuttle service, may not be available at every dealer. Contact your dealer for specific availability.

General Motors reserves the right to unilaterally modify, change, or discontinue Courtesy Transportation at any time and to resolve all questions of claim eligibility pursuant to the terms and conditions described herein at its sole discretion.

Collision Damage Repair (US/CAN)

Object-ID=2394073 Owner=Smith, James LMD=09-Jun-2016 LMB=Clark, Lorien

If the vehicle is involved in a collision and it is damaged, have the damage repaired by a qualified technician using the proper equipment and quality replacement parts. Poorly performed collision repairs diminish the vehicle resale value, and safety performance can be compromised in subsequent collisions.

Collision Parts

Genuine GM Collision parts are new parts made with the same materials and construction methods as the parts with which the vehicle was originally built. Genuine GM Collision parts are the best choice to ensure that the vehicle's designed appearance, durability, and safety are preserved. The use of Genuine GM parts can help maintain the GM New Vehicle Limited Warranty.

Recycled original equipment parts may also be used for repair. These parts are typically removed from vehicles that were total losses in prior crashes. In most cases, the parts being recycled are from undamaged sections of the vehicle. A recycled original equipment GM part may be an acceptable choice to maintain the vehicle's originally designed appearance and safety performance; however, the history of these parts is not known. Such parts are not covered by the GM New Vehicle Limited Warranty, and any related failures are not covered by that warranty.

Cadillac CTS/CTS-V Owner Manual (GMNA-Localizing-U.S./Canada-2ndPrint-11254870) - 2017 - Final Review - 6/14/16

Aftermarket collision parts are also available. These are made by companies other than GM and may not have been tested for the vehicle. As a result, these parts may fit poorly, exhibit premature durability/corrosion problems, and may not perform properly in subsequent collisions. Aftermarket parts are not covered by the GM New Vehicle Limited Warranty, and any vehicle failure related to such parts is not covered by that warranty.

Repair Facility

GM also recommends that you choose a collision repair facility that meets your needs before you ever need collision repairs. Your dealer may have a collision repair center with GM-trained technicians and state-of-the-art equipment, or be able to recommend a collision repair center that has GM-trained technicians and comparable equipment.

Insuring the Vehicle

Protect your investment in the GM vehicle with comprehensive and collision insurance coverage. There are significant differences in the quality of coverage afforded by various insurance policy terms. Many insurance policies provide reduced protection to the GM vehicle by limiting compensation for damage repairs by using aftermarket collision parts. Some insurance companies will not specify aftermarket collision parts. When purchasing insurance, we recommend that you ensure that the vehicle will be repaired with GM original equipment collision parts. If such insurance coverage is not available from your current insurance carrier, consider switching to another insurance carrier.

If the vehicle is leased, the leasing company may require you to have insurance that ensures repairs with Genuine GM Original Equipment Manufacturer (OEM) parts or Genuine Manufacturer replacement parts. Read the lease carefully, as you may be charged at the end of the lease for poor quality repairs.

If a Crash Occurs

If there has been an injury, call emergency services for help. Do not leave the scene of a crash until all matters have been taken care of. Move the vehicle only if its position puts you in danger, or you are instructed to move it by a police officer.

Give only the necessary information to police and other parties involved in the crash.

For emergency towing see *Roadside Service (US/CAN)* ⇨ *388* or *Roadside Service (MEXICO)* ⇨ *390*.

Gather the following information:

- Driver name, address, and telephone number.
- Driver license number.
- Owner name, address, and telephone number.
- Vehicle license plate number.
- Vehicle make, model, and model year.
- Vehicle Identification Number (VIN).

- Insurance company and policy number.
- General description of the damage to the other vehicle.

Choose a reputable repair facility that uses quality replacement parts. See "Collision Parts" earlier in this section.

If the airbag has inflated, see *What Will You See after an Airbag Inflates?* ⇨ *81*.

Managing the Vehicle Damage Repair Process

In the event that the vehicle requires damage repairs, GM recommends that you take an active role in its repair. If you have a pre-determined repair facility of choice, take the vehicle there, or have it towed there. Specify to the facility that any required replacement collision parts be original equipment parts, either new Genuine GM parts or recycled original GM parts. Remember, recycled parts will not be covered by the GM vehicle warranty.

Insurance pays the bill for the repair, but you must live with the repair. Depending on your policy limits, your insurance company may initially value the repair using aftermarket parts. Discuss this with the repair professional, and insist on Genuine GM parts. Remember, if the vehicle is leased, you may be obligated to have the vehicle repaired with Genuine GM parts, even if your insurance coverage does not pay the full cost.

If another party's insurance company is paying for the repairs, you are not obligated to accept a repair valuation based on that insurance company's collision policy repair limits, as you have no contractual limits with that company. In such cases, you can have control of the repair and parts choices as long as the cost stays within reasonable limits.

Service Publications Ordering Information (US/CAN)

Object-ID=2361378 Owner=Smith, James LMD=09-Jun-2016 LMB=Clark, Lorien

Service Manuals

Service Manuals have the diagnosis and repair information on the engines, transmission, axle, suspension, brakes, electrical, steering, body, etc.

Owner Information

Owner publications are written specifically for owners and intended to provide basic operational information about the vehicle. The Owner Manual includes the Maintenance Schedule for all models.

In-Portfolio: Includes a Portfolio, Owner Manual, and Warranty Manual.

RETAIL SELL PRICE: $35.00 – $40.00 (U.S.) plus handling and shipping fees.

Without Pouch: Owner Manual only.

RETAIL SELL PRICE: $25.00 (U.S.) plus handling and shipping fees.

Current and Past Models

Service and Owner publications are available for many current and past model year GM vehicles.

ORDER TOLL FREE: 1-800-551-4123
Monday – Friday 8:00 AM – 6:00 PM Eastern Time

For Credit Card Orders Only (VISA-MasterCard-Discover), see Helm, Inc. at: www.helminc.com.

Or write to:

Helm, Incorporated
Attention: Customer Service
47911 Halyard Drive
Plymouth, MI 48170

Prices are subject to change without notice and without incurring obligation. Allow ample time for delivery.

All listed prices are quoted in U.S. funds. Make checks payable in U.S. funds.

Radio Frequency Statement (US/CAN)

Object-ID=2176792 Owner=Smith, James LMD=09-Jun-2016 LMB=Clark, Lorien

This vehicle has systems that operate on a radio frequency that complies with Part 15/Part 18 of the Federal Communications Commission (FCC) rules and with Industry Canada Standards RSS-GEN/210/216/220/251/310, ICES-001.

Operation is subject to the following two conditions:

1. The device may not cause harmful interference.
2. The device must accept any interference received, including interference that may cause undesired operation of the device.

Changes or modifications to any of these systems by other than an authorized service facility could void authorization to use this equipment.

Radio Frequency Statement (MEXICO)

Object-ID=4433265 Owner=Smith, James LMD=09-Jun-2016 LMB=Clark, Lorien

This vehicle has systems that operate on a radio frequency that complies with NOM-EM-016-SCFI-2015 requirements.

Operation of this equipment is subject to the following two conditions:

1. This equipment or device may not cause harmful interference.
2. This equipment or device must accept any interference received, including interference that may cause undesired operation.

Radio Frequency Statement (MEXICO1)

Object-ID=3617940 Owner=Smith, James LMD=09-Jun-2016 LMB=Clark, Lorien

Long Range Radar

Certificate of homologation: RVLCOAR10-0980

Continental ARS3-A

This equipment operates on a secondary system level, consequently, must accept harmful interference, including teams from the same class and can not cause interference to systems operating a first level.

Reporting Safety Defects

Reporting Safety Defects to the United States Government (US/CAN)

Object-ID=2170484 Owner=Smith, James LMD=09-Jun-2016 LMB=Clark, Lorien

If you believe that your vehicle has a defect which could cause a crash or could cause injury or death, you should immediately inform the National Highway Traffic Safety Administration (NHTSA) in addition to notifying General Motors.

If NHTSA receives similar complaints, it may open an investigation, and if it finds that a safety defect exists in a group of vehicles, it may order a recall and remedy campaign. However, NHTSA cannot become involved in individual problems between you, your dealer, or General Motors.

To contact NHTSA, you may call the Vehicle Safety Hotline toll-free at 1-888-327-4236 (TTY: 1-800-424-9153); go to *http://www.safercar.gov;* or write to:

Administrator, NHTSA
1200 New Jersey Avenue, S.E.
Washington, D.C. 20590

You can also obtain other information about motor vehicle safety from *http://www.safercar.gov.*

Reporting Safety Defects to the Canadian Government (US/CAN)

Object-ID=4296517 Owner=Smith, James LMD=09-Jun-2016 LMB=Clark, Lorien

If you live in Canada, and you believe that the vehicle has a safety defect, notify Transport Canada immediately, and notify General Motors of Canada Company. Call Transport Canada at 1-800-333-0510 or write to:

Cadillac CTS/CTS-V Owner Manual (GMNA-Localizing-U.S./Canada-2ndPrint-11254870) - 2017 - Final Review - 6/14/16

Transport Canada
Road Safety Branch
80 rue Noel
Gatineau, QC J8Z 0A1

Reporting Safety Defects to General Motors

Object-ID=4296748 Owner=Smith, James
LMD=09-Jun-2016 LMB=Clark, Lorien

In addition to notifying NHTSA (or Transport Canada) in a situation like this, notify General Motors.

Call 1-800-458-8006, or write:

Cadillac Customer Assistance Center
Cadillac Motor Car Division
P.O. Box 33169
Detroit, MI 48232-5169

In Canada, call 1-888-446-2000, or write:

Canadian Cadillac Customer Care Centre, Mail Code: CA1-163-005
General Motors of Canada Company
1908 Colonel Sam Drive
Oshawa, Ontario L1H 8P7

Vehicle Data Recording and Privacy

Object-ID=2715072 Owner=Smith, James
LMD=09-Jun-2016 LMB=Clark, Lorien

The vehicle has a number of computers that record information about the vehicle's performance and how it is driven. For example, the vehicle uses computer modules to monitor and control engine and transmission performance, to monitor the conditions for airbag deployment and deploy them in a crash, and, if equipped, to provide antilock braking to help the driver control the vehicle. These modules may store data to help the dealer technician service the vehicle. Some modules may also store data about how the vehicle is operated, such as rate of fuel consumption or average speed. These modules may retain personal preferences, such as radio presets, seat positions, and temperature settings.

Event Data Recorders

Object-ID=2715181 Owner=Smith, James
LMD=09-Jun-2016 LMB=Clark, Lorien

This vehicle is equipped with an event data recorder (EDR). The main purpose of an EDR is to record, in certain crash or near crash-like situations, such as an air bag deployment or hitting a road obstacle, data that will assist in understanding how a vehicle's systems performed. The EDR is designed to record data related to vehicle dynamics and safety systems for a short period of time, typically 30 seconds or less. The EDR in this vehicle is designed to record such data as:

- How various systems in your vehicle were operating;
- Whether or not the driver and passenger safety belts were buckled/fastened;
- How far (if at all) the driver was depressing the accelerator and/or brake pedal; and,
- How fast the vehicle was traveling.

These data can help provide a better understanding of the circumstances in which crashes and injuries occur.

Note

EDR data are recorded by your vehicle only if a non-trivial crash situation occurs; no data are recorded by the EDR under normal driving conditions and no personal data (e.g., name, gender, age, and crash location) are recorded. However, other parties, such as law enforcement, could combine the EDR data with the type of personally identifying data routinely acquired during a crash investigation.

To read data recorded by an EDR, special equipment is required, and access to the vehicle or the EDR is needed. In addition to the vehicle manufacturer, other parties, such as law enforcement, that have the special equipment, can read the information if they have access to the vehicle or the EDR.

GM will not access these data or share it with others except: with the consent of the vehicle owner or, if the vehicle is leased, with the consent of the lessee; in response to an official request by police or similar government office; as part of GM's defense of litigation through the discovery process; or, as required by law. Data that GM collects or receives may also be used for GM research needs or may be made available to others for research purposes, where a need is shown and the data is not tied to a specific vehicle or vehicle owner.

OnStar®

Object-ID=2715076 Owner=Smith, James LMD=09-Jun-2016 LMB=Clark, Lorien

If the vehicle is equipped with OnStar® and has an active subscription, additional data may be collected through the OnStar system. This includes information about the vehicle's operation; collisions involving the vehicle; the use of the vehicle and its features; and, in certain situations, the location and approximate GPS speed of the vehicle. Refer to the OnStar Terms and Conditions and Privacy Statement on the OnStar website.

See *OnStar Additional Information (MEXICO)* ⇨ *413* or *OnStar Additional Information (US/CAN)* ⇨ *409*.

Infotainment System

Object-ID=2768207 Owner=Smith, James LMD=09-Jun-2016 LMB=Clark, Lorien

If the vehicle is equipped with a navigation system as part of the infotainment system, use of the system may result in the storage of destinations, addresses, telephone numbers, and other trip information. See the infotainment manual for information on stored data and for deletion instructions.

Cadillac CTS/CTS-V Owner Manual (GMNA-Localizing-U.S./Canada-2ndPrint-11254870) - 2017 - Final Review - 6/14/16

OnStar

OnStar Overview
OnStar Overview (US/CAN) 401
OnStar Overview (MEXICO) 402

OnStar Services
Emergency (US/CAN) 403
Emergency (MEXICO) 403
Security (US/CAN) 403
Security (MEXICO) 404
Navigation (US/CAN) 404
Navigation (MEXICO) 405
Connections (US/CAN) 406
Connectivity (MEXICO) 408
Diagnostics (US/CAN) 408
Diagnostics (MEXICO) 408

OnStar Additional Information
OnStar Additional Information (US/CAN) 409
OnStar Additional Information (MEXICO) 413

OnStar Overview

OnStar Overview (US/CAN)

Object-ID=4290836 Owner=Szydlowski, Corinna
LMD=22-Oct-2015 LMB=Szydlowski, Corinna

2747093

Voice Command Button

Blue OnStar Button

Red Emergency Button

This vehicle may be equipped with a comprehensive, in-vehicle system that can connect to an OnStar Advisor for Emergency, Security, Navigation, Connections, and Diagnostics Services. OnStar services may require a paid subscription and data plan. OnStar requires the vehicle battery and electrical system, cellular service, and GPS satellite signals to be available and operating. OnStar acts as a link to existing emergency service providers.

OnStar may collect information about you and your vehicle, including location information. See OnStar User Terms, Privacy Statement, and Software Terms for more details including system limitations at www.onstar.com (U.S.) or www.onstar.ca (Canada).

The OnStar system status light is next to the OnStar buttons. If the status light is:

- Solid Green: System is ready.
- Flashing Green: On a call.
- Red: Indicates a problem.
- Off: System is active. Press twice to speak with an OnStar Advisor.

Press or call 1-888-4ONSTAR (1-888-466-7827) to speak to an Advisor.

Press to:

- Make a call, end a call, or answer an incoming call.
- Give OnStar Hands-Free Calling voice commands.

- Give OnStar Turn-by-Turn Navigation voice commands.
- Obtain and customize the Wi-Fi® hotspot name or SSID and password, if equipped.

Press On to connect to an Advisor to:

- Verify account information or update contact information.
- Get driving directions.
- Receive a Diagnostic check of the vehicle's key operating systems.
- Receive Roadside Assistance.
- Manage Wi-Fi Settings, if equipped.

Press SOS to get a priority connection to an OnStar Advisor available 24/7 to:

- Get help for an emergency.
- Be a Good Samaritan or respond to an AMBER Alert.
- Get assistance in severe weather or other crisis situations and find evacuation routes.

OnStar Overview (MEXICO)

Object-ID=3959737 Owner=Szydlowski, Corinna LMD=17-Mar-2015 LMB=Szydlowski, Corinna

If equipped, this vehicle has a comprehensive, in-vehicle system that can connect to an OnStar Advisor for Emergency, Security, Navigation, Connectivity, and Diagnostics Services.

2747093

Voice Command Button

Blue OnStar Button

Emergency Button

This manual describes OnStar´s functions, which may or may not be on the vehicle because of optional equipment that was not purchased on the vehicle, model variants, country specifications, or features/applications that may not be available in your region, or changes subsequent to the printing of this owner manual.

Refer to the purchase documentation relating to your specific vehicle to confirm the functions.

The OnStar system is not available in any of the countries of the Central America and Caribbean region.

The OnStar system status light is next to the OnStar buttons. If the status light is:

- Solid Green: System is ready.
- Flashing Green: On a call.
- Red: Indicates a problem.

Press On or call 01-800-083-4994 to speak to an Advisor.

Press to give OnStar Turn-by-Turn Navigation voice commands. This requires the OnStar Connect Plus service.

Press On to connect to an Advisor to:

- Verify account information or update contact information.

- Get driving directions. Requires the OnStar Connect Plus service.
- Receive an On-Demand Diagnostics check of the vehicle's key operating systems.
- Receive Roadside Assistance.

Press SOS to get a priority connection to an Advisor available 24/7 to:

- Get help in an emergency.
- Be a Good Citizen and contact an Advisor to help someone else in need.
- Get assistance in severe weather or other crisis situations and find evacuation routes.

OnStar Services

Emergency (US/CAN)

Object-ID=4290853 Owner=Szydlowski, Corinna LMD=22-Oct-2015 LMB=Szydlowski, Corinna

Emergency Services require an active, OnStar service plan (excludes Basic Plan). With Automatic Crash Response, built-in sensors can automatically alert a specially trained OnStar Advisor who is immediately connected in to the vehicle to help.

Press SOS for a priority connection to an OnStar Advisor who can contact emergency service providers, direct them to your exact location, and relay important information.

With OnStar Crisis Assist, specially trained Advisors are available 24 hours a day, 7 days a week, to provide a central point of contact, assistance, and information during a crisis.

With Roadside Assistance, Advisors can locate a nearby service provider to help with a flat tire, a battery jump, or an empty gas tank.

Emergency (MEXICO)

Object-ID=3959754 Owner=Szydlowski, Corinna LMD=16-Mar-2015 LMB=Szydlowski, Corinna

With Automatic Crash Response, in many crashes, built-in sensors can automatically alert a specially trained OnStar Advisor who is immediately connected to the vehicle to help.

Press SOS for a priority connection to an OnStar Advisor who can contact emergency service providers, direct them to your exact location, and relay important information.

With OnStar Crisis Assist, specially trained Advisors are available 24 hours a day, 7 days a week, to provide a central point of contact, assistance, and information during a crisis.

Security (US/CAN)

Object-ID=4290889 Owner=Szydlowski, Corinna LMD=22-Oct-2015 LMB=Szydlowski, Corinna

If equipped, OnStar provides these services:

- With Stolen Vehicle Assistance, OnStar Advisors can use GPS to pinpoint the vehicle and help authorities quickly recover it.
- With Remote Ignition Block™, if equipped, OnStar can block the engine from being restarted.
- With Stolen Vehicle Slowdown®, if equipped, OnStar can work with law enforcement to gradually slow the vehicle down.

Theft Alarm Notification

If equipped, if the doors are locked and the vehicle alarm sounds, a notification by text, e-mail, or phone call will be sent. If the vehicle is stolen, an OnStar Advisor can work with authorities to recover the vehicle.

Security (MEXICO)

Object-ID=4213525 Owner=Szydlowski, Corinna LMD=10-Aug-2015 LMB=Szydlowski, Corinna

If equipped, OnStar provides these services:

- With Roadside Assistance, Advisors can locate a nearby service provider to help with a flat tire, a battery jump, or an empty gas tank.
- With Stolen Vehicle Assistance, OnStar advisors can use GPS to pinpoint the vehicle and help authorities quickly recover it.
- With Remote Ignition Block if equipped, OnStar can block the engine from being started.
- With Stolen Vehicle Slowdown, if equipped, OnStar can work with law enforcement to gradually slow the vehicle down.

Navigation (US/CAN)

Object-ID=4290902 Owner=Szydlowski, Corinna LMD=22-Oct-2015 LMB=Szydlowski, Corinna

OnStar navigation requires a specific OnStar service plan.

Press On to receive Turn-by-Turn directions or have them sent to the vehicle's navigation screen, if equipped.

Turn-by-Turn Navigation

1. Press On to connect to an Advisor.
2. Request directions to be downloaded to the vehicle.
3. Follow the voice-guided commands.

Using Voice Commands During a Planned Route

Cancel Route

1. Press . System responds: "OnStar ready," then a tone.
2. Say "Cancel route." System responds: "Do you want to cancel directions?"
3. Say "Yes." System responds: "OK, request completed, thank you, goodbye."

Route Preview

1. Press . System responds: "OnStar ready," then a tone.
2. Say "Route preview." System responds with the next three maneuvers.

Repeat

1. Press . System responds: “OnStar ready,” then a tone.
2. Say “Repeat.” System responds with the last direction given, then responds with “OnStar ready,” then a tone.

Get My Destination

1. Press . System responds: “OnStar ready,” then a tone.
2. Say “Get my destination.” System responds with the address and distance to the destination, then responds with “OnStar ready,” then a tone.

Send Destination to Vehicle

Subscribers can have directions sent to the vehicle’s navigation screen, if equipped.

Press , then ask the Advisor to download directions to the vehicle’s navigation system, if equipped. After the call ends, the navigation screen will provide prompts to begin driving directions. Routes that are sent to the navigation screen can only be canceled through the navigation system.

See www.onstar.com (U.S.) or www.onstar.ca (Canada).

Navigation (MEXICO)

Object-ID=3959768 Owner=Szydlowski, Corinna LMD=17-Mar-2015 LMB=Szydlowski, Corinna

OnStar navigation requires the OnStar Connect Plus service plan.

Press to receive Turn-by-Turn directions or have them sent to the vehicle’s navigation screen, if equipped. The OnStar mapping database is continuously updated. For coverage maps, see www.onstar.com.mx.

Turn-by-Turn Navigation

1. Press to connect to an Advisor.
2. Request directions to be downloaded to the vehicle.
3. Follow the voice-guided commands.

Using Voice Commands During a Planned Route

Cancel Route

1. Press . System responds: “OnStar ready,” then a tone.
2. Say “Cancel route.” System responds: “Do you want to cancel directions?”
3. Say “Yes.” System responds: “Yes. OK route canceled, thank you, goodbye.”

Route Preview

1. Press . System responds: “OnStar ready,” then a tone.
2. Say “Route preview.” System responds with the next three maneuvers.

Repeat

1. Press . System responds: “OnStar ready,” then a tone.
2. Say "Repeat." System responds with the last direction given, then responds with "Thank you, goodbye."

Get My Destination

1. Press . System responds: "OnStar ready," then a tone.
2. Say "Get my destination." System responds with the address and distance to the destination, then responds with "OnStar ready," then a tone.

Other Navigation Services Available from OnStar

Destination Download

Subscribers can have directions sent to the vehicle's navigation screen, if equipped.

Press , then ask the Advisor to download directions to the vehicle's navigation system, if equipped. After the call ends, press the Go button on the navigation screen to begin driving directions. Routes that are sent to the navigation screen can only be canceled through the navigation screen.

For information about Destination Download, and coverage maps, see www.onstar.com.mx.

Connections (US/CAN)

Object-ID=4290905 Owner=Szydlowski, Corinna LMD=10-Dec-2015 LMB=Szydlowski, Corinna

The following OnStar services help with staying connected.

For coverage maps, see www.onstar.com (U.S.) or www.onstar.ca (Canada).

Ensuring Security

- Change the default passwords for the Wi-Fi hotspot and RemoteLink mobile application. Make these passwords different from each other and use a combination of letters, numbers, and symbols to increase the security.
- Change the default name of the SSID (Service Set Identifier). This is your network's name that is visible to other wireless devices. Choose a unique name and avoid family names or vehicle descriptions.

OnStar Wi-Fi® Hotspot (If Equipped)

The vehicle may have a built-in Wi-Fi hotspot that provides access to the Internet and web content at 4G LTE speed. Up to seven mobile devices can be connected. A data plan is required. Use the in-vehicle controls only when it is safe to do so.

1. To retrieve Wi-Fi hotspot information, press , wait for the prompt, then say "Wi-Fi settings." On some vehicles, touch Wi-Fi Settings on the screen.
2. The Wi-Fi settings will display the Wi-Fi hotspot name (SSID), password, and on some vehicles, the connection type (no Internet connection, 3G, 4G, 4G LTE), and signal quality (poor, good, excellent).
3. To change the SSID or password, press or call 1-888-4ONSTAR to connect with an Advisor.

After initial set-up, your vehicle's Wi-Fi hotspot will connect automatically to your mobile devices. Manage data usage by turning Wi-Fi on or off on your mobile device, using the RemoteLink mobile app, or by contacting an OnStar Advisor.

Cadillac CTS/CTS-V Owner Manual (GMNA-Localizing-U.S./Canada-2ndPrint-11254870) - 2017 - Final Review - 6/14/16

OnStar RemoteLink® Mobile App (If Equipped)

Download the OnStar RemoteLink mobile app to select Apple® iOS, Android™, BlackBerry®, or Windows® mobile devices. OnStar Subscribers can access the following services from a mobile device:

- Remotely start/stop the vehicle, if factory-equipped.
- Lock/unlock doors, if equipped with automatic locks.
- Activate the horn and lamps.
- Check the vehicle's fuel level, oil life, or tire pressure, if factory-equipped with the Tire Pressure Monitor System.
- Send directions to the vehicle.
- Locate the vehicle on a map (U.S. market only).
- Turn the vehicle's Wi-Fi hotspot on/off, manage settings, and monitor data consumption, if equipped.

For OnStar RemoteLink information and compatibility, see www.onstar.com (U.S.) or www.onstar.ca (Canada).

Remote Services

Contact an OnStar Advisor to unlock the doors or sound the horn and flash the lamps.

OnStar AtYourService

OnStar Advisors can provide offers from restaurants and retailers on your route, help locate hotels, or book a room. These services vary by market.

OnStar Hands-Free Calling

Make and receive calls with the built-in wireless calling service, which requires available minutes.

Make a Call

1. Press . System responds: "OnStar ready."
2. Say "Call." System responds: "Call. Please say the name or number to call."
3. Say the entire number without pausing, including a "1" and the area code. System responds: "OK, calling."

Calling 911 Emergency

1. Press . System responds: "OnStar ready."
2. Say "Call." System responds: "Call. Please say the name or number to call."
3. Say "911" without pausing. System responds: "911."
4. Say "Call." System responds: "OK, dialing 911."

Retrieve My Number

1. Press . System responds: "OnStar ready."
2. Say "My number." System responds: "Your OnStar Hands-Free Calling number is," then says the number.

End a Call

Press . System responds: "Call ended."

Verify Minutes and Expiration

Press and say "Minutes" then "Verify" to check how many minutes remain and their expiration date.

Connectivity (MEXICO)

Object-ID=4213526 Owner=Szydlowski, Corinna LMD=10-Aug-2015 LMB=Szydlowski, Corinna

The following OnStar services help with staying connected.

For coverage maps, see www.onstar.com.mx

OnStar RemoteLink® Mobile App (If Equipped)

Download the OnStar RemoteLink mobile app from iTunes® App Store, GooglePlay for Android™, BlackBerry App World™, or Windows App store. OnStar Subscribers can access the following services from a mobile device:

- Remotely start/stop the vehicle, if factory-equipped.
- Lock/unlock doors, if equipped with automatic locks, or activate the horn and lamps.
- Check the vehicle's fuel level, oil life, or tire pressure, if factory-equipped with the Tire Pressure Monitor System.

For OnStar RemoteLink information and compatibility, see www.onstar.com.mx.

Calling 066 Emergency

1. Press . System responds: "OnStar ready," followed by a tone.
2. Say "Call." System responds: "Call. Please say the name or number to call."
3. Say "066" without pausing. System responds: "066."
4. Say "Call." System responds: "OK, dialing 066."

Diagnostics (US/CAN)

Object-ID=3959605 Owner=Szydlowski, Corinna LMD=12-Feb-2016 LMB=Szydlowski, Corinna

Advanced Diagnostics provides a status of the vehicle's key systems with a monthly e-mail, or by pressing . If equipped, Diagnostic Alerts can be received in real-time via e-mail or text. The Proactive Alerts feature (if available) can help predict and alert of potential upcoming maintenance issues with select components on the vehicle, before they become a problem.

OnStar can also monitor and report tire pressure, if the vehicle is equipped with a Tire Pressure Monitoring System.

Diagnostics (MEXICO)

Object-ID=4213529 Owner=Szydlowski, Corinna LMD=18-Jun-2015 LMB=Szydlowski, Corinna

OnStar can perform a monthly check of your vehicle's key operating systems, including the engine, transmission, antilock brakes, and other major vehicle systems through a monthly diagnostics report. OnStar can also monitor tire pressure, if the vehicle is equipped with the Tire Pressure Monitor System. If an On-Demand Diagnostics check is needed, press and an Advisor can run a check.

Cadillac CTS/CTS-V Owner Manual (GMNA-Localizing-U.S./Canada-2ndPrint-11254870) - 2017 - Final Review - 6/14/16

OnStar Additional Information

OnStar Additional Information (US/CAN)

Object-ID=4290931 Owner=Szydlowski, Corinna
LMD=22-Oct-2015 LMB=Szydlowski, Corinna

In-Vehicle Audio Messages

Audio messages may play important information at the following times:

- Prior to vehicle purchase. Press to set up an account.
- With the OnStar Basic Plan, every 60 days.
- After change in ownership and at 90 days.

Transferring Service

Press to request account transfer eligibility information. The Advisor can cancel or change account information.

Selling/Transferring the Vehicle

Call 1-888-4ONSTAR (1-888-466-7827) immediately to terminate your OnStar services if the vehicle is disposed of, sold, transferred, or if the lease ends.

Reactivation for Subsequent Owners

Press and follow the prompts to speak to an Advisor as soon as possible. The Advisor will update vehicle records and explain OnStar service options.

How OnStar Service Works

Automatic Crash Response, Emergency Services, Crisis Assist, Stolen Vehicle Assistance, Advanced Vehicle Diagnostics, Remote Services, Roadside Assistance, Turn-by-Turn Navigation, and Hands-Free Calling are available on most vehicles. Not all OnStar services are available everywhere or on all vehicles. For more information, a full description of OnStar services, system limitations, and OnStar User Terms, Privacy Statement, and Software Terms:

- Call 1-888-4ONSTAR (1-888-466-7827).
- See www.onstar.com (U.S.).
- See www.onstar.ca (Canada).
- Call TTY 1-877-248-2080.
- Press to speak with an Advisor.

OnStar services cannot work unless the vehicle is in a place where OnStar has an agreement with a wireless service provider for service in that area. The wireless service provider must also have coverage, network capacity, reception, and technology compatible with OnStar services. Service involving location information about the vehicle cannot work unless GPS signals are available, unobstructed, and compatible with the OnStar hardware. OnStar services may not work if the OnStar equipment is not properly installed or it has not been properly maintained.
If equipment or software is added, connected, or modified, OnStar services may not work. Other problems beyond the control of OnStar — such as hills, tall buildings, tunnels, weather, electrical system

design and architecture of the vehicle, damage to the vehicle in a crash, or wireless phone network congestion or jamming — may prevent service.

See *Radio Frequency Statement (US/CAN)* ⇨ *397* or *Radio Frequency Statement (MEXICO1)* ⇨ *397* or *Radio Frequency Statement (MEXICO)* ⇨ *397*.

Services for People with Disabilities

Advisors provide services to help Subscribers with physical disabilities and medical conditions.

Press ⓞⓝ to help:

- Locate a gas station with an attendant to pump gas.
- Find a hotel, restaurant, etc., that meets accessibility needs.
- Provide directions to the closest hospital or pharmacy in urgent situations.

TTY Users

OnStar has the ability to communicate to deaf, hard-of-hearing, or speech-impaired customers while in the vehicle. The available dealer-installed TTY system can provide in-vehicle access to all OnStar services, except Virtual Advisor and OnStar Turn-by-Turn Navigation.

OnStar Personal Identification Number (PIN)

A PIN is needed to access some OnStar services. The PIN will need to be changed the first time when speaking with an Advisor. To change the OnStar PIN, contact an OnStar Advisor by pressing ⓞⓝ or calling 1-888-4ONSTAR.

Warranty

OnStar equipment may be warranted as part of the vehicle warranty.

Languages

The vehicle can be programmed to respond in multiple languages. Press ⓞⓝ and ask for an Advisor. Advisors are available in English, Spanish, and French. Available languages may vary by country.

Potential Issues

OnStar cannot perform Remote Door Unlock or Stolen Vehicle Assistance after the vehicle has been off continuously for 10 days without an ignition cycle. If the vehicle has not been started for five days, OnStar can contact Roadside Assistance or a locksmith to help gain access to the vehicle.

Global Positioning System (GPS)

- Obstruction of the GPS can occur in a large city with tall buildings; in parking garages; around airports; in tunnels and underpasses; or in an area with very dense trees. If GPS signals are not available, the OnStar system should still operate to call OnStar. However, OnStar could have difficulty identifying the exact location.
- In emergency situations, OnStar can use the last stored GPS location to send to emergency responders.

A temporary loss of GPS can cause loss of the ability to send a Turn-by-Turn Navigation route. The Advisor may give a verbal route or may ask for a call back after the vehicle is driven into an open area.

Cellular and GPS Antennas

Cellular reception is required for OnStar to send remote signals to the vehicle. Do not place items over or near the antenna to prevent blocking cellular and GPS signal reception.

Unable to Connect to OnStar Message

If there is limited cellular coverage or the cellular network has reached maximum capacity, this message may come on. Press On to try the call again or try again after driving a few miles into another cellular area.

Vehicle and Power Issues

OnStar services require a vehicle electrical system, wireless service, and GPS satellite technologies to be available and operating for features to function properly. These systems may not operate if the battery is discharged or disconnected.

Add-on Electrical Equipment

The OnStar system is integrated into the electrical architecture of the vehicle. Do not add any electrical equipment. See *Add-On Electrical Equipment* ⇨ *276*. Added electrical equipment may interfere with the operation of the OnStar system and cause it to not operate.

Vehicle Software Updates

OnStar or GM may remotely deliver software updates or changes to the vehicle without further notice or consent. These updates or changes may enhance or maintain safety, security, or the operation of the vehicle or the vehicle systems. Software updates or changes may affect or erase data or settings that are stored in the vehicle, such as OnStar Hands-Free Calling name tags, saved navigation destinations, or pre-set radio stations. Neither OnStar nor GM is responsible for any affected or erased data or settings. These updates or changes may also collect personal information. Such collection is described in the OnStar privacy statement or separately disclosed at the time of installation. These updates or changes may also cause a system to automatically communicate with GM servers to collect information about vehicle system status, identify whether updates or changes are available, or deliver updates or changes. An active OnStar agreement constitutes consent to these software updates or changes and agreement that either OnStar or GM may remotely deliver them to the vehicle.

Privacy

The complete OnStar Privacy Statement may be found at www.onstar.com (U.S.), or www.onstar.ca (Canada). We recommend that you review it. If you have any questions, call 1-888-4ONSTAR (1-888-466-7827) or press On to speak with an Advisor. Users of wireless communications are cautioned that the privacy of any information sent via wireless cellular

communications cannot be assured. Third parties may unlawfully intercept or access transmissions and private communications without consent.

OnStar - Software Acknowledgements

Certain OnStar components include libcurl and unzip software and other third party software. Below are the notices and licenses associated with libcurl and unzip and for other third party software please see http://www.lg.com/global/support/opensource/index and https://www.onstar.com/us/en/support/getdocuments.html

libcurl:

COPYRIGHT AND PERMISSION NOTICE

Copyright (c) 1996 - 2010, Daniel Stenberg, <daniel@haxx.se>.

All rights reserved.

Permission to use, copy, modify, and distribute this software for any purpose with or without fee is hereby granted, provided that the above copyright notice and this permission notice appear in all copies.

THE SOFTWARE IS PROVIDED "AS IS," WITHOUT WARRANTY OF ANY KIND, EXPRESS OR IMPLIED, INCLUDING BUT NOT LIMITED TO THE WARRANTIES OF MERCHANTABILITY, FITNESS FOR A PARTICULAR PURPOSE AND NONINFRINGEMENT OF THIRD PARTY RIGHTS. IN NO EVENT SHALL THE AUTHORS OR COPYRIGHT HOLDERS BE LIABLE FOR ANY CLAIM, DAMAGES OR OTHER LIABILITY, WHETHER IN AN ACTION OF CONTRACT, TORT OR OTHERWISE, ARISING FROM, OUT OF OR IN CONNECTION WITH THE SOFTWARE OR THE USE OR OTHER DEALINGS IN THE SOFTWARE.

Except as contained in this notice, the name of a copyright holder shall not be used in advertising or otherwise to promote the sale, use or other dealings in this Software without prior written authorization of the copyright holder.

unzip:

This is version 2005-Feb-10 of the Info-ZIP copyright and license. The definitive version of this document should be available at ftp://ftp.info-zip.org/pub/infozip/license.html indefinitely.

Copyright (c) 1990-2005 Info-ZIP. All rights reserved.

For the purposes of this copyright and license, "Info-ZIP" is defined as the following set of individuals:

Mark Adler, John Bush, Karl Davis, Harald Denker, Jean-Michel Dubois, Jean-loup Gailly, Hunter Goatley, Ed Gordon, Ian Gorman, Chris Herborth, Dirk Haase, Greg Hartwig, Robert Heath, Jonathan Hudson, Paul Kienitz, David Kirschbaum, Johnny Lee, Onno van der Linden, Igor Mandrichenko, Steve P. Miller, Sergio Monesi, Keith Owens, George Petrov, Greg Roelofs, Kai Uwe Rommel, Steve Salisbury, Dave Smith, Steven M. Schweda, Christian Spieler, Cosmin Truta, Antoine Verheijen, Paul von Behren, Rich Wales, Mike White.

This software is provided “as is,” without warranty of any kind, express or implied. In no event shall Info-ZIP or its contributors be held liable for any direct, indirect, incidental, special or consequential damages arising out of the use of or inability to use this software.

Permission is granted to anyone to use this software for any purpose, including commercial applications, and to alter it and redistribute it freely, subject to the following restrictions:

1. Redistributions of source code must retain the above copyright notice, definition, disclaimer, and this list of conditions.
2. Redistributions in binary form (compiled executables) must reproduce the above copyright notice, definition, disclaimer, and this list of conditions in documentation and/or other materials provided with the distribution. The sole exception to this condition is redistribution of a standard UnZipSFX binary (including SFXWiz) as part of a self-extracting archive; that is permitted without inclusion of this license, as long as the normal SFX banner has not been removed from the binary or disabled.
3. Altered versions–including, but not limited to, ports to new operating systems, existing ports with new graphical interfaces, and dynamic, shared, or static library versions–must be plainly marked as such and must not be misrepresented as being the original source. Such altered versions also must not be misrepresented as being Info-ZIP releases–including, but not limited to, labeling of the altered versions with the names “Info-ZIP” (or any variation thereof, including, but not limited to, different capitalizations), “Pocket UnZip,” “WiZ” or “MacZip” without the explicit permission of Info-ZIP. Such altered versions are further prohibited from misrepresentative use of the Zip-Bugs or Info-ZIP e-mail addresses or of the Info-ZIP URL(s).
4. Info-ZIP retains the right to use the names “Info-ZIP,” “Zip,” “UnZip,” “UnZipSFX,” “WiZ,” “Pocket UnZip,” “Pocket Zip,” and “MacZip” for its own source and binary releases.

OnStar Additional Information (MEXICO)

Object-ID=3959813 Owner=Szydlowski, Corinna LMD=11-Mar-2016 LMB=Szydlowski, Corinna

Transferring Service

Press to request account transfer eligibility information. The Advisor can cancel or change account information.

Reactivation for Subsequent Owners

Press and follow the prompts to speak to an Advisor as soon as possible. The Advisor will update vehicle records and will explain OnStar service offers and options.

How OnStar Service Works

Automatic Crash Response, Emergency Services, Crisis Assist, Stolen Vehicle Assistance, Vehicle Diagnostics, Remote Services, Roadside Assistance, and Turn-by-Turn Navigation are available on most vehicles. Not all OnStar services are available everywhere or on all vehicles. For more information, a full description of OnStar services, system limitations, and OnStar terms and conditions, see www.onstar.com.mx.

OnStar service cannot work unless your vehicle is in a place where OnStar has an agreement with a wireless service provider for service in that area, and the wireless service provider has coverage, network capacity, reception, and technology compatible with OnStar service. Service involving location information about the vehicle cannot work unless GPS signals are available, unobstructed, and compatible with the OnStar hardware. OnStar service may not work if the OnStar equipment is not properly installed or it has not been properly maintained.

If equipment or software is added, connected, or modified, OnStar service may not work. Other problems beyond the control of OnStar — such as hills, tall buildings, tunnels, weather, electrical system design and architecture of the vehicle, damage to the vehicle in a crash, or wireless phone network congestion or jamming — may prevent service.

See *Radio Frequency Statement (US/CAN)* ⇨ *397* or *Radio Frequency Statement (MEXICO1)* ⇨ *397* or *Radio Frequency Statement (MEXICO)* ⇨ *397* information regarding NOM-EM-016-SCFI-2015.

This service is provided through a public telecommunications network duly authorized in Mexican Republic.

OnStar.com.mx

The website provides access to account information, allows management of the OnStar subscription, and enables viewing of videos of each service. Get subscription plan pricing and sign up for OnStar Vehicle Diagnostics. Click on the “My Account” tab on the home page. The website navigation and services provided may vary by country.

OnStar Personal Identification Number (NIP)

A NIP is needed to access some OnStar services, like Remote Door Unlock and Stolen Vehicle Assistance. You will be prompted to change the NIP the first time when speaking with an Advisor. To change the OnStar NIP, call OnStar and provide the Advisor with the current number.

Warranty

OnStar equipment may be warranted as part of the New Vehicle Limited Warranty. The manufacturer of the vehicle furnishes detailed warranty information.

Languages

The vehicle can be programmed to respond in multiple languages. Press On and ask for an Advisor. Advisors are available in English and Spanish.

Potential Issues

OnStar cannot perform Remote Door Unlock or Stolen Vehicle Assistance after the vehicle has been off continuously for five days without an ignitions cycle. If the vehicle cannot be started for five days, OnStar can contact Roadside Assistance and a locksmith to help gain access to the vehicle.

Global Positioning System (GPS)

- Obstruction of the GPS can occur in a large city with tall buildings; in parking garages; around airports; in tunnels, and underpasses; or in an area with very dense trees. If GPS signals are not available, the OnStar system should still operate to call OnStar. However, OnStar could have difficulty identifying the exact location.
- In emergency situations, OnStar can use the last stored GPS location to send to emergency responders.
- A temporary loss of GPS can cause loss of the ability to send a Turn-by-Turn Navigation route. The Advisor may give a verbal route or may ask for a call back after the vehicle is driven into an open area.

Cellular and GPS Antennas

Cellular reception is required for OnStar to send remote signals to the vehicle. Do not place items over or near the antenna to prevent blocking cellular and GPS signal reception.

Unable to Connect to OnStar Message

If there is limited cellular coverage or the cellular network has reached maximum capacity, this message may come on. Press to try the call again or try again after driving a few kilometers into another cellular area.

Vehicle and Power Issues

OnStar services require a vehicle electrical system, wireless service, and GPS satellite technologies to be available and operating for features to function properly. These systems may not operate if the battery is discharged or disconnected.

Add-on Electrical Equipment

The OnStar system is integrated into the electrical architecture of the vehicle. Do not add any electrical equipment. See *Add-On Electrical Equipment* ⇨ *276*. Added electrical equipment may interfere with the operation of the OnStar system and cause it to not operate.

Vehicle Software Updates

OnStar or GM may remotely deliver software updates or changes to the vehicle without further notice or consent. These updates or changes may enhance or maintain safety, security, or the operation of the vehicle or the vehicle systems. Software updates or changes may affect or erase data or settings that are stored in the vehicle, such as saved navigation destinations, or pre-set radio stations. Neither OnStar nor GM is responsible for any affected or erased data or settings. These updates or changes may also

collect personal information. Such collection is described in the OnStar privacy statement or separately disclosed at the time of installation. These updates or changes may also cause a system to automatically communicate with GM servers to collect information about vehicle system status, identify whether updates or changes are available, or deliver updates or changes. An active OnStar agreement constitutes consent to these software updates or changes and agreement that either OnStar or GM may remotely deliver them to the vehicle.

Privacy

The responsible of the treatment of your personnel data will be OnStar de México, S. de R.L. de C.V., with head office at Ejército Nacional No. 843, Colonia Granada, Delegación Miguel Hidalgo, zip code 11520, Federal District, Mexico. The personal data we may collect includes: your name, address, email address, telephone number (cell and/or landline) your RFC (Registro Federal de Contribuyentes [taxpayer ID] and your personal identification number (NIP) for OnStar services.

We may also collect information from your vehicle including: your Vehicle identification number (VIN): the make, model and year of your vehicle; the Vehicle license plate number; information about your selling or preferred GM distributor; information about the operation of the vehicle (including diagnostic trouble codes, oil life remaining, tire pressure, fuel economy and odometer readings); information about collisions involving the vehicle, the direction from which it was hit, which airbags have deployed and safety belt usage; information about the use of the vehicle and its features, such as whether a mobile device has been paired with your vehicle; and in limited circumstances, the geographical location and approximate GPS (global positioning satellite) speed of the vehicle.

Your personal and vehicle data will be treated for the following purposes: (i) to provide you with services you have requested (automatic accident response, remote and emergency services, assistance if your vehicle is stolen, step-by-step directions); (ii) to keep our records up to date so that we are able to answer your inquiries; (iii) for troubleshooting and research purposes; (iv) to protect the safety of you or others; (v) to prevent fraud or misuse of the OnStar service; (vi) in the cases set forth by law or the authorities; (vii) to carry out marketing and general promotional activities; (viii) to allow OnStar, General Motors de México, S. de R.L. de C.V., General Motors LLC and all subsidiaries, affiliates or any company of the same corporate group to which OnStar belongs, to carry out advertising activities (offering you products, services and information); and (ix) for business prospecting and statistical market analysis.

It is important to mention that purposes (i), (ii), (iii), (iv), (v) and (vi), give rise to and are necessary to maintain our legal relationship. On the other hand, purposes (vii), (viii) and (ix), do not give rise to and are not necessary to maintain our legal relationship and therefore for these

purposes we make available a mechanism set up at our Customer Service Center in the telephone: 01800-0834994 or via your e-mail: privacidadmexico@onstar.com, so that, if applicable, you can indicate your refusal to have your personal data being processed for the purposes indicated in purposes (vii), (viii) and (ix).

In order to know the integral version of this privacy notice, please visit our web page www.onstar.com.mx.

OnStar - Software Acknowledgements

Certain OnStar components include libcurl and unzip software and other third party software. Below are the notices and licenses associated with libcurl and unzip and for other third party software please see http://www.lg.com/global/support/opensource/index and https://www.onstar.com/us/en/support/getdocuments.html

The original language of the licenses is English, the translations below are provided for reference.

libcurl:

COPYRIGHT AND PERMISSION NOTICE

Copyright (c) 1996 - 2010, Daniel Stenberg, <daniel@haxx.se>.

All rights reserved.

Permission to use, copy, modify, and distribute this software for any purpose with or without fee is hereby granted, provided that the above copyright notice and this permission notice appear in all copies.

THE SOFTWARE IS PROVIDED "AS IS," WITHOUT WARRANTY OF ANY KIND, EXPRESS OR IMPLIED, INCLUDING BUT NOT LIMITED TO THE WARRANTIES OF MERCHANTABILITY, FITNESS FOR A PARTICULAR PURPOSE AND NONINFRINGEMENT OF THIRD PARTY RIGHTS. IN NO EVENT SHALL THE AUTHORS OR COPYRIGHT HOLDERS BE LIABLE FOR ANY CLAIM, DAMAGES OR OTHER LIABILITY, WHETHER IN AN ACTION OF CONTRACT, TORT OR OTHERWISE, ARISING FROM, OUT OF OR IN CONNECTION WITH THE SOFTWARE OR THE USE OR OTHER DEALINGS IN THE SOFTWARE.

Except as contained in this notice, the name of a copyright holder shall not be used in advertising or otherwise to promote the sale, use or other dealings in this Software without prior written authorization of the copyright holder.

unzip:

This is version 2005-Feb-10 of the Info-ZIP copyright and license. The definitive version of this document should be available at ftp://ftp.info-zip.org/pub/infozip/license.html indefinitely.

Copyright (c) 1990-2005 Info-ZIP. All rights reserved.

For the purposes of this copyright and license, "Info-ZIP" is defined as the following set of individuals:

Mark Adler, John Bush, Karl Davis, Harald Denker, Jean-Michel Dubois, Jean-loup Gailly, Hunter Goatley, Ed Gordon, Ian Gorman, Chris Herborth, Dirk Haase, Greg Hartwig, Robert Heath, Jonathan Hudson, Paul Kienitz,

David Kirschbaum, Johnny Lee, Onno van der Linden, Igor Mandrichenko, Steve P. Miller, Sergio Monesi, Keith Owens, George Petrov, Greg Roelofs, Kai Uwe Rommel, Steve Salisbury, Dave Smith, Steven M. Schweda, Christian Spieler, Cosmin Truta, Antoine Verheijen, Paul von Behren, Rich Wales, Mike White.

This software is provided "as is," without warranty of any kind, express or implied. In no event shall Info-ZIP or its contributors be held liable for any direct, indirect, incidental, special or consequential damages arising out of the use of or inability to use this software.

Permission is granted to anyone to use this software for any purpose, including commercial applications, and to alter it and redistribute it freely, subject to the following restrictions:

1. Redistributions of source code must retain the above copyright notice, definition, disclaimer, and this list of conditions.
2. Redistributions in binary form (compiled executables) must reproduce the above copyright notice, definition, disclaimer, and this list of conditions in documentation and/or other materials provided with the distribution. The sole exception to this condition is redistribution of a standard UnZipSFX binary (including SFXWiz) as part of a self-extracting archive; that is permitted without inclusion of this license, as long as the normal SFX banner has not been removed from the binary or disabled.
3. Altered versions–including, but not limited to, ports to new operating systems, existing ports with new graphical interfaces, and dynamic, shared, or static library versions–must be plainly marked as such and must not be misrepresented as being the original source. Such altered versions also must not be misrepresented as being Info-ZIP releases–including, but not limited to, labeling of the altered versions with the names "Info-ZIP" (or any variation thereof, including, but not limited to, different capitalizations), "Pocket UnZip," "WiZ" or "MacZip" without the explicit permission of Info-ZIP. Such altered versions are further prohibited from misrepresentative use of the Zip-Bugs or Info-ZIP e-mail addresses or of the Info-ZIP URL(s).
4. Info-ZIP retains the right to use the names "Info-ZIP," "Zip," "UnZip," "UnZipSFX," "WiZ," "Pocket UnZip," "Pocket Zip," and "MacZip" for its own source and binary releases.

libcurl:

COPYRIGHT AND PERMISSION NOTICE

Copyright (c) 1996 - 2010, Daniel Stenberg, <daniel@haxx.se>.

All rights reserved.

Permission to use, copy, modify, and distribute this software for any purpose with or without fee is hereby

granted, provided that the above copyright notice and this permission notice appear in all copies.

THE SOFTWARE IS PROVIDED "AS IS," WITHOUT WARRANTY OF ANY KIND, EXPRESS OR IMPLIED, INCLUDING BUT NOT LIMITED TO THE WARRANTIES OF MERCHANTABILITY, FITNESS FOR A PARTICULAR PURPOSE AND NONINFRINGEMENT OF THIRD PARTY RIGHTS. IN NO EVENT SHALL THE AUTHORS OR COPYRIGHT HOLDERS BE LIABLE FOR ANY CLAIM, DAMAGES OR OTHER LIABILITY, WHETHER IN AN ACTION OF CONTRACT, TORT OR OTHERWISE, ARISING FROM, OUT OF OR IN CONNECTION WITH THE SOFTWARE OR THE USE OR OTHER DEALINGS IN THE SOFTWARE.

Except as contained in this notice, the name of a copyright holder shall not be used in advertising or otherwise to promote the sale, use or other dealings in this Software without prior written authorization of the copyright holder.

unzip:

This is version 2005-Feb-10 of the Info-ZIP copyright and license. The definitive version of this document should be available at ftp://ftp.info-zip.org/pub/infozip/license.html indefinitely.

Copyright (c) 1990-2005 Info-ZIP. All rights reserved.

For the purposes of this copyright and license, "Info-ZIP" is defined as the following set of individuals:

Mark Adler, John Bush, Karl Davis, Harald Denker, Jean-Michel Dubois, Jean-loup Gailly, Hunter Goatley, Ed Gordon, Ian Gorman, Chris Herborth, Dirk Haase, Greg Hartwig, Robert Heath, Jonathan Hudson, Paul Kienitz, David Kirschbaum, Johnny Lee, Onno van der Linden, Igor Mandrichenko, Steve P. Miller, Sergio Monesi, Keith Owens, George Petrov, Greg Roelofs, Kai Uwe Rommel, Steve Salisbury, Dave Smith, Steven M. Schweda, Christian Spieler, Cosmin Truta, Antoine Verheijen, Paul von Behren, Rich Wales, Mike White.

This software is provided "as is," without warranty of any kind, express or implied. In no event shall Info-ZIP or its contributors be held liable for any direct, indirect, incidental, special or consequential damages arising out of the use of or inability to use this software.

Permission is granted to anyone to use this software for any purpose, including commercial applications, and to alter it and redistribute it freely, subject to the following restrictions:

1. Redistributions of source code must retain the above copyright notice, definition, disclaimer, and this list of conditions.
2. Redistributions in binary form (compiled executables) must reproduce the above copyright notice, definition, disclaimer, and this list of conditions in documentation and/or other materials provided with the distribution. The sole exception to this condition is redistribution of a standard UnZipSFX binary (including SFXWiz) as part of a self-extracting archive; that is permitted without inclusion of this license, as long as the

normal SFX banner has not been removed from the binary or disabled.

3. Altered versions–including, but not limited to, ports to new operating systems, existing ports with new graphical interfaces, and dynamic, shared, or static library versions–must be plainly marked as such and must not be misrepresented as being the original source. Such altered versions also must not be misrepresented as being Info-ZIP releases–including, but not limited to, labeling of the altered versions with the names "Info-ZIP" (or any variation thereof, including, but not limited to, different capitalizations), "Pocket UnZip," "WiZ" or "MacZip" without the explicit permission of Info-ZIP. Such altered versions are further prohibited from misrepresentative use of the Zip-Bugs or Info-ZIP e-mail addresses or of the Info-ZIP URL(s).

4. Info-ZIP retains the right to use the names "Info-ZIP," "Zip," "UnZip," "UnZipSFX," "WiZ," "Pocket UnZip," "Pocket Zip," and "MacZip" for its own source and binary releases.

Cadillac CTS/CTS-V Owner Manual (GMNA-Localizing-U.S./Canada-2ndPrint-11254870) - 2017 - Final Review - 6/14/16

Index

A

Accessories and Modifications 279
Accessory Power 219
Adaptive Cruise Control 240
Adaptive Forward
  Lighting (AFL) 173
Adaptive Forward Lighting
  (AFL) Light 139
Add-On Electrical Equipment 276
Additional Information
  OnStar® 409, 413
Additional Maintenance
  and Care 370
Adjustments
  Lumbar, Front Seats 61
  Thigh Support 62
Air Cleaner/Filter, Engine 292
Air Conditioning 190, 195
Air Filter, Passenger
  Compartment 198
Air Vents 197
Airbag System
  Check 88
  How Does an Airbag Restrain?.....81
  Passenger Sensing System 83
  What Makes an Airbag Inflate? 81
  What Will You See after an
    Airbag Inflates? 81
Airbag System (cont'd)
  When Should an Airbag
    Inflate?.....80
  Where Are the Airbags? 78
Airbags
  Adding Equipment to the
    Vehicle 87
  Passenger Status Indicator 130
  Readiness Light 129
  Servicing Airbag-Equipped
    Vehicles 87
  System Check 77
Alarm
  Vehicle Security 46
Alert
  Lane Change 261
  Side Blind Zone (SBZA) 261
All-Season Tires 319
All-Wheel Drive 227, 304
Antilock Brake System (ABS) 227
  Warning Light 134
Appearance Care
  Exterior 353
  Interior 358
Armrest Storage 108
Assistance Systems for Driving 256
Assistance Systems for Parking
  and Backing 250

Auto Stop Mode 138
Automatic
  Dimming Mirrors 49
  Door Locks 42
  Forward Braking 259
  Headlamp System 172
  Transmission 224
  Transmission Fluid 292
Automatic Transmission
  Manual Mode 226
  Shift Lock Control Function
    Check 305

B

Battery
  Exterior Lighting Battery
    Saver 176
  Load Management 176
  Power Protection 176
  Voltage and Charging
    Messages 147
Battery - North America 303, 347
Boost Gauge 126
Brake
  Parking, Electric 228
  System Warning Light 133
Brakes 301
  Antilock 227
  Assist 229
Brakes (cont'd)
  Fluid 302
  System Messages 147
Braking 201
  Automatic Forward 259
Break-In, New Vehicle 215
Bulb Replacement 308
  Back-up Lamps 307
  Halogen Bulbs 307
  Headlamp Aiming 306
  Headlamps 307
  High Intensity Discharge
    (HID) Lighting 307
  License Plate Lamps 308
Buying New Tires 334

C

Cadillac Premium Care
  Maintenance 364
Calibration 115
California
  Fuel Requirements 268
  Perchlorate Materials
    Requirements 278
California Proposition
  65 Warning 278, 303, 347
Canadian Vehicle Owners 2
Capacities and Specifications 379
Carbon Monoxide
  Engine Exhaust 223
  Trunk 44
  Winter Driving 209
Cargo
  Tie-Downs 109
Caution, Danger, and Warning 2
Center Console Storage 109
Chains, Tire 338
Charging
  Wireless 117
Charging System Light 131
Check
  Malfunction Indicator Engine
    Light 131
Child Restraints
  Infants and Young Children 90
  Lower Anchors and Tethers for
    Children 95
  Older Children 89
  Securing 101, 104
  Systems 93
Circuit Breakers 309
Cleaning
  Exterior Care 353
  Interior Care 358
Climate Control Systems
  Dual Automatic 190

Cadillac CTS/CTS-V Owner Manual (GMNA-Localizing-U.S./Canada-2ndPrint-11254870) - 2017 - Final Review - 6/14/16

Climate Control Systems (cont'd)
Rear 195
Clock 115
Cluster, Instrument 120
Collision Damage Repair 394
Compartments
Storage 107
Compass 115
Messages 148
Competitive Driving Mode 235
Composite Materials 215
Compressor Kit, Tire Sealant 340
Connections
OnStar® 406
Connectivity 408
Control
Traction and Electronic
Stability 230
Control of a Vehicle 201
Convenience Net 110
Convex Mirrors 48
Coolant
Engine 296
Engine Temperature Gauge 128
Engine Temperature Warning
Light 136
Cooling 190, 195
Cooling System 294
Cooling System (cont'd)
Engine Messages 149
Courtesy Lamps 174
Courtesy Transportation
Program 393
Cruise Control 238
Light 139
Messages 148
Cruise Control, Adaptive 240
Cupholders 108
Customer Assistance 387
Offices 386
Text Telephone (TTY) Users 387
Customer Information
Service Publications Ordering
Information 396
Customer Satisfaction
Procedure 383, 385

D

Damage Repair, Collision 394
Danger, Warning, and Caution 2
Data Collection
Infotainment System 400
OnStar 400
Data Recorder
Performance 178, 183
Data Recorders, Event 399
Daytime Running Lamps (DRL) ... 172
Defensive Driving 201
Delayed Locking 42
Diagnostics
OnStar® 408
Differential, Limited-Slip 237, 238
Distracted Driving 200
Dome Lamps 174
Door
Ajar Light 140
Ajar Messages 149
Delayed Locking 42
Locks 40
Power Locks 42
Rear Seat Pass-Through 69
Drive Belt Routing, Engine 381
Drive Systems
All-Wheel Drive 227, 304
Driver Assistance Systems 249
Driver Information
Center (DIC) 140
Driver Mode Control 231
Driving
Assistance Systems 256
Characteristics and
Towing Tips 271
Competitive 235
Defensive 201
Drunk 201

Driving (cont'd)
For Better Fuel Economy 29
Hill and Mountain Roads 209
If the Vehicle is Stuck 211
Loss of Control 203
Off-Road Recovery 203
Track Events and Competitive ... 204
Vehicle Load Limits 211
Wet Roads 208
Winter 209
Dual Automatic Climate
Control System 190

E

Electric Parking Brake 228
Electrical Equipment, Add-On 276
Electrical System
Engine Compartment Fuse
Block 310
Fuses and Circuit Breakers 309
Instrument Panel Fuse Block 313
Overload 309
Rear Compartment Fuse
Block 315
Emergency
OnStar® 403
Engine
Air Cleaner/Filter 292
Engine (cont'd)
Check and Service Engine
Soon Light 131
Compartment Overview 281
Coolant 296
Coolant Heater 220
Coolant Temperature Gauge 128
Coolant Temperature
Warning Light 136
Cooling System 294
Cooling System Messages 149
Drive Belt Routing 381
Exhaust 223
Oil Life System 291
Oil Messages 149
Oil Pressure Light 137
Overheating 299
Power Messages 150
Running While Parked 223
Starting 21, 217
Engine Oil
Temperature Gauge 127
Entry Lighting 175
Equipment, Towing 275
Event Data Recorders 399
Exit Lighting 175
Extended Parking 222
Extender, Safety Belt 75
Exterior Lamp Controls 169
Exterior Lamps Off Reminder 171
Exterior Lighting Battery Saver 176

F

Features
Memory 14
Filter,
Engine Air Cleaner 292
Flash-to-Pass 171
Flashers, Hazard Warning 173
Flat Tire 339
Floor Mats 360
Fluid
Automatic Transmission 292
Brakes 302
Washer 300
Folding Mirrors 49
Forward Automatic Braking 259
Forward Collision Alert (FCA)
System 257
Frequency Statement
Radio 397
Front Seats
Heated and Ventilated 65
Fuel 267
Additives 269
Economy Driving 29

Cadillac CTS/CTS-V Owner Manual (GMNA-Localizing-U.S./Canada-2ndPrint-11254870) - 2017 - Final Review - 6/14/16

Fuel (cont'd)
Filling a Portable Fuel Container 270
Filling the Tank 269
Foreign Countries 269
Gauge 125
Low Fuel Warning Light 138
Requirements, California 268
System Messages 150
Fuses
Engine Compartment Fuse Block 310
Fuses and Circuit Breakers 309
Instrument Panel Fuse Block 313
Rear Compartment Fuse Block 315

G

Garage Door Opener 163
Programming 163, 165
Gauges
Boost 126
Engine Coolant Temperature 128
Engine Oil Temperature 127
Fuel 125
Odometer 125
Speedometer 124
Tachometer 125
Trip Odometer 125
Gauges (cont'd)
Warning Lights and Indicators 119
General Information
Service and Maintenance 362
Towing 271
Vehicle Care 278
Glove Box 108

H

Halogen Bulbs 307
Hazard Warning Flashers 173
Head Restraints 58
Head-up Display 143
Headlamps
Adaptive Forward Lighting (AFL) 173
Aiming 306
Automatic 172
Bulb Replacement 307
Daytime Running Lamps (DRL) 172
Flash-to-Pass 171
High Intensity Discharge (HID) Lighting 307
High-Beam On Light 139
High/Low Beam Changer 171
Lamps On Reminder 139
Heated
Rear Seats 68
Steering Wheel 113
Heated and Ventilated Front Seats 65
Heated Mirrors 49
Heater
Engine Coolant 220
Heating 190, 195
High-Beam On Light 139
High-Speed Operation 327
Hill and Mountain Roads 209
Hood 280
Horn 113
How to Wear Safety Belts Properly 71
HVAC 190, 195

I

Ignition Positions 216
Immobilizer 47
Indicator
Vehicle Ahead 135
Infants and Young Children, Restraints 90
Infotainment 178
Infotainment System 400
Instrument Cluster 120

Instrument Panel
Storage Area 107
Interior Rearview Mirrors 50
Introduction 2

J

Jump Starting - North America 347

K

Key and Lock Messages 150
Keyless Entry
Remote (RKE) System 32
Keys 31

L

Labeling, Tire Sidewall 321
Lamps
Courtesy 174
Daytime Running (DRL) 172
Dome 174
Exterior Controls 169
Exterior Lamps Off Reminder 171
Exterior Lighting Battery
Saver 176
License Plate 308
Malfunction Indicator 131
Messages 151
On Reminder 139
Lamps (cont'd)
Reading 175
Lane Change Alert (LCA) 261
Lane Departure
Warning (LDW) 263
Lane Keep Assist (LKA) 263
Lane Keep Assist Light 134
Lap-Shoulder Belt 71
LATCH System
Replacing Parts after a Crash 101
LATCH, Lower Anchors and
Tethers for Children 95
LED Lighting 307
Light
Adaptive Forward Lighting
(AFL) Light 139
Parking Brake 133
Light, Auto Stop Mode 138
Lighting
Adaptive Forward 173
Entry 175
Exit 175
Illumination Control 174
LED 307
Lights 134
Airbag Readiness 129
Antilock Brake System (ABS)
Warning 134
Lights (cont'd)
Brake System Warning 133
Charging System 131
Cruise Control 139
Door Ajar 140
Engine Coolant Temperature
Warning 136
Engine Oil Pressure 137
Flash-to-Pass 171
High-Beam On 139
High/Low Beam Changer 171
Low Fuel Warning 138
Safety Belt Reminders 129
Security 138
Service Electric Parking Brake ... 134
StabiliTrak® OFF 136
Tire Pressure 137
Traction Control System
(TCS)/StabiliTrak® 136
Traction Off 135
Limited-Slip Differential 237, 238
Locks
Automatic Door 42
Delayed Locking 42
Door 40
Lockout Protection 43
Power Door 42
Safety 43

Cadillac CTS/CTS-V Owner Manual (GMNA-Localizing-U.S./Canada-2ndPrint-11254870) - 2017 - Final Review - 6/14/16

Loss of Control 203
Low Fuel Warning Light 138
Low-Profile Tires 320
Lower Anchors and Tethers for Children (LATCH System) 95
Lumbar Adjustment 61
  Front Seats 61

M

Maintenance
  Records 376
Maintenance and Care
  Additional 370
Maintenance Schedule 364
  Recommended Fluids and Lubricants 372
Malfunction Indicator Lamp 131
Manual Mirrors 49
Manual Mode 226
Memory Features 14
Memory Seats 63
Messages
  Airbag System 156
  Battery Voltage and Charging 147
  Brake System 147
  Compass 148
  Door Ajar 149
  Engine Cooling System 149
  Engine Oil 149
Messages (cont'd)
  Engine Power 150
  Fuel System 150
  Key and Lock 150
  Lamp 151
  Object Detection System 151
  Ride Control System 154
  Safety Belt 156
  Security 156
  Service Vehicle 156
  Starting the Vehicle 157
  Tire 157
  Transmission 157
  Vehicle 147
  Vehicle Reminder 158
  Vehicle Speed 158
  Washer Fluid 158
Mirror
  Rear Camera 50
Mirrors
  Automatic Dimming 49
  Automatic Dimming Rearview 50
  Convex 48
  Folding 49
  Heated 49
  Manual 49
  Power 49
  Tilt in Reverse 50
Mirrors, Interior Rearview 50
Mode 231
  Driver Control 231
Monitor System, Tire Pressure 327

N

Navigation
  OnStar® 404, 405
Net, Convenience 110
New Vehicle Break-In 215

O

Object Detection System
  Messages 151
Odometer 125
  Trip 125
Off-Road
  Recovery 203
Oil
  Engine 288
  Engine Oil Life System 291
  Messages 149
  Pressure Light 137
Older Children, Restraints 89
Online Owner Center 387
OnStar 400
OnStar® Additional
  Information 409, 413
OnStar® Connections 406

OnStar® Diagnostics 408
OnStar® Emergency 403
OnStar® Navigation 404, 405
OnStar® Overview 401, 402
OnStar® Security 403, 404
Ordering
  Service Publications 396
Outlets
  Power 116
Overheating, Engine 299

P

Park
  Shifting Into 221
  Shifting Out of 222
Parking
  Brake and P (Park)
    Mechanism Check 306
  Extended 222
  Over Things That Burn 222
Parking Assist 250
Parking Brake
  Light 133
Parking or Backing
  Assistance Systems 250
Passenger Airbag Status
  Indicator 130
Passenger Compartment Air
  Filter 198
Passenger Sensing System 83
Perchlorate Materials
  Requirements, California 278
Performance Data
  Recorder (PDR) 178, 183
Personalization
  Vehicle 158
Power
  Door Locks 42
  Mirrors 49
  Outlets 116
  Protection, Battery 176
  Retained Accessory (RAP) 219
  Seat Adjustment 59
  Windows 52
Pregnancy, Using Safety Belts 75
Premium Care Maintenance
  Cadillac 364
Privacy
  Vehicle Data Recording 399
Program
  Courtesy Transportation 393
Proposition
  65 Warning,
  California 278, 303, 347

R

Radio Frequency Statement 397
Reading Lamps 175
Rear Camera Mirror 50
Rear Climate Control System 195
Rear Seat Pass-Through Door 69
Rear Seats 66
  Heated 68
Rear Vision Camera (RVC) 250
Rear Window Sunshade 55
Rearview Mirrors
  Automatic Dimming 50
Reclining Seatbacks 62
Recommended Fluids and
  Lubricants 372
Records
  Maintenance 376
Recreational Vehicle Towing 351
Remote Keyless Entry (RKE)
  System 32
Remote Vehicle Start 38
Replacement Bulbs 308
Replacement Parts
  Airbags 88
  Maintenance 374
Replacing Airbag System 88
Replacing LATCH System Parts
  after a Crash 101

Cadillac CTS/CTS-V Owner Manual (GMNA-Localizing-U.S./Canada-
2ndPrint-11254870) - 2017 - Final Review - 6/14/16

Replacing Safety Belt System
Parts after a Crash 76
Reporting Safety Defects
Canadian Government 398
General Motors 399
U.S. Government 398
Restraints
Where to Put 94
Retained Accessory
Power (RAP) 219
Reverse Tilt Mirrors 50
Ride Control Systems
Enhanced Traction
System (ETS) 237, 238
Messages 154
Roads
Driving, Wet 208
Roadside Service 388, 390
Roof
Sunroof 55
Rotation, Tires 331
Routing, Engine Drive Belt 381
Run-Flat Tires 319
Running the Vehicle While
Parked 223

S

Safety Belts 69
Care 76
Safety Belts (cont'd)
Extender 75
How to Wear Safety Belts
Properly 71
Lap-Shoulder Belt 71
Messages 156
Reminders 129
Replacing after a Crash 76
Use During Pregnancy 75
Safety Defects Reporting
Canadian Government 398
General Motors 399
U.S. Government 398
Safety Locks 43
Safety System Check 75
Scheduling Appointments 393
Sealant Kit, Tire 340
Seats
Head Restraints 58
Heated and Ventilated Front 65
Heated, Rear 68
Lumbar Adjustment, Front 61
Memory 63
Power Adjustment, Front 59
Rear 66
Reclining Seatbacks 62
Securing Child Restraints 101, 104
Security
Light 138
Messages 156
OnStar® 403, 404
Vehicle 46
Vehicle Alarm 46
Service 198
Accessories and
Modifications 279
Doing Your Own Work 279
Engine Soon Light 131
Maintenance Records 376
Maintenance, General
Information 362
Parts Identification Label 378
Publications Ordering
Information 396
Scheduling Appointments 393
Vehicle Messages 156
Service Electric Parking Brake
Light 134
Services
Special Application 369
Servicing the Airbag 87
Shift Lock Control Function
Check, Automatic
Transmission 305

Shifting
Into Park 221
Out of Park 222
Side Blind Zone Alert (SBZA) 261
Signals, Turn and Lane-Change 173
Special Application Services 369
Specifications and Capacities 379
Speedometer 124
StabiliTrak
OFF Light 136
Start Vehicle, Remote 38
Starter Switch Check 305
Starting the Engine 21, 217
Starting the Vehicle Messages 157
Steering 202
Heated Wheel 113
Wheel Adjustment 112
Wheel Controls 113
Storage Areas
Armrest 108
Center Console 109
Convenience Net 110
Glove Box 108
Instrument Panel 107
Storage Compartments 107
Storing the Tire Sealant and Compressor Kit 346
Stuck Vehicle 211
Summer Tires 321
Sun Visors 54
Sunroof 55
Sunshade
Rear Window 55
Symbols 3
System
Forward Collision Alert (FCA) 257
Infotainment 178, 400
Systems
Driver Assistance 249

T

Tachometer 125
Text Telephone (TTY) Users 387
Theft-Deterrent Systems 47
Immobilizer 47
Thigh Support Adjustment 62
Time 115
Tires 318
All-Season 319
Buying New Tires 334
Chains 338
Designations 322
Different Size 335
If a Tire Goes Flat 339
Inspection 331
Low Profile 320
Messages 157
Tires (cont'd)
Pressure 325, 327
Pressure Light 137
Pressure Monitor Operation 328
Pressure Monitor System 327
Rotation 331
Run-Flat 319
Sealant and Compressor Kit 340
Sealant and Compressor Kit, Storing 346
Sidewall Labeling 321
Terminology and Definitions 323
Uniform Tire Quality Grading 335
Wheel Alignment and Tire Balance 337
Wheel Replacement 337
When It Is Time for New Tires 333
Winter 319
Towing
Driving Characteristics 271
Equipment 275
General Information 271
Recreational Vehicle 351
Trailer 274, 275
Vehicle 350
Track Events and Competitive Driving 204

Cadillac CTS/CTS-V Owner Manual (GMNA-Localizing-U.S./Canada-2ndPrint-11254870) - 2017 - Final Review - 6/14/16

Traction
Control System (TCS)/
StabiliTrak® Light 136
Limited-Slip Differential 237, 238
Off Light 135
Traction Control/Electronic
Stability Control 230
Trailer
Towing 274, 275
Transmission
Automatic 224
Fluid, Automatic 292
Messages 157
Transportation Program,
Courtesy 393
Trip Odometer 125
Trunk 44
Turn and Lane-Change Signals 173

U

Uniform Tire Quality Grading 335
Universal Remote System 163
Operation 167
Programming 163, 165
Using This Manual 2

V

Vehicle
Alarm System 46
Vehicle (cont'd)
Canadian Owners 2
Control 201
Identification Number (VIN) 378
Load Limits 211
Messages 147
Personalization 158
Reminder Messages 158
Remote Start 38
Security 46
Speed Messages 158
Towing 350
Vehicle Ahead Indicator 135
Vehicle Care
Storing the Tire Sealant and
Compressor Kit 346
Tire Pressure 325
Vehicle Data Recording and
Privacy 399
Vehicle-to-Vehicle 265
Ventilation, Air 197
Visors 54

W

Warning
Brake System Light 133
Caution and Danger 2
Warning (cont'd)
Lane Departure (LDW) 263
Warning Lights, Gauges, and
Indicators 119
Warnings
Hazard Flashers 173
Washer Fluid 300
Messages 158
Wheels
Alignment and Tire Balance 337
Different Size 335
Replacement 337
When It Is Time for New Tires 333
Where to Put the Restraint 94
Wi-Fi 406
Windows 52
Power 52
Windshield
Wiper/Washer 113
Winter
Driving 209
Winter Tires 319
Wireless Charging 117