Model: R1 EXT RW

External Photos

16 March 2020

Revision 0

Harman International Industries, Inc.

30001 Cabot Drive

Novi, MI 48377

U.S.A.

Table of Contents

Revision History 3
Top Casting 4
Bottom Casting 5
Casting Side 1 6
Casting Side 2 7
Casting Side 3 8
Casting Side 4 9

Revision History

Revision	Date	Description
0	16MAR2020	Initial release.

Top Casting

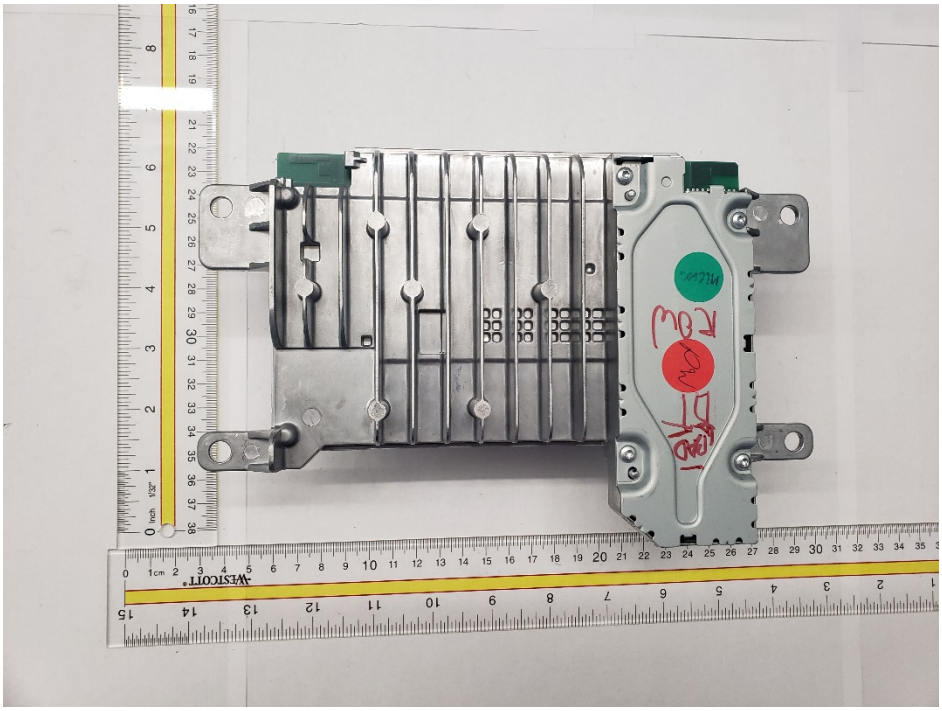

Bottom Casting

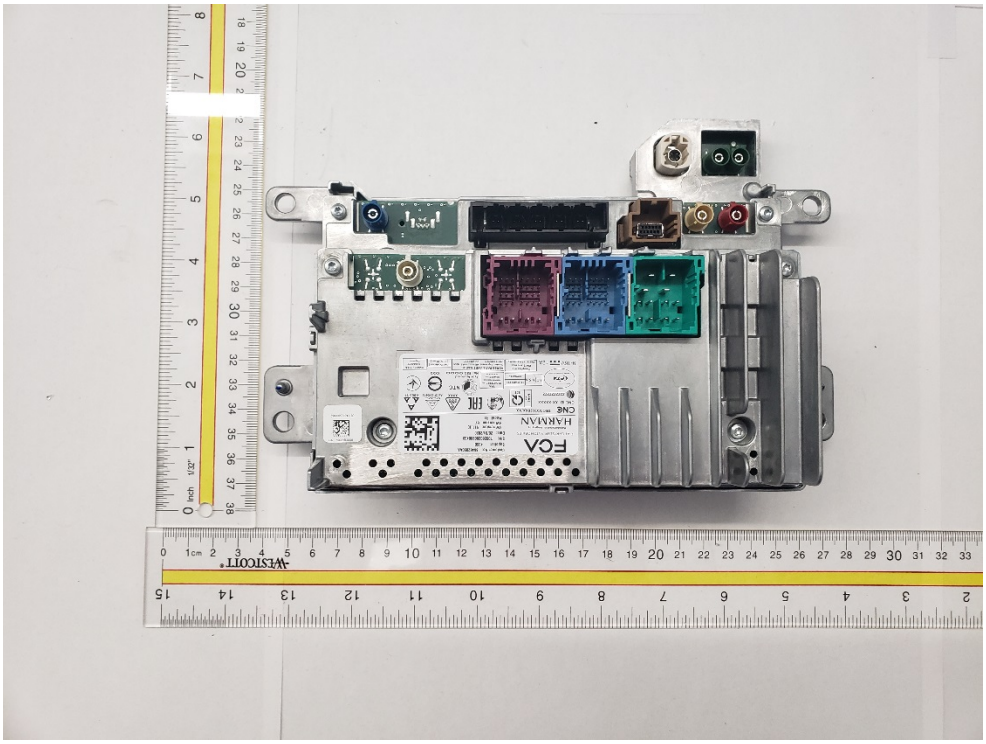

Casting Side 1

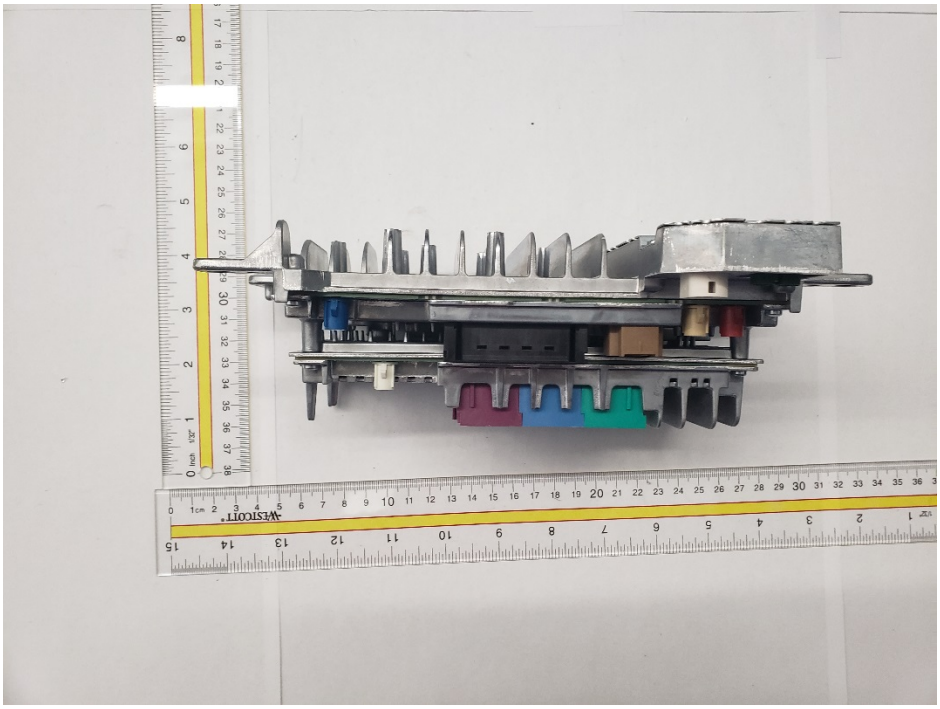

Casting Side 2

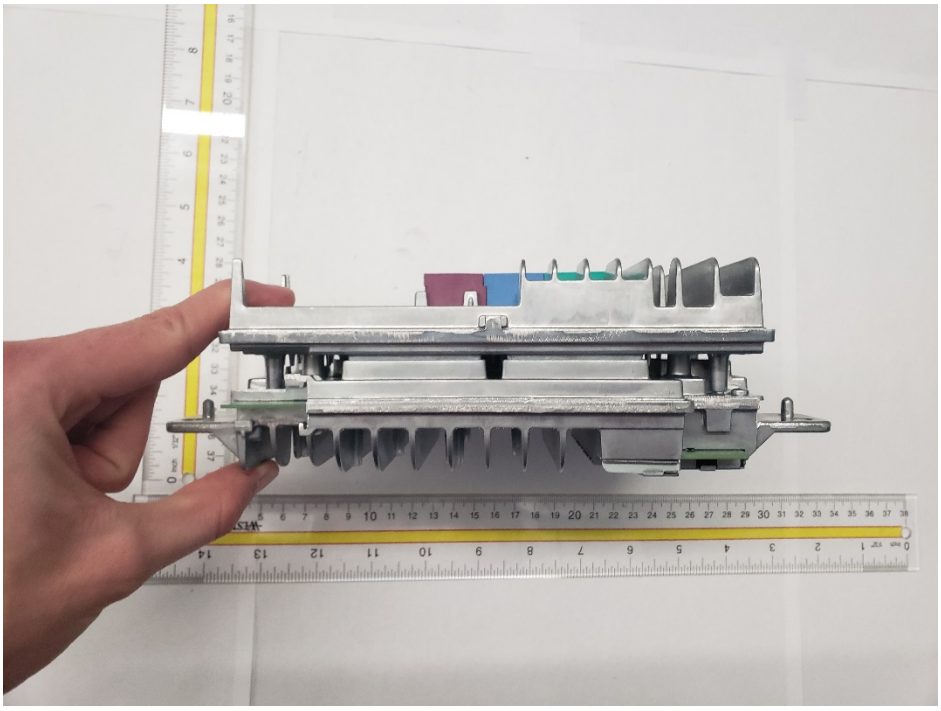

Casting Side 3

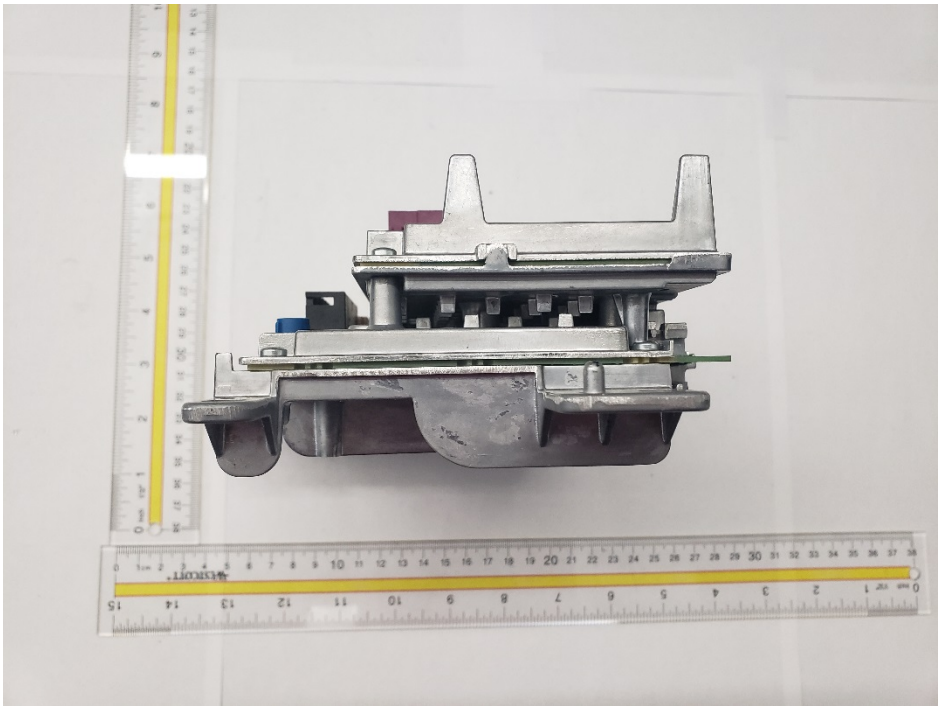
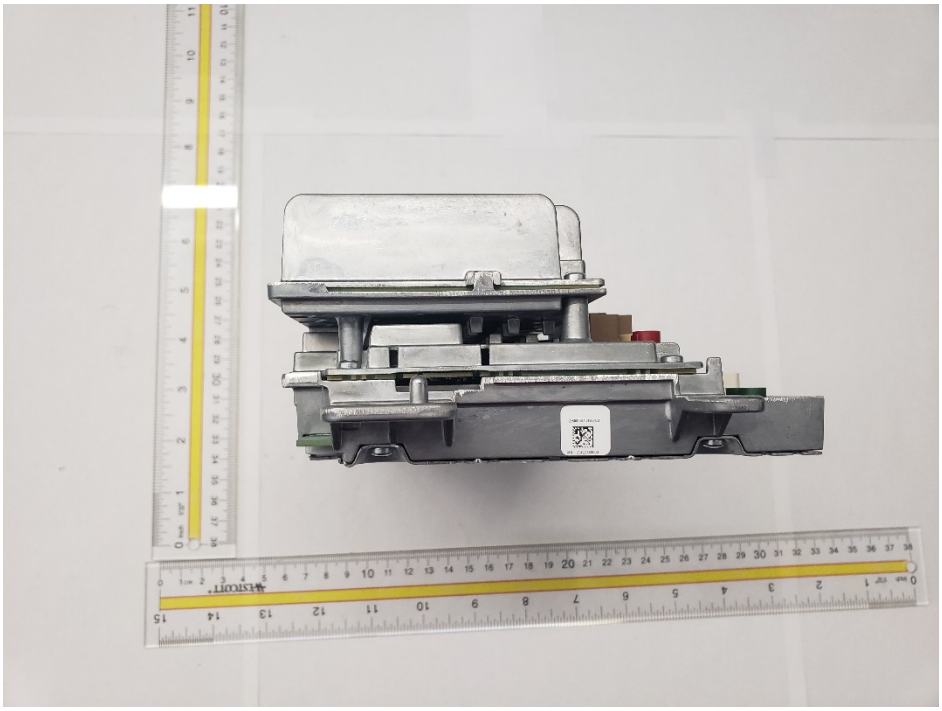
Casting Side 4