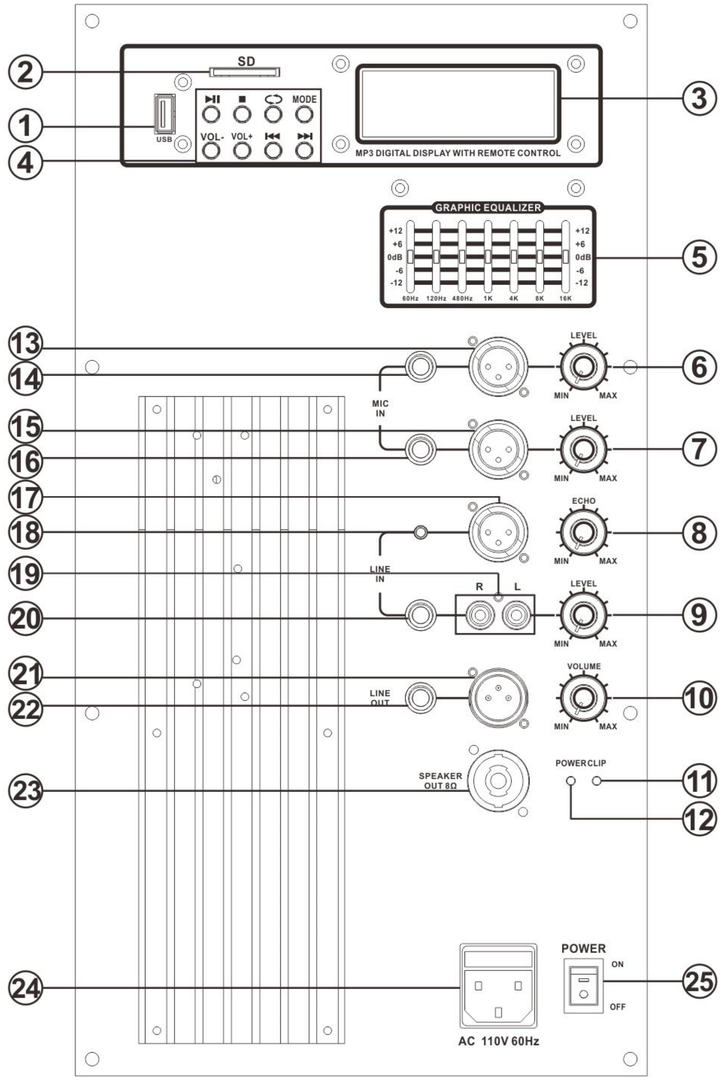


1.USB input
2.SD card input
3.LCD screen
4.MP3 control
5.7 band EQ control
6.Mic1 input level control
7.Mic2 input level control
8.ECHO control
9.Line input level control
10.Main volume control
11. Clip LED indicator
12. Power LED indicator
13.XLR microphone1 input
14.6.35mm microphone1 input
15.XLR microphone2 input
16.6.35mm microphone2 input
17.XLR line input
18.3.5mm line input
19.RCA phone (R+L) line inputs
20.6.35mm line input
21.XLR line output
22.6.35mm line output
23.Speaker out 8ohm
24.Fused IEC mains inlet
26.Main power switch



BLACKMORE
MOBILE ELECTRONICS

# INSTRUCTION MANUAL

# BJS-180BT

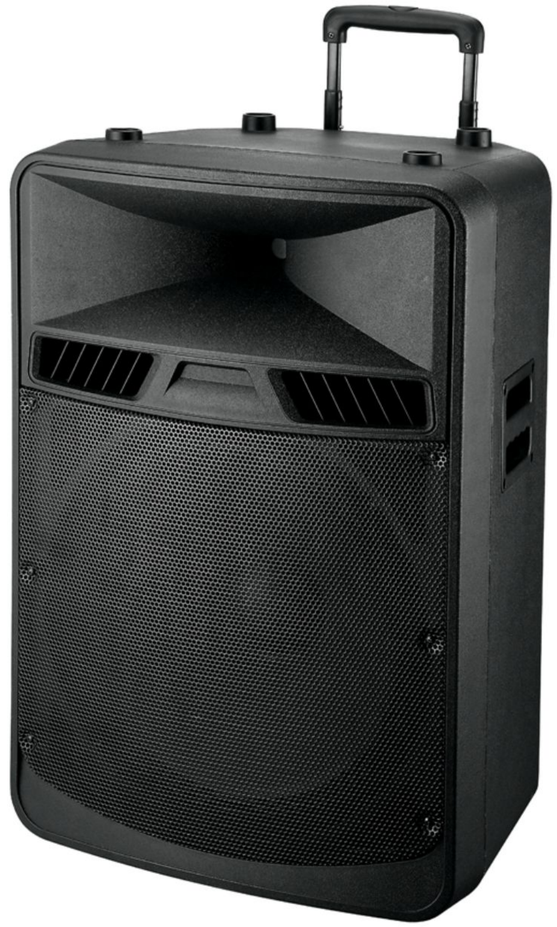

*OPERATION.....1*
*GENERAL USE INSTRUCTIONS.....2*
*SPECIFICATIONS.....2*
*CONTROLS AND CONNECTIONS.....3*

- **CAUTION, TO REDUCE THE RISK OF ELECTRIC SHOCK, DO NOT REMOVE COVER [OR BACK]**
- **THIS PRODUCT MUST BE EARTHED**
- **NO USER-SERVICEABLE PARTS INSIDE, REFER SERVICING TO QUALIFIED SERVICE PERSONNEL**

## OPERATION

1. Prior to switching on, turn volume down to minimum.
2. Connect the audio source to the appropriate Input socket.
3. Another Speaker can be connected to the output socket, so that several boxes canbe daisy chained.
4. Connect to the mains supply.
5. Switch on the audio source, followed by the active speaker.
6. Set the volume with the applicable control.





- Do not overload the box to avoid damage to the speakers.
- Do not place an open fire (candles etc) on top or next to the box - FIRE HAZARD
- Only connect to an **earthed** mains outlet of 110Vac/60Hz.
- For indoor use only. If the box is used outdoors, you need to make sure that no humidity can enter the box.
- When not in use, unplug the unit from the mains.
- Unplug the unit from the mains prior to checking or replacing the fuse.
- Make sure that the box is placed on a stable, strong surface.
- The boxes can be hung. Use only strong and approved mounting material. During the mounting, make sure that nobody is standing below the mounting area.
- Do not place liquids on the box and protect it against humidity. Humidity can shorten the life time considerably.
- Only use suitable means of transportation if you want to move the box - BEWARE OF YOUR BACK !!
- Always unplug the unit during a thunderstorm or when it is not in use.
- If the unit has not been used for a long period of time, condensation can occur inside the housing. Please let the unit reach room temperature prior to use.
- Never try to repair the unit yourself. It does not contain any user serviceable parts.
- Run the mains lead in such a way that nobody can fall over it and nothing can be put in it.
- Set the unit to the lowest volume prior to switching it on.
- Keep the unit out of the reach of children.

## *SPECIFICATIONS*

| | BJS-180BT |
|---|---|
| Woofer | 18” |
| Power | 7000 W |
| Impedance | 8ohm |
| Frequency Range | 35Hz-18KHz(-10dB) |
| Sensitivity | 96dB (+/- 2dB) |
| Connector | XLR/6.35mm/RCA |
| Mic Input Level | <5mV |
| Line Input/Output Level | 250mV |

## FCC Statement

This equipment has been tested and found to comply with the limits for a Class B digital device, pursuant to Part 15 of the FCC Rules. These limits are designed to provide reasonable protection against harmful interference in a residential installation. This equipment generates uses and can radiate radio frequency energy and, if not installed and used in accordance with the instructions, may cause harmful interference to radio communications. However, there is no guarantee that interference will not occur in a particular installation. If this equipment does cause harmful interference to radio or television reception, which can be determined by turning the equipment off and on, the user is encouraged to try to correct the interference by one or more of the following measures:

-- Reorient or relocate the receiving antenna.

-- Increase the separation between the equipment and receiver.

-- Connect the equipment into an outlet on a circuit different from that to which the receiver is connected.

-- Consult the dealer or an experienced radio/TV technician for help.

This device complies with part 15 of the FCC Rules. Operation is subject to the following two conditions:(1) This device may not cause harmful interference, and (2) this device must accept any interference received, including interference that may cause undesired operation.

Changes or modifications not expressly approved by the party responsible for compliance could void the user's authority to operate the equipment.