1.1 Reference Architecture

The reference architecture of the Kernel module is shown here below

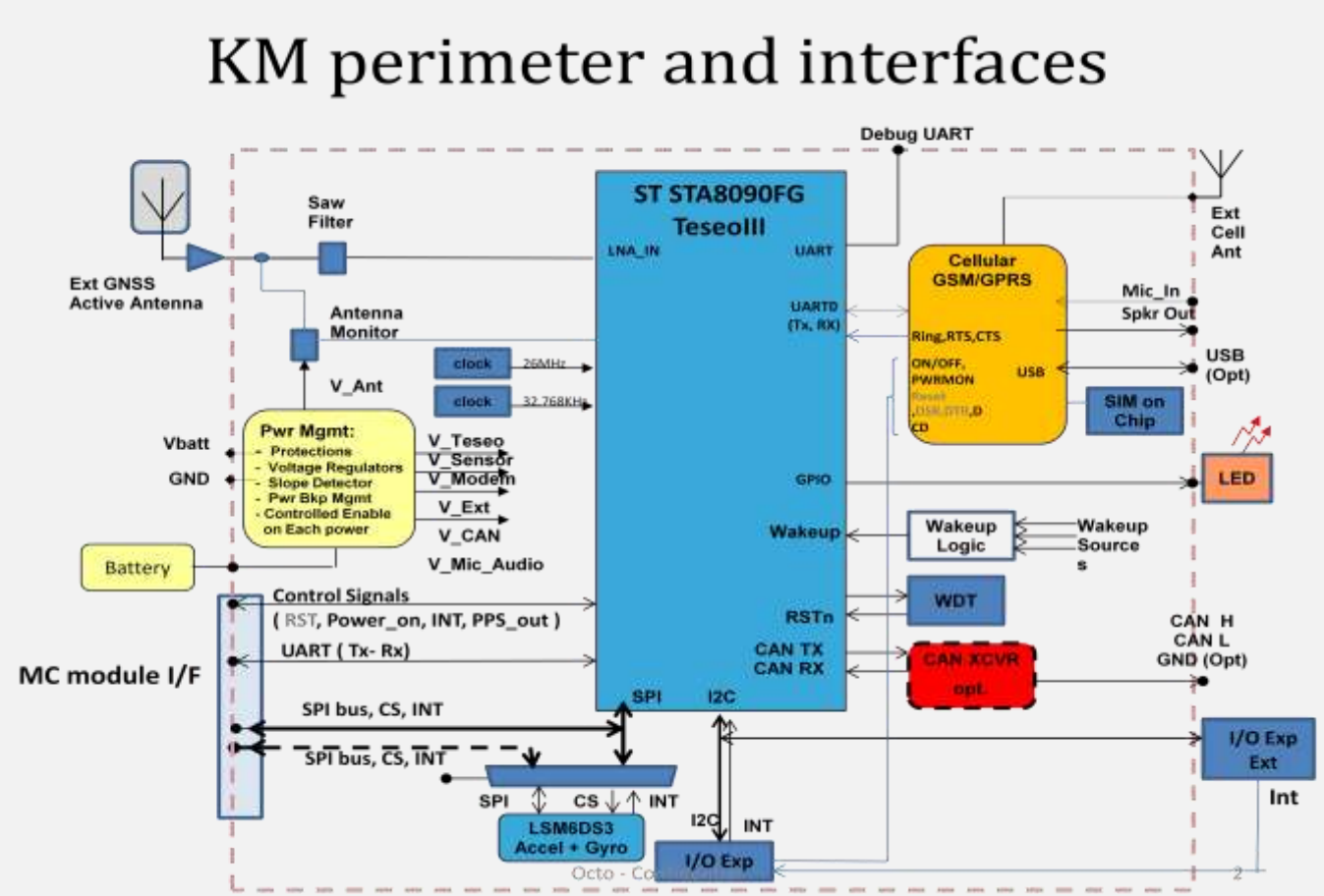

The main HW architecture features and physical constraints are summarized below:

GNSS multiconstellation, GPS+Glonass as a minimum; GSM; Accelerometer; SIM on Chip; Watch Dog; Power Management; RF transceiver; CAN Bus interface

The LED designed for MCU provided one LED with blue color on the top face of the OBU.

KM Dimensions: 44.7mm*21.7mm

All Rights reserved, No Spreading abroad without Permission of ZTEWelink

1.2 KM and OBU Diagram

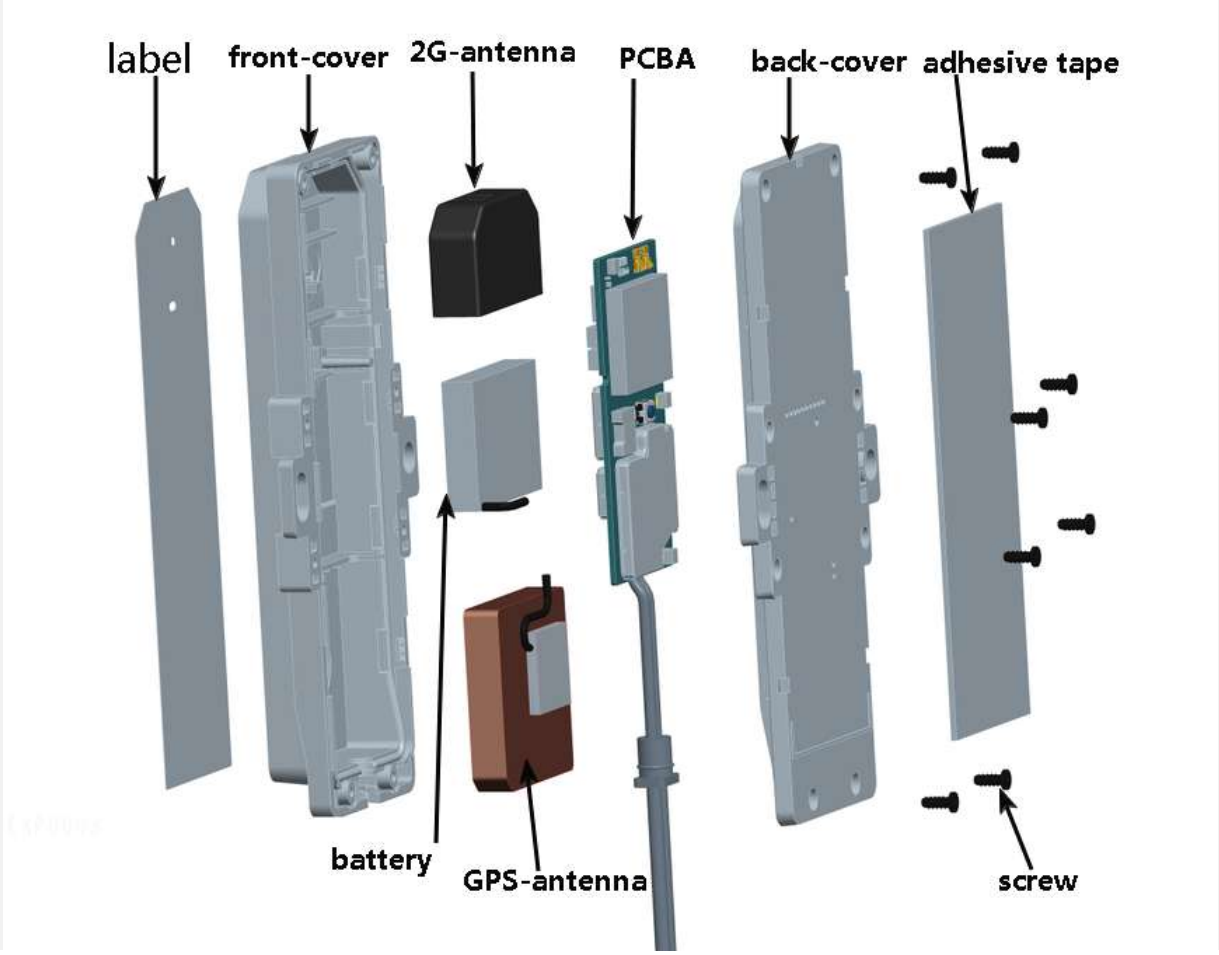

All Rights reserved, No Spreading abroad without Permission of ZTEWelink

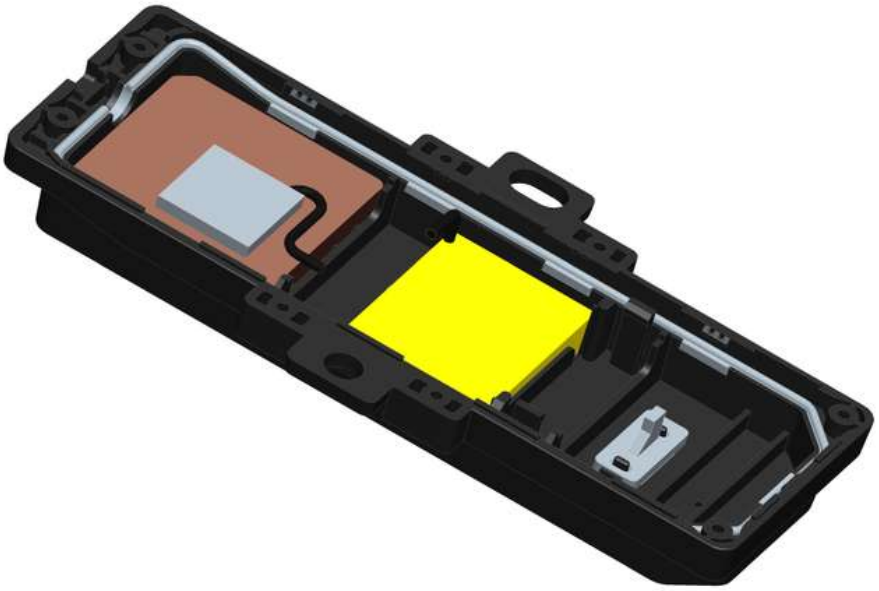

1. Assemble battery / GPS-antenna on top-cover

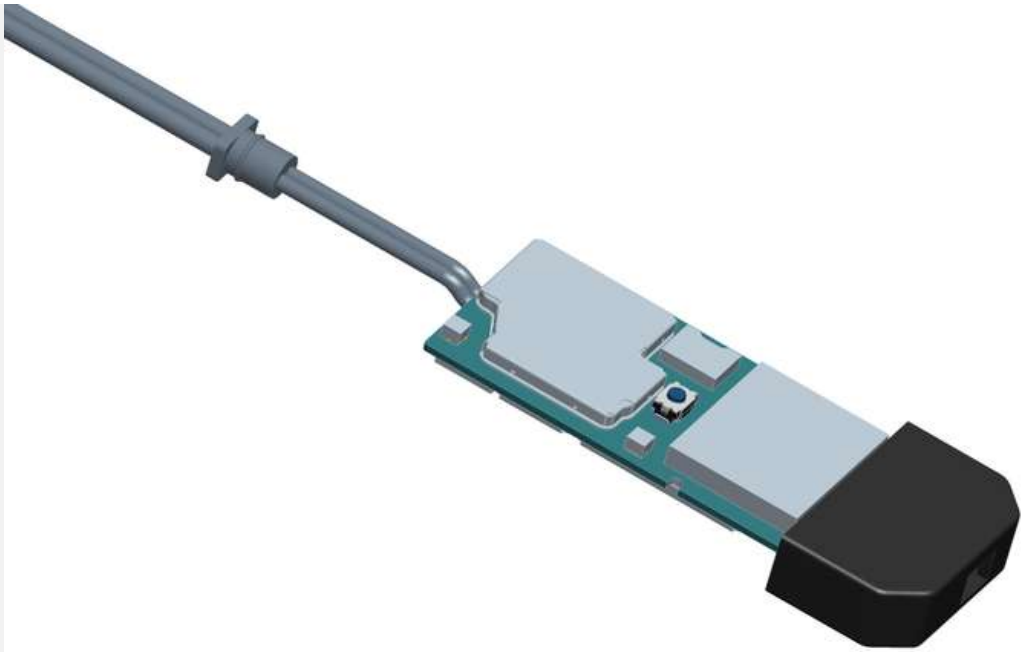

2. Assemble power cable / 2G-antenna on PCBA

All Rights reserved, No Spreading abroad without Permission of ZTEWelink

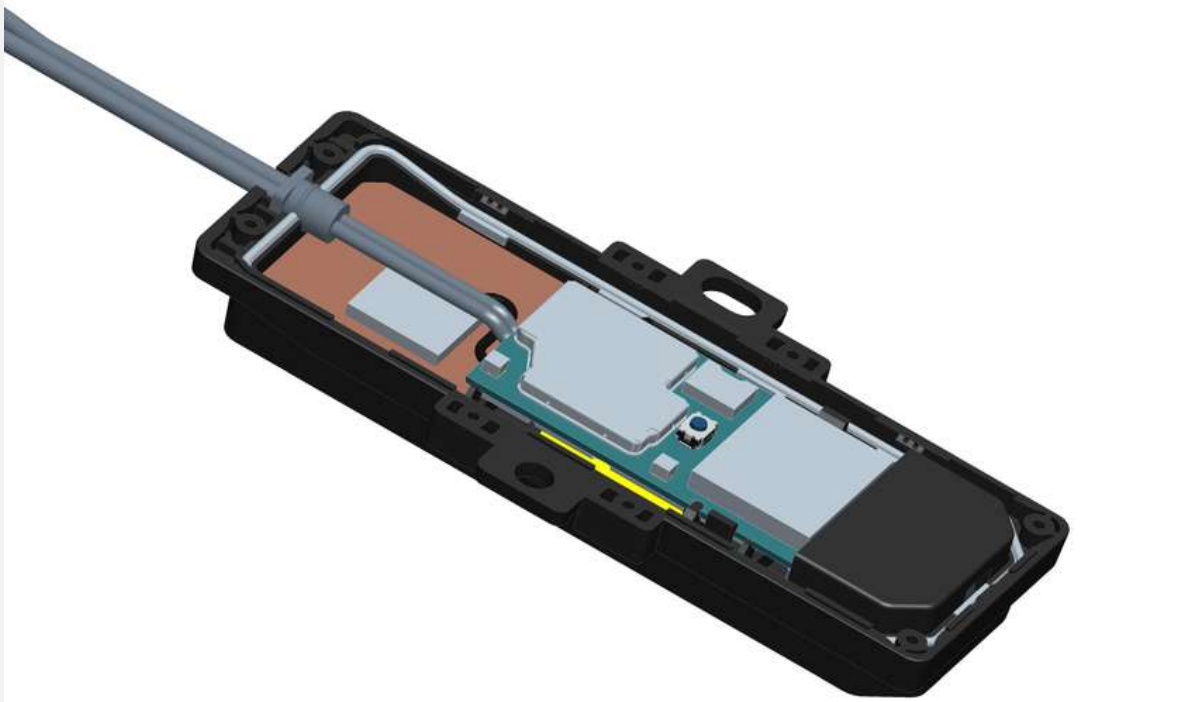

3.Assemble PCBA on top-cover and fasten connectors

4. Assemble back-cover on top-cover and fasten screws

All Rights reserved, No Spreading abroad without Permission of ZTEWelink

Note: The figure is only for reference. The actual color of the product maybe difference slightly.

1.3 Power Management

The KM power management provides the items as follows:

Power Protection to be compliant E-mark;

Voltage Regulators to feed the different modules;

Slope Voltage Detector implemented only via Hw components;

Power backup management, the power back-up could be implemented via battery back-up or super-cap;

Voltage and temperature measurements for battery back-up management;

Voltage measurements of the vehicle battery.

All Rights reserved, No Spreading abroad without Permission of ZTEWelink

The KM power management permits to cut off the battery back-up, if any, in order to switch off completely the board in case of absence of vehicle battery (transport mode), and permits an HW restart via signal from MCU/GNSS (power cycle)

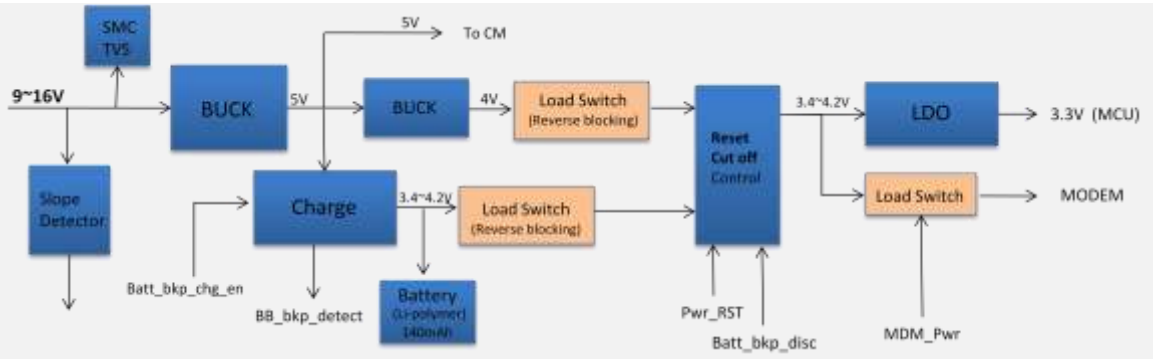

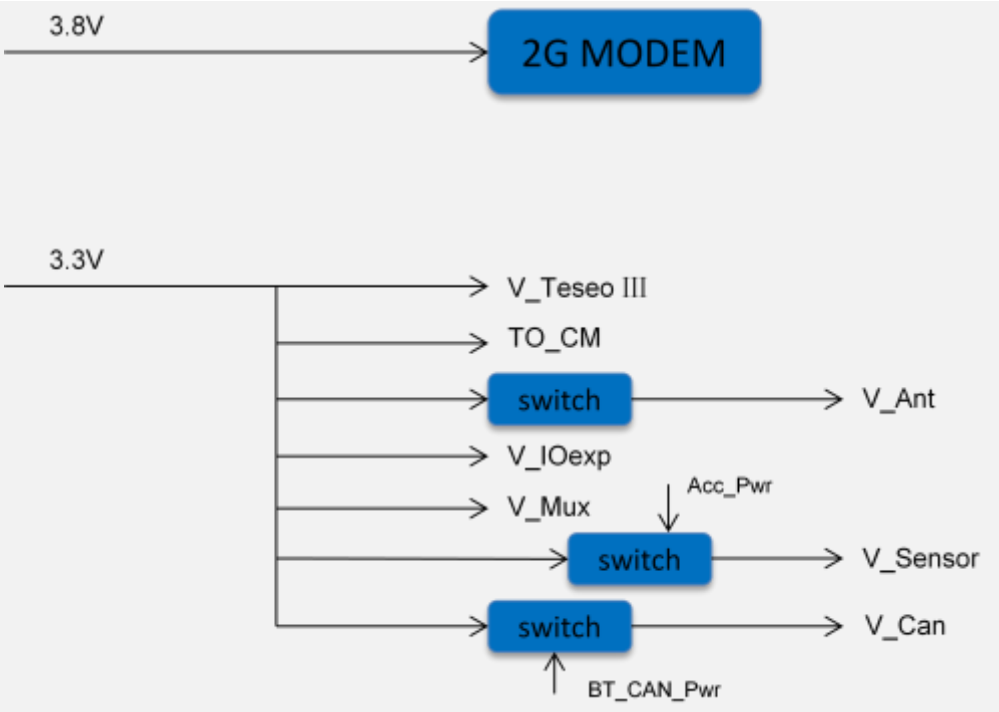

All Rights reserved, No Spreading abroad without Permission of ZTEWelink

1.4 KM interfaces and components

1.4.1 STA8090FG

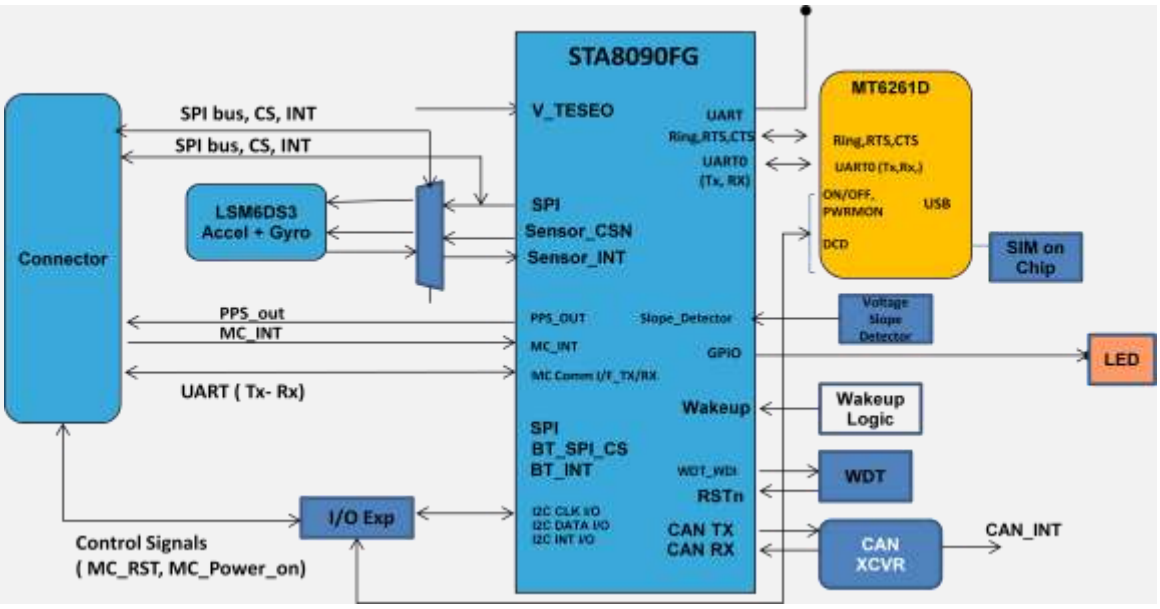

1.4.2 Modem

The GSM/GPRS platform supports the follows:

UART (FULL: Tx,Rx,CTS,RTS,DSR,DTR,DCD) and UART (Tx,Rx)

In AT21 project, Tx,Rx,CTS,RTS,DCD is available.

USB, Power Monitor, On/off, Reset and Ring

Quad-band GSM/GPRS 850/900/1800/1900 MHz

GPRS class 10, Mobile station class B, Coding scheme 1 to 4

TCP/IP, HTTP, FTP, SMS, Call, Supplementary Services

SIM application toolkit 3GPP TS 51.014

Analog audio

All Rights reserved, No Spreading abroad without Permission of ZTEWelink

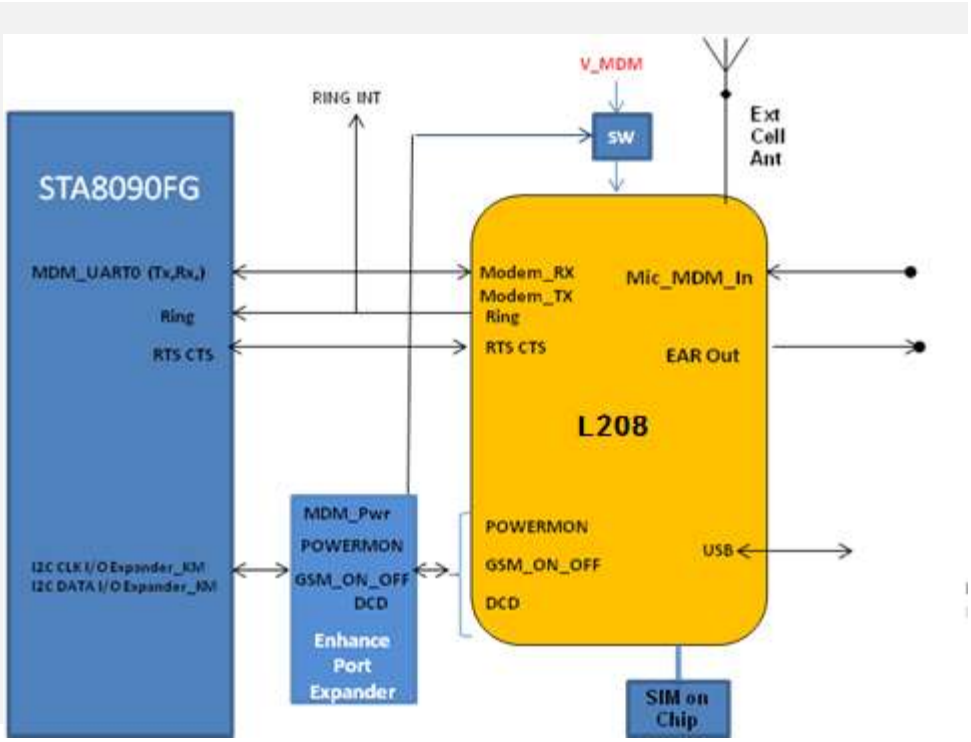

All Rights reserved, No Spreading abroad without Permission of ZTEWelink

1.4.3 Accelerometer & Gyro

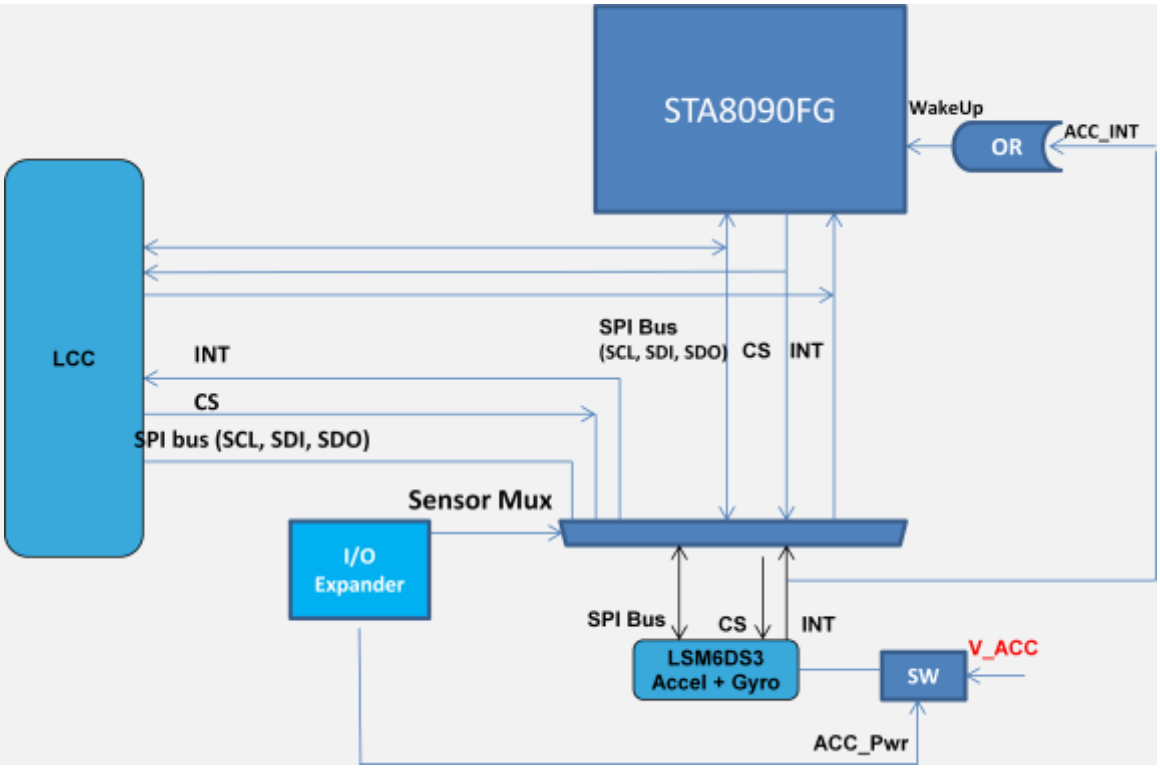

GNSS RF

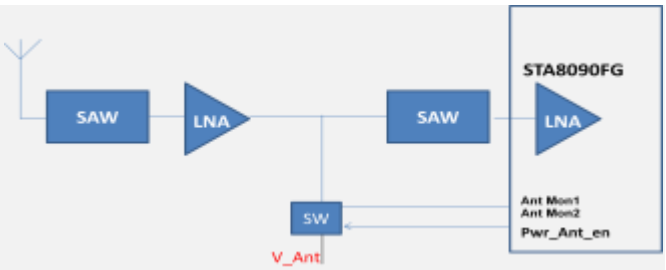

1.5 KM Operating Temperatures

Description	Values
Normal operation（without backup battery）	-30℃ to +75℃
Extended operation （without backup battery）	-40℃ to +85℃

All Rights reserved, No Spreading abroad without Permission of ZTEWelink

Storage（without backup battery）	-40℃ to +95℃

Note: The table above lists the extreme working conditions for the KM product. Under the extreme temperature range(-30℃ to -40℃/+75℃ to +85℃), the quality of data communication is affected to a certain extent, but its normal function is not affected. Using the KM beyond these conditions may result in permanent damage to the device.

This product under normal use is located on the car battery with car and more than 20cm from the human body. please refer to the following using general view.

All Rights reserved, No Spreading abroad without Permission of ZTEWelink

2 KM Schematic and PCB

2.1 KM Schematic

2.2 KM PCB

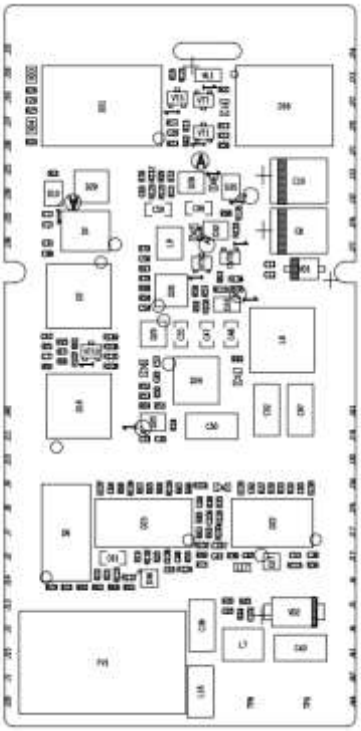

Top

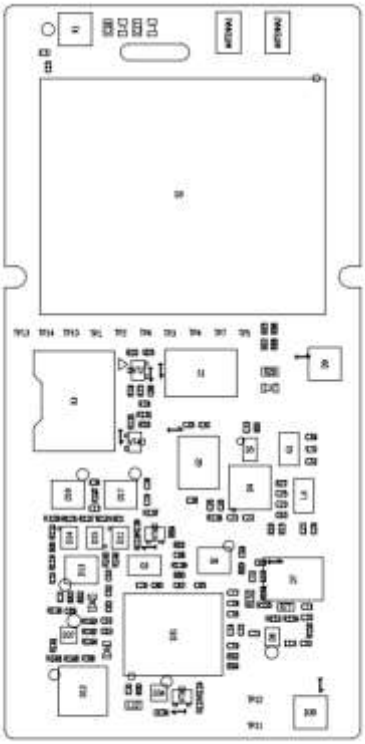

Bottom

All Rights reserved, No Spreading abroad without Permission of ZTEWelink

● Federal Communication Commission Interference Statement

This device complies with Part 15 of the FCC Rules. Operation is subject to the following two conditions: (1) This device may not cause harmful interference, and (2) this device must accept any interference received, including interference that may cause undesired operation.

This equipment has been tested and found to comply with the limits for a Class B digital device, pursuant to Part 15 of the FCC Rules. These limits are designed to provide reasonable protection against harmful interference in a residential installation. This equipment generates, uses and can radiate radio frequency energy and, if not installed and used in accordance with the instructions, may cause harmful interference to radio communications. However, there is no guarantee that interference will not occur in a particular installation. If this equipment does cause harmful interference to radio or television reception, which can be determined by turning the equipment off and on, the user is encouraged to try to correct the interference by one of the following measures:

- Reorient or relocate the receiving antenna.
- Increase the separation between the equipment and receiver.
- Connect the equipment into an outlet on a circuit different from thatto which the receiver is connected.
- It is recommend to be installed and used with the help of dealer or professional technician

FCC Caution:

Any changes or modifications not expressly approved by the party responsible for compliance could void the user's authority to operate this equipment.

Radiation Exposure Statement:

This equipment complies with FCC radiation exposure limits set forth for an uncontrolled environment. This equipment should be installed and operated with minimum distance 20cm between the radiator & your body.

FCC ID: 2AHR8-ZTEAT21

All Rights reserved, No Spreading abroad without Permission of ZTEWelink

● Industry Canada statement

❶ This device complies with Industry Canada license-exempt RSS standard(s). Operation is subject to the following two conditions:

1) this device may not cause interference, and
2) this device must accept any interference, including interference that may cause undesired operation of the device.

❶ Le présent appareil est conforme aux CNR d'Industrie Canada applicables aux appareils radio exempts de licence. L'exploitation est autorisée aux deux conditions suivantes:

1) l'appareil ne doit pas produire de brouillage, et
2) l'utilisateur de l'appareil doit accepter tout brouillage radioélectrique subi, même si le brouillage est susceptible d'en compromettre le fonctionnement.

❷ This Class B digital apparatus complies with Canadian ICES-003.

❷ Cet appareil numérique de la classe B est conforme à la norme NMB-003 du Canada.

❸ This device complies with RSS-310 of Industry Canada. Operation is subject to the condition that this device does not cause harmful interference.

❸ Cet appareil est conforme à la norme RSS-310 d'Industrie Canada. L'opération est soumise à la condition que cet appareil ne provoque aucune interférence nuisible.

❹ This device and its antenna(s) must not be co-located or operating in conjunction with any other antenna or transmitter, except tested built-in radios.

❹ Cet appareil et son antenne ne doivent pas être situés ou fonctionner en conjonction avec une autre antenne ou un autre émetteur, exception faites des radios intégrées qui ont été testées.

❺ The County Code Selection feature is disabled for products marketed in the US/ Canada.

❺ La fonction de sélection de l'indicatif du pays est désactivée pour les produits commercialisés aux États-Unis et au Canada.

Radiation Exposure Statement:

This equipment complies with IC radiation exposure limits set forth for an uncontrolled environment. This equipment should be installed and operated with minimum distance 20cm between the radiator & your body.

Déclaration d'exposition aux radiations:

Cet équipement est conforme aux limites d'exposition aux rayonnements IC établies pour un environnement non contrôlé. Cet équipement doit être installé et utilisé avec un minimum de 20 cm de distance entre la source de rayonnement et votre corps.

IC: 5200A-ZTEAT21

All Rights reserved, No Spreading abroad without Permission of ZTEWelink