Model:MX4

User Manual

H.264 1080P Encoder

4X CPU Cortex-A7
4X GPU Mali-400

H.265 1080P Encoder

OTT TV BOX

4K ULTRA HD

3D

KODI

Preface

Thanks very much for choosing our TV Box. In order to make it more convenient for you to use proficiently, we provide you with a user manual. Please read it carefully before using and properly keep it for reference.

Statements

We have made every effort to provide the most current information about the product.

We do not grant any guarantees as to the contents of the present instruction manual and disclaim any implied guarantees concerning market value or suitability for specific purposes.

The information contained here is an instruction intended to enable the correct usage and maintenance of the receiver.

We reserve the right to introduce amendments, changes or translations of the user manual without prior notification thereof. For this reason, we recommend you regularly visit our website in order to obtain the latest information.

Contents

Chapter 1 System Introduction
1. 1 Key Features ---------- 01
1. 2 Environment for System ---------- 01
1. 3 Package Contents ---------- 01
Chapter 2 Remote Controller
2. 1 Introduction of Remote ---------- 02
Chapter 3 System Connection
3. 1 AV Connection ---------- 03
3. 2 HDMI Connection ---------- 03
3. 3 Startup ---------- 04
Chapter 4 Home ---------- 04
Chapter 5 Apps
5.1 PPPoE ---------- 05
5.2 Browser ---------- 06
5.3 Media Centre ---------- 06
5.4 File Browser ---------- 07
5.5 Download ---------- 07
Chapter 6 Settings
6.1 Network ---------- 08
Chapter 7 Upgrade Steps ---------- 09
Chapter 8 Trouble Shotting ---------- 12

Chapter 1 System Introduction

1. 1 Key Features

- Support many kinds of IPTV and OTT TV programmes.
- Support FHD H.265, VC-1, H.264, MPEG-2 and many other formats such as MPEG-1、MPEG-2、MPEG-4、DIVX、REALMEDIA and so on. VP9, VP8 MVC.
- Video formats include hevc, avi, mpg, vob, rmvb, mkv, m2ts ,ts and so on.
- Photo formats include JPEG, BMP, and PNG up to 80M pixels.
- Audio formats include MP3、WMA、WAV、AC3、DTS、AAC and so on.
- Support SD/SDHC/MMC cards.
- Support four USB 2.0 host connectors with maximum output current of 1.5A/5V.
- Support standard RJ45 cable network connection and wireless network connection.
- Support infrared remote controller operation.

1. 2 Environment for System

Operation : Temperature limitation: 0–40℃; Humidity limitation: 20–80%.

Storage: Temperature limitation: -20–50℃; Humidity limitation: 10–90%.

1. 3 Package Contents

Accessories	Quantity
Power adaptor	1
Remote control	1
HDMI cable	1
User manual	1

Chapter 2 Remote Controller

2. 1 Introduction of Remote

POWER:Press to standby.

MUTE:Press to turn down the volume.

PAUSE:Press to pause when playing video,music or photo.

STOP:Press to stop playing.

Mouse : Press to switch Mouse mode or remote mode.

RETURN:Press to return back to previous menu.

HOME:Fast key to go back to main menu.

Browser: Press to enter the browser.

VOL:Press to increase/decrease the volume.

Go to privious page or next page.

Navigation:Press to navigate left/right/up/down.Press ok to confirm your choice.

Number keypad 0-9:Press to input Arabic number.

MENU:Press to choose function menu of corresponding application in video,music,photo and website.

Delete:Press to backspace the input.

Chapter 3 System Connection

3. 1 AV Connection
3. 2 HDMI Connection

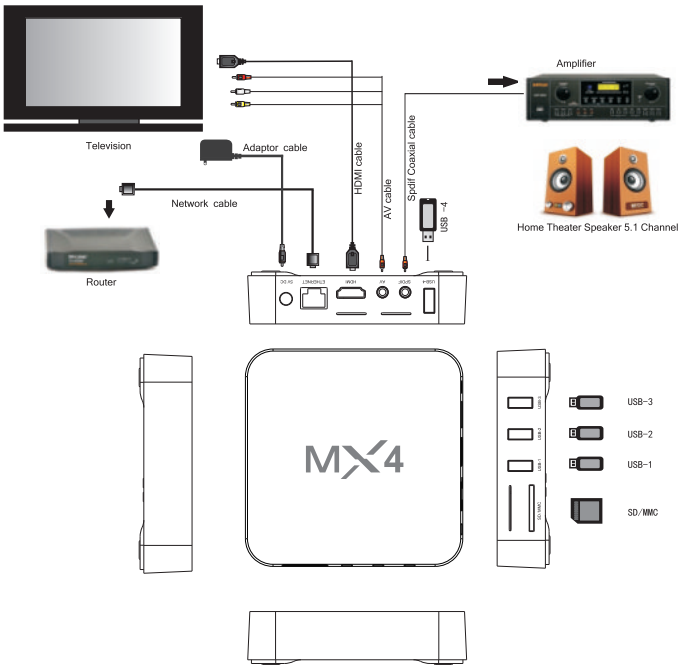

3.3 Startup

Turn on the TV box while indicator light is blue. Enter into main menu at about 30 seconds.

Chapter 4 Home

There are apps which you usually use.
You can add the apps according to your own preference.
Please tick the apps you need. Tick it again when you don't need it.

Chapter 5 My Apps

Move to “My Apps”, Press OK to enter in.
You can see icons referring to different function on the picture.

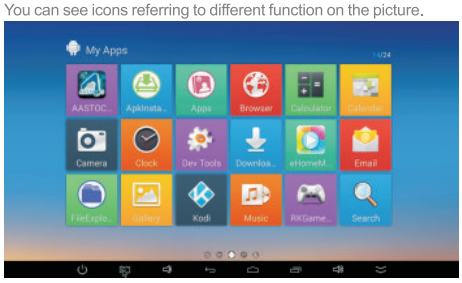

5.1 PPPoE

Move to “PPPoE” icon, Press OK to enter in. You can configure PPPoE here.

5.2 Browser

Move to “Browser”. Press OK to enter in.
It is a convenient way for you to go to your desired website.
Notice: Please go to the system setting to set the internet connection before entering into the website.

5.3 Media Center

Move to “Media Center ”icon, You can play all your prefer media here.

5.4 File Browser

Move to “File browser”. Press OK to enter into the device list.
When inserting with USB device or SD/SDHC/MMC cards, the sign “Device is mounting” will be shown on the screen.
Here you can cut, copy, paste and move the files and folder between the local disk and external storage card.

5.5 Download

Move to “Downloads”. Press OK to enter in. You can check the status here when downloading apks from the internet.

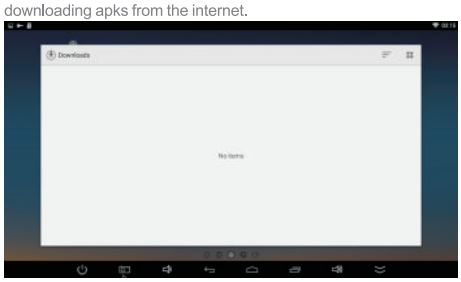

Chapter 6 Settings

6.1 Network

Wi-Fi
“Select”“Wi-Fi”, System will start scanning available Wi-Fi networks around you automatically.

Press OK to choose your Wi-Fi network and enter your password.
After authenticating IP address, when “connected” is shown, Wi-Fi is available now.

Notice: If Wi-Fi connection failed, please try again.

Chapter 7 Upgrade Steps

7.1 Please unzip the upgrade package to the SD card .There will be three files in the root of the SD card as follow,

factory_update_param.aml (Some upgrade packages don't have this file)

xxx.zip (the upgrade package zip file)

recovery

7.2 Insert HDMI cable and SD card with the box.

(connect the other side of the HDMI cable to the TV HDMI port.

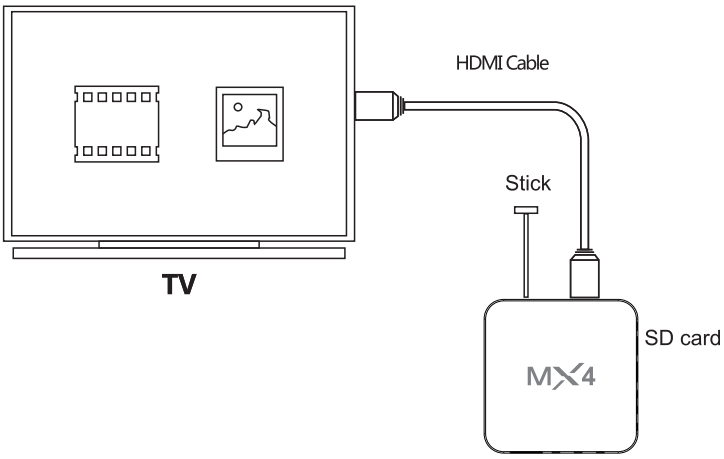

7.3 Insert a stick into AV port.

There is a reset button inside AV port.

And keep pressing the button.

7.4 Insert power adaptor.

(still pressing the button)

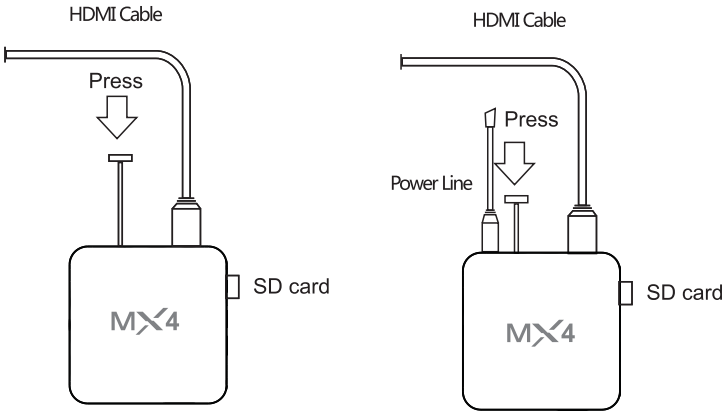

7.5 You can stop pressing the reset button until you see the android robot. And use the remote to choose " apply update from EXT " ⇨ choose " Update from sdcard" ⇨ choose " xxx.zip (the upgrade package file)" and press OK.

7.6 You will see "--Install / sdcard..." It means the box is updating.

After upgrade, you can see "Install from sdcard complete" at the bottom.

7. 7 Use remote to choose " reboot system now " and press OK or plug the power adaptor again to reboot the box.

7.8 Finished upgrade. You can see the "Welcome" interface.

Tips: You can check the build number in setting to confirm you have updated the box successfully.

7.3 Insert a stick into AV port.

There is a reset button inside AV port.

And keep pressing the button.

7.4 Insert power adaptor.

(still pressing the button)

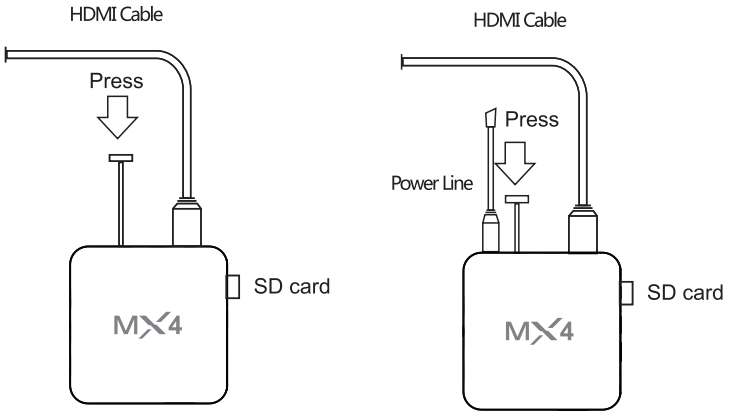

7.5 You can stop pressing the reset button until you see the android robot. And use the remote to choose " apply update from EXT " ⇨ choose " Update from sdcard" ⇨ choose " xxx.zip (the upgrade package file)" and press OK.

7.6 You will see "--Install / sdcard..." It means the box is updating.

After upgrade, you can see "Install from sdcard complete" at the bottom.

7. 7 Use remote to choose " reboot system now " and press OK

or plug the power adaptor again to reboot the box.

7.8 Finished upgrade. You can see the "Welcome" interface.

Tips: You can check the build number in setting to confirm you have updated the box successfully.

Chapter 8 Specification

Parameters / Item		Android TV Box
Main function	On-line video (IPTV and OTT TV programs)	Many IPTV programmes, all standard IPTV softwares and popular on-line video websites based on android system. (such as Youtube, Netflix, local satellite TVs, sports, finance,etc). It can also connect to your designated websites.
	Android applications	Support many applications from google play including web browser, google map,2D/3D games, P2P download, online video chat, email and so on. Support mouse and keyboard;Support FAT16 ,FAT32,NTFS file system.
	Full HD definition All formats with	H.264/H.265 high definition decoding,support all formats
Video format	1080p/720p/480p multi-format decoding	MPEG1/MPEG2/MPEG4/VC-1/H. 264//H. 265 VP9 Real Video formats including avi, mpeg, vob, mkv, ts, m2ts, wmv, rm, rmvb suffixes and so on.
Photo format	Up to 80M pixels	JPG、BMP、PNG
Audio format	Multi-audio format	MP3, WMA, WAV, MIDI, OGG, AC3, DTS(some formats need the support of the third party player software.)
Hardware configuration	Main chipset	Quad core Cortex A7
	GPU	Quad-core Mali-400
	Memory	Memory:1GB-DDR3 8GB-FLASH(other capacity available.)
Input interface	Storage cards	SD/SDHC/MMC card; Voltage: 2.7-3.3V
	USB interface	Four way high speed USB 2.0 high speed, output current up to 1. 5A/5V,connect with different kinds of mobile devices directly without additional power; Supports hot-plugging.
	Internet interface	Standard RJ45 Internet interface. Support internal wireless Wi-Fi(some other models require additional adaptor)
Output interface	Audio	Coaxial digital audio output . L/R stereo output:standard 3.5mm earphone socket.
	Video	CVBS output (AV output),Standard 3.5mm earphone socket. HDMI interface: HDMI 1.4 standard interface.
Others	Remote distance	Effective distance is more than 6 meters.
	Dimension	118x118x27(mm)
	Weight	256g
Electric parameters	Video	Range: 1.0V+/-0.1V(75Ω overload); S/N≥55dB
	Audio	Range: 2.0V+/-0.2V(10kΩ overload); S/N≥85dB
	Electric power	Power supply: 5V DC; Current: 2A.

This specification will be modified if necessary without notice.

FCC NOTE:
This device complies with Part 15 of the FCC Rules.
Operation is subject to the following two conditions: (1) this device may not cause harmful interference, and (2) this device must accept any interference received, including interference that may cause undesired operation.

THE MANUFACTURER IS NOT RESPONSIBLE FOR ANY RADIO OR TV INTERFERENCE CAUSED BY UNAUTHORIZED MODIFICATIONS OR CHANGE TO THIS EQUIPMENT. SUCH MODIFICATIONS OR CHANGE COULD VOID THE USER'S AUTHORITY TO OPERATE THE EQUIPMENT.

This equipment has been tested and found to comply with the limits for a Class B digital device, pursuant to part 15 of the FCC Rules. These limits are designed to provide reasonable protection against harmful interference in a residential installation. This equipment generates, uses and can radiate radio frequency energy and, if not installed and used in accordance with the instructions, may cause harmful interference to radio communications. However, there is no guarantee that interference will not occur in a particular installation. If this equipment does cause harmful interference to radio or television reception, which can be determined by turning the equipment off and on, the user is encouraged to try to correct the interference by one or more of the following measures:

-- Reorient or relocate the receiving antenna.

-- Increase the separation between the equipment and receiver.

-- Connect the equipment into an outlet on a circuit different from that to which the receiver is connected.

-- Consult the dealer or an experienced radio/TV technician for help.

This equipment complies with FCC radiation exposure limits set forth for an uncontrolled environment .The device has been evaluated to meet general RF exposure requirement. The device can be used in portable exposure condition without restriction.