RADIO TEST REPORT
FCC ID: 2AHSJRM-028

Product:	Portable Battery Speaker
Trade Mark:	ilive
Model No.:	RM-028
Serial Model:	TK-28,ISB200B, ISB310B
Report No.:	DGE200402002D01
Issue Date:	16 Apr. 2020

Prepared for

RUIMA INTERNATIONAL (HK) INDUSTRIAL CO., LIMITED
NO:5/F building 1, fuye industrial zone, No.10 Furong Road, Shiling Town,Huadu District, Guangzhou, 510800 China

Prepared by

Shenzhen NTEK Testing Technology Co., Ltd.
1/F, Building E, Fenda Science Park, Sanwei Community,
Xixiang Street Bao'an District, Shenzhen P.R. China
Tel.: +86-755-6115 9388
Fax.: +86-755-6115 6599
Website:http://www.ntek.org.cn

TABLE OF CONTENTS

1.TEST RESULT CERTIFICATION **3**

2.SUMMARY OF TEST RESULTS **4**

3.FACILITIES AND ACCREDITATIONS **5**

3.1. FACILITIES 5
3.2.LABORATORY ACCREDITATIONS AND LISTINGS 5
3.3.MEASUREMENT UNCERTAINTY 5

4.GENERAL DESCRIPTION OF EUT **6**

5.DESCRIPTION OF TEST MODES **8**

6.SETUP OF EQUIPMENT UNDER TEST **9**

6.1.BLOCK DIAGRAM CONFIGURATION OF TEST SYSTEM 9
6.2.SUPPORT EQUIPMENT 10
6.3.EQUIPMENTS LIST FOR ALL TEST ITEMS 11

7.TEST REQUIREMENTS **13**

7.1.CONDUCTED EMISSIONS TEST 13
7.2.RIATED SPURIOUS EMISSION 16
7.3.NUMBER OF HOPPING CHANNEL 24
7.4.HOPPING CHANNEL SEPARATION MEASUREMENT 26
7.5.AVERAGE TIME OF OCCUPANCY (DWELL TIME) 29
7.6.20DB BANDWIDTH TEST 32
7.7.PEAK OUTPUT POWER 35
7.8.CONDUCTED BAND EDGE MEASUREMENT 38
7.9.ANTENNA APPLICATION 44

1.TEST RESULT CERTIFICATION

Applicant's name.....:	RUIMA INTERNATIONAL (HK) INDUSTRIAL CO., LIMITED
Address.....:	NO:5/F building 1, fuye industrial zone, No.10 Furong Road, Shiling Town,Huadu District, Guangzhou, 510800 China
Manufacturer's Name..... :	GUANGZHOU RUIMA ELECTRONICS CO.,LIMITED
Address.....:	5/F building 1, fuye industrial zone, No.10 Furong Road, Shiling Town,Huadu District, Guangzhou, 510800 China
Product description	
Product name.....:	Portable Battery Speaker
Model and/or type reference ..... :	RM-028
Serial Model..... :	TK-28 , ISB200B , ISB310B

Measurement Procedure Used:

APPLICABLE STANDARDS	
STANDARD/ TEST PROCEDURE	TEST RESULT
FCC Part 15.247	Complied

This device described above has been tested by Shenzhen NTEK Testing Technology Co., Ltd., and the test results show that the equipment under test (EUT) is in compliance with the FCC requirements.And it is applicable only to the tested sample identified in the report.
This report shall not be reproduced except in full, without the written approval of Shenzhen NTEK Testing Technology Co., Ltd., this document may be altered or revised by Shenzhen NTEK Testing Technology Co., Ltd., personnel only, and shall be noted in the revision of the document.

The test results of this report relate only to the tested sample identified in this repor

Date of Test : 10 Apr. 2020 ~ 16 Apr. 2020

Testing Engineer : Estelle. Chen

(Estelle Chen)

Technical Manager : Murphy. Chen

(Murphy Chen)

Authorized Signatory : Wetow Huang

(Wetow Huang)

2.SUMMARY OF TEST RESULTS

FCC Part15 (15.247), Subpart C			
Standard Section	**Test Item**	**Verdict**	**Remark**
15.247 (b)(1)	Peak Output Power	PASS	
15.247 (a)(1)	20 dB Bandwidth	PASS	
15.247 (d)	Conducted Spurious Emission	PASS	
15.209	Radiated Emission	PASS	
15.247 (a)(1)(iii)	Number of Hopping Frequency	PASS	
15.247 (a)(1)(iii)	Time of Occupancy	PASS	
15.247 (a)(1)	Frequency Separation	PASS	
15.207	Conducted Emission	PASS	

Remark:
1. “N/A” denotes test is not applicable in this Test Report.
2. All test items were verified and recorded according to the standards and without any deviation during the test.
3. This EUT has also been tested and complied with the requirements of FCC Part 15, Subpart C, recorded in a separate test report.

3.FACILITIES AND ACCREDITATIONS

3.1. FACILITIES

All measurement facilities used to collect the measurement data are located at
1/F, Building E, Fenda Science Park, Sanwei Community, Xixiang Street Bao'an District, Shenzhen 518126 P.R. China
The sites are constructed in conformance with the requirements of ANSI C63.7, ANSI C63.10 and CISPR Publication 22.

3.2.LABORATORY ACCREDITATIONS AND LISTINGS

Site Description

EMC Lab.	:	Accredited by CNAS, 2014.09.04 The Laboratory has been assessed and proved to be in compliance with CNAS-CL01:2006 (identical to ISO/IEC 17025:2005) The Certificate Registration Number is L5516. Accredited by FCC, September 6, 2013 The Certificate Registration Number is 238937. Accredited by Industry Canada, August 29, 2012 The Certificate Registration Number is 9270A-1.
Name of Firm	:	Shenzhen NTEK Testing Technology Co., Ltd
Site Location	:	1/F, Building E, Fenda Science Park, Sanwei Community, Xixiang Street, Bao'an District, Shenzhen 518126 P.R. China.

3.3.MEASUREMENT UNCERTAINTY

The reported uncertainty of measurement y±U, where expended uncertainty U is based on a standard uncertainty multiplied by a coverage factor of k=2, providing a level of confidence of approximately 95 %.

No.	Item	Uncertainty
1	Conducted Emission Test	±1.38dB
2	RF power, conducted	±0.16dB
3	Spurious emissions, conducted	±0.21dB
4	All emissions, radiated(<1G)	±4.68dB
5	All emissions, radiated(>1G)	±4.89dB
6	Temperature	±0.5°C
7	Humidity	±2%

4.GENERAL DESCRIPTION OF EUT

Product Feature and Specification	
Equipment	Portable Battery Speaker
Trade Mark	ilive
FCC ID	2AHSJRM-028
Model No.	RM-028
Serial Model	TK-28 ,ISB200B,ISB310B
Model Difference	All the model are the same circuit and RF module, except the different colors in appearance.
Operating Frequency	2402MHz~2480MHz
Modulation	GFSK,π/4-DQPSK
Bluetooth Version	BT V4.2
Number of Channels	79 Channels
Antenna Type	PCB Antenna
Antenna Gain	1.0dBi
Power supply	☒ DC supply: DC 3.7V, 1500mAh from battery
	☒ Adapter supply: Model: Polaroid Input:100~240V 50~60Hz 0.2A Output:5V,1A
HW Version	V1.0
SW Version	V1.0

Note: Based on the application, features, or specification exhibited in User's Manual, the EUT is considered as an ITE/Computing Device. More details of EUT technical specification, please refer to the User's Manual.

Revision History

Report No.	Version	Description	Issued Date
DGE200402002D01	Rev.01	Initial issue of report	Apr 16, 2020

5.DESCRIPTION OF TEST MODES

To investigate the maximum EMI emission characteristics generates from EUT, the test system was pre-scanning tested base on the consideration of following EUT operation mode or test configuration mode which possible have effect on EMI emission level. Each of these EUT operation mode(s) or test configuration mode(s) mentioned above was evaluated respectively.
The Transmitter was operated in the normal operating mode. The TX frequency was fixed which was for the purpose of the measurements.

Test of channel included the lowest and middle and highest frequency to perform the test, then record on this report.

Those data rates (1Mbps for GFSK modulation; 2Mbps for π/4-DQPSK modulation;) were used for all test.
The EUT was pretested with 3 orientations placed on the table for the radiated emission measurement –X, Y, and Z-plane. The X-plane results were found as the worst case and were shown in this report.

Carrier Frequency and Channel list:

Channel	Frequency(MHz)
0	2402
1	2403
…	…
39	2441
40	2442
…	…
77	2479
78	2480

Note: fc=2402MHz+k×1MHz k=0 to 78
The following summary table is showing all test modes to demonstrate in compliance with the standard.

For AC Conducted Emission	
Final Test Mode	Description
Mode 1	normal link mode

Note: AC power line Conducted Emission was tested under maximum output power.

For Radiated Test Cases	
Final Test Mode	Description
Mode 1	normal link mode
Mode 2	CH00(2402MHz)
Mode 3	CH39(2441MHz)
Mode 4	CH78(2480MHz)

Note: For radiated test cases, the worst mode data rate 1Mbps was reported only, because this data rate has the highest RF output power at preliminary tests, and no other significantly frequencies found in conducted spurious emission.

For Conducted Test Cases	
Final Test Mode	Description
Mode 2	CH00(2402MHz)
Mode 3	CH39(2441MHz)
Mode 4	CH78(2480MHz)
Mode 5	Hopping mode

Note: The engineering test program was provided and the EUT was programmed to be in continuously transmitting mode.

6.SETUP OF EQUIPMENT UNDER TEST

6.1.BLOCK DIAGRAM CONFIGURATION OF TEST SYSTEM

For AC Conducted Emission Mode

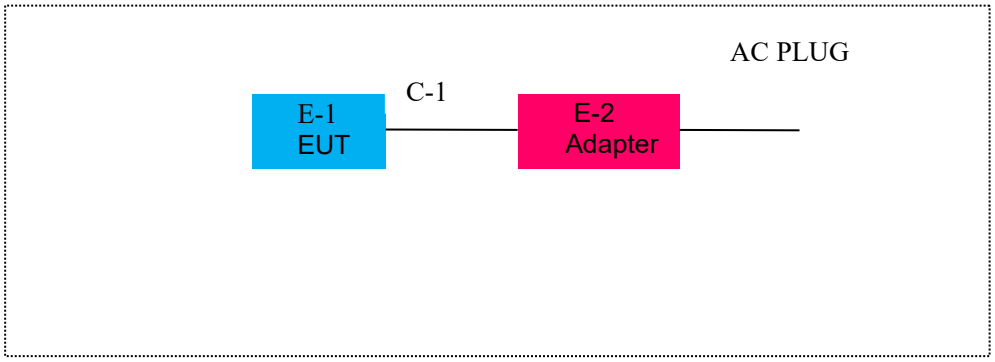

For Radiated Test Cases

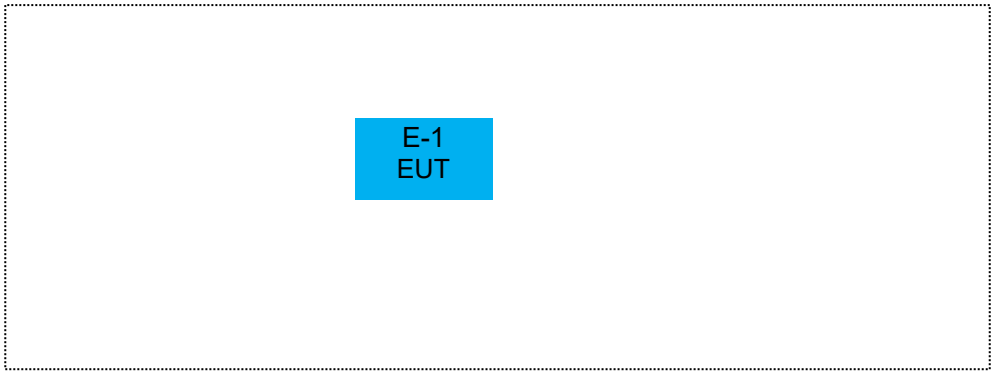

Note:

1）The temporary antenna connector is soldered on the PCB board in order to perform conducted tests and this temporary antenna connector is listed in the equipment list.

2）The adapter is used for conducted emission and radiation below 1GHz

6.2.SUPPORT EQUIPMENT

The EUT has been tested as an independent unit together with other necessary accessories or support units. The following support units or accessories were used to form a representative test configuration during the tests.

Item	Equipment	Mfr/Brand	Model/Type No.	FCC ID	Note
E-1	Portable Battery Speaker	ilive	RM-028,TK-28 ISB200B , ISB310B	2AHSJRM-028	EUT
E-2	Adapter	N/A	Polaroid	N/A	AE

Item	Cable Type	Shielded Type	Ferrite Core	Length

Notes:

(1) The support equipment was authorized by Declaration of Confirmation.
(2) For detachable type I/O cable should be specified the length in cm in『Length』column.
(3) “YES” is means “shielded” “with core”; “NO” is means “unshielded” “without core”.

6.3.EQUIPMENTS LIST FOR ALL TEST ITEMS

Radiation Test equipment

Item	Kind of Equipment	Manufacturer	Type No.	Serial No.	Last calibration	Calibrated until	Calibration period
1	Spectrum Analyzer	Agilent	E4407B	MY45108040	2019.07.06	2020.07.05	1 year
2	Spectrum Analyzer	Agilent	N9020A	MY49100060	2019.11.19	2020.11.18	1 year
3	Test Receiver	R&S	ESPI	101318	2019.06.07	2020.06.06	1 year
4	Bilog Antenna	TESEQ	CBL6111D	31216	2019.07.06	2020.07.05	1 year
5	50Ω Coaxial Switch	Anritsu	MP59B	6200264416	2019.06.07	2020.06.06	1 year
7	Horn Antenna	EM	EM-AH-10180	2011071402	2019.07.06	2020.07.05	1 year
8	Horn Ant	Schwarzbeck	BBHA 9170	9170-181	2019.07.06	2020.07.05	1 year
9	Pre-Amplifier	EMC	EMC051835 SE	980246	2019.08.09	2020.08.09	1 year
10	Loop Antenna	ARA	PLA-1030/B	1029	2019.06.08	2020.06.07	1 year
11	Test Cable (9KHz-30MHz)	N/A	R-04	N/A	2019.06.06	2020.06.05	1 year
12	Test Cable (30MHz-1GHz)	N/A	R-01	N/A	2019.07.06	2020.07.05	1 year
13	Test Cable (1-18GHz)	N/A	R-02	N/A	2019.07.06	2020.07.05	1 year
14	High Test Cable(18G-40 GHz)	N/A	R-03	N/A	2019.06.06	2020.06.05	1 year
15	temporary antenna connector (Note)	NTS	R001	N/A	N/A	N/A	N/A

Note:
We will use the temporary antenna connector (soldered on the PCB board) When conducted test
And this temporary antenna connector is listed within the instrument list

Conduction Test equipment

Item	Kind of Equipment	Manufacturer	Type No.	Serial No.	Last calibration	Calibrated until	Calibration period
1	Test Receiver	R&S	ESCI	101160	2019.06.06	2020.06.05	1 year
2	LISN	R&S	ENV216	101313	2019.08.24	2020.08.23	1 year
3	LISN	EMCO	3816/2	00042990	2019.08.24	2020.08.23	1 year
4	50Ω Coaxial Switch	Anritsu	MP59B	6200264417	2019.06.07	2020.06.06	1 year
7	Test Cable (9KHz-30MHz)	N/A	C01	N/A	2019.06.08	2020.06.07	1 year
8	Test Cable (9KHz-30MHz)	N/A	C02	N/A	2019.06.08	2020.06.07	1 year
9	Test Cable (9KHz-30MHz)	N/A	C03	N/A	2019.06.08	2020.06.07	1 year

Note: Each piece of equipment is scheduled for calibration once a year.

7.TEST REQUIREMENTS

7.1.CONDUCTED EMISSIONS TEST

7.1.1.Applicable Standard

According to FCC Part 15.247 (d)

7.1.2.Conformance Limit

Frequency(MHz)	Conducted Emission Limit	
	Quasi-peak	Average
0.15-0.5	66-56*	56-46*
0.5-5.0	56	46
5.0-30.0	60	50

Note: 1. *Decreases with the logarithm of the frequency
2. The lower limit shall apply at the transition frequencies
3. The limit decreases in line with the logarithm of the frequency in the range of 0.15 to 0.50MHz.

7.1.3.Test Configuration

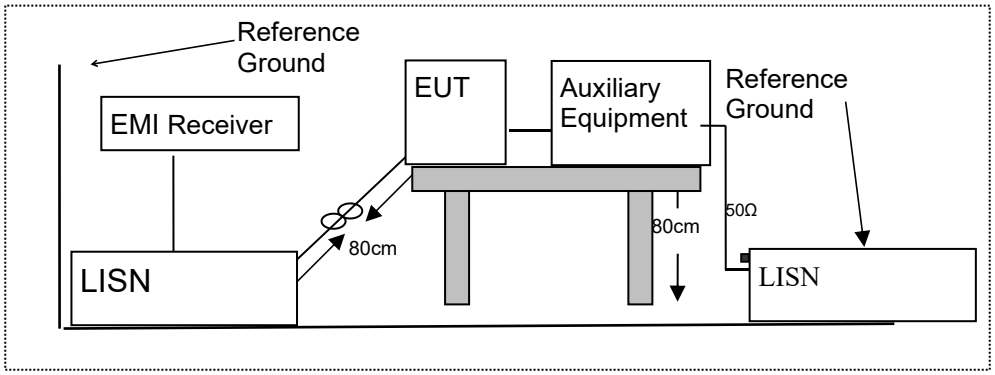

7.1.4.Test Procedure

According to the requirements in Section 13.1.4.1 of ANSI C63.10-2013 Conducted emissions the EUT measured in the frequency range between 0.15 MHz and 30 MHz using CISPR Quasi-Peak and average detector mode.

1. The EUT was placed 0.4 meter from the conducting wall of the shielding room.
2. The EUT was placed on a table which is 0.8m above ground plane.
3. Connect EUT to the power mains through a line impedance stabilization network (LISN). All other support equipments powered from additional LISN(s). The LISN provide 50 Ohm/ 50uH of coupling impedance for the measuring instrument.
4. Interconnecting cables that hang closer than 40 cm to the ground plane shall be folded back and forth in the center forming a bundle 30 to 40cm long.
5. I/O cables that are not connected to a peripheral shall be bundled in the center. The end of the cable may be terminated, if required, using the correct terminating impedance. The overall length shall not exceed 1 m.
6. LISN at least 80 cm from nearest part of EUT chassis.
7. The frequency range from 150KHz to 30MHz was searched.
8. Set the test-receiver system to Peak Detect Function and specified bandwidth(IF bandwidth=9KHz) with Maximum Hold Mode
9. For the actual test configuration, please refer to the related Item –EUT Test Photos.

7.1.5.Test Results

Pass

7.1.6.Test Results

EUT：	Portable Battery Speaker	Model Name ：	RM-028
Temperature：	26 ℃	Relative Humidity：	54%
Pressure：	1010hPa	Phase :	L
Test Voltage ：	DC 5V from Adapter AC 120V/60Hz	Test Mode：	Mode 1

Frequency (MHz)	Reading Level (dBμV)	Correct Factor (dB)	Measure-ment (dBμV)	Limits (dBμV)	Margin (dB)	Remark
0.1620	35.71	9.94	45.65	65.36	-19.71	QP
0.1620	22.99	9.94	32.93	55.36	-22.43	AVG
0.1819	33.40	9.91	43.31	64.40	-21.09	QP
0.1819	21.54	9.91	31.45	54.40	-22.95	AVG
0.5340	19.51	9.93	29.44	46.00	-16.56	AVG
0.5380	31.28	9.93	41.21	56.00	-14.79	QP
0.5740	30.28	9.93	40.21	56.00	-15.79	QP
0.5780	19.03	9.93	28.96	46.00	-17.04	AVG
1.6300	16.43	10.01	26.44	46.00	-19.56	AVG
12.6580	27.79	11.53	39.32	60.00	-20.68	QP
13.7020	14.51	11.74	26.25	50.00	-23.75	AVG
14.3100	27.51	11.81	39.32	60.00	-20.68	QP

Remark:
1. All readings are Quasi-Peak and Average values.
2. Factor = Insertion Loss + Cable Loss.

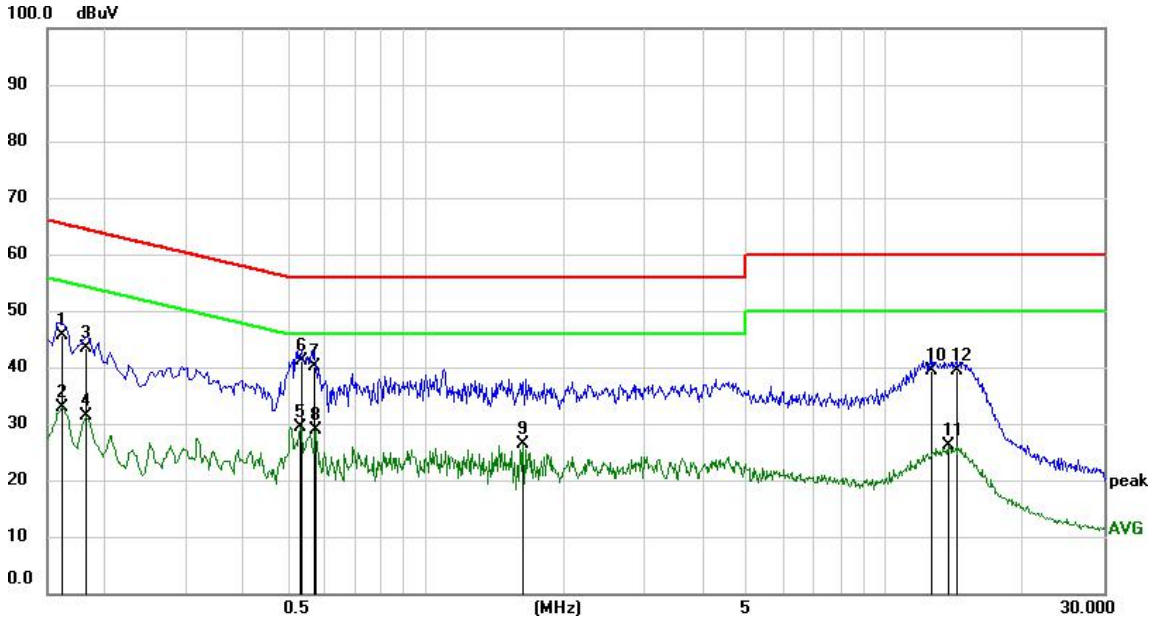

EUT：	Portable Battery Speaker	Model Name ：	RM-028
Temperature：	26 ℃	Relative Humidity：	54%
Pressure：	1010hPa	Phase :	N
Test Voltage ：	DC 5V from Adapter AC 120V/60Hz	Test Mode：	Mode 1

Frequency (MHz)	Reading Level (dBμV)	Correct Factor (dB)	Measure-ment (dBμV)	Limits (dBμV)	Margin (dB)	Remark
0.1539	38.72	9.93	48.65	65.79	-17.14	QP
0.1580	27.72	9.93	37.65	55.57	-17.92	AVG
0.2460	27.42	9.90	37.32	61.89	-24.57	QP
0.5060	24.87	9.94	34.81	46.00	-11.19	AVG
0.5500	29.61	9.94	39.55	46.00	-6.45	QP
0.5540	33.62	9.94	43.56	56.00	-12.44	AVG
0.7260	20.17	9.96	30.13	46.00	-15.87	QP
0.9300	20.14	9.97	30.11	46.00	-15.89	AVG
1.0820	26.68	9.97	36.65	56.00	-19.35	QP
2.3699	22.60	10.05	32.65	56.00	-23.35	AVG
12.8500	25.92	11.53	37.45	60.00	-22.55	QP
13.6540	13.06	11.68	24.74	50.00	-25.26	AVG

Remark:

1. All readings are Quasi-Peak and Average values.
2. Factor = Insertion Loss + Cable Loss.

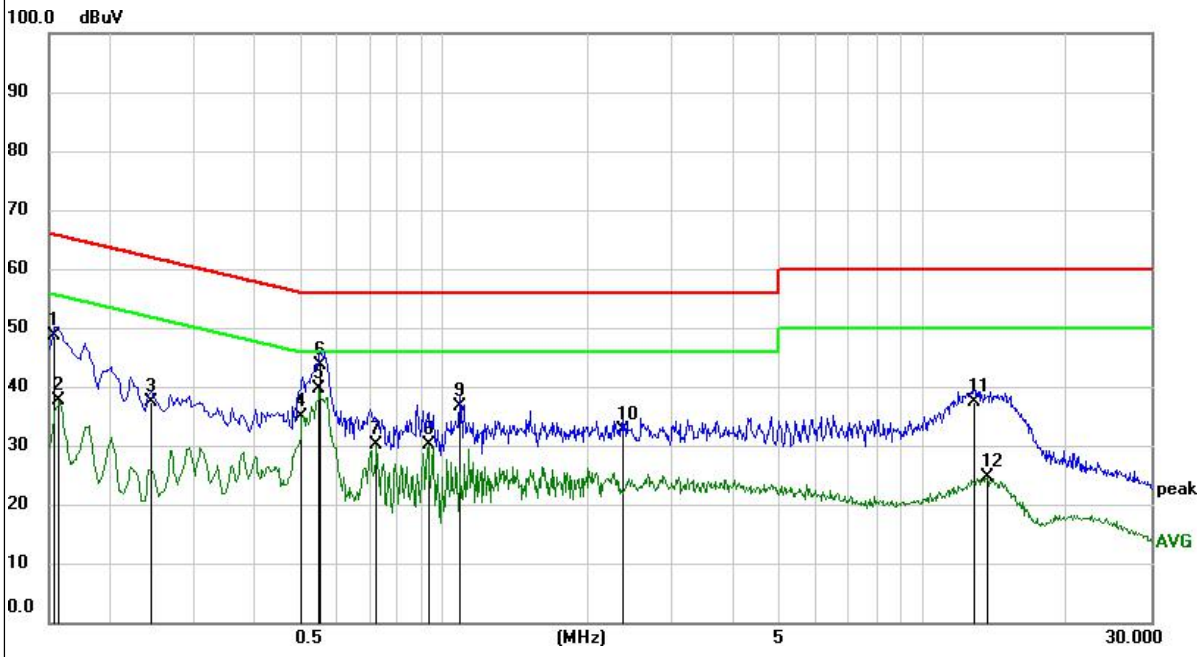

7.2.RIATED SPURIOUS EMISSION

7.2.1.Applicable Standard

According to FCC Part **15.209**

7.2.2.Conformance Limit

15.209 Limit in the below table has to be followed:

Restricted Frequency(MHz)	Field Strength (μV/m)	Field Strength (dBμV/m)	Measurement Distance
0.009~0.490	2400/F(KHz)	20 log (uV/m)	300
0.490~1.705	2400/F(KHz)	20 log (uV/m)	30
1.705~30.0	30	29.5	30
30-88	100	40	3
88-216	150	43.5	3
216-960	200	46	3
Above 960	500	54	3

Limits of Radiated Emission Measurement(Above 1000MHz)

Frequency(MHz)	Class B (dBuV/m) (at 3M)	
	PEAK	AVERAGE
Above 1000	74	54

Remark :1. Emission level in dBuV/m=20 log (uV/m)
2. Measurement was performed at an antenna to the closed point of EUT distance of meters.
3. Distance extrapolation factor =40log(Specific distance/ test distance)(dB);
Limit line=Specific limits(dBuV) + distance extrapolation factor.

7.2.3.Measuring Instruments

The Measuring equipment is listed in the section 6.3 of this test report.

7.2.4.Test Configuration

(a) For radiated emissions below 30MHz

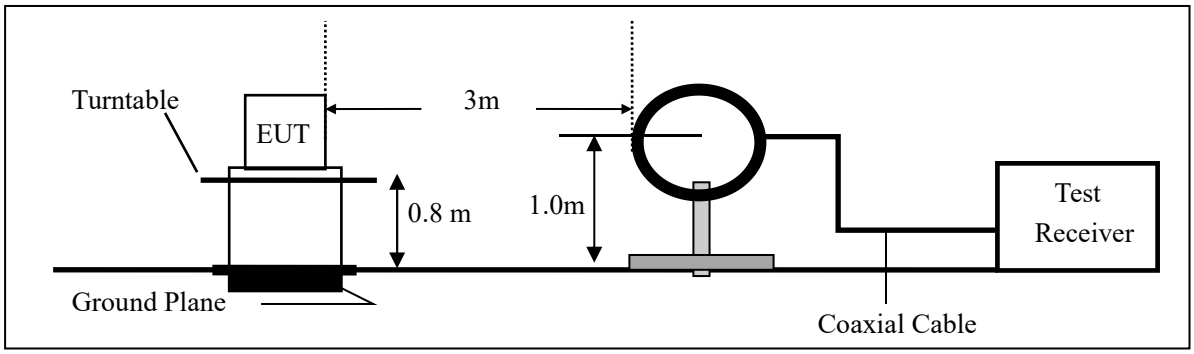

(b) For radiated emissions from 30MHz to 1000MHz

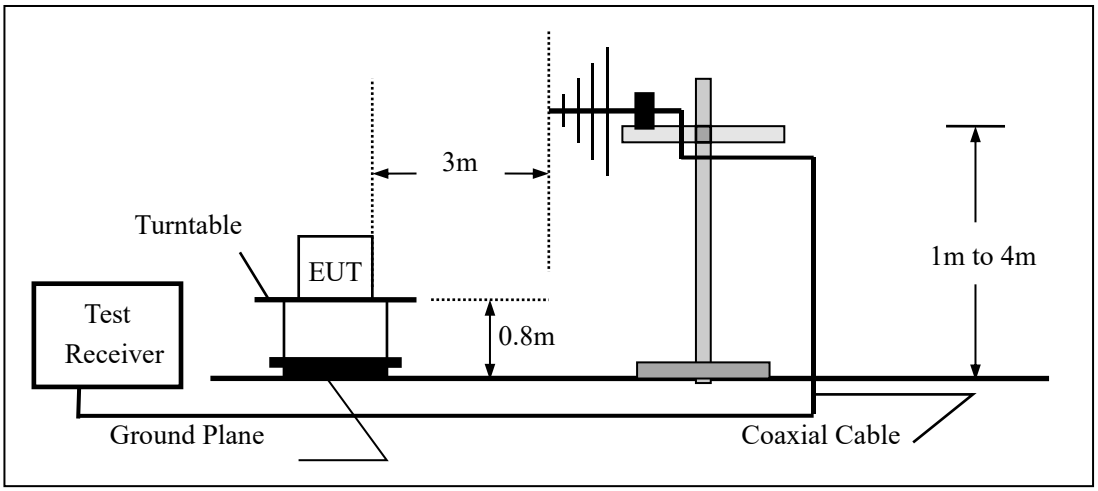

(c) For radiated emissions above 1000MHz

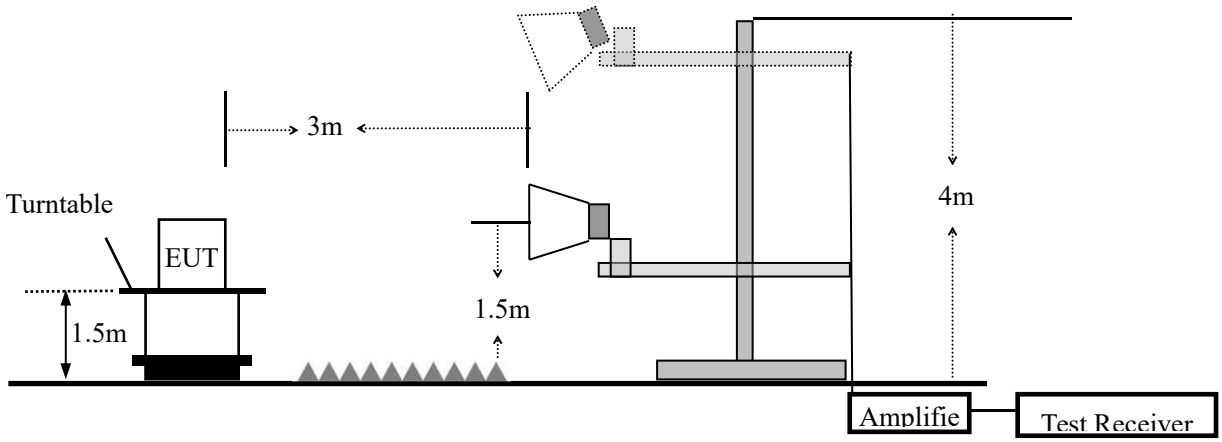

7.2.5.Test Procedure

Spectrum Parameter	Setting
Attenuation	Auto
Start Frequency	1000 MHz
Stop Frequency	10th carrier harmonic
RB / VB (emission in restricted band)	1 MHz / 1 MHz for Peak, 1 MHz / 10Hz for Average

Receiver Parameter	Setting
Attenuation	Auto
Start ~ Stop Frequency	9kHz~150kHz / RB 200Hz for QP
Start ~ Stop Frequency	150kHz~30MHz / RB 9kHz for QP
Start ~ Stop Frequency	30MHz~1000MHz / RB 120kHz for QP

a. The measuring distance of at 3 m shall be used for measurements at frequency up to 1GHz. For frequencies above 1GHz, any suitable measuring distance may be used.
b. The EUT was placed on the top of a rotating table 0.8 m for below 1GHz and 1.5m for above 1GHz the ground at a 3 meter. The table was rotated 360 degrees to determine the position of the highest radiation.
c. The height of the equipment or of the substitution antenna shall be 0.8 m for below 1GHz and 1.5m for above 1GHz; the height of the test antenna shall vary between 1 m to 4 m. Both horizontal and vertical polarizations of the antenna are set to make the measurement.
d. For the radiated emission test above 1GHz:
Place the measurement antenna away from each area of the EUT determined to be a source of emissions at the specified measurement distance, while keeping the measurement antenna aimed at the source of emissions at each frequency of significant emissions, with polarization oriented for maximum response. The measurement antenna may have to be higher or lower than the EUT, depending on the radiation pattern of the emission and staying aimed at the emission source for receiving the maximum signal. The final measurement antenna elevation shall be that which maximizes the emissions. The measurement antenna elevation for maximum emissions shall be restricted to a range of heights of from 1 m to 4 m above the ground or reference ground plane.
e. The initial step in collecting conducted emission data is a spectrum analyzer peak detector mode pre-scanning the measurement frequency range. Significant peaks are then marked and then Quasi Peak detector mode re-measured.
f. If the Peak Mode measured value compliance with and lower than Quasi Peak Mode Limit, the EUT shall be deemed to meet QP Limits and then no additional QP Mode measurement performed.
g. For the actual test configuration, please refer to the related Item –EUT Test Photos.

Note:

Both horizontal and vertical antenna polarities were tested
and performed pretest to three orthogonal axis. The worst case emissions were reported

During the radiated emission test, the Spectrum Analyzer was set with the following configurations:

Frequency Band (MHz)	Function	Resolution bandwidth	Video Bandwidth
30 to 1000	QP	120 kHz	300 kHz
Above 1000	Peak	1 MHz	1 MHz
	Average	1 MHz	10 Hz

Note: for the frequency ranges below 30 MHz, a narrower RBW is used for these ranges but the measured value should add a RBW correction factor (RBWCF) where RBWCF [dB] =10*lg(100 [kHz]/narrower RBW [kHz]). , the narrower RBW is 1 kHz and RBWCF is 20 dB for the frequency 9 kHz to 150 kHz, and the narrower RBW is 10 kHz and RBWCF is 10 dB for the frequency 150 kHz to 30 MHz.

7.2.6.Test Results

■ Spurious Emission below 30MHz (9KHz to 30MHz)

EUT:	PortableBatterySpeaker	Model Name ：	RM-028
Temperature:	20 ℃	Relative Humidity:	48%
Test Mode:	Mode2/Mode3/Mode4	Test By:	Eder

Freq. (MHz)	Ant.Pol. H/V	Emission Level(dBuV/m)		Limit 3m(dBuV/m)		Over(dB)	
		PK	AV	PK	AV	PK	AV
--	--	--	--	--	--	--	--

Note: the amplitude of spurious emission that is attenuated by more than 20dB below the permissible limit has no need to be reported.
Distance extrapolation factor =20log(Specific distance/ test distance)(dB);
Limit line=Specific limits(dBuV) + distance extrapolation factor

■ Spurious Emission below 1GHz (30MHz to 1GHz)
All the modulation modes have been tested, and the worst result was report as below:

EUT：	PortableBatterySpeaker	Model Name ：	RM-028
Temperature：	20 ℃	Relative Humidity：	48%
Pressure：	1010hPa	Test Mode：	Mode 1
Test Voltage ：	DC 5V from Adapter AC 120V/60Hz		

Polar (H/V)	Frequency (MHz)	Meter Reading (dBuV)	Factor (dB)	Emission Level (dBuV/m)	Limits (dBuV/m)	Margin (dB)	Remark
V	34.6385	8.63	17.42	26.05	40.00	-13.95	QP
V	55.0274	13.81	7.09	20.90	40.00	-19.10	QP
V	157.5588	17.15	12.39	29.54	43.50	-13.96	QP
V	323.3204	15.73	16.99	32.72	46.00	-13.28	QP
V	338.4001	11.25	17.45	28.70	46.00	-17.30	QP
V	948.7610	5.93	31.37	37.30	46.00	-8.70	QP

Remark:
Absolute Level= ReadingLevel+ Factor

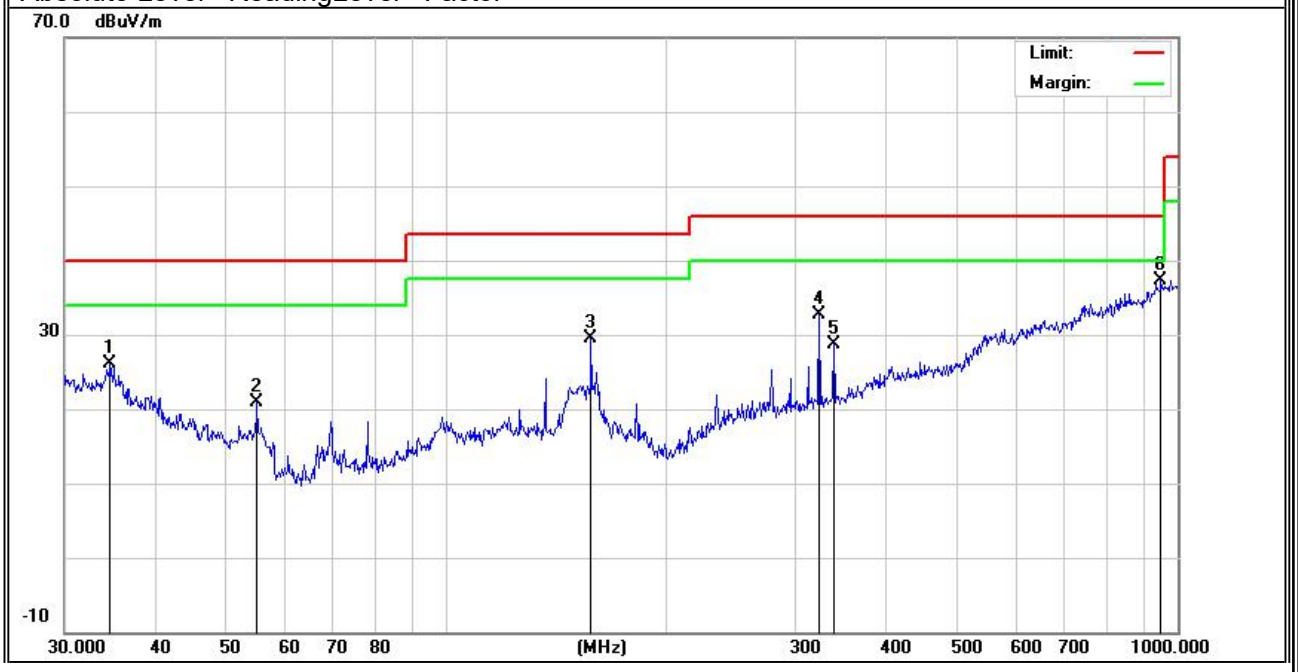

Polar (H/V)	Frequency (MHz)	Meter Reading (dBuV)	Factor (dB)	Emission Level (dBuV/m)	Limits (dBuV/m)	Margin (dB)	Remark
H	30.6379	4.06	19.55	23.61	40.00	-16.39	QP
H	157.5588	9.88	12.39	22.27	43.50	-21.23	QP
H	312.1794	12.42	16.65	29.07	46.00	-16.93	QP
H	338.4001	10.51	17.45	27.96	46.00	-18.04	QP
H	390.7225	8.23	19.78	28.01	46.00	-17.99	QP
H	962.1623	6.06	31.33	37.39	54.00	-16.61	QP

Remark:
Absolute Level= ReadingLevel+ Factor

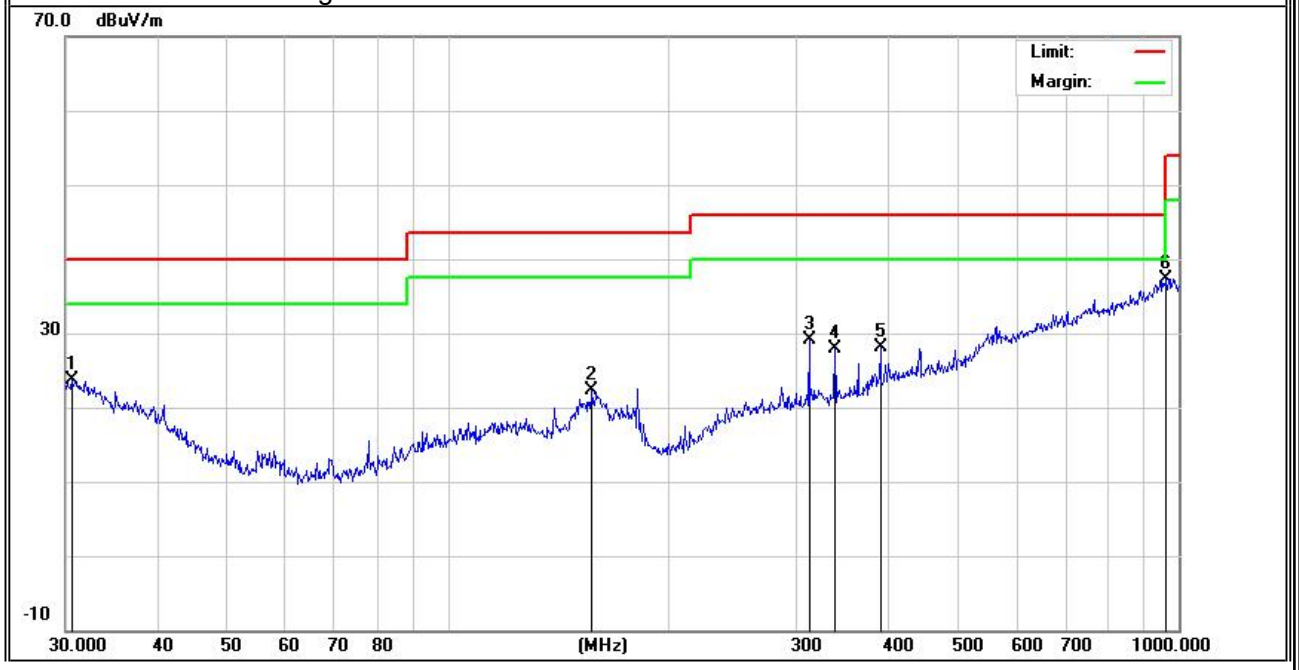

■ Spurious Emission Above 1GHz (1GHz to 25GHz)

EUT:	Portable Battery Speaker	Model Name ：	RM-028
Temperature:	20 ℃	Relative Humidity:	48%
Test Mode:	Mode2/Mode3/Mode4	Test By:	Eder

All the modulation modes have been tested, and the worst result was report as below:

Frequency (MHz)	Read Level (dBμV)	Cable loss (dB)	Antenna Factor dB/m	Preamp Factor (dB)	Emission Level (dBμV/m)	Limits (dBμV/m)	Margin (dB)	Remark	Comment
Low Channel (2402 MHz)(GFSK)--Above 1G									
4804.214	64.17	5.21	35.59	44.30	60.67	74.00	-13.33	Pk	Vertical
4804.214	41.02	5.21	35.59	44.30	37.52	54.00	-16.48	AV	Vertical
7206.265	61.61	6.48	36.27	44.60	59.76	74.00	-14.24	Pk	Vertical
7206.265	44.36	6.48	36.27	44.60	42.51	54.00	-11.49	AV	Vertical
4804.109	61.61	5.21	35.55	44.30	58.07	74.00	-15.93	Pk	Horizontal
4804.109	43.41	5.21	35.55	44.30	39.87	54.00	-14.13	AV	Horizontal
7206.224	63.37	6.48	36.27	44.52	61.60	74.00	-12.40	Pk	Horizontal
7206.224	48.47	6.48	36.27	44.52	46.70	54.00	-7.30	AV	Horizontal
Mid Channel (2441 MHz)(GFSK)--Above 1G									
4882.396	63.44	5.21	35.66	44.20	60.11	74.00	-13.89	Pk	Vertical
4882.396	42.70	5.21	35.66	44.20	39.37	54.00	-14.63	AV	Vertical
7323.241	60.36	7.10	36.50	44.43	59.53	74.00	-14.47	Pk	Vertical
7323.241	48.17	7.10	36.50	44.43	47.34	54.00	-6.66	AV	Vertical
4882.108	60.85	5.21	35.66	44.20	57.52	74.00	-16.48	Pk	Horizontal
4882.108	48.95	5.21	35.66	44.20	45.62	54.00	-8.38	AV	Horizontal
7323.132	60.16	7.10	36.50	44.43	59.33	74.00	-14.67	Pk	Horizontal
7323.132	41.44	7.10	36.50	44.43	40.61	54.00	-13.39	AV	Horizontal
High Channel (2480 MHz)(GFSK)-- Above 1G									
4960.397	66.81	5.21	35.52	44.21	63.33	74.00	-10.67	Pk	Vertical
4960.397	43.27	5.21	35.52	44.21	39.79	54.00	-14.21	AV	Vertical
7440.201	61.16	7.10	36.53	44.60	60.19	74.00	-13.81	Pk	Vertical
7440.201	45.12	7.10	36.53	44.60	44.15	54.00	-9.85	AV	Vertical
4960.225	67.26	5.21	35.52	44.21	63.78	74.00	-10.22	Pk	Horizontal
4960.225	48.61	5.21	35.52	44.21	45.13	54.00	-8.87	AV	Horizontal
7440.298	61.17	7.10	36.53	44.60	60.20	74.00	-13.80	Pk	Horizontal
7440.298	45.29	7.10	36.53	44.60	44.32	54.00	-9.68	AV	Horizontal

Note: (1) All Readings are Peak Value (VBW=3MHz) and AV Value (VBW=10Hz).
(2) Emission Level= Antenna Factor + Cable Loss + Read Level - Preamp Factor
(3)All other emissions more than 20dB below the limit.

■ Spurious Emission in Band edge

EUT:	Portable Battery Speaker	Model Name ：	RM-028
Temperature:	20 ℃	Relative Humidity:	48%
Test Mode:	Mode2/ Mode4	Test By:	Eder

All the modulation modes have been tested, and the worst result was report as below:

Frequency	Meter Reading	Cable Loss	Antenna Factor	Preamp Factor	Emission Level	Limits	Margin	Detector	Comment
(MHz)	(dBμV)	(dB)	dB/m	(dB)	(dBμV/m)	(dBμV/m)	(dB)	Type	
1Mbps(GFSK)- Non-hopping									
2310.00	58.72	2.97	27.80	43.80	45.69	74	-28.31	Pk	Horizontal
2310.00	44.91	2.97	27.80	43.80	31.88	54	-22.12	AV	Horizontal
2310.00	59.34	2.97	27.80	43.80	46.31	74	-27.69	Pk	Vertical
2310.00	41.97	2.97	27.80	43.80	28.94	54	-25.06	AV	Vertical
2390.00	58.07	3.14	27.21	43.80	44.62	74	-29.38	Pk	Vertical
2390.00	43.39	3.14	27.21	43.80	29.94	54	-24.06	AV	Vertical
2390.00	56.25	3.14	27.21	43.80	42.80	74	-31.20	Pk	Horizontal
2390.00	43.79	3.14	27.21	43.80	30.34	54	-23.66	AV	Horizontal
2483.50	58.74	3.58	27.70	44.00	46.02	74	-27.98	Pk	Vertical
2483.50	42.30	3.58	27.70	44.00	29.58	54	-24.42	AV	Vertical
2483.50	58.96	3.58	27.70	44.00	46.24	74	-27.76	Pk	Horizontal
2483.50	42.30	3.58	27.70	44.00	29.58	54	-24.42	AV	Horizontal
1Mbps (GFSK)- hopping									
2310.00	59.66	2.97	27.80	43.80	46.63	74	-27.37	Pk	Horizontal
2310.00	41.14	2.97	27.80	43.80	28.11	54	-25.89	AV	Horizontal
2310.00	60.51	2.97	27.80	43.80	47.48	74	-26.52	Pk	Vertical
2310.00	41.28	2.97	27.80	43.80	28.25	54	-25.75	AV	Vertical
2390.00	59.85	3.14	27.21	43.80	46.40	74	-27.6	Pk	Vertical
2390.00	41.13	3.14	27.21	43.80	27.68	54	-26.32	AV	Vertical
2390.00	60.52	3.14	27.21	43.80	47.07	74	-26.93	Pk	Horizontal
2390.00	42.23	3.14	27.21	43.80	28.78	54	-25.22	AV	Horizontal
2483.50	60.53	3.58	27.70	44.00	47.81	74	-26.19	Pk	Vertical
2483.50	41.31	3.58	27.70	44.00	28.59	54	-25.41	AV	Vertical
2483.50	60.50	3.58	27.70	44.00	47.78	74	-26.22	Pk	Horizontal
2483.50	41.18	3.58	27.70	44.00	28.46	54	-25.54	AV	Horizontal

Note: (1) All other emissions more than 20dB below the limit.

7.3.NUMBER OF HOPPING CHANNEL

7.3.1.Applicable Standard

According to FCC Part 15.247(a)(1) (iii)and ANSI C63.10-2013

7.3.2.Conformance Limit

Frequency hopping systems in the 2400-2483.5MHz band shall use at least 15 channels.

7.3.3.Measuring Instruments

The Measuring equipment is listed in the section 6.3 of this test report.

7.3.4.Test Setup

Please refer to Section 6.1 of this test report.

7.3.5.Test Procedure

The testing follows ANSI C63.10-2013 clause 7.8.3
The RF output of EUT was connected to the spectrum analyzer by RF cable and attenuator.
The path loss was compensated to the results for each measurement.
Set to the maximum power setting and enable the EUT transmit continuously.
The EUT must have its hopping function enabled.
Use the following spectrum analyzer settings:
Span = the frequency band of operation
RBW ≥ 1% of the span
VBW ≥ RBW
Sweep = auto
Detector function = peak
Trace = max hold

7.3.6.Test Results

EUT:	Portable Battery Speaker	Model Name ：	RM-028
Temperature:	20 ℃	Relative Humidity:	48%
Test Mode:	Mode 5(1Mbps)	Test By:	Eder

Number of Hopping (Channel)	Adaptive Frequency hopping (Channel)	limit	Verdict
79	20	⩾15	Pass

Number of Hopping Channel Plot

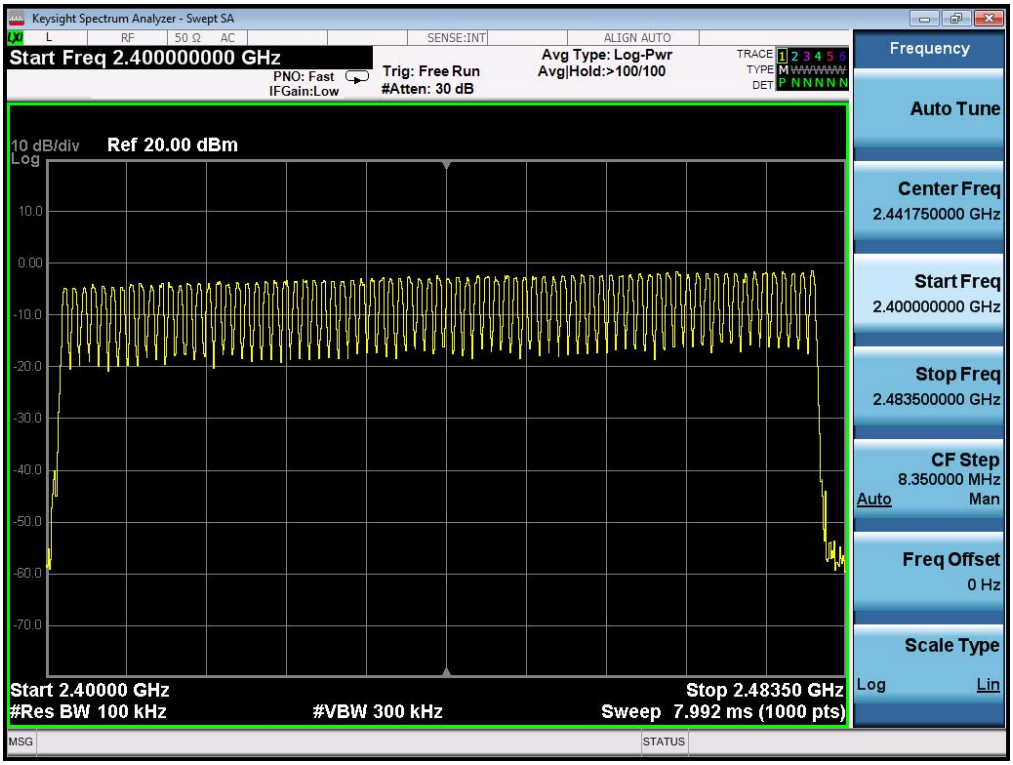

7.4.HOPPING CHANNEL SEPARATION MEASUREMENT

7.4.1.Applicable Standard

According to FCC Part 15.247(a)(1) and ANSI C63.10-2013

7.4.2.Conformance Limit

Frequency hopping systems operating in the 2400-2483.5MHz band shall have hopping channel carrier frequencies that are separated by 25kHz or two-thirds of the 20dB bandwidth of the hopping channel, whichever is greater.

7.4.3.Measuring Instruments

The Measuring equipment is listed in the section 6.3 of this test report.

7.4.4.Test Setup

Please refer to Section 6.1 of this test report.

7.4.5.Test Procedure

The testing follows ANSI C63.10-2013 clause 7.8.2
The RF output of EUT was connected to the spectrum analyzer by RF cable and attenuator.
The path loss was compensated to the results for each measurement.
Set to the maximum power setting and enable the EUT transmit continuously.
The EUT was operating in controlled its channel.
Use the following spectrum analyzer settings:
Span = Measurement Bandwidth or Channel Separation
RBW ≥ 30KHz
VBW ≥ 3*RBW
Sweep = auto
Detector function = peak
Trace = max hold

7.4.6.Test Results

EUT:	Portable Battery Speaker	Model Name ：	RM-028
Temperature:	20 ℃	Relative Humidity:	48%
Test Mode:	Mode 2	Test By:	Eder

CHANNEL	CHANNEL SEPARATION	LIMIT
	KHz	KHz
CH00-CH01	993.4	>=693KHz
CH00-CH01	993.5	>=816KHz

TEST PLOT FOR FREQUENCY SEPARATION

GFSK

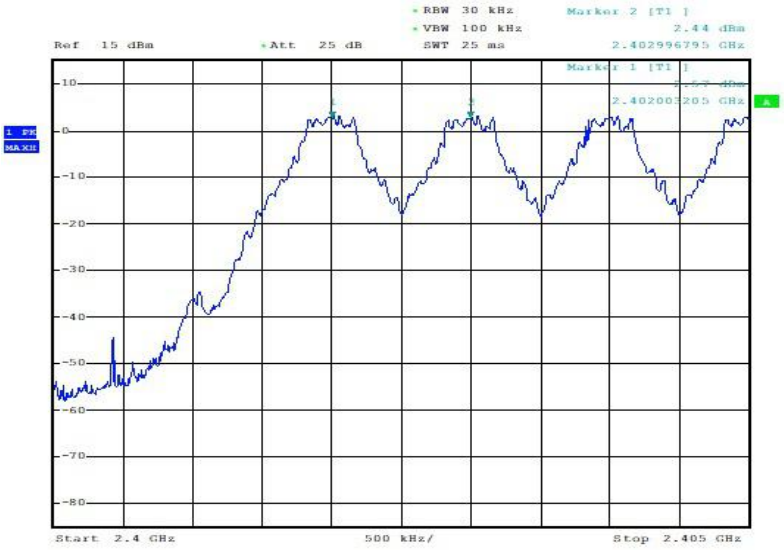

π/4-DQPSK

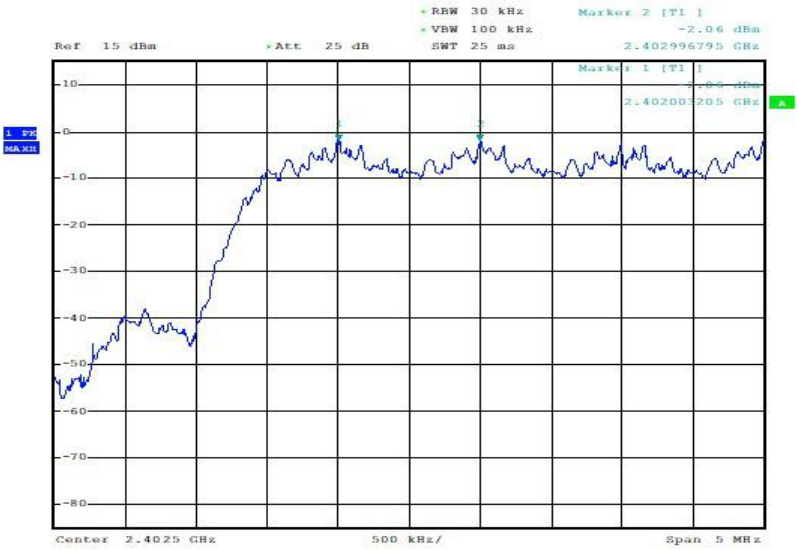

7.5.AVERAGE TIME OF OCCUPANCY (DWELL TIME)

7.5.1.Applicable Standard

According to FCC Part 15.247(a)(1)(iii) and ANSI C63.10-2013

7.5.2.Conformance Limit

The average time of occupancy on any channel shall not be greater than 0.4s within a period of 0.4s multiplied by the number of hopping channels employed.

7.5.3.Measuring Instruments

The Measuring equipment is listed in the section 6.3 of this test report.

7.5.4.Test Setup

Please refer to Section 6.1 of this test report.

7.5.5.Test Procedure

The testing follows ANSI C63.10-2013 clause 7.8.4
The RF output of EUT was connected to the spectrum analyzer by RF cable and attenuator.
The path loss was compensated to the results for each measurement.
Set to the maximum power setting and enable the EUT transmit continuously.
The EUT must have its hopping function enabled.
Use the following spectrum analyzer settings:
Span = zero span, centered on a hopping channel
RBW ≥ 1MHz
VBW ≥ RBW
Sweep = as necessary to capture the entire dwell time per hopping channel
Detector function = peak
Trace = max hold
Measure the maximum time duration of one single pulse.
Set the EUT for DH5, DH3 and DH1 packet transmitting.
Measure the maximum time duration of one single pulse.

7.5.6.Test Results

EUT:	Portable Battery Speaker	Model Name ：	RM-028
Temperature:	20 ℃	Relative Humidity:	48%
Test Mode:	Mode2/3/4（π/4-DPSK）	Test By:	Eder

Channel	Time of Pulse for DH5 (ms)	Number of hops in the period specified in the requirements	Sweep Time (ms)	Limit (ms)
Low	2.893	27*4	312.444	400
Middle	2.89	25*4	289.000	400
High	2.878	29*4	333.848	400

Note: The π/4-DPSK modulation is the worst case and recorded in the report.

Note:
A Period Time = (channel number)*0.4
DH1 Time Slot: Reading * (1600/2)*31.6/(channel number)
DH3 Time Slot: Reading * (1600/4)*31.6/(channel number)
DH5 Time Slot: Reading * (1600/6)*31.6/(channel number)

For Example:
1. In normal mode, hopping rate is 1600 hops/s with 6 slots in 79 hopping channels. With channel hopping rate (1600 / 6 / 79) in Occupancy Time Limit (0.4 x 79) (s), Hops Over Occupancy Time comes to (1600 / 6 / 79) x (0.4 x 79) = 106.67 hops.

2. In AFH mode, hopping rate is 800 hops/s with 6 slots in 20 hopping channels. With channel hopping rate (800 / 6 / 20) in Occupancy Time Limit (0.4 x 20) (s), Hops Over Occupancy Time comes to (800 / 6 / 20) x (0.4 x 20) = 53.33 hops.

3. Dwell Time(s) = Hops Over Occupancy Time (hops) x Package Transfer Time

Test Plot

Package Transfer Time Plot CH00-2DH5

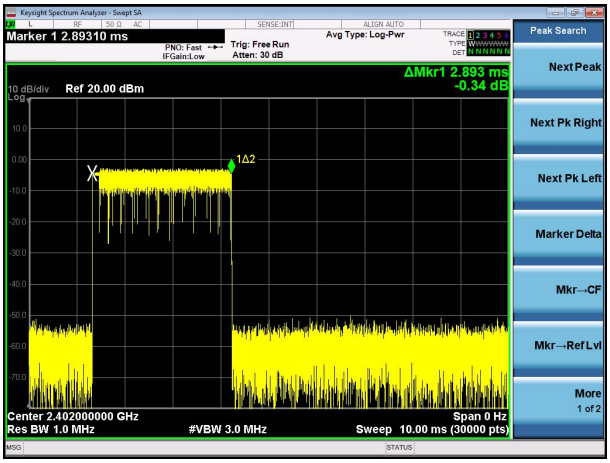

Package Transfer Time Plot CH00-2DH5

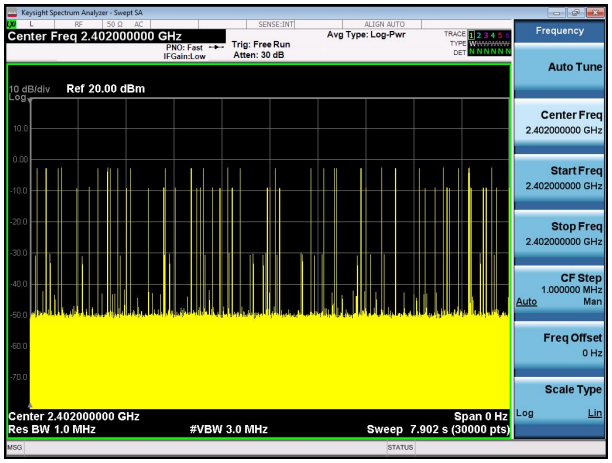

Package Transfer Time Plot CH39-2DH5

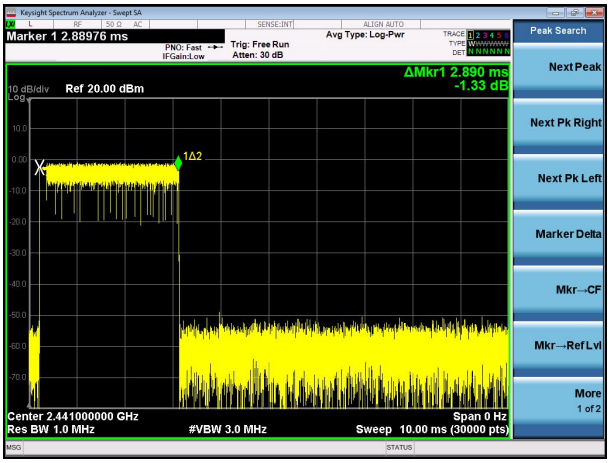

Package Transfer Time Plot CH39-2DH5

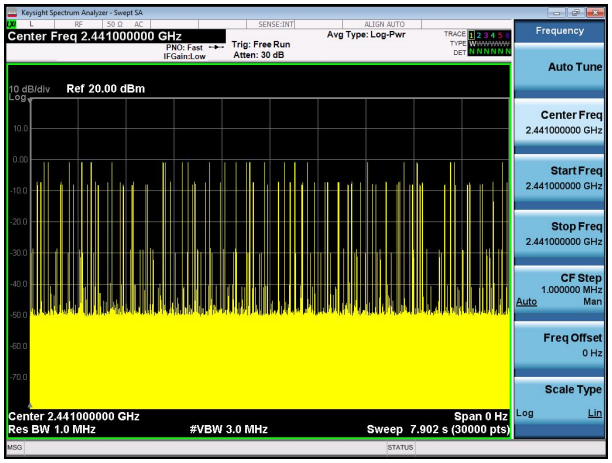

Package Transfer Time Plot CH78-2DH5

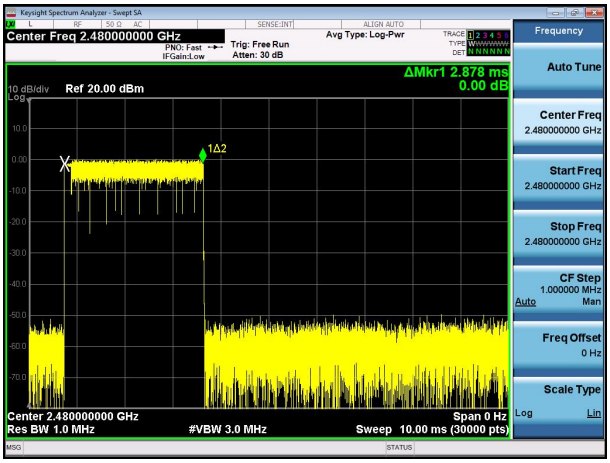

Package Transfer Time Plot CH78-2DH5

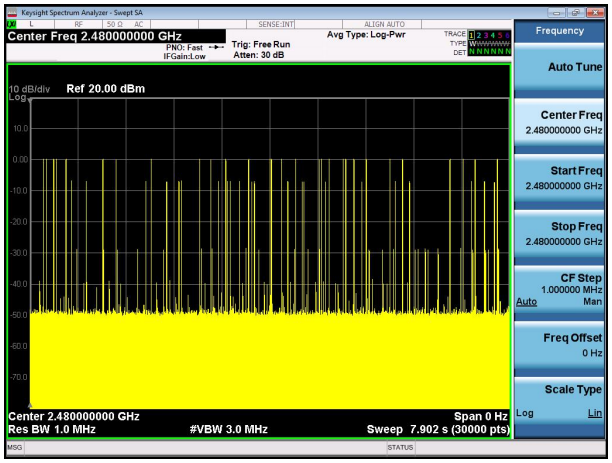

7.6.20DB BANDWIDTH TEST

7.6.1.Applicable Standard

According to FCC Part 15.247(a)(1) and ANSI C63.10-2013

7.6.2.Conformance Limit

No limit requirement.

7.6.3.Measuring Instruments

The Measuring equipment is listed in the section 6.3 of this test report.

7.6.4.Test Setup

Please refer to Section 6.1 of this test report.

7.6.5.Test Procedure

The testing follows ANSI C63.10-2013 clause 6.9.2
The RF output of EUT was connected to the spectrum analyzer by RF cable and attenuator.
The path loss was compensated to the results for each measurement.
Set to the maximum power setting and enable the EUT transmit continuously.
The EUT was operating in controlled its channel.
Use the following spectrum analyzer settings:
Span = approximately 2 to 3 times the 20 dB bandwidth, centered on a hopping channel
RBW ≥ 1% of the 20 dB bandwidth
VBW ≥ RBW
Sweep = auto
Detector function = peak
Trace = max hold

7.6.6.Test Results

EUT:	Portable Battery Speaker	Model Name ：	RM-028
Temperature:	20 ℃	Relative Humidity:	48%
Test Mode:	Mode2/Mode3/Mode4	Test By:	Eder

MEASUREMENT RESULT FOR GFSK MOUDULATION			
Tset Channel	Frequency(MHz)	Measured Bandwidth(KHz)	Verdict
0	2402	1.040	PASS
39	2441	0.9289	PASS
78	2480	0.9259	PASS
MEASUREMENT RESULT FOR Π/4-DQPSK MOUDULATION			
Tset Channel	Frequency(MHz)	Measured Bandwidth(KHz)	Verdict
0	2402	1.224	PASS
39	2441	1.224	PASS
78	2480	1.223	PASS

Test Plot

20dB Bandwidth plot on channel 00 (1Mbps)

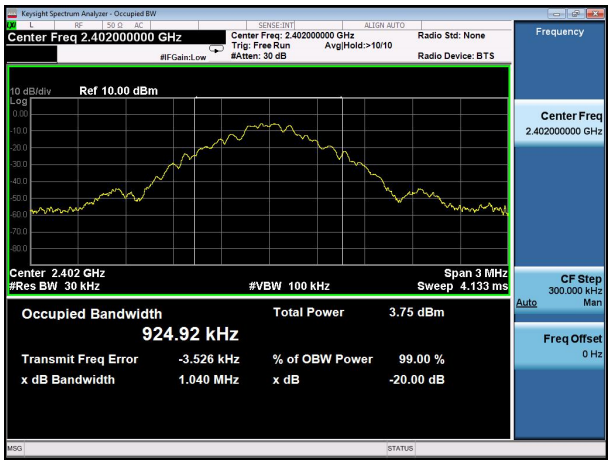

20dB Bandwidth plot on channel 00 (2Mbps)

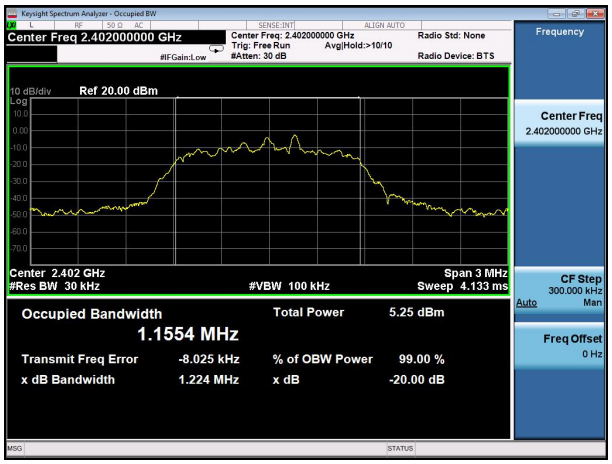

20dB Bandwidth plot on channel 39 (1Mbps)

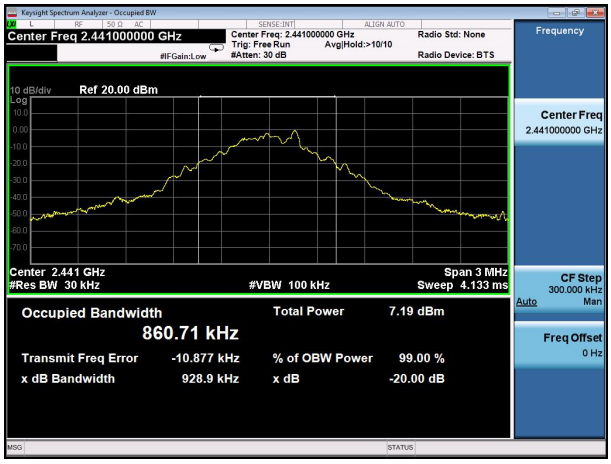

20dB Bandwidth plot on channel 39 (2Mbps)

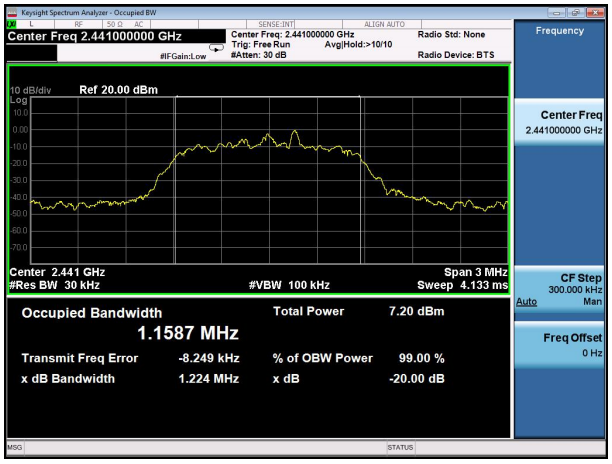

20dB Bandwidth plot on channel 78 (1Mbps)

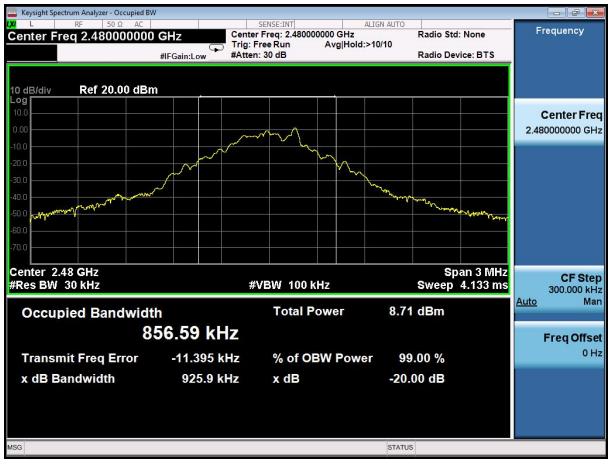

20dB Bandwidth plot on channel 78 (2Mbps)

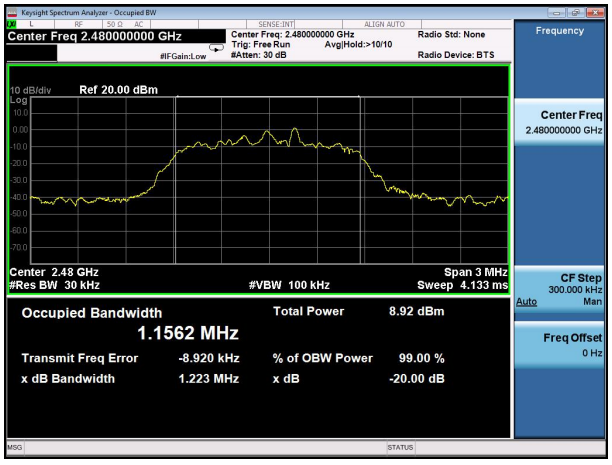

7.7.PEAK OUTPUT POWER

7.7.1.Applicable Standard

According to FCC Part 15.247(b)(1) and ANSI C63.10-2013

7.7.2.Conformance Limit

The maximum peak conducted output power of the intentional radiator shall not exceed the following: (1) For frequency hopping systems operating in the 2400-2483.5 MHz band employing at least 75 non-overlapping hopping channels, and all frequency hopping systems in the 5725-5850 MHz band: 1 watt. For all other frequency hopping systems in the 2400-2483.5 MHz band 0.125 watts.

7.7.3.Measuring Instruments

The Measuring equipment is listed in the section 6.3 of this test report.

7.7.4.Test Setup

Please refer to Section 6.1 of this test report.

7.7.5.Test Procedure

The testing follows ANSI C63.10-2013 clause 7.8.5.
The RF output of EUT was connected to the spectrum analyzer by RF cable and attenuator.
The path loss was compensated to the results for each measurement.
Set to the maximum power setting and enable the EUT transmit continuously.
The EUT was operating in controlled its channel.
Use the following spectrum analyzer settings:
Span = approximately 5 times the 20 dB bandwidth, centered on a hopping channel
RBW ≥ the 20 dB bandwidth of the emission being measured
VBW ≥ RBW
Sweep = auto
Detector function = peak
Trace = max hold

7.7.6.Test Results

EUT:	Portable Battery Speaker	Model Name ：	RM-028
Temperature:	20 ℃	Relative Humidity:	48%
Test Mode:	Mode2/Mode3/Mode4	Test By:	Eder

PEAK OUTPUT POWER MEASUREMENT RESULT FOR GFSK MOUDULATION			
Frequency (GHz)	Peak Power (dBm)	Applicable Limits (dBm)	Pass or Fail
2.402	-0.510	21	Pass
2.441	1.445	21	Pass
2.480	2.917	21	Pass

PEAK OUTPUT POWER MEASUREMENT RESULT FOR Π /4-DQPSK MODULATION			
Frequency (GHz)	Peak Power (dBm)	Applicable Limits (dBm)	Pass or Fail
2.402	0.564	21	Pass
2.441	2.635	21	Pass
2.480	4.095	21	Pass