## Changing Pellets/Purging Hopper

There may be times when you want to change the WEBER SMOKEFIRE ALL NATURAL HARDWOOD PELLET flavor for your next grilling session, or purge the hopper for a thorough cleaning or maintenance.

1. From the rear of your SMOKEFIRE grill, set a large container underneath the middle of the hopper **(A)**.
2. Pull the hopper slide door located on the rear of the hopper to release the pellets into the container below **(B)**.

*WARNING: Before filling your hopper with WEBER SMOKEFIRE ALL NATURAL HARDWOOD PELLETS, visually inspect the hopper finger safety guard to ensure it is in place and not damaged* **(C)**. *If damaged, immediately contact the Customer Service Representative in your area using the contact information on our website for a replacement.*

*CAUTION: Always remember to fill the hopper with WEBER SMOKEFIRE ALL NATURAL HARDWOOD PELLETS before starting your SMOKEFIRE grill.*

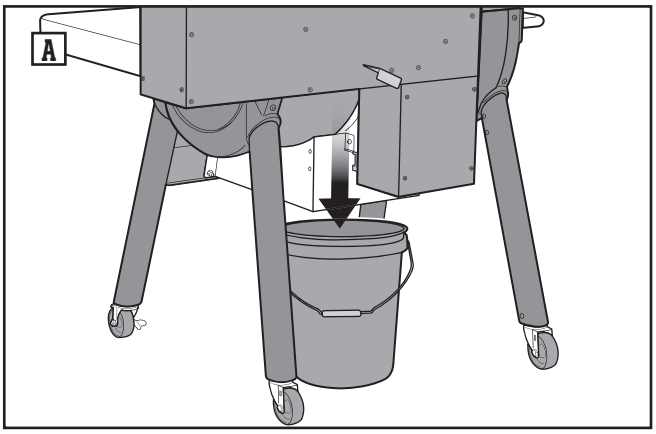


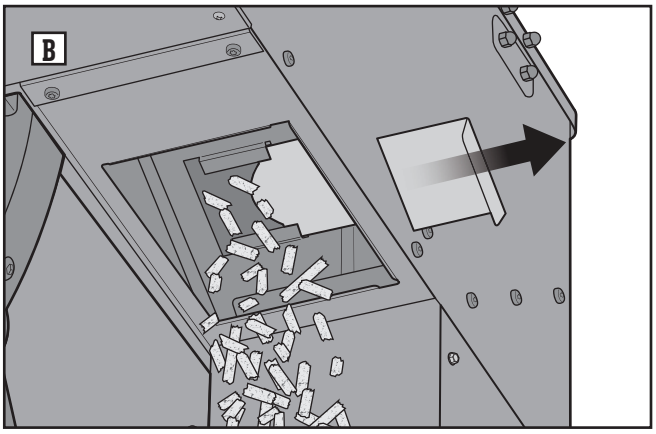


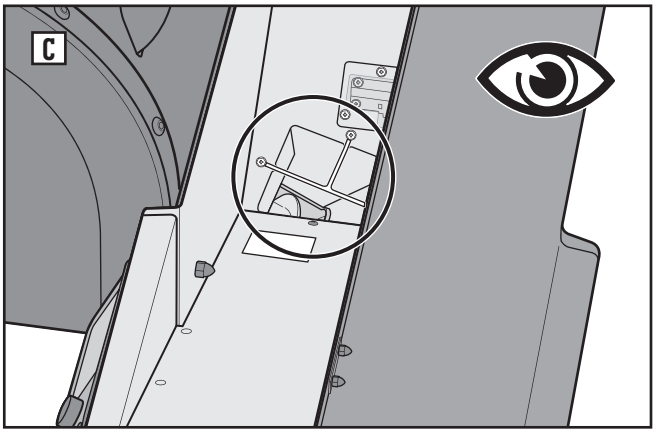


## Grilling Methods

Your WEBER SMOKEFIRE is capable of many different cooking methods such as grilling, searing, smoking, baking, braising, and roasting. Part of the excitement of pellet grilling is that you get to enjoy all of your favorite recipes infused with real hardwood flavor. This element of flavor can elevate your average meal and make it something extraordinary.

*NOTE: When grilling or smoking over a longer period of time, WEBER encourages the use of a water pan inside the cookbox.*

## Explore Your Settings

There are many more features to be explored on the controller and the WEBER CONNECT app. From programmable timers to cook programs, there are more reasons to love your WEBER SMOKEFIRE grill. Explore and experiment with all of the possibilities.

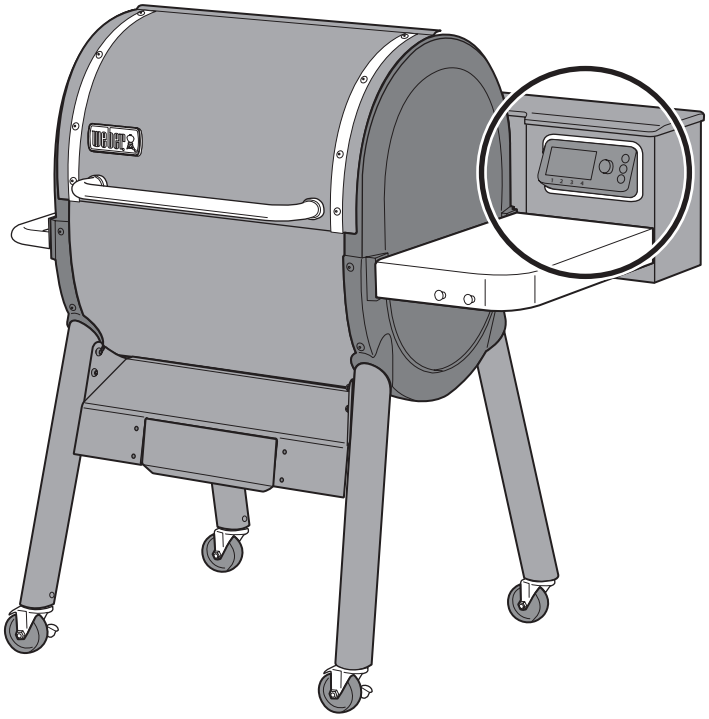

*NOTE: Download the WEBER CONNECT app to get the latest grill software and controller features.*

## Dashboard

The dashboard shows all of the current grill info on the controller display. Here you will find your current and target grill temperature, device connectivity status, and separate tiles that can be setup to display guided cook programs, timers and food temperature probe information.

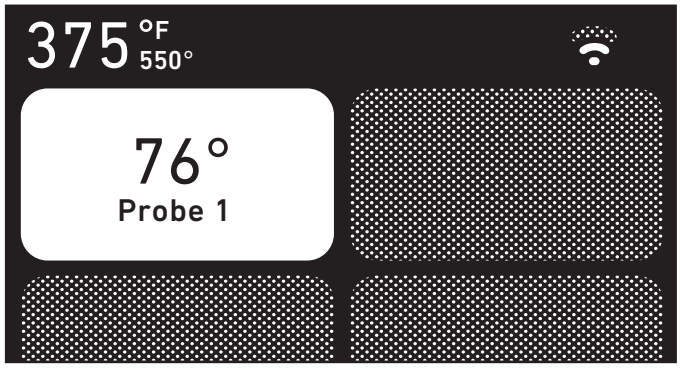


## Main Menu

Push the main menu button to navigate through all of the available settings on the controller. Simply turn the dial and then push it to select your options.

## Setting Up A Probed Cook

Once you plug a food temperature probe into any of the four available ports on the controller, turn and push the dial to select the tile that corresponds with the probe number you want to set options for.

## Probed Cook Settings

Once a food temperature probe is selected from the dashboard, you have the option to select a cook program or simply set a temperature alarm to notify you when your food has reached the desired temperature.

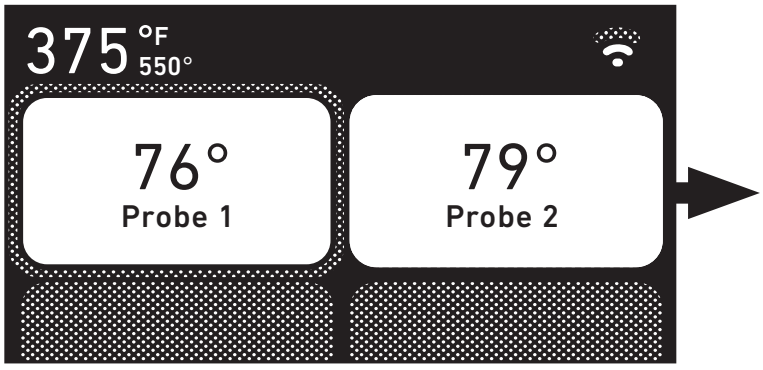


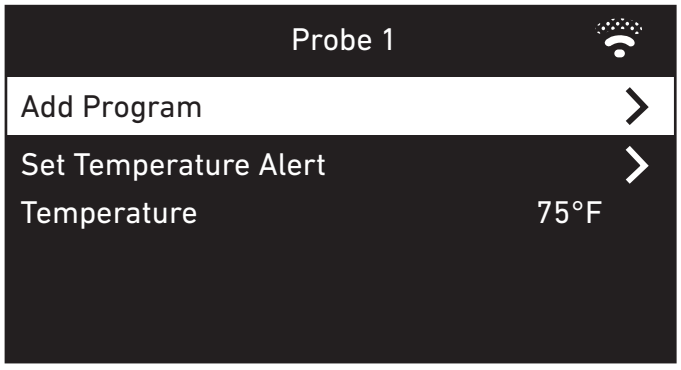

# CONTROLLER SETTINGS

## Cook Programs

If selecting a guided cook program, push the button. Turn and press the dial to select the type of food that you will be cooking. Recently used cook programs will be saved within your controller for quick access to frequently cooked foods.

After selecting your cook program, you can adjust the desired food settings to your personal preference.

*NOTE: Some foods will only allow you to select one temperature doneness choice in order to ensure safe food temperatures when the food has completed cooking.*

Once all of your desired settings have been chosen, turn and press the dial to select the "Start Cooking" option.

*NOTE: When using a guided cook program, you will receive timely tips and notifications throughout your grilling experience to help guide you to perfectly cooked food, every time.*

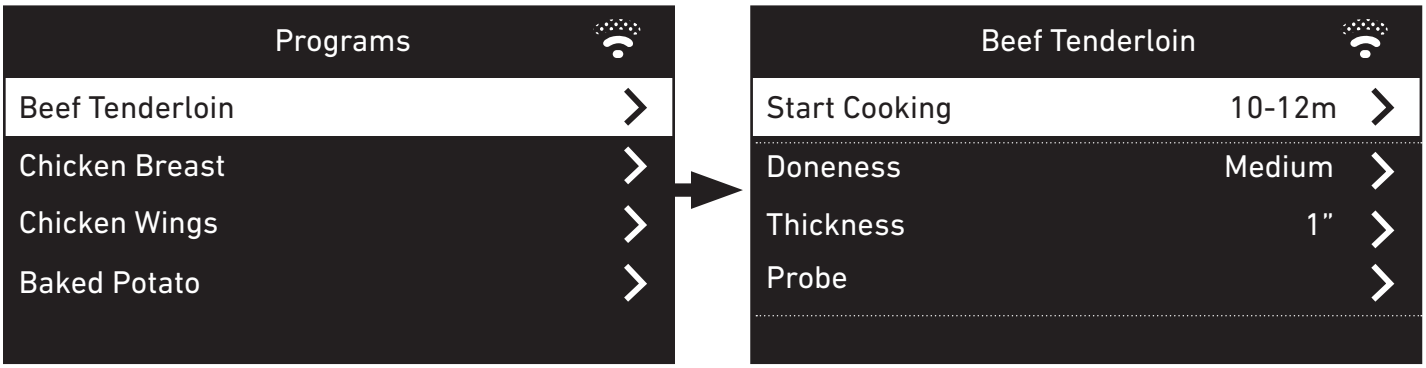


## Timers

Press the button to add a new timer(s). Turn the dial and press it to select the amount of time desired. From the dashboard or through the main menu, you can select your active timer to adjust the amount of time left or stop it.

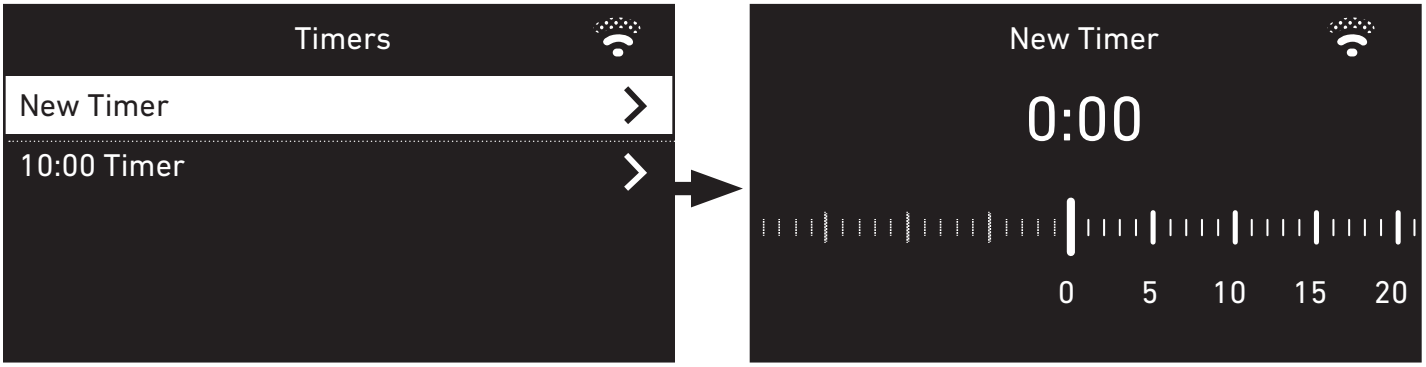


## Regulatory Information

To access regulatory information, press the main menu button. Turn and push the dial to select "Settings", then select "Regulatory Information".

*NOTE: Download the WEBER CONNECT app to get the latest grill software and controller features.*

The controller uses advanced technology capable of troubleshooting your SMOKEFIRE grill. If a problem is detected with your grill, your controller will display and send an error code to notify you of the error before automatically beginning the necessary procedure. Refer to this troubleshooting section and follow the "*SOLUTION*"column associated with the error code displayed, along with the following instructions to remedy and clear errors.

| Error Code | Cause | Solution |
|---|---|---|
| E1 | Auger Jam | Auger jam has been detected. The grill will attempt to clear the auger jam. |
| | Auger Jam Cleared<br>or<br>Auger Jam Cannot Be Cleared | 1. The grill will automatically run the shutdown procedure if the grill is still hot. Open the grill lid and wait until the grill has completed the shutdown procedure and completely cooled.<br>*CAUTION: Do not unplug the grill or power it off during the shutdown procedure.*<br>2. Once the shutdown procedure is complete, power off the grill and unplug from power source.<br>3. Remove the cooking grates, FLAVORIZER bars, heat diffuser, and heat baffle from the cookbox.<br>4. Clean the cookbox and burn pot of any ash or debris using a grill brush or scraper to direct it into the ash and grease system.<br>*CAUTION: Allow time for the ash and debris to fully extinguish before cleaning the grill.*<br>5. Reinstall the heat baffle, heat diffuser, FLAVORIZER bars and cooking grates inside the cookbox.<br>6. Remove and clean any ash or grease from inside the ash and grease system. Once cleaned, reinstall the drawer. Replace grease drip pans as needed.<br>7. Plug the grill into the power source and power on the grill to begin your cook.<br>If the grill is unable to clear the auger jam, please refer to the following instructions on how to manually clear the auger. |
| E2 | Fan Error | The grill will automatically run the shutdown procedure if the grill is still hot. Open the grill lid and wait until the grill has completed the shutdown procedure and completely cooled.<br>*CAUTION: Do not unplug the grill or power it off during the shutdown procedure.*<br>See the following instructions on how to check the fan's electrical connection. If the fan is not operating after securing fan connection, contact the Customer Service Representative in your area using the contact information on our website for fan replacement. |
| E3 | Grill Flame is Out | 1. The grill will automatically run the shutdown procedure if the grill is still hot. Open the grill lid and wait until the grill has completed the shutdown procedure and completely cooled.<br>*CAUTION: Do not unplug the grill or power it off during the shutdown procedure.*<br>2. Once the shutdown procedure is complete, power off the grill and unplug from power source.<br>3. Open the grill lid and remove the cooking grates, FLAVORIZER bars, heat diffuser, and heat baffle from the cookbox.<br>4. Clean the cookbox and burn pot of any ash or debris using a grill brush or scraper to direct it into the ash and grease system.<br>*CAUTION: Allow time for the ash and debris to fully extinguish before cleaning the grill.*<br>5. Reinstall the heat baffle, heat diffuser, FLAVORIZER bars and cooking grates inside the cookbox.<br>6. Remove and clean any ash or grease from inside the ash and grease system. Once cleaned, reinstall the drawer. Replace grease drip pans as needed.<br>7. Plug the grill into the power source and power on the grill to begin your cook. |

| Error Code | Cause | Solution |
|---|---|---|
| E4 | Communication Failure | 1. The grill will automatically run the shutdown procedure if the grill is still hot. Open the grill lid and wait until the grill has completed the shutdown procedure and completely cooled.<br>*CAUTION: Do not unplug the grill or power it off during the shutdown procedure.*<br>2. Once the shutdown procedure is complete, power off the grill and unplug from power source.<br>3. Wait one minute, then plug the grill back into the power source and power on the grill to begin your cook. |
| E5 | Grill is too Hot | 1. The grill will automatically run the shutdown procedure if the grill is still hot. Open the grill lid and wait until the grill has completed the shutdown procedure and completely cooled.<br>*CAUTION: Do not unplug the grill or power it off during the shutdown procedure.*<br>2. Once the shutdown procedure is complete, power off the grill and unplug from power source.<br>3. Open the grill lid and remove the cooking grates, FLAVORIZER bars, heat diffuser, and heat baffle from the cookbox.<br>4. Clean the cookbox and burn pot of any ash or debris using a grill brush or scraper to direct it into the ash and grease system.<br>*CAUTION: Allow time for the ash and debris to fully extinguish before cleaning the grill.*<br>5. Reinstall the heat baffle, heat diffuser, FLAVORIZER bars and cooking grates inside the cookbox.<br>6. Remove and clean any ash or grease from inside the ash and grease system. Once cleaned, reinstall the drawer. Replace grease drip pans as needed.<br>7. Plug the grill into the power source and power on the grill to begin your cook. |
| E6 | Start Up Failure | 1. The grill will automatically run the shutdown procedure if the grill is still hot. Open the grill lid and wait until the grill has completed the shutdown procedure and completely cooled.<br>*CAUTION: Do not unplug the grill or power it off during the shutdown procedure.*<br>2. Once the shutdown procedure is complete, power off the grill and unplug from power source.<br>3. Open the grill lid and remove the cooking grates, FLAVORIZER bars, heat diffuser, and heat baffle from the cookbox.<br>4. Clean the cookbox and burn pot of any ash or debris using a grill brush or scraper to direct it into the ash and grease system.<br>*CAUTION: Allow time for the ash and debris to fully extinguish before cleaning the grill.*<br>5. Remove and clean any ash or grease from inside the ash and grease system. Once cleaned, reinstall the drawer. Replace grease drip pans as needed.<br>6. Plug the grill into the power source and power on the grill.<br>7. Turn and push the dial on the controller to select 400°F as your grill temperature.<br>8. As the grill starts to preheat, visually inspect the glow plug at the bottom of the cookbox.<br>*WARNING: Do not touch the glow plug to check if it is hot*. If the glow plug is operating correctly, it will start to glow in color as it heats.<br>**If the glow plug is operating correctly:**<br>9. Reinstall the heat baffle, heat diffuser, FLAVORIZER bars and cooking grates inside the cookbox.<br>**If the glow plug is not operating correctly:**<br>• The grill will remain cool and will not ignite. Shutdown the grill by pressing and holding the dial on the controller. Contact the Customer Service Representative in your area using the contact information on our website for glow plug replacement. |

| Error Code | Cause | Solution |
|---|---|---|
| E7 | Motor Failure | The grill will automatically run the shutdown procedure if the grill is still hot. Open the grill lid and wait until the grill has completed the shutdown procedure and completely cooled.<br>*CAUTION: Do not unplug the grill or power it off during the shutdown procedure.*<br>See the following instructions on how to check the motor's electrical connection. If the motor is not operating after securing the motor connection, contact the Customer Service Representative in your area using the contact information on our website for motor replacement. |
| E8 | Thermocouple Error | The grill will automatically run the shutdown procedure if the grill is still hot. Open the grill lid and wait until the grill has completed the shutdown procedure and completely cooled.<br>*CAUTION: Do not unplug the grill or power it off during the shutdown procedure.*<br>Contact the Customer Service Representative in your area using the contact information on our website to replace the thermocouple. |
| E9 | Low Fuel Detection Error | The grill will automatically run the shutdown procedure if the grill is still hot. Open the grill lid and wait until the grill has completed the shutdown procedure and completely cooled.<br>*CAUTION: Do not unplug the grill or power it off during the shutdown procedure.*<br>See the following instructions on how to clean the low fuel sensor window. If the low fuel sensor is not operating properly after cleaning, contact the Customer Service Representative in your area using the contact information on our website for low fuel sensor replacement. |

## CALL CUSTOMER SERVICE

If you are still experiencing any problems, contact the Customer Service Representative in your area using the contact information on weber.com.

## REPLACEMENT PARTS

To obtain replacement parts, contact the local retailer in your area or log onto weber.com.

## E1 Auger Jam

### Clearing an Auger Jam

To clear the E1 error code from the controller, please follow these steps:

1. When the grill has completed the shutdown procedure and completely cooled, power off the grill and unplug from power source.
2. Remove the cooking grates, FLAVORIZER bars, heat diffuser, and heat baffle from the cookbox. **(A)**.
3. Using a Phillips screwdriver, remove the pellet slide from the fire pot, and shut the grill lid **(B)**.
4. From the rear of your SMOKEFIRE grill, place a large bucket or container underneath the middle of the hopper **(C)**.
5. Pull the hopper slide door located on the rear of the hopper to release the pellets into the container below **(D)**.
6. From the rear of your SMOKEFIRE grill, remove the rear access panel by removing four screws **(E)**.
7. Disconnect wire connection from the motor by pinching the clip and pulling the quick disconnect plug. **(F)**.

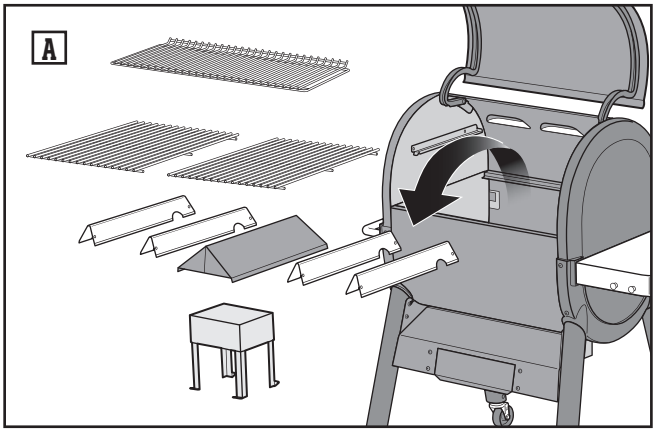


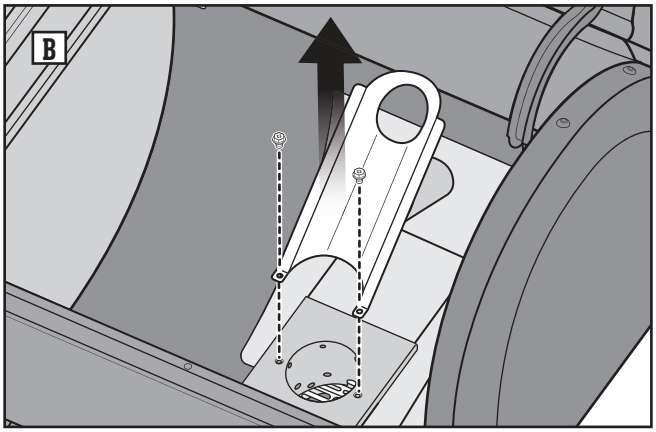


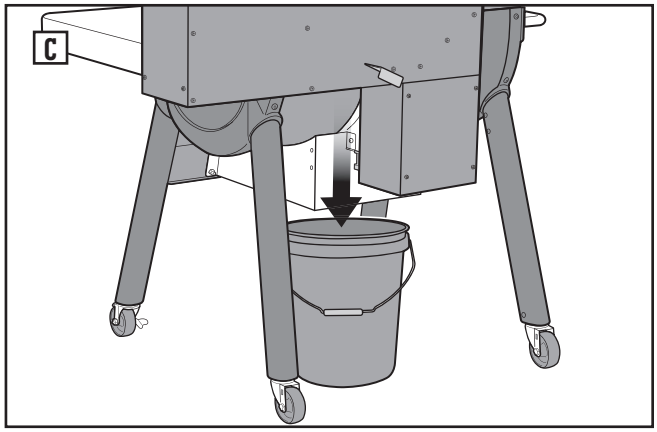


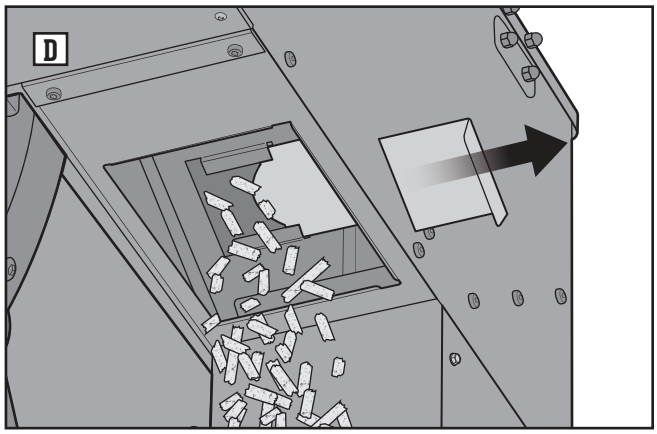


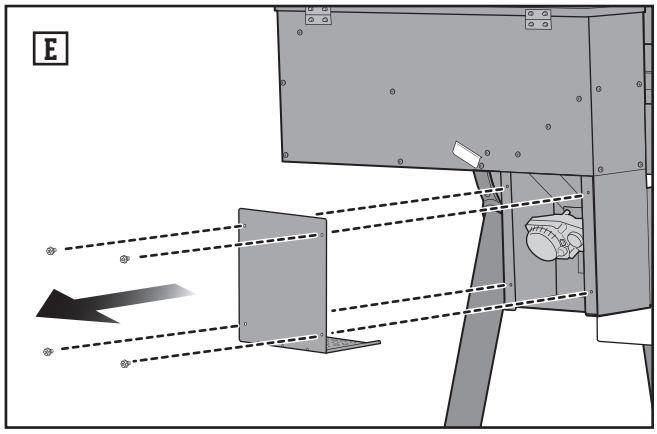


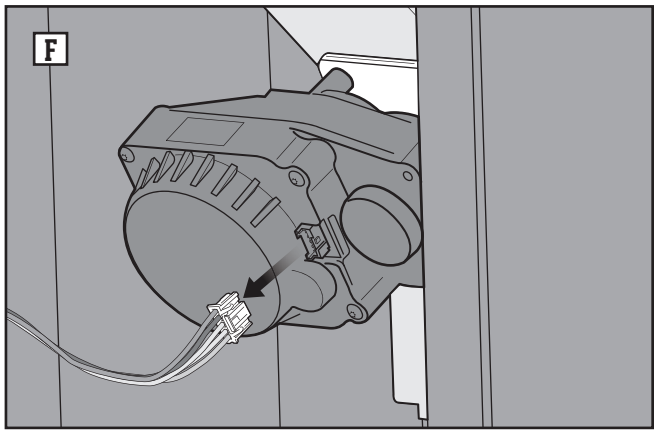

8. Remove the auger/motor assembly by first removing the two screws from the bracket. Carefully slide and twist the auger/motor assembly out and away from the grill **(G), (H).**

*NOTE: Visually note the orientation of the motor when attached to the auger tube.*

9. Remove the auger and motor from the auger tube by first removing the four fastening screws, then pull and twist the auger and motor out from the auger tube **(I)**.
10. Clean the auger tube and auger/motor to remove any pellets and debris that may have been jamming the auger.
11. Before reinstalling the auger and motor back into the auger tube, verify that the shear pin is still intact **(J)**. Both sides of the pin should be fully engaged and visible. The auger should not pull away from the motor. If the shear pin is broken, it should be replaced before reassembling. Contact a WEBER Customer Service Representative in your area using the contact information on our website for a replacement.
12. Reinstall the auger/motor by sliding the auger through the auger tube and fastening it with four screws **(K).**

*CAUTION: Make sure the auger/motor is in the correct orientation when reinstalling into the auger tube. See illustration* **(K)**.

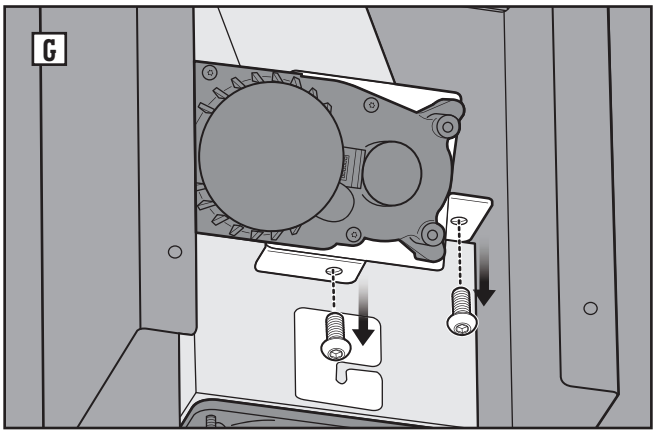


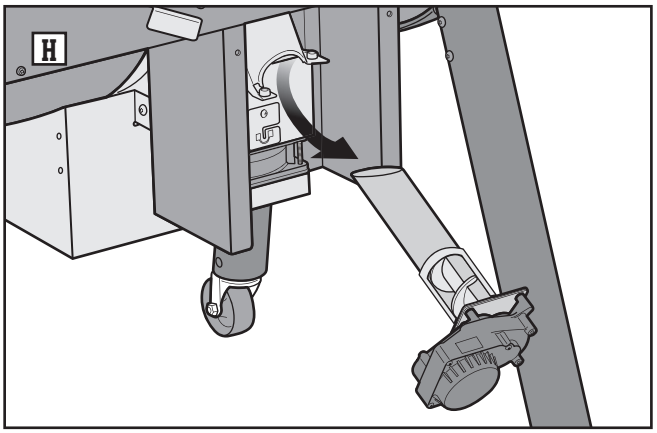


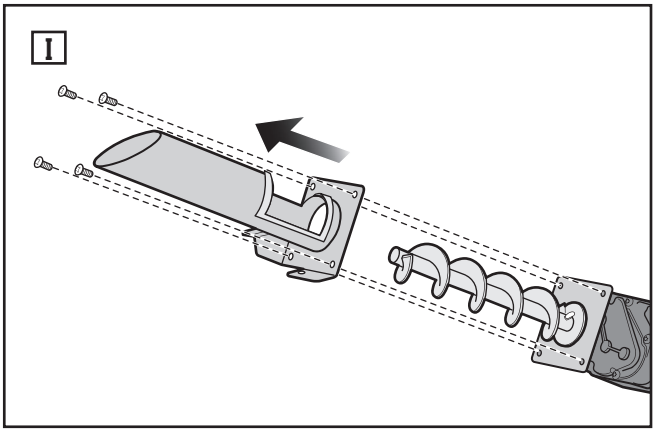


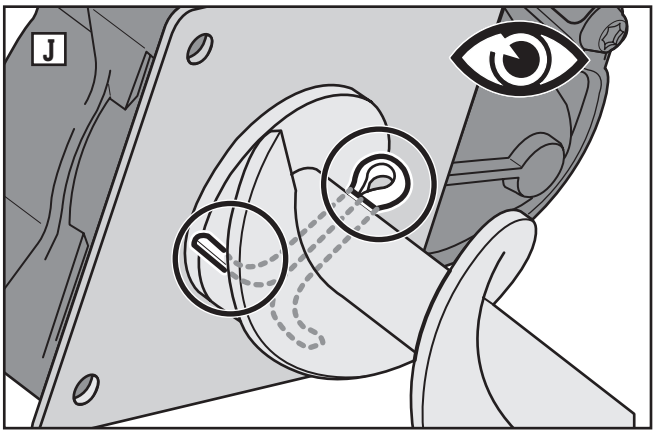


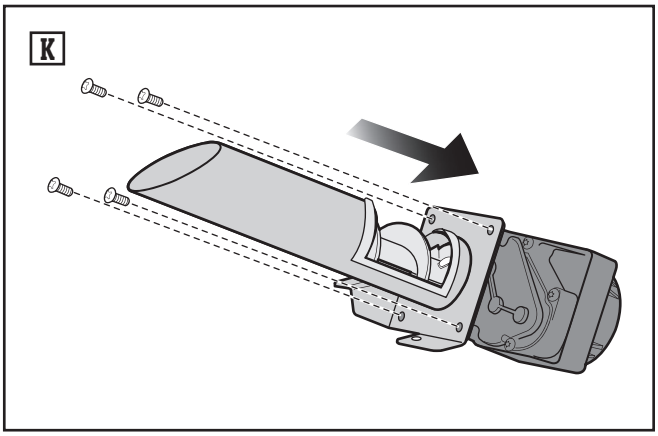

## Continued...

13. Reinstall the auger/motor assembly by slowly and carefully sliding it back into the grill and securing it with two screws **(L), (M).**

*NOTE: Use care to avoid tearing the auger tube gasket when reinstalling the auger/motor assembly. If damaged, replacement gaskets can be ordered by contacting a WEBER Customer Service representative in your area* using the contact information on our website.

14. Connect the motor's electrical connection. Make sure the connector is securely joined to the motor **(N)**.
15. Reinstall the rear access panel **(O)**.

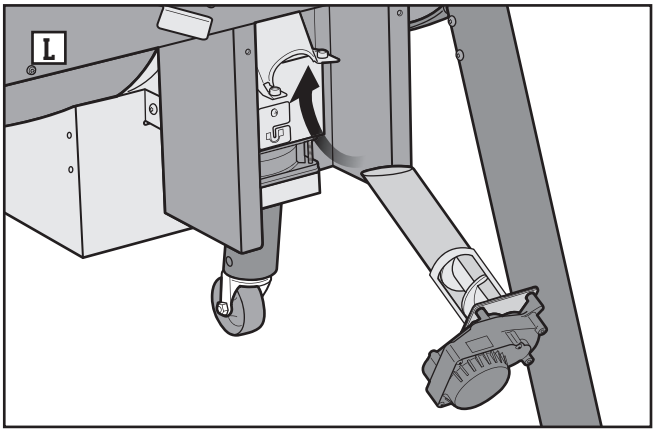


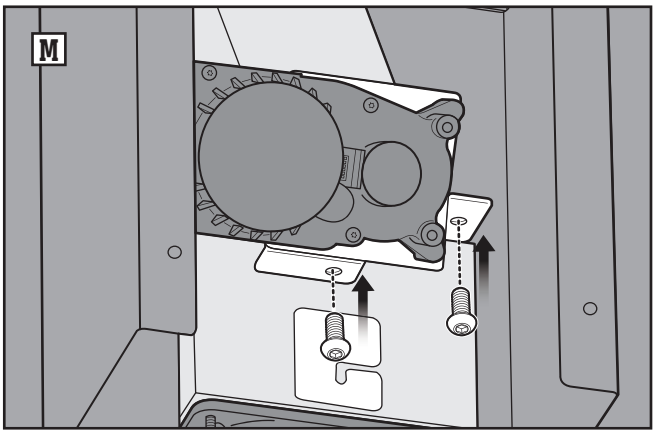


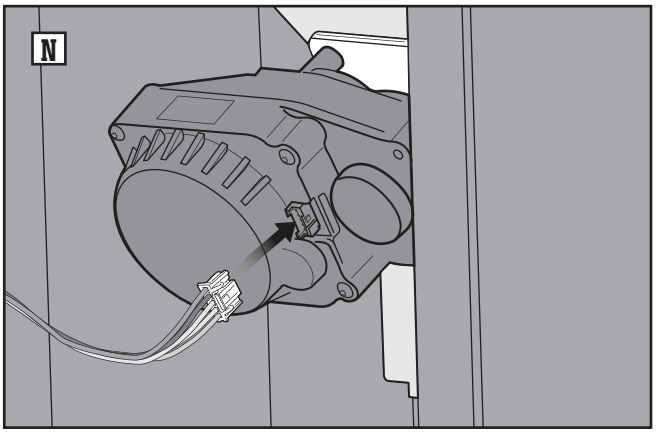


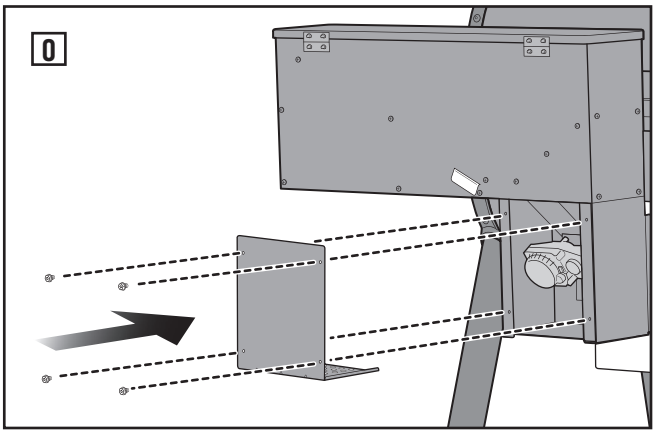

16. Push the hopper slide door closed **(P)**.
17. Open the hopper lid and fill the hopper with your choice of WEBER SMOKEFIRE ALL NATURAL HARDWOOD PELLETS **(Q)**.
18. Open the grill lid and install the pellet slide using a Phillips screwdriver **(R).**

*NOTE: Make sure the auger tube is inserted through the pellet slide opening before securing hardware.*

19. Reinstall the heat baffle, heat diffuser, FLAVORIZER bars and cooking grates inside the cookbox. **(S).**
20. Plug in, power on the grill, and begin a cook to allow the controller to run diagnostics. If the E1 error code still remains on the controller, contact the Customer Service Representative in your area using the contact information on our website.

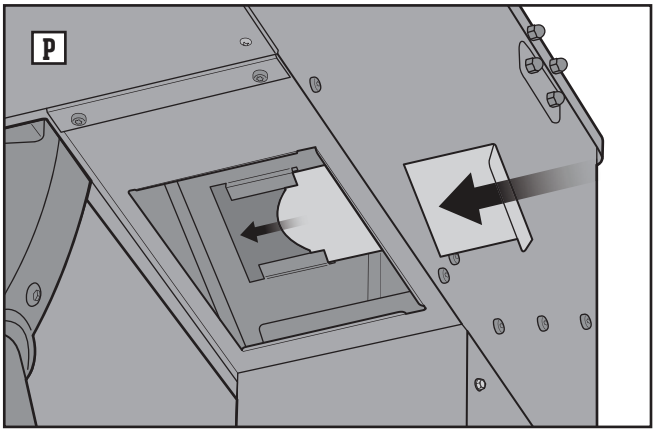


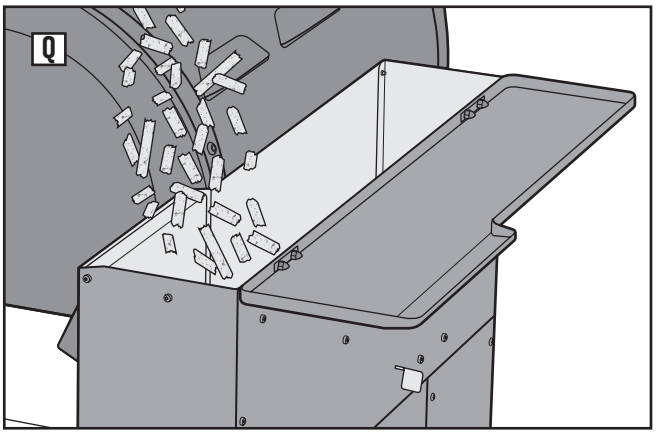


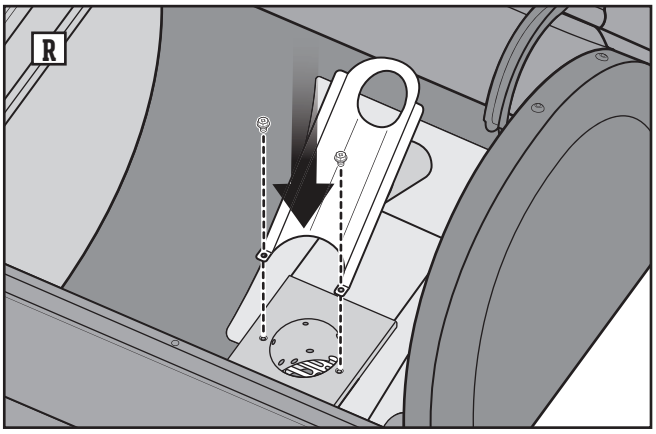


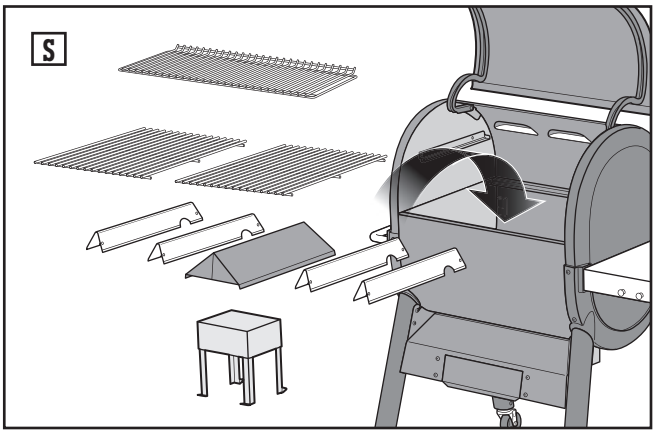

## E2 Fan Error

### Checking Fan Electrical Connection

To clear the E2 error code from the controller, please follow these steps:

1. When the grill has completed the shutdown procedure and completely cooled, power off the grill and unplug from power source **(A)**.
2. From the rear of your SMOKEFIRE grill, remove the rear access panel by removing four screws **(B)**.
3. Check the electrical connection to the fan **(C)**. Make sure the connector is securely joined to the fan's connection point.
4. Reinstall the rear access panel **(D)**.
5. Plug in, power on the grill, and begin a cook to allow the controller to run diagnostics.
6. If the E2 error code still remains on the controller, contact the Customer Service Representative in your area using the contact information on our website for fan replacement.

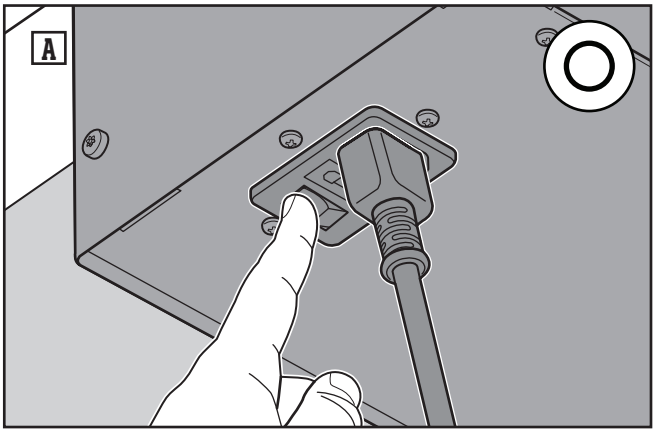


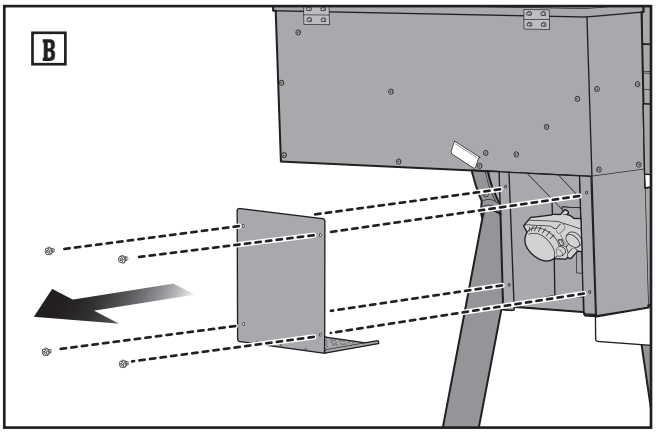


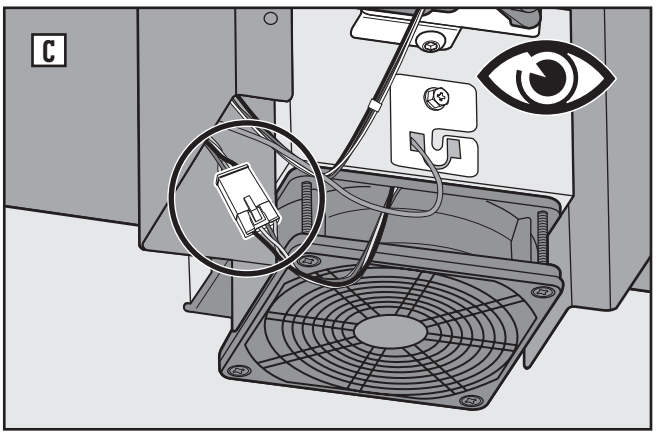


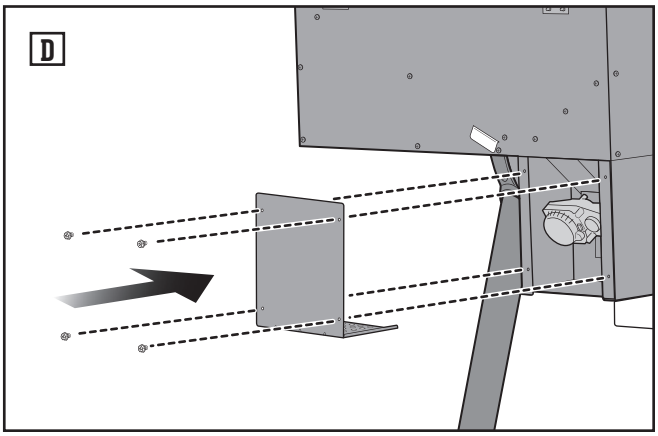

## E7 Motor Failure

### Checking Motor Electrical Connection

To clear the E7 error code from the controller, please follow these steps:
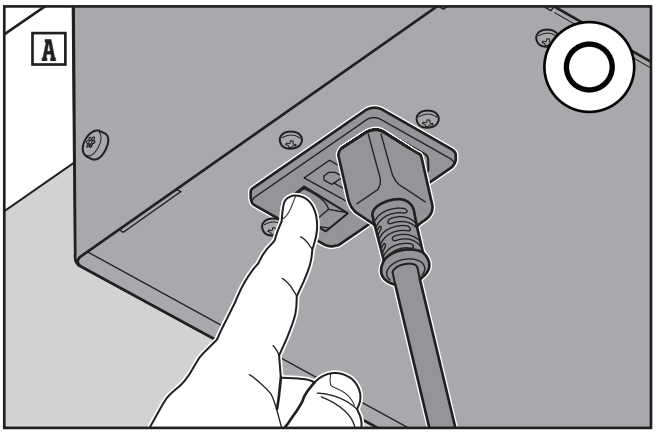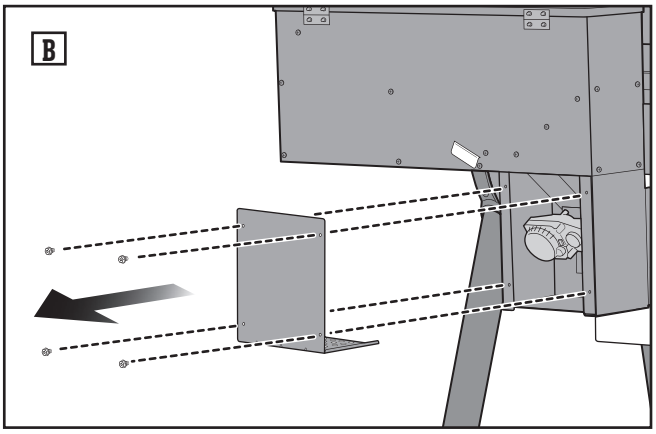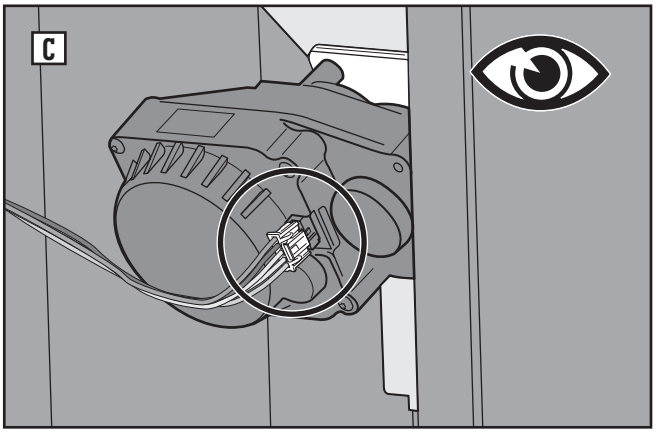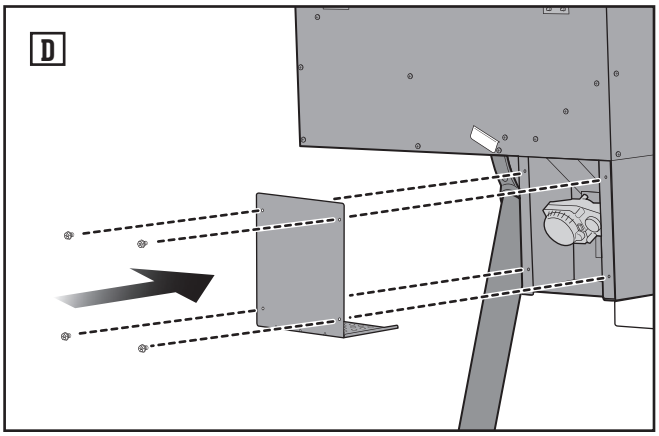
1. When the grill has completed the shutdown procedure and completely cooled, power off the grill and unplug from power source **(A)**.
2. From the rear of your SMOKEFIRE grill, remove the rear access panel by removing four screws **(B)**.
3. Check the electrical connection on the motor **(C)**. Make sure the connector is securely joined to the motor.
4. Reinstall the rear access panel **(D)**.
5. Plug in, power on the grill, and begin a cook to allow the controller to run diagnostics.
6. If the E7 error code still remains on the controller, contact the Customer Service Representative in your area using the contact information on our website for motor replacement.