E9 Low Fuel Detection Error

Cleaning Fuel Sensor Window

To clear the E9 error code from the controller, please follow these steps:

1. When the grill has completed the shutdown procedure and completely cooled, from the rear of your SMOKEFIRE grill, set a large bucket or container underneath the middle of the hopper **(A)**.
2. Pull the hopper slide door located on the rear of the hopper to release the pellets into the container below **(B)**.
3. Using a dry cloth or paper towel, wipe the low fuel sensor window until cleaned **(C)**.
4. Push the hopper slide door closed **(D)**, and refill the hopper with your choice of WEBER SMOKEFIRE ALL NATURAL HARDWOOD PELLETS.
5. Power on the grill and begin a cook to allow the controller to run diagnostics.
6. If the E9 error code still remains on the controller, Contact the Customer Service Representative in your area using the contact information on our website for low fuel sensor replacement.

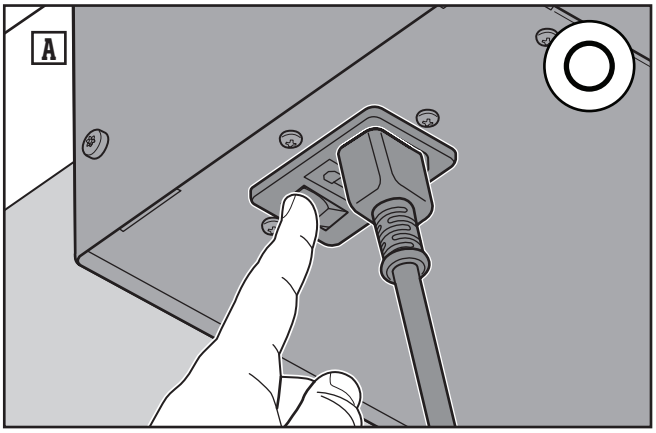

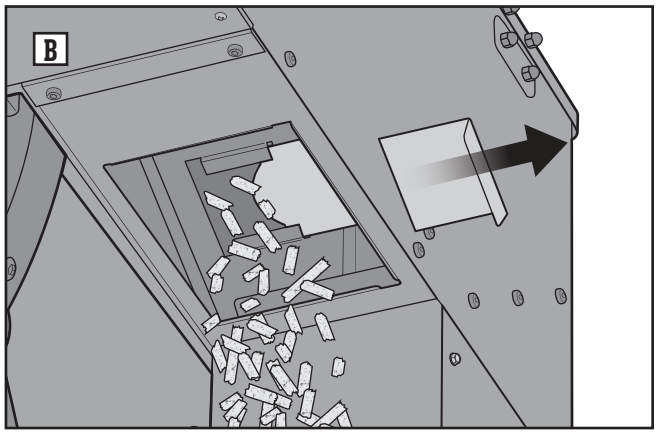

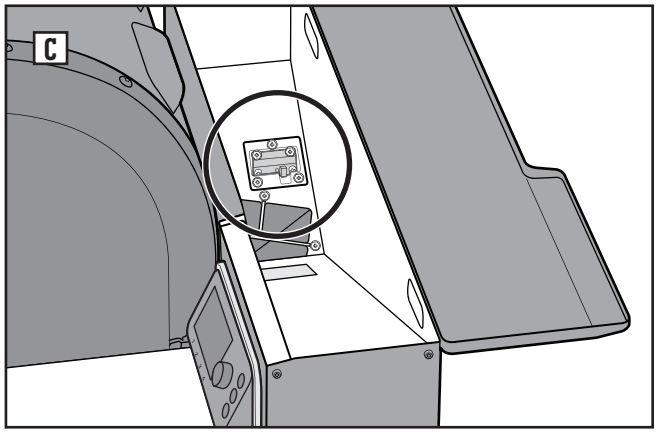

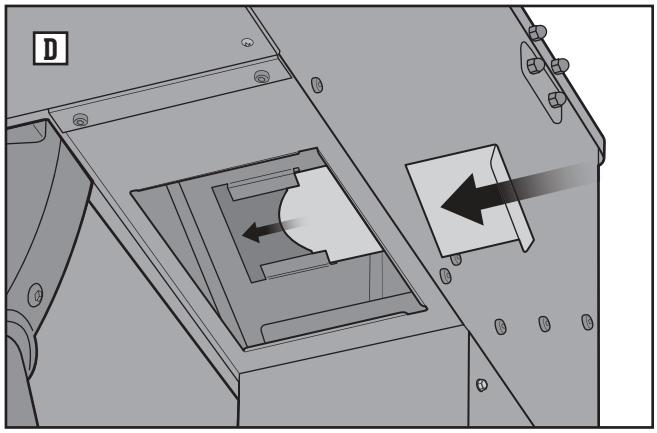

NOTE: Download the WEBER CONNECT app to get the latest grill software and controller features.

The controller will display and send notifications to inform you of certain grill operations and preventative maintenance cautions. Refer to this troubleshooting section and follow the "Sequence / Actions" column associated with the notification displayed along with the following instructions.

Notification	Sequence / Actions
Low Fuel	Refill the hopper with WEBER SMOKEFIRE ALL NATURAL HARDWOOD PELLETS.
Cook Complete	Your cook has ended. You now have the option to continue to cook at the same grill temperature, change the grill temperature, or shutdown the grill.
Improper Shutdown	The grill was improperly shutdown. 1. The grill will automatically run the shutdown procedure if the grill is still hot. Open the grill lid and wait until the grill has completed the shutdown procedure and completely cooled. *CAUTION: Do not unplug the grill or power it off during the shutdown procedure.* 2. Once the shutdown procedure is complete, power off the grill and unplug from power source. 3. Remove the cooking grates, FLAVORIZER bars, heat diffuser, and heat baffle from the cookbox. 4. Clean the cookbox and burn pot of any ash or debris using a grill brush or scraper to direct it into the ash and grease system. *CAUTION: Allow time for the ash and debris to fully extinguish before cleaning the grill.* 5. Remove and clean any ash or grease from inside the ash and grease system. Once cleaned, reinstall the drawer. Replace grease drip pans as needed. 6. Reinstall the heat baffle, heat diffuser, FLAVORIZER bars and cooking grates inside the cookbox. 7. Plug in, power on the grill, and begin a cook to allow the controller to run diagnostics.
Replace Glow Plug	Glow plug is about to reach the end of its life. Do you want to replace it? If YES: 1. Open the grill lid and shutdown the grill by pushing and holding the dial or using the main menu. Wait until the grill has completed the shutdown procedure and completely cooled. *CAUTION: Do not unplug the grill or power it off during the shutdown procedure.* 2. Contact a Customer Service Representative in your area using the contact information on our website to replace the glow plug. 3. See the following instructions on replacing the glow plug. 4. When the glow plug has been replaced, reset the glow plug within the main menu settings of the controller. If NO: You can continue to operate your grill. Glow plug replacement notification will remain on list of outstanding error codes and notifications until it has been replaced and reset.
Shutdown Started	Shutdown Sequence: 1. Burning off excess fuel 2. Preventing burn-back 3. Clearing auger 4. Cleaning burn pot of ash 5. Cooling grill for storage 6. Shutdown Complete

Replacing the Glow Plug

Contact WEBER Customer Service at weber.com for a replacement glow plug. To replace the glow plug, please follow these steps:

1. Open the grill lid and shutdown the grill by pushing and holding the dial or using the main menu. Wait until the grill has completed the shutdown procedure and completely cooled.

CAUTION: Do not unplug the grill or turn it off during the shutdown procedure.

2. Once the grill has completed the shutdown procedure, power off the grill **(A)** and unplug from power source.
3. Open the grill lid and remove the cooking grates, FLAVORIZER bars, heat diffuser, and heat baffle from the cookbox. **(B)**.
4. From the rear of your SMOKEFIRE grill, remove the rear access panel by removing four screws **(C)**.
5. Unplug the glow plug assembly wire by pinching and pulling the quick disconnect plug **(D)**.
6. Carefully remove the glow plug assembly by removing the bracket screw that holds it in place and sliding the assembly out from the grill **(E)**.
7. Remove the glow plug from the glow plug assembly by pulling it out and away **(F)**.
8. Install the replacement glow plug into the glow plug assembly by firmly pushing it into the socket **(G)**.
9. Carefully reinstall the glow plug assembly straight through the back of the grill, and secure it in place by tightening the bracket screw **(H)**.

NOTE: Be sure that the tip of the glow plug has been properly installed by visually inspecting the glow plug at the bottom of the burn pot inside the cookbox. The tip of the glow plug must be inserted through the pellet grate for proper operation **(I)**.

10. Reconnect the glow plug assembly wire connector **(J)**.
11. Reinstall the rear access panel **(K)**.
12. Reinstall the heat baffle, heat diffuser, FLAVORIZER bars and cooking grates inside the cookbox. **(L)**.
13. Plug the power cord into the grill located underneath the hopper, then plug the grill into a power source.
14. Power on the grill and reset the glow plug within the main menu settings of the controller.

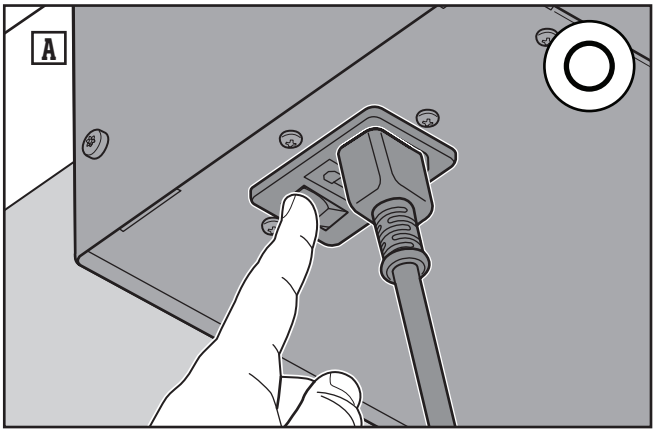

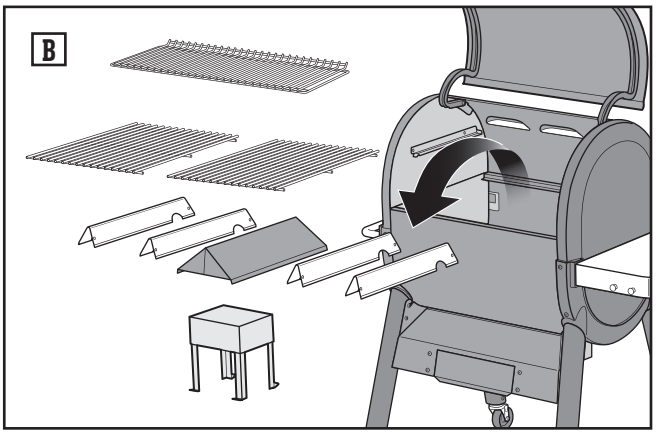

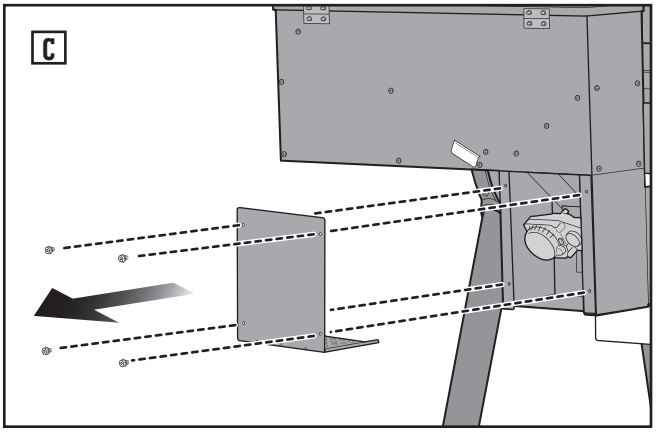

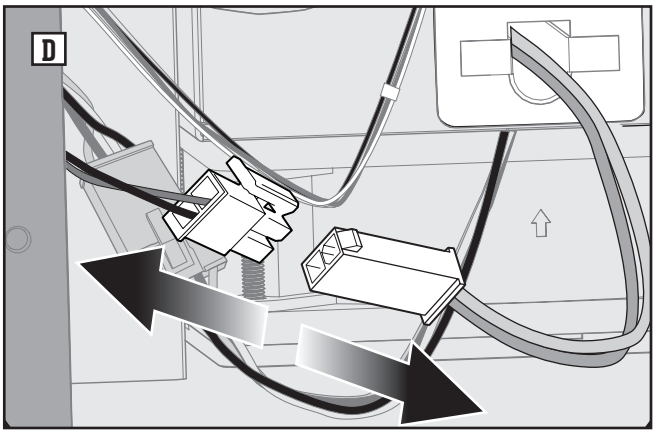

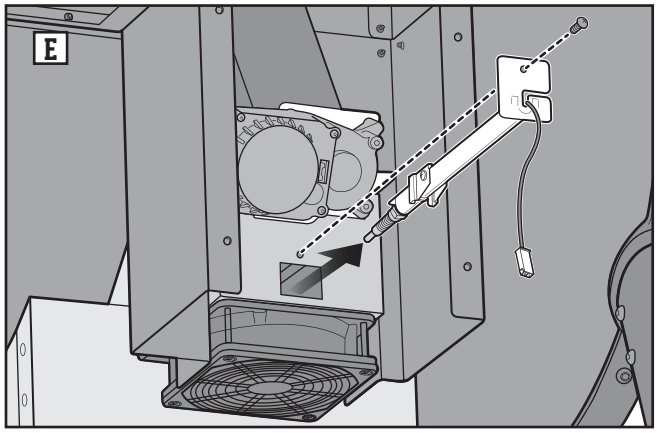
E

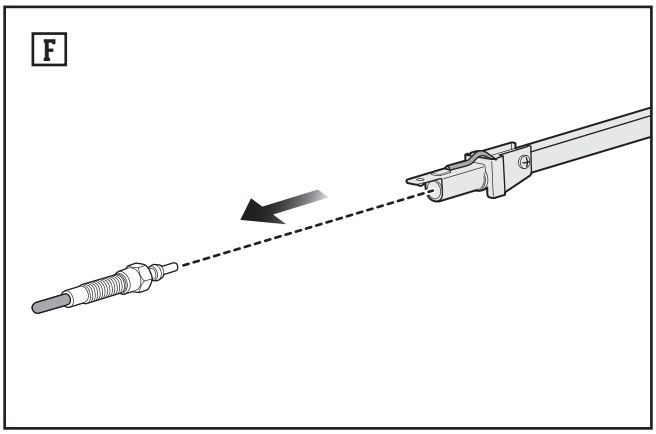
F

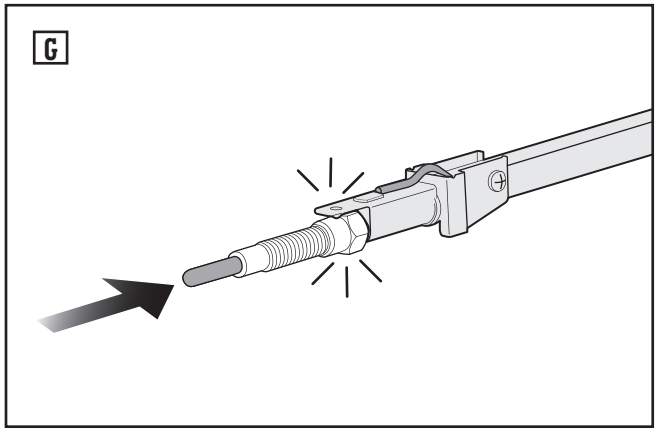
G

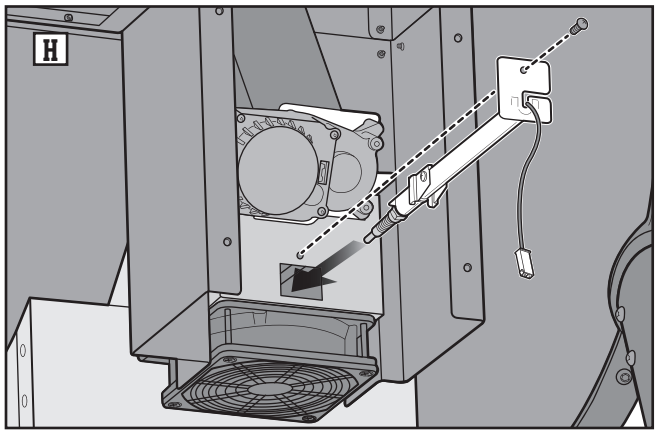
H

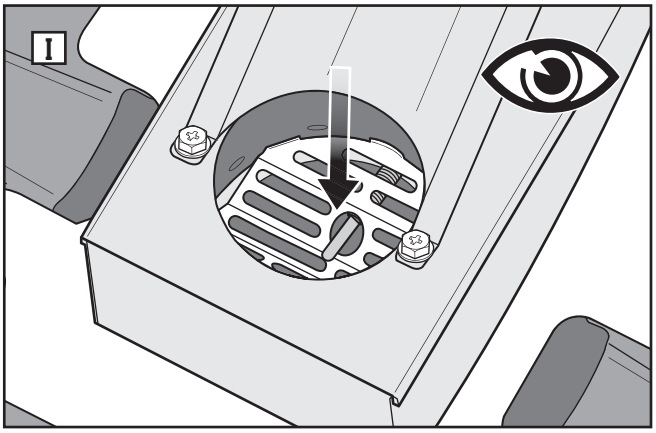
I

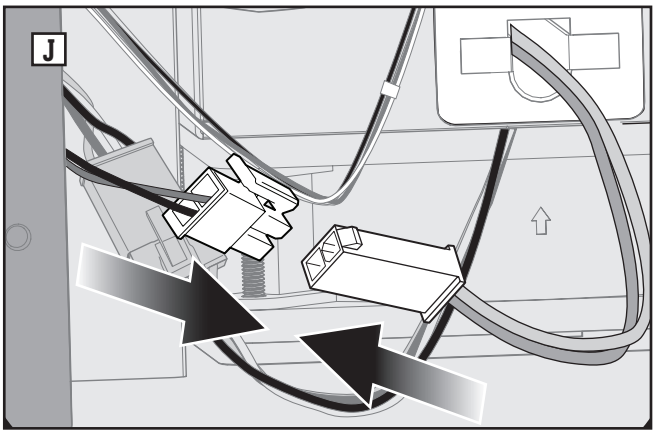
J

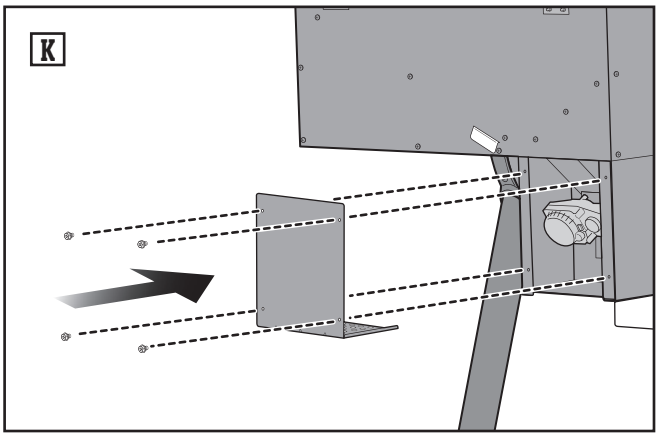
K

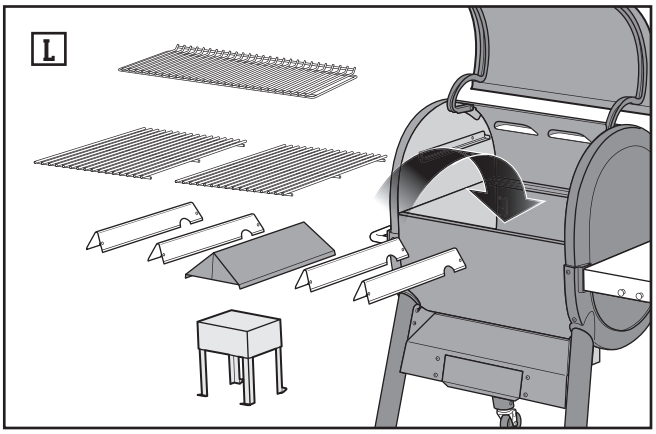
L

TROUBLESHOOTING

Symptom	Cause / Actions
Grill will not power on	If the grill will not power on: **1.** Check that the power cord is securely plugged into the grill and into a power source. **2.** If your grill is using a GFCI outlet, reset the device. **3.** If the grill will still not power on after you have completed the above checks, it is likely that the fuse has blown. See the following instructions on how to replace the grill's fuse. **4.** If the grill will not power on after all steps have been followed, contact the Customer Service Representative in your area using the contact information on our website.
Inside of grill lid appears to have peeling paint	The flakes you see are accumulated cooking vapors that have turned into carbon. This happens over time after repeated use of your grill. This is not a defect. Using a grill brush or the included grill scraper, gentley scrub and clean the carbon flakes off of the lid and cookbox. Wipe clean with a soft cloth or paper towel.

CALL CUSTOMER SERVICE

If you are still experiencing any problems, contact the Customer Service Representative in your area using the contact information on weber.com.

REPLACEMENT PARTS

To obtain replacement parts, contact the local retailer in your area or log onto weber.com.

Fuse Replacement

If your SMOKEFIRE grill is non-responsive even after securing all electrical connections, it is possible that the grill's fuse has blown. The grill's power supply utilizes a 5 Amp, 120 Volt Cartridge Fuse. This simple and inexpensive part can be easily replaced with the following instructions:

CAUTION: Only use the properly sized and rated fuse when replacing. Failure to do so will void your warranty. The correct fuse is:

5x20mm FAST BLOW

1.6A @ 240 VAC

1. Make sure that the grill is completely cool, then power off and unplug the grill from the power source **(A)**.
2. The fuse is installed inside the fuse holder located on the underside of the hopper. Use a flathead screwdriver to gently pry open the fuse holder and remove the fuse **(B)**.
3. Visually inspect the fuse to confirm that it has blown **(C)**.

NOTE: If the fuse has blown, it will look slightly burned or split.

4. Install a new fuse into the fuse holder and reinstall the fuse holder into the power module **(D)**.

CAUTION: Make sure the fuse holder is fully installed and closed before operating your grill.

5. Plug in, power on the grill, and begin a cook to allow the controller to run diagnostics.

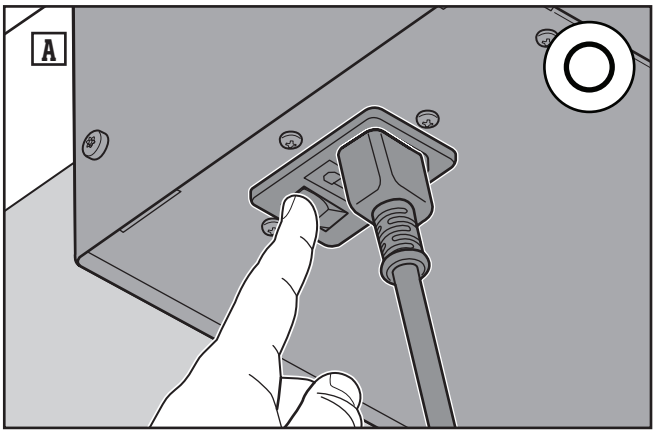

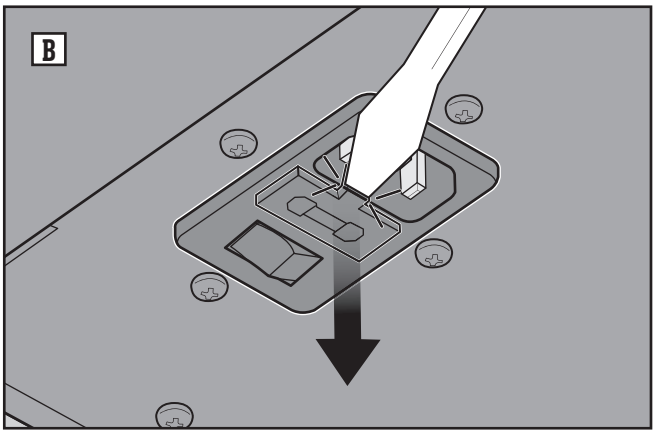

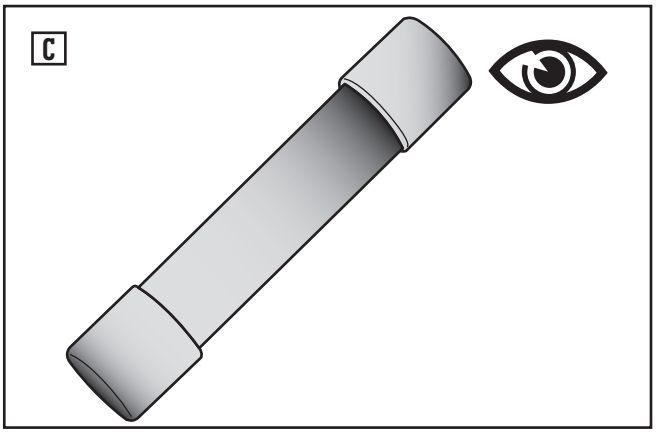

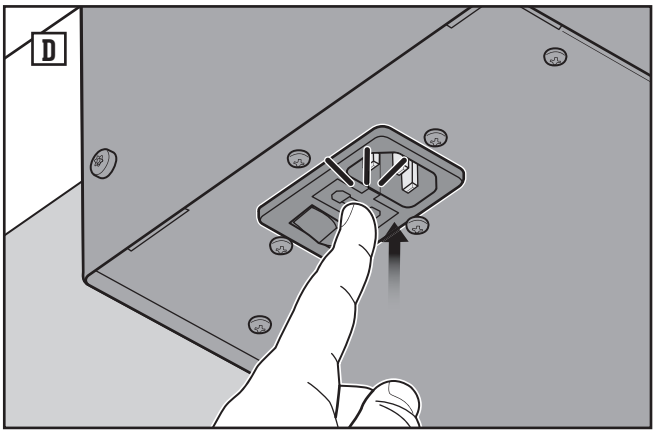

MAINTENANCE

Recommended Cleaning

In order to keep your WEBER SMOKEFIRE grill running smoothly for years of grilling and smoking, WEBER recommends a thorough cleaning of the grill after 20 hours of cooking or after every 12 cooks.

WARNING: ALWAYS MAKE SURE THE GRILL IS COMPLETELY COOLED AND UNPLUGGED FROM A POWER SOURCE BEFORE PERFORMING ANY MAINTENANCE OR CLEANING.

CAUTION: NEVER SPRAY THE GRILL WITH A STEADY WATER STREAM SUCH AS FROM A GARDEN HOSE OR POWER WASHER. ELECTRONIC COMPONENTS COULD BECOME DAMAGED.

CAUTION: WEBER recommends the use of barbecue mitts or rubberized gloves to protect your hands while cleaning your grill.

Please follow these steps for cleaning your grill:

1. Once your grill has completed a proper shut down and completely cooled, power off the grill and unplug from the power source.
2. Open the grill lid and brush or scrape the lid clean with a grill brush or the included scraper.
3. While in place, brush or scrape the cooking grates clean, then remove them from the cookbox and set aside.
4. While the FLAVORIZER bars and heat diffuser are in place, brush or scrape them clean, then remove them from the cookbox and set aside.
5. Hold the heat baffle steady with one hand and brush or scrape clean with a grill brush or scraper with the other hand. Then remove from the cookbox and set aside.
6. Brush or scrape the interior of the cookbox with a grill brush or scraper. Direct all of the grease and debris towards the vents in the bottom of the cookbox, and into the disposable drip pan.
7. Using the included scraper or a soft bristle brush, clean out the burn pot, pushing any remaining ash or debris through the pellet grate at the bottom of the burn pot.
8. Remove the ash and grease system drawer to clean out ash and replace the disposable drip pan. In addition, clean the inside of the ash and grease system housing to prevent a buildup of ash that could stop the drawer from fully closing. Once the drawer and housing have been cleaned, reinstall the drawer.

WARNING: DO NOT REMOVE THE ASH AND GREASE SYSTEM DRAWER WHILE OPERATING THE GRILL, OR IF STILL HOT AFTER SHUTDOWN. Frequently replace the disposable drip pan before igniting the grill to reduce the risk of a grease fire.

9. Reinstall the heat baffle, heat diffuser, FLAVORIZER bars and cooking grates inside the cookbox.

Annual Engine Cleaning

Every 12 months, your SmokeFire grill should have a thorough engine cleaning performed in order to ensure proper grill operation.

WARNING: ALWAYS MAKE SURE THE GRILL IS COMPLETELY COOLED AND UNPLUGGED FROM A POWER SOURCE BEFORE PERFORMING ANY MAINTENANCE OR CLEANING.

CAUTION: NEVER SPRAY THE GRILL WITH A STEADY WATER STREAM SUCH AS FROM A GARDEN HOSE OR POWER WASHER. ELECTRONIC COMPONENTS COULD BECOME DAMAGED.

CAUTION: WEBER recommends the use of barbecue mitts or rubberized gloves to protect your hands while cleaning your grill.

Please follow these steps for cleaning your SmokeFire engine:

1. Once your grill has completed a proper shut down and completely cooled, power off the grill and unplug from the power source.
2. Remove the rear access panel located at the rear of the grill.
3. Unplug the glow plug electrical connection, remove the glow plug assembly, and set it aside.
4. Open the grill lid and remove the cooking grates, FLAVORIZER bars, and heat baffle from the cookbox.
5. Remove the 2 screws that secure the pellet slide to the top of the burn pot, and remove the pellet slide from the cookbox.
6. Remove the burn pot and pellet grate from the cookbox.
7. Using the included scraper or a soft bristle brush, clean the burn pot area by brushing or scraping any ash or debris down the vent into the ash and grease managment system.

NOTE: Be sure to thoroughly clean any built up ash and debris that may have occurred during grill operation.

8. Reinstall the pellet grate, burn pot, and pellet slide. Be sure to reinstall the two screws that secure the pellet slide to the top of the burn pot.
9. Reinstall the glow plug assembly through the rear of the grill.

NOTE: Visually inspect that the tip of the glow plug is installed properly through the pellet grate located at the bottom of the cookbox. If it is not through the pellet grate, you must remove the glow plug assembly again to adjust and reinstall it.

10. Reconnect the glow plug assembly electical connection.
11. Reinstall the rear access panel located at the rear of the grill by securing four screws.
12. Reinstall the heat baffle, FLAVORIZER bars, and cooking grates inside the cookbox.

Cleaning the Exterior of the Grill

The outside of your grill may include stainless steel, porcelain enameled, and plastic surfaces. WEBER recommends the following methods based on the surface type.

Cleaning Stainless Steel Surfaces

Clean stainless steel using a non-toxic, non-abrasive stainless steel cleaner or polish designed for use on outdoor products and grills. Use a soft, lint-free cloth to clean in the direction of the grain of the stainless steel. Do not use paper towels.

CAUTION: Do not risk scratching your stainless steel with abrasive pastes. Pastes do not clean or polish. They will change the color of the metal by removing the top chromium oxide film coating.

Cleaning Painted, Porcelain-Enameled Surfaces and Plastic Components

Clean painted, porcelain-enameled and plastic components with warm soapy water and a soft, lint-free cloth. After wiping down the surfaces, lightly rinse and dry thoroughly.

Cleaning the Outside of Grills that are in Unique Environments

If your grill is subject to a particularly harsh environment, you will want to clean the outside more often. Acid rain, pool chemicals, and salt water can cause surface rusting to appear. Wipe down the outside of your grill with warm soapy water. Follow up with a light rinse and thorough drying. Additionally, you may want to apply a non-abrasive stainless steel cleaner weekly to prevent surface rust. Use only as directed.

Cleaning the Temperature Probes

Your included temperature probes should be cleaned after every use to ensure safe cooking practices. However, the temperature probes should never be submerged in any type of liquid because it could damage them. WEBER recommends gently wiping the temperature probes clean with warm soapy water and a soft cloth or paper towel.

Wear Gloves

Always wear heat-resistant barbecue mitts or gloves when using your WEBER SMOKEFIRE grill. Vents, handles, ash and grease system, and cookbox will all get hot during the grilling process and can cause severe burns. Be sure to keep your hands and forearms protected.

Preheat Your Grill

Preheating your grill with the lid closed prepares the cooking grates and internal cookbox temperature for grilling. The heat loosens any bits and pieces of food hanging onto the cooking grates, making it easy to clean them off with a grill brush or wood scraper. Preheating your grill also gets the cooking grates hot enough to sear properly and also helps prevent food from sticking to them.

CAUTION: When using a stainless steel bristle grill brush, be sure to check for loose bristles. Replace the brush if any loose bristles are found on cooking grate or brush.

Put A Lid On It

It is important to remember to always cook with your grill lid closed. This will keep your internal cookbox temperature where you want it to be and throughly cook your food.

Mix It Up

There are many varieties of WEBER SMOKEFIRE ALL NATURAL HARDWOOD PELLETS like Hickory, Apple, Cherry, and more. You can experiment by mixing different flavors of pellets. Explore the possibilities.

Cook Time and Temperature

If you are grilling in a colder climate or in windy conditions, the cooking times could be longer. These conditions will lower the grill's temperature, so always monitor your grill and use food temperature probes to ensure safe food temperatures. Remember to keep the grill lid closed as much as possible during cooking so the heat and smoke do not escape.

⚠ **WARNING!** Always unplug the grill from a power source and wait for the grill to completely cool before performing any maintenance or cleaning.

⚠ **WARNING!** Never spray the grill with a steady water stream such as from a garden hose or power washer. Electronic components could become damaged.

⚠ **WARNING!** Over time, the development of rough surfaces can form on the heat baffle, FLAVORIZER bars, heat diffuser, and cooking grates. Wearing protective gloves is recommended when handling these parts.

⚠ **WARNING!** Do not clean the heat baffle, FLAVORIZER bars, heat diffuser, or cooking grates in a sink, dishwasher, or self-cleaning oven.

⚠ **WARNING!** Do not place any grill parts onto the side table as they may scratch the stainless steel.

⚠ **WARNING!** Do not use any of the following to clean your grill:

- Abrasive stainless steel polishes or pastes
- Cleaners that contain acid, mineral spirits or xylene
- Oven cleaner
- Abrasive cleansers or pads

REPLACEMENT PARTS

Use only genuine WEBER replacement parts for any repair or replacement. Visit weber.com

SmokeFire - EX4 - US 112519

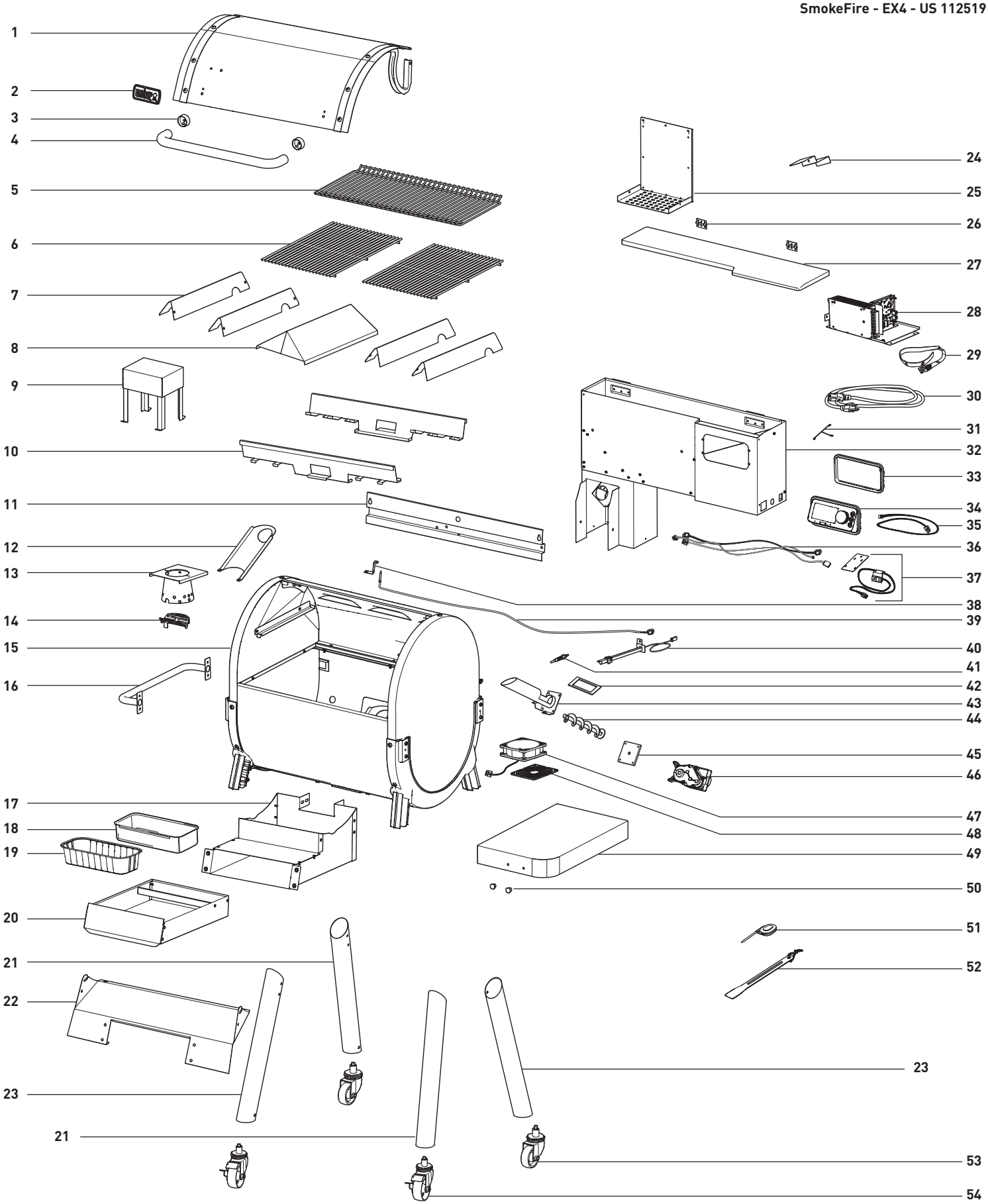

Use only genuine WEBER replacement parts for any repair or replacement. Visit weber.com

REPLACEMENT PARTS

SmokeFire - EX6 - US 120119

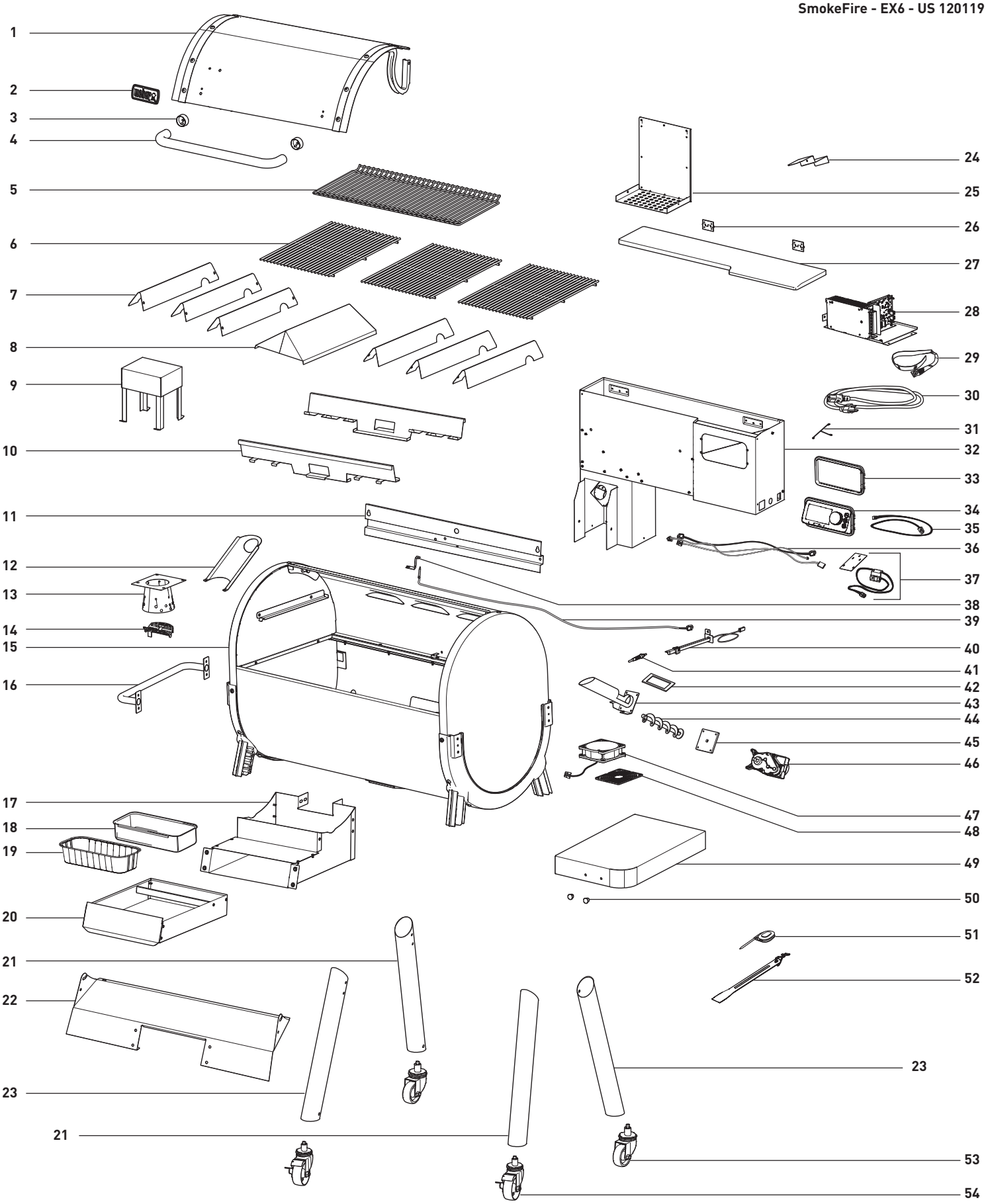

FCC Compliance: This equipment has been tested and found to comply with the limits for a Class B digital device, pursuant to part 15 of the FCC rules. These limits are designed to provide reasonable protection against harmful interference in a residential installation. This equipment generates, uses and can radiate radio frequency energy and, if not installed and used in accordance with the instructions, may cause harmful interference to radio communications. However, there is no guarantee that interference will not occur in a particular installation. If this equipment does cause harmful interference to radio or television reception, which can be determined by turning the equipment off and on, the user is encouraged to try to correct the interference by one or more of the following measures: (1) Reorient or relocate the receiving antenna. (2) Increase the separation between the equipment and receiver. (3) Connect the equipment into an outlet on a circuit different from that to which the receiver is connected. (4) Consult the manufacturer, dealer or an experienced radio/TV technician for help. Changes or modifications not expressly approved by Weber could void the user's authority to operate this device.

Radio Frequency (RF) Exposure: This equipment complies with FCC and ISED Canada radiation exposure limits set forth for an uncontrolled environment. The user should avoid prolonged exposure within 20cm of the antenna, which may exceed the FCC or RSS-102 radio frequency exposure limits.

IC Compliance: This device contains license-exempt transmitter(s)/receiver(s) that comply with Innovation, Science and Economic Development Canada's license-exempt RSS(s). Operation is subject to the following two conditions: (1) This device may not cause interference; and (2) This device must accept any interference, including interference that may cause undesired operation of the device.

IFETEL Compliance: Operation of this unit is subject to the following two conditions: (1) this unit or device may not cause harmful interference, and (2) this unit or device must accept any interference, including interference that may cause undesired operation.

ULC/ORD-C2728 2013

UL2728A 2019

EN 1860-1:2017

EN 55014-1:2017

EN 55014-2:2015

Bluetooth® SMART

C US

NOM

Apple and the Apple logo are trademarks of Apple Inc., registered in the U.S. and other countries. App Store is a service mark of Apple Inc. Android is a trademark of Google LLC. Google Play and the Google Play logo are trademarks of Google LLC.

The Bluetooth® word mark and logos are registered trademarks owned by Bluetooth SIG, Inc. and any use of such marks by Weber-Stephen Products LLC is under license. Other trademarks and trade names are those of their respective owners.

© 2019 Designed and engineered by Weber-Stephen Products LLC,
1415 S. Roselle Road, Palatine, Illinois 60067 USA.

WEBER-STEPHEN PRODUCTS LLC
www.weber.com

© 2020 Designed and engineered by Weber-Stephen Products LLC,
1415 S. Roselle Road, Palatine, Illinois 60067 USA.