What's in the Box

LED Strip Light*1	HDMI Sync Box*1	Control Box*1
HDMI Cable*1 For HDMI Port	Power Adapter*1 For Sync Box	Power Adapter*1 For Control Box
USB A–A Cable*1 For Data Port	Fixing Clip*14	

Installation Instructions

Cautions:
(a) Please install the strip light according to national standards and local electrical codes.
(b) It is strictly forbidden to install this product with power on.
(c) Do not cut the strip light.
(d) Avoid bending the part with LED components so as not to damage the strip light or shorten its service life.
(e) Remove nails, metal or conductive objects from the surface the strip light will be installed on and keep it clean and dry before installation.

Installation

1. Tear off the release paper from the back of the strip light, firmly stick it on the TV (from the bottom left) and reinforce with fixing clips at four corners.
2. Connect the strip light to the control box, then plug the corresponding adapter into the control box.
3. Connect the control box to the sync box, then plug the corresponding adapter into the sync box.
4. Connect Apple TV, Blu-Ray player, or gaming console to HDMI IN port.
5. Connect any output device such as a TV or monitor to the HDMI OUT port.

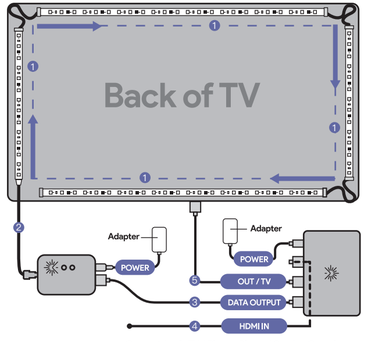

Connect Apple TV / Blu-ray Player / Gaming Console

HDMI Sync Box

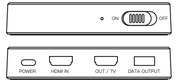

Features

- Support video resolution up to 4K@60Hz, HDR. (available only for HDMI-2.0, HDCP 2.2)
- 1 HDMI IN and 1 HDMI OUT for connecting to media devices.
- Support hot swap.
- Synchronize the color information of the images from the input device to the strip light to achieve the rendering effect via lighting.

Electrical parameters

Input Power	DC5V 1.5A
Power	7W
Data Interface	TYPE-C
Certification	FCC / CE
Adapter Parameters	Input: 100~240V AC50/60HZ 0.3A Output: DC5V/1.5A

Software Function

- 1 HDMI input
- 1 HDMI output
- Support HDMI 1.4/2.0
- Support up to 4k@60Hz (available only for HDMI-2.0, HDCP 2.2)
- Support HDR
- Support HDR10+
- Support Dolby Vision
- Support HDCP1.4/2.2
- Supports the CEC (Consumer Electronics Control) function.
  Note: available only with output and input devices that support this function

Supported Frequency and Color Format

Note:
(a) This product maximum supports 3840*2160p (4K).
(b) This product does not support 2560*1440P (2K).

Color Format	Bit Depth	24Hz	25Hz	30Hz	50Hz	60Hz
RGB	8	✓	✓	✓	✓	✓
RGB	10	✓	✓	✓	✓	✓
RGB	12	✓	✓	✓	✓	✓
YCbCr444	8	✓	✓	✓	✓	✓
YCbCr444	10	✓	✓	✓	✓	✓
YCbCr444	12	✓	✓	✓	✓	✓
YCbCr422	8	✓	✓	✓	✓	✓
YCbCr422	10	✓	✓	✓	✓	✓
YCbCr422	12	✓	✓	✓	✓	✓
YCbCr420	8	✓	✓	✓	✓	✓
YCbCr420	10	✓	✓	✓	✓	✓
YCbCr420	12	✓	✓	✓	✓	✓

Control Box

Function of the Buttons

POWER:
Short press to turn ON/OFF the control box, the strip light will light up, and the indicator light will always be green.
Long press for more than 5s until the green indicator light changes to red breathing light, then you can enter the APP to match the light.

MODE:
Short press to switch between 8 local modes.
Long press for more than 3s to switch to music mode.

Input Power	DC12V
Protocol	WiFi
Transmission Frequency	2.4GHz
Control Method	APP / Remote Control
Wired Signal Synchronization	HDMI (USB Interface)
Output Power	DC12V
Output Signal	SPI

Smarter Light, Easier Life.

Made in China

Email: support@azoula.com
For more details, please visit: www.azoula.com

Connect to Smart Device

Make sure your smart device is connected to a secure 2.4GHz network.

1. Download "Azoula Pixels" from Google Play or Apple App Store and install, then register as instructed.

Azoula Pixels

GET IT ON Google Play
Download on the App Store

2. Press POWER button once to turn on the strip light.
   Long press for more than 5s until the green indicator light changes to red breathing light, then you can start to match the light.

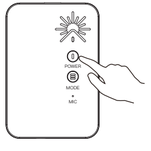

3. Open the App, follow the on-screen instructions to add your light.

4. Select 2.4GHz Wi-Fi network and enter password to complete connection.

Control with APP

To customize the lighting yourself, make sure that sync mode is not selected. You can exit the sync mode on APP or by pressing on remote control.

About
Information about the device or other settings.

Static Color Settings
Customize the color or brightness for the whole or section.

Dynamic Scene Settings
Select a preset scene (44 scenes available), edit or add a new scene.

Rhythm Collection
Select the mic of the light (6 local modes) or smart device (3 APP modes) to collect rhythm.

Plan
Set countdown timer or timer to automatically turn the light on/off.

Power ON / OFF
Touch to turn ON / OFF the light strip.

FCC STATEMENT

This equipment has been tested and found to comply with the limits for a Class B digital device, pursuant to Part 15 of the FCC Rules. These limits are designed to provide reasonable protection against harmful interference in a residential installation. This equipment generates uses and can radiate radio frequency energy and, if not installed and used in accordance with the instructions, may cause harmful interference to radio communications. However, there is no guarantee that interference will not occur in a particular installation. If this equipment does cause harmful interference to radio or television reception, which can be determined by turning the equipment off and on, the user is encouraged to try to correct the interference by one or more of the following measures:
-- Reorient or relocate the receiving antenna.
-- Increase the separation between the equipment and receiver.
-- Connect the equipment into an outlet on a circuit different from that to which the receiver is connected.
-- Consult the dealer or an experienced radio/TV technician for help.
This device complies with part 15 of the FCC Rules. Operation is subject to the following two conditions:
(1) This device may not cause harmful interference, and (2) this device must accept any interference received, including interference that may cause undesired operation.
Changes or modifications not expressly approved by the party responsible for compliance could void the user's authority to operate the equipment.

Radiation Exposure Statement

This device complies with FCC radiation exposure limits set forth for an uncontrolled rolled environment. This device should be installed and operated with a minimum distance of 20cm between the radiator and your body.

Azoula

TV Backlight with HDMI Sync Box

User Manual

AZ001-55