Wi-Fi Endoscope Camera

User Manual

Wi Fi HD

Contents

General Information ---------- **4**
Manual ---------- 4
Notes ---------- 4
Storage and transport ---------- 4
Information on disposal ---------- 4

Overview ---------- **5**
Description ---------- 5
Applications ---------- 5
Safety ---------- 5

Technical Data ---------- **6**

Functions ---------- **7**
Product details ---------- 7
Start to use ---------- 8
PC users ---------- 9
iPhone and iPad users ---------- 10
Android smartphone users ---------- 11
Other platform users ---------- 12

Other information ---------- **13**
Wi-Fi Bridge function ---------- 13

Troubleshooting ---------- **14**

General Information

Manual:
This operation manual allows you to work safely with the Wi-Fi Endoscope. Please keep this manual for your Information.
Liability is void for any damage caused by not following this manual.

Notes:

Warning!
Failure to follow the warnings and instructions may result in electric shock, fire and/or serious injury.

Attention!
Not following this note can cause permanent damage to the device.

Tips!
Useful information.

Storage and transport:
Improper transport can harm the device.
Always transport this device in the provided box in order to prevent damage.

Information on disposal:
Electronic equipment does not belong into domestic waste, but must be disposed in accordance with the applicable statutory provisions.

Description

This new Wi-Fi Endoscope camera is a portable, hand-held, multifunctional inspection camera system featuring an ultra-small size of 8.5mm diameter camera, a high quality digital sensor offering crystal clear output. The powerful wireless module provides a stable Wi-Fi connection. Users can view the videos on iPhones, iPads, Android devices and PCs, as well as capturing images (JPG)and recording 720p HD videos (AVI) with the bundled application.

Applications

This premier tool is an economical solution for:

- Automotive / Diesel Repair and Maintenance
- Inspection of hard-to-reach or hard-to-see area or equipment
- Plumbing, construction, restoration applications
- Science Education
- Outdoor Exploration

This appliance is not intended for medical use or personal inspection.

Safety

- Keep the tool dry, clean, free from oil, water, gas or other materials capable of causing corrosion.
- This appliance is not intended for use by persons with limited physical, sensory or mental capabilities.
- Keep bystanders, children away while operating the tool.
- Do not overreach, keep proper footing and balance at all times.

Technical Data

Description	Data
Network Standard	IEEE 802.11 b/g/n
Antenna	Built-in antenna 2.4GHZ
Operating Frequency	802.11 b/g/n
Data Rate	up to 150Mbps
Camera Diameter	8.5mm
Shaft Diameter	7.0 mm
Image Sensor	2.0 Megapixel CMOS
Video Resolution	800x600,1024x768,1280x720
Viewing angle	60°
Depth of Field	60mm—100mm
Camera Light Source	6 adjustable high-intensity LEDs
IP Code	IP67
LED Flash light	1W CREE LED
Operating Temperature	32° to 113° F (0° to 45° C)
Power Source	4XAA battery
Max battery life	2-3 hours
Certifications	CE RoHS

Product Details

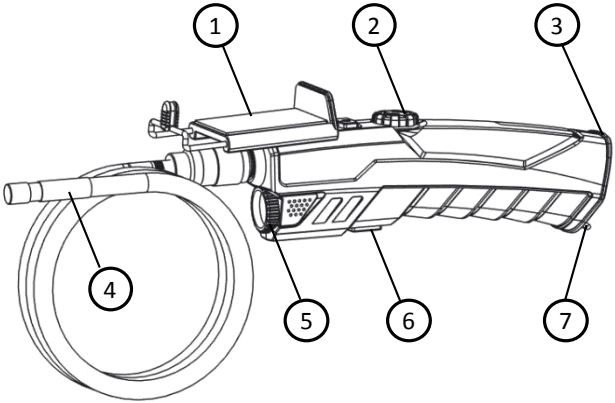

1.Phone Holder
2.LED Adjust wheel
3.Battery compartment
4.Camera
5.Flash light
6.Flash light On/Off
7.String
8.Probe connector
9.Support for Phone holder
10.Reset hole
11.Power On/Off
(LED Indicator: the LED will shine BLUE when the device is On, or shine RED when the battery voltage is low)

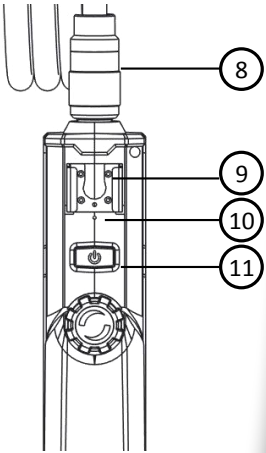

Start to use

- Open the battery compartment
- Insert 4 AA batteries

Please ensure correct polarity

Please use Alkaline or rechargeable Ni-MH battery for long working time.

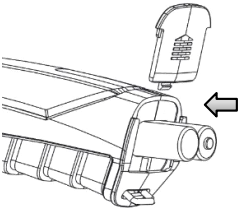

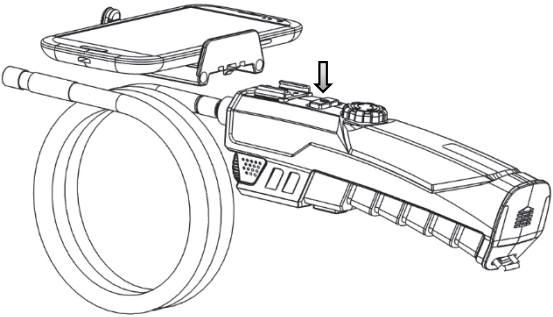

- Press the Power On/Off button to turn on the device
- Fit the phone holder to the support if you want to use the device with a smartphone attached.

Now the Wi-Fi Endoscope is ready to use, you can connect your PC, iPhone, iPad or Android smartphone to this device to view, capture photos or record videos.

PC users

- Search the Wi-Fi signal SSID is " WiFi_Endoscope"
- Connect your PC to the Wi-Fi Endoscope.
  Password is 00000000
- Copy the software: "Smart Camera.exe" from the bundled CD to your PC and run.
- Select" IP Camera: Wifi Endoscope" in the device menu, then you can see the live video in Preview area.

Preview area

Record video

Take photo

Select device

Set resolution

Camera settings

Photo and Video Album

Change Wi-Fi name and password

iPhone and iPad users

- Search" WiFi Endoscope" on iTunes Store and install the app.
- Enter "Settings"-"Wi-Fi settings" and search the SSID:"WiFi_Endoscope", connect to it with password:00000000
- Run the app and select" Wifi Endoscope", then you can see the live video in Preview area.

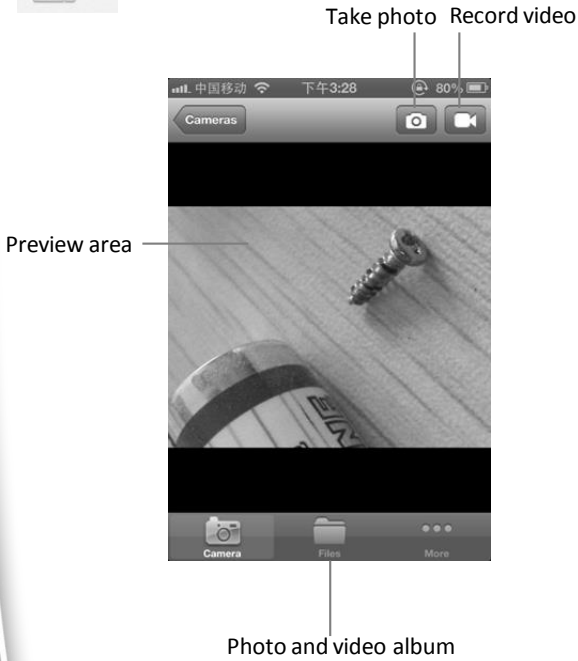

Android smartphone users

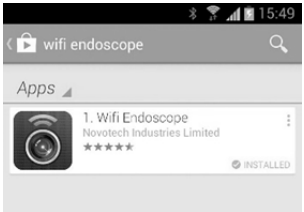

Search "WiFi Endoscope" On Google Play Store and install the app.

- Enter "Settings"-"Wi-Fi settings" and search the SSID "WiFi_Endoscope", connect to it with password:00000000
- Run the app and select" Wifi Endoscope", then you can see the live video in Preview area.

Please do not select the check box of" Check for Internet service" in the advanced Wi-Fi settings menu.

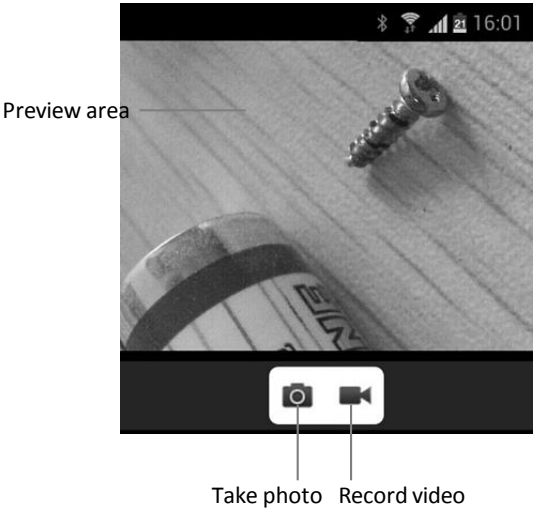

Other platform

Users with devices running other platforms can watch the video with an Internet browser (HTML5 support required). After connected to this Wi-Fi Endoscope, open the Internet Browser and go to: http://192.168.1.1, you can see the web page as below, press the button" Preview Camera" to enter the video page to watch the live video.

You can also enter this URL directly to watch the video: http://192.168.1.1:8080/stream_simple.html

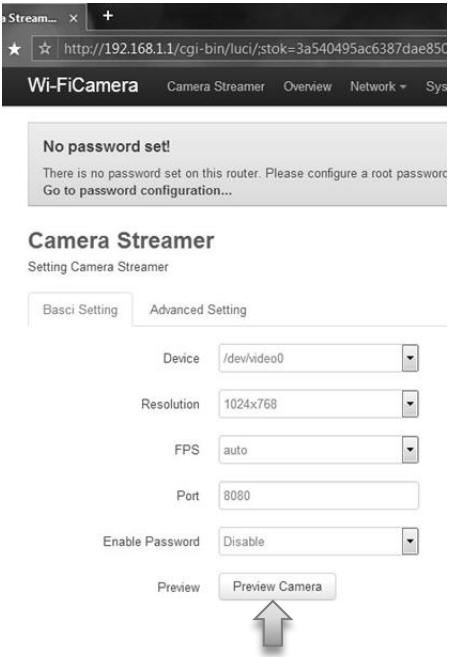

Wi-Fi Bridge function

Users can connect to internet with" Wi-Fi Bridge" function. You can connect to other Wi-Fi access point which has internet access and use Wi-Fi Endoscope at same time.

- Connect your PC or Smartphone to this Wi-Fi Endoscope
- Open an internet browser and go to: http://192.168.1.1
- Enter: Network—WiFi Bridge menu, you will see a webpage as below.
- Click "Scan" button to search other Wi-Fi signal in your area, then click" Join" button to establish connection with the access point(Wi-Fi password may required).click "Save & Apply" button to save the setting.
- Now you can use the Wi-Fi Endoscope with internet access.

Troubleshooting

- No image or defects, noise in the image
  -Check whether the probe is connected to the handle body correctly or reconnect the probe.
  -Check the battery polarity to make sure it's correct.
  -If batteries are exhausted, replace the batteries.
- LED lights are dim or blink
  -Batteries are Low
- Shut down the device and turn on again when it's not functioning normally.
- Forgot password
  -Use a pin to press the reset key for 7 seconds to reset the settings of the device.
  The default password is 00000000

If you have two or more Wi-Fi Endoscope devices and want to use them at the same time, you need to make sure that all the devices have different SSID, otherwise you'll need to change it manually.

Warning：

This device complies with Part 15 of the FCC Rules. Operation is subject to the following two conditions: (1) this device may not cause harmful interference, and (2) this device must accept any interference received, including interference that may cause undesired operation.

changes or modifications not expressly approved by the party responsible for compliance could void the user's authority to operate the equipment.
NOTE: This equipment has been tested and found to comply with the limits for a Class B digital device, pursuant to Part 15 of the FCC Rules. These limits are designed to provide reasonable protection against harmful interference in a residential installation. This equipment generates, uses and can radiate radio frequency energy and, if not installed and used in accordance with the instructions, may cause harmful interference to radio communications. However, there is no guarantee that interference will not occur in a particular installation.
If this equipment does cause harmful interference to radio or television reception, which can be determined by turning the equipment off and on, the user is encouraged to try to correct the interference by one or more of the following measures:
-- Reorient or relocate the receiving antenna.
-- Increase the separation between the equipment and receiver.
-- Connect the equipment into an outlet on a circuit different from that to which the receiver is connected.
-- Consult the dealer or an experienced radio/TV technician for help.
NOTE: This device and its antenna(s) must not be co-located or operation in conjunction with any other antenna or transmitter