LM-M8188FU3

802.11n 72.2Mbps WLAN
USB2.0 Module Specification

LawMate International Co.,Ltd.

Add: 3F, No.34, Lane 60, Wenhu St., Nei-Hu District, Taipei, Taiwan

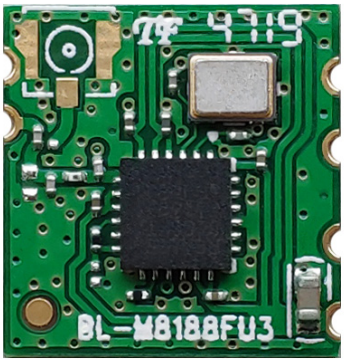

（Top View）

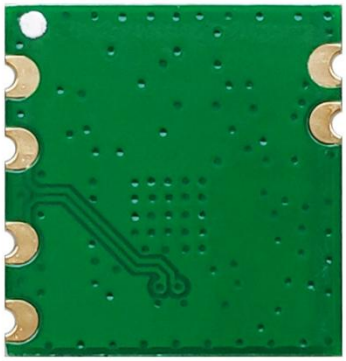

（Bottom View）

Module Name: LM-M8188FU3	
Module Type: 802.11b/g/n 72.2Mbps WLAN USB2.0 Module	
Revision: V2.0.1	
Customer Approval:	
Company:	
Title:	
Signature:	Date:
Approval:	
Title:	
Signature:	Date:

Revision History

Revision	Summary	Release Date	Revised By
2.0.0	Content optimization	2023-03-29	Qx
2.0.1	Official release	2024-03-11	Garry

1. Introduction

LM-M8188FU3 is a highly integrated 1T1R Single-band WLAN module. It compatible IEEE 802.11 b/g/n standard and provides the maximum PHY rate up to 72.2Mbps, offering feature-rich wireless connectivity and delivering reliable, giving end users the highest cost performance. On-chip 2M flash, extend to 4M, support transparent download, in buffer mode.

1.1 Features

- Operating Frequencies: 2.4~2.4965GHz
- Host Interface is USB 2.0
- IEEE Standards: IEEE 802.11b/g/n
- Wireless PHY rate can reach up to 72.2Mbps
- Connect to external antenna through the half hole
- Power Supply: DC3.3V±0.2V

1.2 Block Diagram

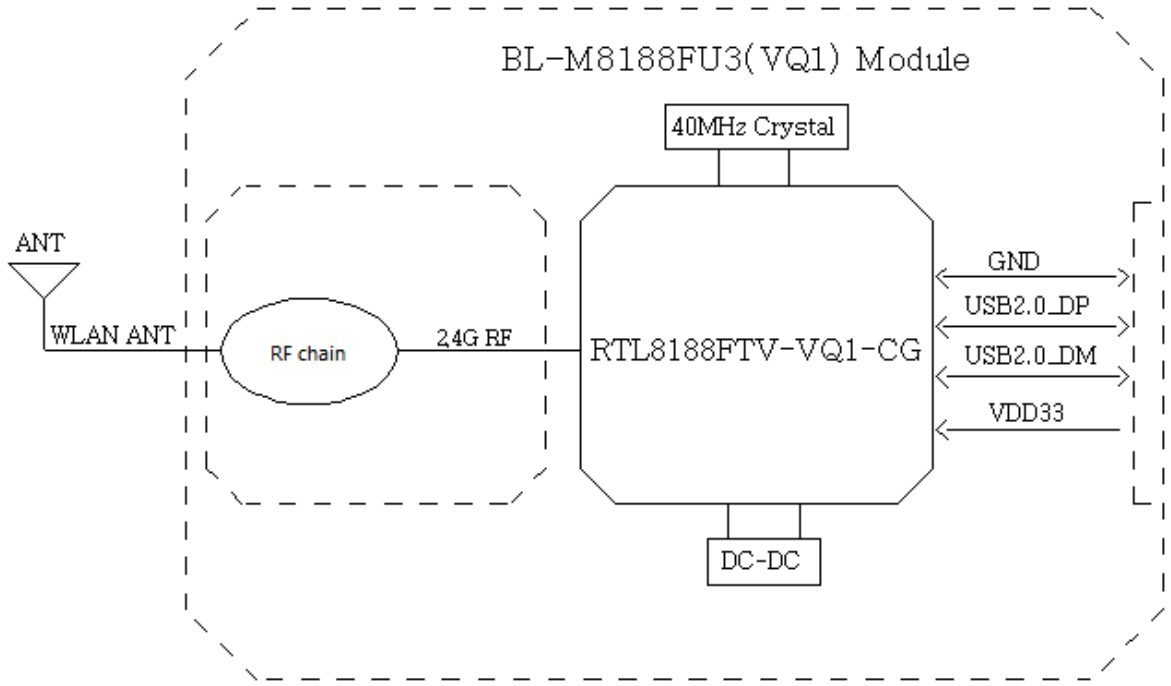

1.3 General Specifications

Module Name	LM-M8188FU3
Chipset	RTL8188FTV-VQ1-CG
WLAN Standards	IEEE802.11b/g/n
Host Interface	USB2.0
Antenna	Connect to external antenna through the half hole
Dimension	13.0*12.3*1.8mm (L*W*H)
Power Supply	DC 3.3V±0.2V @ 500 mA(Max)
Operation Temperature	-20℃ to +70℃
Operation Humidity	10% to 95% RH (Non-Condensing)

2. Pin Assignments

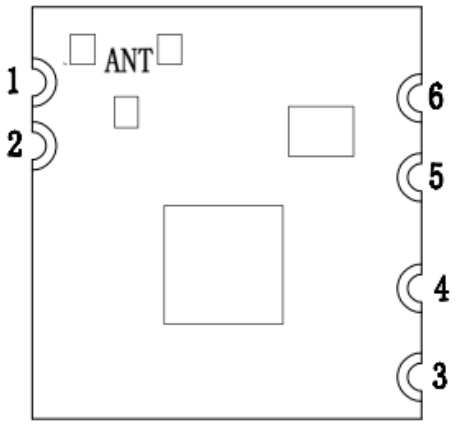

(Top View)

2.1 Pin Definition

No.	Pin Name	Type	Level	Module Pin Description
1	GND	RF		RF Ground connections
2	WLAN_ANT	RF		RF PAD for 2.4G WLAN ANT
3	VDD33	P		DC 3.3V Power Supply
4	USB2.0_DM	A I/O		USB2.0 Transmitter/Receiver Differential Pair

5	USB2.0_DP	A I/O		USB2.0 Transmitter/Receiver Differential Pair
6	GND	P		Power Ground
	ANT	RF		NC (Reserved IPEX for 2.4G WLAN ANT)

P: Power or Ground; I/O: In/Output; I: Input; A I/O: Analog In/Output; AI: Analog Input; AO: Analog Output; RF: Analog RF Port or RF Ground;

3. Electrical and Thermal Specifications

3.1 Recommended Operating Conditions

Parameters		Min	Typ	Max	Units
Ambient Operating Temperature		-20	25	70	℃
External Antenna VSWR			1.7	2	/
Supply Voltage	VDD33	3.1	3.3	3.5	V

3.2 Current Consumption

Conditions : VDD33=3.3V ; Ta:25℃			
Use Case	VDD33 Current (average)		
	Typ	Max	Units
WLAN Unassociated (Linux Driver)	40	60	mA
WLAN TRX Throughput(Linux Driver)	276	293	mA
2.4G 11b 1Mbps TX @17dBm (RF-Test)	272	331	mA
2.4G 11b 11Mbps TX@17dBm (RF-Test)	305	320	mA
2.4G 11g 6Mbps TX @17dBm (RF-Test)	280	292	mA
2.4G 11g 54Mbps TX @15dBm (RF-Test)	270	285	mA
2.4G 11n HT20-MCS0 TX @17dBm (RF-Test)	277	290	mA
2.4G 11n HT20-MCS7 TX @15dBm (RF-Test)	272	285	mA
2.4G 11n HT20-MCS7 RX (RF-Test)	59	70	mA

4. WLAN RF Specifications

Conditions : VDD33=3.3V ; Ta:25℃	
Features	**Description**
WLAN Standard	IEEE 802.11b/g/n
Frequency Range	2.4~2.4965GHz
Channels	Ch1~Ch14 (For 20MHz Channels)
Modulation	802.11b (DSSS): DBPSK, DQPSK, CCK; 802.11g (OFDM): BPSK, QPSK, 16QAM, 64QAM; 802.11n (OFDM): BPSK, QPSK, 16QAM, 64QAM;
Data Rate	802.11b: 1, 2, 5.5, 11Mbps; 802.11g: 6, 9, 12, 18, 24, 36, 48, 54Mbps; 802.11n (HT20): MCS0~MCS7(1T1R_SISO) 6.5~72.2Mbps;
Frequency Tolerance	≦±20ppm

2.4G Transmitter Specifications(TX power of some rates is calibrated, customers can define the target TX power of other rates by modifying configuration file of the driver software. Customers must define the TX power same or lower than recommended Target TX Power as below)			
TX Rate	**TX Power (dBm)**	**TX Power Tolerance (dBm)**	**EVM (dB)**
802.11b@1Mbps	Recommended Target TX Power :17	±1	≦-10
802.11b@11Mbps	Calibrated TX Power :17	±1	≦-15
802.11g@6Mbps	Recommended Target TX Power :16	±1	≦-10
802.11g@54Mbps	Calibrated TX Power :16	±1	≦-25
802.11n@HT20_MCS0	Recommended Target TX Power :16	±1	≦-10
802.11n@HT20_MCS7	Calibrated TX Power :16	±1	≦-28
2.4G Receiver Specifications			
RX Rate	**Min Input Level (Typ,dBm)**	**Max Input Level (Typ,dBm)**	**PER**
802.11b@1Mbps	-92	-10	< 8%
802.11b@11Mbps	-86	-10	< 8%
802.11g@6Mbps	-90	-15	< 10%
802.11g@54Mbps	-72	-15	< 10%
802.11n@HT20_MCS0	-88	-15	< 10%
802.11n@HT20_MCS7	-72	-15	< 10%

5.Mechanical Specifications

5.1 Module Outline Drawing

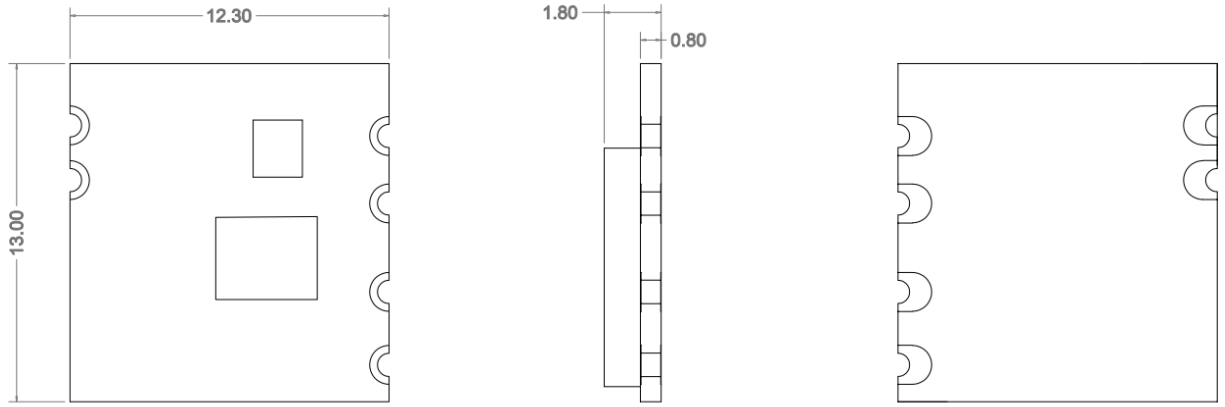

(Top View) (Side View) (Bottom View)

Module dimension: 13.0*12.3*1.8mm (L*W*H; Tolerance: ±0.3mm_L/W, ±0.2mm_H)

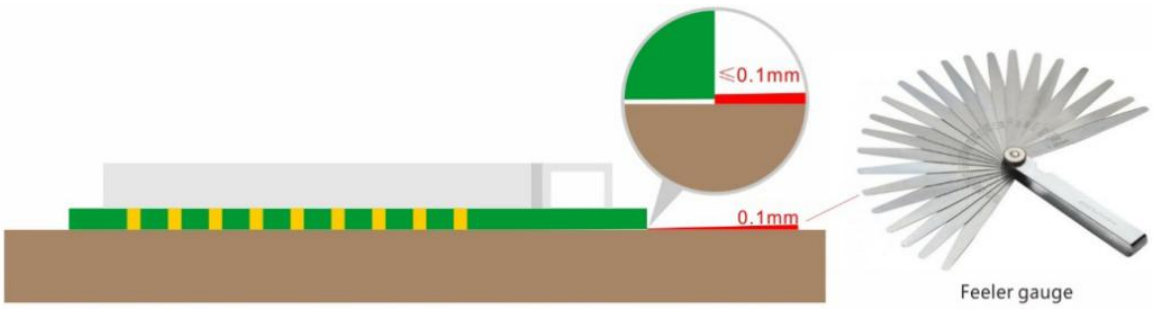

Module Bow and Twist: ≤0.1mm

5.2 Mechanical Dimensions

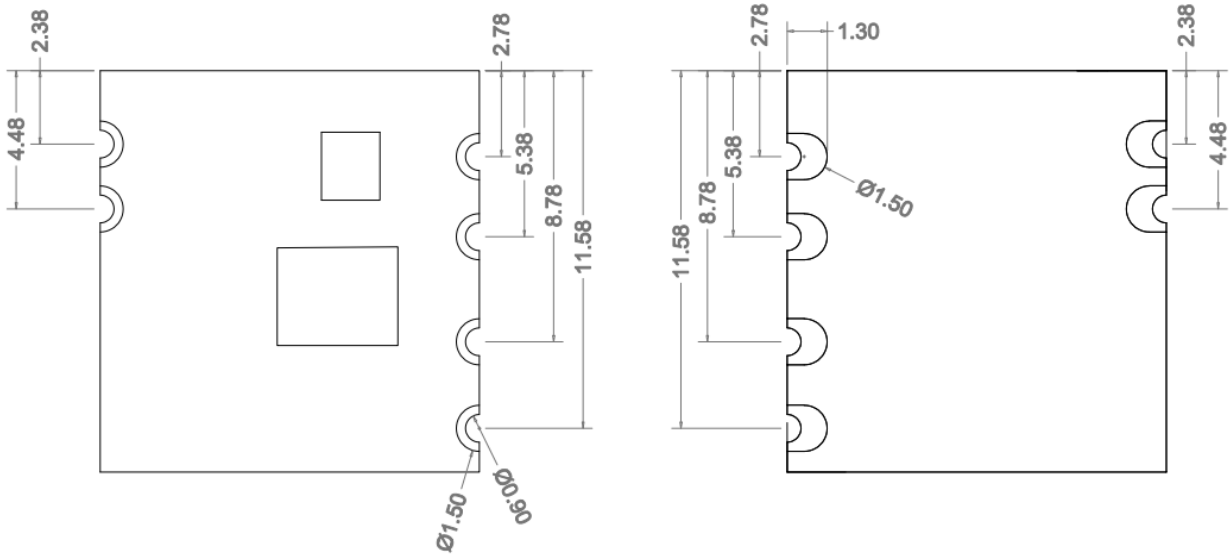

(Top View) (Bottom View)

6. Application Information

6.1 Typical Application Circuit

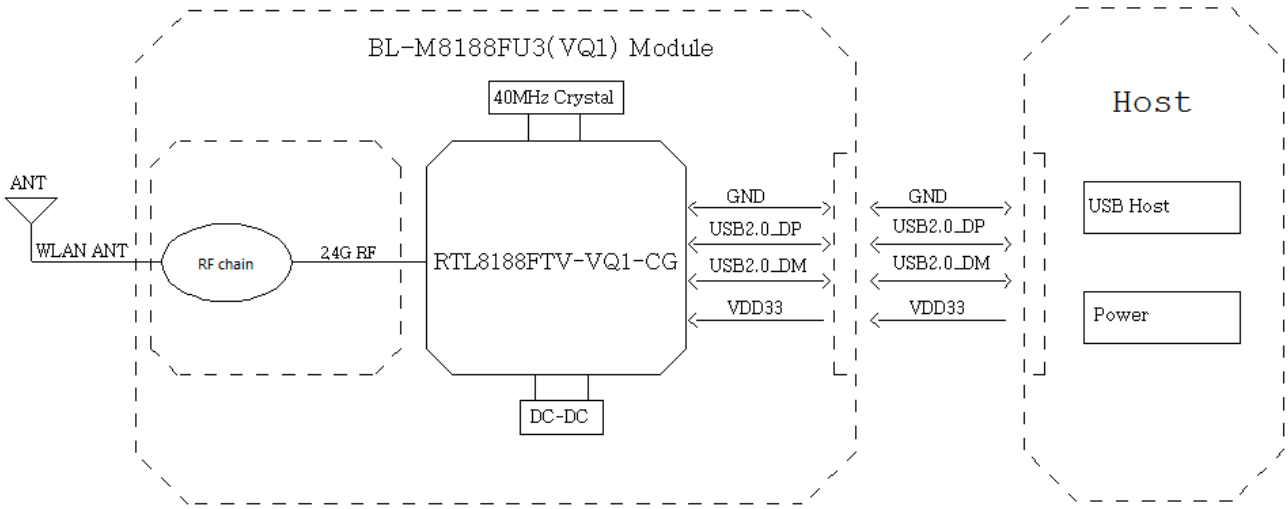

6.2 HW Application Note

6.2.1 VDD33 Power requirement:

A、DC 3.1~3.5V & Ripple Voltage <100mV power supply input, Maximum Peak current≥0.5A.

B、For achieve fast transient response，a current mode buck converter recommended.

C、On customer's motherboard, use 10uF and 100nF MLCC capacitors close to the module`s VDD33 Pin for power input decoupling. Each GND Pin has three close vias to ensure connectivity and thermal conductivity.

6.2.2 USB interface Design Guidelines:

A、The module provides a USB device interface which is compatible with USB2.0 specification, High-Speed mode supports data transmission rate up to 480Mbps.

B、On customer's motherboard, PCB traces of the USB high-speed signal pair should be maintain 90Ω differential impedance, structure of "Differential Coated Coplanar Waveguide With Ground" with the advantages of impedance control and GND surrounding isolation interference may be an ideal choice. To avoid interference, USB signal pair must be far away from power, RF and other signals, GND copper can be used to surround and isolate them.

C、PCB traces of the USB high-speed signal pair as short as possible, as far away from other signal as possible, minimize the length mismatch of signal pair, avoid layer change and maintain a complete reference layer to reduces signal reflections and impedance changes.

D、If It is necessary to change layers for USB signal pair routing, use GND vias close to signal pair`s vias as the shortest return path.

6.2.3 RF Path Design Guidelines:

A、On customer's motherboard, keep complete GND copper area under and around the module, do not route Power, RF, USB and other signals there to avoid interfering with the module causing RF performance derating problem.

B、PCB traces of the RF path as short as possible, as far away from other signal as possible, avoid layer change, and should be maintain continuous 50Ω characteristic impedance, structure of "Coated Coplanar Waveguide With Ground" with the advantages of impedance control and GND surrounding isolation interference may be an ideal choice. It is necessary to maintain a complete GND reference layer below the RF path area.

C、RF Pin and antenna PAD/RF connector PAD on customer's motherboard are significantly wider than PCB traces of the RF path, which will cause RF impedance discontinuity. To improve this problem, in addition to adjusting the local impedance of these PADs, a "π" circuit can be reserved near the antenna/RF connector which can match both RF path impedance and antenna impedance.

6.3 Recommend PCB Layout Footprint

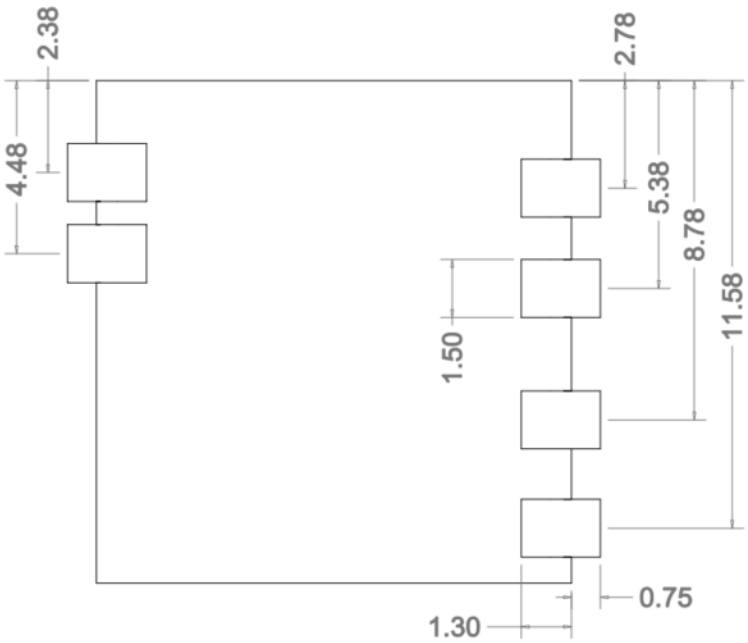

(Design Unit: mm)

6.4 Reflow Soldering Standard Conditions

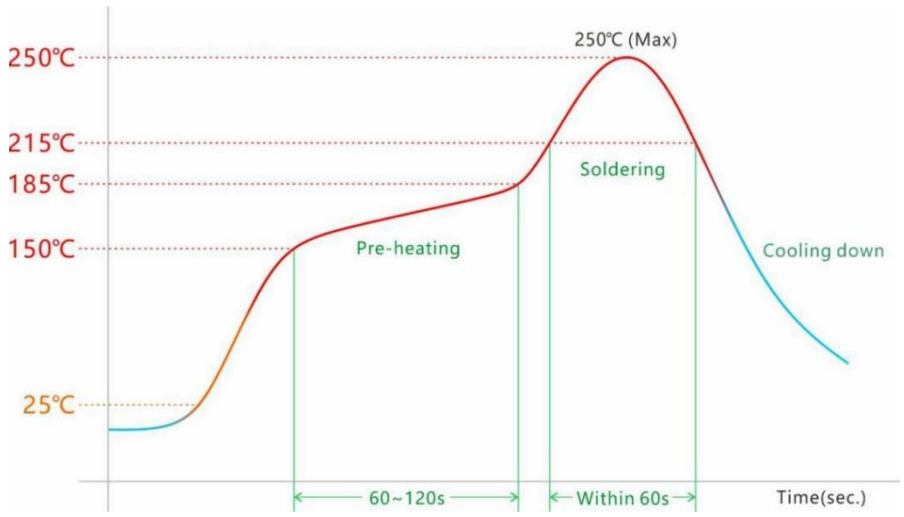

Please use the reflow within 2 times.
Set up the highest temperature within 250℃.

7. Key Components Of Module

No.	Parts	Specification	Manufacturer	Note
1	Chipset	RTL8188FTV-VQ1-CG	Realtek Semiconductor Corp.	
2	PCB	LM-M8188FU3	ShenZhen Tie Fa Technology Limited	
			SHEN ZHEN QILI ELECTRON CO.,LTD	
			MILLION SOURCE PRINTED CIRCUIT BOARD CO.,LTD	
3	Crystal	40MHz-3225	Chengde oscillator Electronic Technology CO.,LTD	
			HUBEI TKD CRYSTAL ELECTRONIC SCIENCE AND TECHNOLOGY CO.,LTD	
			SHENZHEN KAIYUEXIANG ELECTRONICS CO.,LTD	
			JinHua East Crystal Electronic CO.,LTD	

8. Package and Storage Information

8.1Package Dimensions

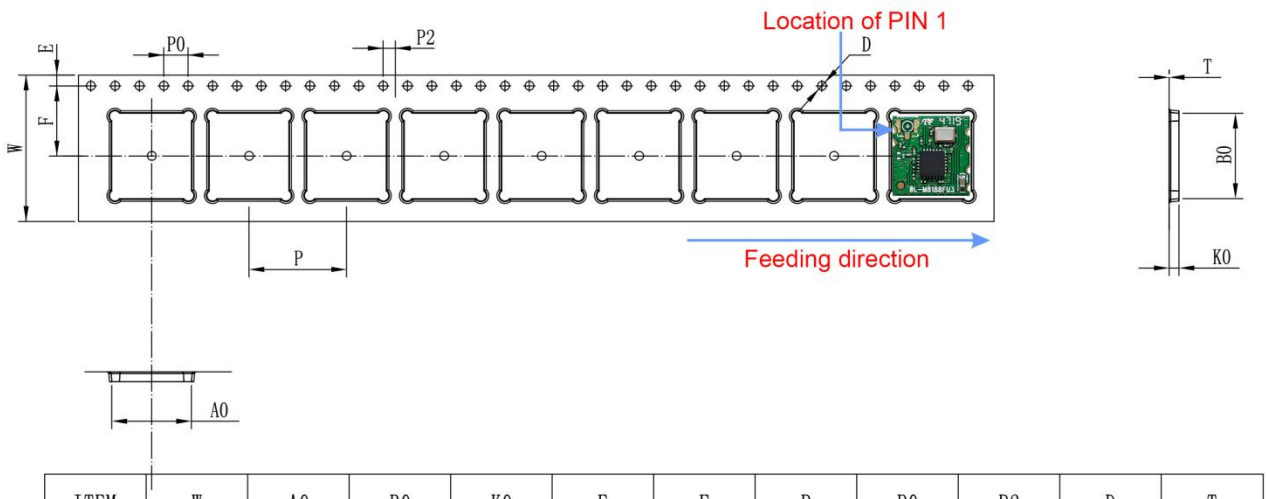

ITEM	W	A0	B0	K0	E	F	P	P0	P2	D	T
DIM	24.00+0.3	12.65±0.1	13.60±0.1	1.80±0.1	1.75±0.1	11.5±0.1	16.00±0.1	4.00±0.1	2.00±0.1	Ø1.5±0.1	0.30±0.05

Package specification:

1. 2,000 modules per roll and 10,000 modules per box.
2. Outer box size: 37.5*36*29cm.
3. The diameter of the blue environment-friendly rubber plate is 13 inches, with a total thickness of 28mm (with a width of 24mm carrying belt).
4. Put 1 package of dry agent (20g) and 1 humidity card in each anti-static vacuum bag.
5. Each carton is packed with 5 boxes.

8.2 Storage Conditions

Absolute Maximum Ratings:

Storage temperature: -40℃ to +85℃,
Storage humidity: 10% to 95 (Non-Condensing)

Recommended Storage Conditions:

Storage temperature: 5℃ to +40℃,
Storage humidity: 20% to 90% RH

Please use this Module within 12month after vacuum-packaged.

The Module shall be stored without opening the packing.
After the packing opened, the Module shall be used within 72hours.
When the color of the humidity indicator in the packing changed,
The Module shall be baked before soldering.
Baking condition: 60℃, 24hours, 1time.

ESD Sensitivity:

ESD Protection: 2KV(HBM ,Maximum rating)
The Module is a static-sensitive electronic device.
Do not operate or store near strong electrostatic fields.
Take proper ESD precautions!

ESD CAUTION

FCC Statement

This device complies with part 15 of the FCC rules. Operation is subject to the following two conditions: (1) this device may not cause harmful interference, and (2) this device must accept any interference received, including interference that may cause undesired operation.

Changes or modifications not expressly approved by the party responsible for compliance could void the user's authority to operate the equipment.

NOTE: This equipment has been tested and found to comply with the limits for a Class B digital device, pursuant to part 15 of the FCC Rules. These limits are designed to provide reasonable protection against harmful interference in a residential installation. This equipment generates uses and can radiate radio frequency energy and, if not installed and used in accordance with the instructions, may cause harmful interference to radio communications. However, there is no guarantee that interference will not occur in a particular installation. If this equipment does cause harmful interference to radio or television reception, which can be determined by turning the equipment off and on, the user is encouraged to try to correct the interference by one or more of the following measures:

- Reorient or relocate the receiving antenna.
- Increase the separation between the equipment and receiver.
- Connect the equipment into an outlet on a circuit different from that to which the receiver is connected.
- Consult the dealer or an experienced radio/TV technician for help important announcement

Important Note:

Radiation Exposure Statement

This equipment complies with FCC radiation exposure limits set forth for an uncontrolled environment. This equipment should be installed and operated with minimum distance 20cm between the radiator and your body.

This transmitter must not be co-located or operating in conjunction with any other antenna or transmitter.

Country Code selection feature to be disabled for products marketed to the US/Canada.

This device is intended only for OEM integrators under the following conditions:

1. The antenna must be installed such that 20 cm is maintained between the antenna and users, and
2. The transmitter module may not be co-located with any other transmitter or antenna,

As long as the conditions above are met, further transmitter testing will not be required. However, the OEM integrator is still responsible for testing their end-product for any additional compliance requirements required with this module installed.

Important Note:

In the event that these conditions cannot be met (for example certain laptop configurations or co-location with another transmitter), then the FCC authorization is no longer considered valid and the FCC ID cannot be used on the final product. In these circumstances, the OEM integrator will be responsible for re-evaluating the end product (including the transmitter) and obtaining a separate FCC authorization.

End Product Labeling

The final end product must be labeled in a visible area with the following"

Contains FCC ID: **2AHTX-LM-M8188FU3** "

Manual Information to the End User

The OEM integrator has to be aware not to provide information to the end user regarding how to install or remove this RF module in the user's manual of the end product which integrates this module.

The end user manual shall include all required regulatory information/warning as show in this manual.

Integration instructions for host product manufacturers according to KDB 996369 D03 OEM Manual v01r01

2.2 List of applicable FCC rules

CFR 47 FCC PART 15 SUBPART C has been investigated. It is applicable to the modular transmitter

2.3 Specific operational use conditions

This module is stand-alone modular. If the end product will involve the Multiple simultaneously transmitting condition or different operational conditions for a stand-alone modular transmitter in a host, host manufacturer have to consult with module manufacturer for the installation method in end system.

2.4 Limited module procedures

Not applicable

2.5 Trace antenna designs

Not applicable

2.6 RF exposure considerations

This equipment complies with FCC radiation exposure limits set forth for an uncontrolled environment. This equipment should be installed and operated with minimum distance 20cm between the radiator & your body.

2.7 Antennas

This radio transmitter **FCC ID:2AHTX-LM-M8188FU3** has been approved by Federal Communications Commission to operate with the antenna types listed below, with the maximum permissible gain indicated. Antenna types not included in this list that have a gain greater than the maximum gain indicated for any type listed are strictly prohibited for use with this device.

Antenna No.	Model No. of antenna:	Type of antenna:	Gain of the antenna (Max.)	Frequency range:
2.4G WIFI	/	FPC Antenna	2.5	2402-2480MHz

2.8 Label and compliance information

The final end product must be labeled in a visible area with the following" Contains **FCC ID:2AHTX-LM-M8188FU3**".

2.9 Information on test modes and additional testing requirements

Host manufacturer is strongly recommended to confirm compliance with FCC requirements for the transmitter when the module is installed in the host.

2.10 Additional testing, Part 15 Subpart B disclaimer

Host manufacturer is responsible for compliance of the host system with module installed with all other applicable requirements for the system such as Part 15 B.

2.11 Note EMI Considerations

Host manufacture is recommended to use D04 Module Integration Guide recommending as "best practice" RF design engineering testing and evaluation in case non-linear interactions generate additional non-compliant limits due to module placement to host components or properties.

2.12 How to make changes

This module is stand-alone modular. If the end product will involve the Multiple simultaneously transmitting condition or different operational conditions for a stand-alone modular transmitter in a host, host manufacturer have to consult with module manufacturer for the installation method in end system. According to the KDB 996369 D02 Q&A Q12, that a host manufacture only needs to do an evaluation (i.e., no C2PC required when no emission exceeds the limit of any individual device (including unintentional radiators) as a composite. The host manufacturer must fix any failure.