DESIGNED TO MOVE [YOU]®

# JWM452

*MOBILE AUDIO SYSTEM*

# Installation and Owner's Manual

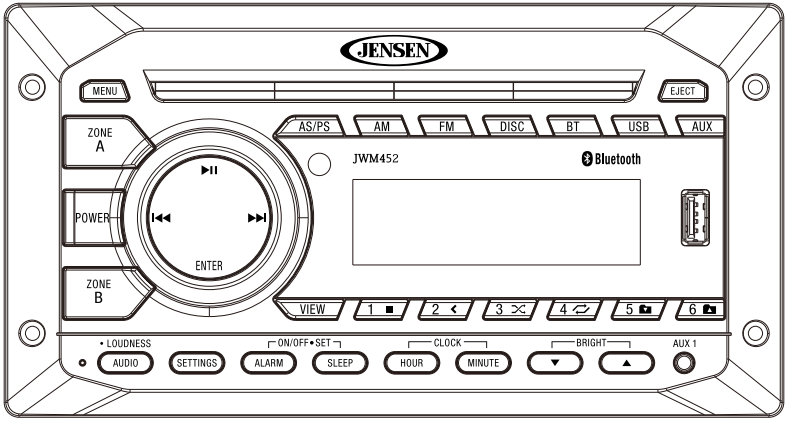

Introduction ..... 3
Disc Notes ..... 4
Installation ..... 5
Wiring ..... 6
Basic Operation ..... 7
Tuner Operation ..... 11
Disc Operation ..... 12
CD Operation ..... 12
DVD/VCD Operation ..... 13
MP3/USB Operation ..... 15
Bluetooth Operation ..... 17
Remote Control Operation ..... 19
DVD Setup Menu ..... 21
Care and Maintenance ..... 23
Troubleshooting ..... 23
Specifications ..... 24
FCC Notes ..... 24

# INTRODUCTION

## Thank you!

Thank you for choosing a Jensen product. We hope you will find the instructions in this owner's manual clear and easy to follow. If you take a few minutes to look through it, you'll learn how to use all the features of your new Jensen receiver for maximum enjoyment.

## Features

Features of Jensen JWM452 mobile audio system include:

- Digital AM/FM Tuner/30 Preset stations (12 AM/18 FM)
- Bluetooth Ready with A2DP/AVRCP Streaming Audio
- Electronic Bass, Treble, Balance and Fader Controls
- DVD/CD-R/RW and MP3 Compatible
- HDMI OUTPUT with ARC/CEC
- Time/Alarm Clock
- LCD Backlight Control
- 1/8" Front Auxiliary Audio/Video Input
- Rear Audio RCA Inputs/Outputs
- USB Playback of MP3/WMA Files
- 2 Zone / 4 Speaker Output
- Wireless Remote Control Included

## Precautions

- **Use the Proper Power Supply**
  This product is designed to operate with a 12 volt DC, negative ground battery system (the standard system in a North American vehicle)
- **Protect the Disc Mechanism.**
  Avoid inserting any foreign objects into the slot of this player. Failure to observe this may cause malfunction due to the precise mechanism of this unit.
- **Use Authorized Service Centers.**
  Do not attempt to disassemble or adjust this precision product; contact a professional for assistance.
- **Avoid Moisture**.
  To reduce the risk of fire or electric shock, do not expose this equipment to rain or moisture.
- **Avoid Cleaning Products.**
  The front of this unit should only be cleaned with a slightly damp cloth. Do not use cleansers.
- **Use Recommended Accessories**.
  TO REDUCE THE RISK OF FIRE OR ELECTRIC SHOCK AND ANNOYING INTERFERENCE, USE ONLY THE RECOMMENDED ACCESSORIES.

***CAUTION: This mobile DVD player is a Class I laser product that uses a visible/invisible laser beam which could cause hazardous radiation exposure if improperly directed. Be sure to operate the mobile DVD player as instructed. Use of controls or adjustments or performance of procedures other than those specified herein may result in hazardous radiation exposure. Do not open covers and do not attempt to repair the unit yourself. Refer servicing to qualified personnel.***

## Packing List

JWM452

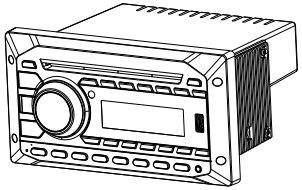

Remote Control

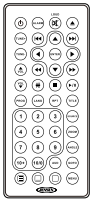

20-PIN Speaker Wire

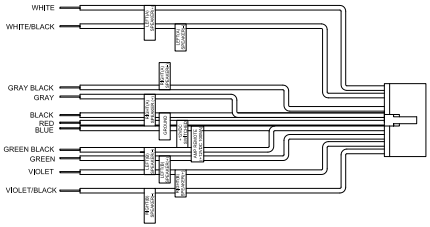

# DISC NOTES

Depending on the recording status, conditions of the disc, and the equipment used for recording, some CD-Rs/CD-RWs may not play on this unit. For more reliable playback, please adhere to the following recommendations:

- Use CD-RWs with speed 1x to 4x and write with speed 1x to 2x.
- Use CD-Rs with speed 1x to 8x and write with speed 1x to 2x.
- Do not play a CD-RW which has been written more than 5 times.

***NOTE: CD-R and CD-RW discs will not play unless the recording session is closed and the CD is finalized.***

## Disc Maintenance

- A dirty or defective disc may cause sound dropouts while playing. Before playing, wipe the disc using a clean cloth, working from the center hole towards the outside edge. Never use benzene, thinners, cleaning fluids, anti-static liquids or any other solvent.
- Be sure to use only round CDs for this unit and do not use any special shape CDs. Use of special shape CDs may cause the unit to malfunction.
- Do not stick paper or tape on the disc. Do not use CDs with labels or stickers attached or that have sticky residue from removed stickers.
- Do not expose discs to direct sunlight or heat sources such as hot air-ducts, or leave them in a vehicle parked in direct sunlight where there can be a considerable rise in temperature inside the vehicle.

| | | | |
|---|---|---|---|
| | | | |
| Insert label side up. | Do not bend. | Never touch the underside of the disc. | Wipe clean from this center to the edge. |

***NOTE: A disc may become scratched (although not enough to make it unusable) depending on how you handle it and other conditions in the usage environment. These scratches are not an indication of a problem with the player.***

# INSTALLATION

It's a good idea to read all of the instructions before beginning the installation. We recommend having your Jensen JWM452 installed by a reputable RV dealership.

## Tools and Supplies

You will need these tools and supplies to install your JWM452:

- Phillips screwdriver
- Wire cutters and strippers
- Tools to remove existing radio (screwdriver, socket wrench set or other tools)
- Electrical tape
- Crimping tool
- Volt meter/test light
- Crimp connections
- 16 gauge wire for power connections
- 16-18 gauge speaker wire
- Four M3x20mm (3/32 x 0.75") screws

## Disconnecting the Battery

To prevent a short circuit, be sure to turn off the ignition and remove the negative (-) battery cable prior to installation.

***NOTE: If the JWM452 is to be installed in a vehicle equipped with an onboard drive or navigation computer, do not disconnect the battery cable. If the cable is disconnected, the computer memory may be lost. Under these conditions, use extra caution during installation to avoid causing a short circuit.***

## Selecting the Mounting Location

Select a mounting location, taking care to avoid the following:

- Places exposed to heat-radiating appliances such as electric heaters
- Adjacent to other equipment that radiates heat
- Poorly-ventilated or dusty places
- Moist or humid locations

## Preparing the Opening

Use the mounting hole diagram ( right) to measure and cut a mounting hole, then mount the unit using four M3x20mm screws.

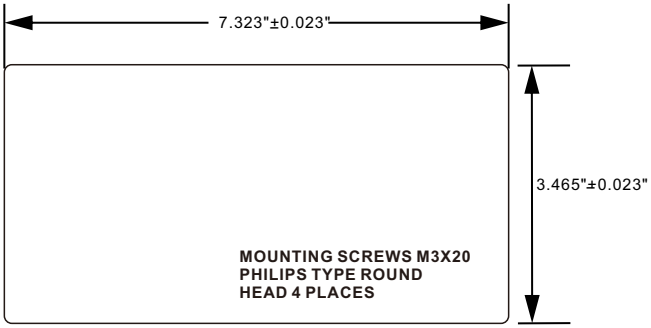


***NOTE: Before cutting the mounting hole, make sure the area behind the mounting location is clear of wires, fuel and vacuum or brake lines.***

# WIRING

The wiring diagram depicts all the wiring connections required for proper operation of the unit.

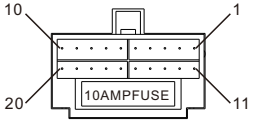


DETAIL A
SHOWN FROM PIN VIEW

| PIN NO. | WIRE COLOR | DESCRIPTION |
|---|---|---|
| 1 | VIOLET/BLACK | REAR RIGHT SPEAKER (-) |
| 2 | VIOLET | REAR RIGHT SPEAKER (+) |
| 3 | GREEN | REAR LEFT SPEAKER (+) |
| 4 | GREEN/BLACK | REAR LEFT SPEAKER (-) |
| 5 | N/A | N/A |
| 6 | GRAY | FRONT RIGHT SPEAKER (+) |
| 7 | GRAY/BLACK | FRONT RIGHT SPEAKER (-) |
| 8 | N/A | N/A |
| 9 | WHITE/BLACK | FRONT LEFT SPEAKER (-) |
| 10 | WHITE | FRONT LEFT SPEAKER (+) |
| 11 | N/A | N/A |
| 12 | N/A | N/A |
| 13 | N/A | N/A |
| 14 | BLUE | AMP REMOTE (+12VDC 100mA) |
| 15 | RED | +12VDC SWITCHED |
| 16 | BLACK | GROUND |
| 17 | N/A | N/A |
| 18 | N/A | N/A |
| 19 | N/A | N/A |
| 20 | N/A | N/A |

**WARNING:** Wiring harness comes with stripped and tinned leads to aid in the installation process. Any unused speaker wires must have their exposed ends cut off or insulated individually.

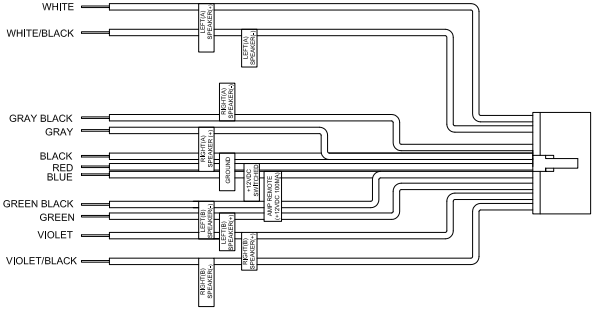


# CONNECTIONS

The wiring diagram depicts all the wiring connections required for proper operation of the unit.

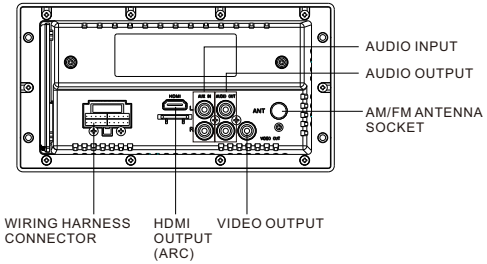

# BASIC OPERATION

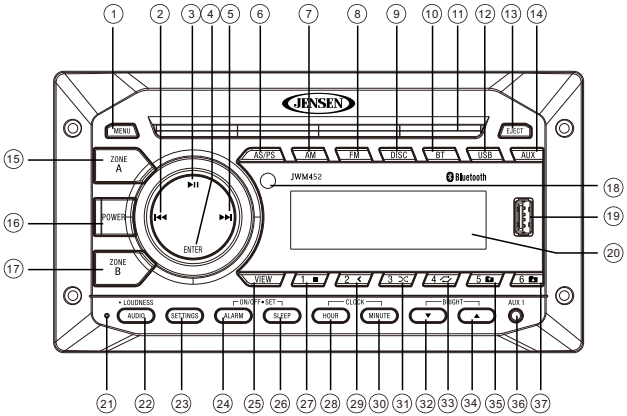


## Power

Press the **POWER** button (16) turn the unit on or enter standby mode. The unit will resume at the last mode (Tuner, Aux, etc.) after turn on.

## Volume Control

Rotate the **VOL** encoder knob control clockwise to increase or counter-clockwise to decrease the volume output.
The maximum volume setting is “40”. While adjusting the volume, the LCD displays numerical representation of the level.

## Audio Menu Setting

Press the **AUDIO** button (22) to step through the following audio adjustment options.
Rotate the **VOL/ENTER** encoder knob control to adjust the selected audio feature.

- The following audio menu items can be adjusted:
- BAS: Adjust the Bass level from "-7" to "+7".
- TRE: Adjust the treble from "-7" to "+7".
- BAL: Adjust the speaker output balance between "L7" (left) and "R7" (right).
- “BAL 0" indicates an equal balance between the left and right speakers.
- FAD: Adjust the speaker fade between “R7” (rear) and “F7” (front). “FAD 0” indicates and equal balance between the rear and front speakers.
- LOUDNESS: Toggle the loudness on/off. When listening to music at low volumes, this feature will boost the bass/treble range to compensate for the characteristics of human hearing.

***This function will time out after five seconds of inactivity and the unit will resume normal operation.***

## Loudness

Press and Hold the **AUDIO** button (22) to toggle the loudness function on/off.

## Pause/Mute

Press the ▶II button (3) to silence the audio output in tuner, CD, DVD, BT, USB, ARC or auxiliary input mode. Press again to restore the previous volume level.

## Liquid Crystal Display (LCD)

The liquid crystal display (LCD) panel (20) displays the frequency, time and activated functions.
Press the **BRIGHT UP** button (34) to increase the LCD brightness and press the **BRIGHT DOWN** button (32) to decrease the LCD brightness from “LEVEL 0” (off) to “LEVEL 8” (brightest)

***NOTE: When subjected to cold temperatures for an extended period of time, LCD panels will take longer to illuminate and the display visibility may slightly decrease. Optimal LCD operation will return to normal when the temperature increases to a normal range.***

## System menu setting

1. Press the **SETTINGS** button (23) to enter the system menu.
2. Press **SETTINGS** button or press the **|<<** or **>>|** ( 2,5) to choose the following system menu list.
3. Once the desired menu item appears on the display, adjust that option by rotating the volume encoder knob clockwise or counter-clockwise within 5 seconds.
4. Press the **ENTER** button (4) to confirm your selection and exit system menu. The unit will automatically exit the system menu after 5 seconds of inactivity.

The following audio menu items can be adjusted:

- Bluetooth Device (Locked/Unlocked, Disconnect/Connect, Delete): view, lock and delete from a list of previously paired mobile device models.
- Bluetooth Pair: Press **ENTER** button (4) to automatically pair a device.
- Bluetooth On/Off: Choose “Bluetooth On” or “Bluetooth Off”.
- Beep On/Off: Turn the audible beep On/Off (heard when functions /buttons are selected).
  ***Note: Beep tone off will not affect the audible tone of the alarm clock.***
- Brightness Level: Choose button and LCD brightness from 0-8.
- Region (USA/Europe): Set frequency spacing for various regions.
- Preset Volume PVOL (1-40): Select an automatic turn on volume.
- RESET: Press **ENTER** button (4) to reset the JWM452 to factory default settings.

## Auxiliary Input Function

Press the **AUX** button (14) to directly access auxiliary input modes (AUX IN1 and AUX IN2) from any other mode when a portable audio device is connected to the unit.
To connect a portable audio device, insert a standard 3.5mm (audio line output or headphone output from your portable CD / MP3 / iPod or other media player) into the AUX A/V IN connector (AUX IN1) (36) on the front of the unit or the AUDIO IN (AUX In2) on the back of the unit (see “Wiring” on page 4).

## Auxiliary Input Connector

For front panel A/V input, an external audio/video (A/V) source such as a video game player, camera, etc. can be connected to the front panel A/V input with 3.5mm A/V cable adapter (Please note that there are several different A/V cable "standards"). Connect the device to the AUX A/V IN connector (36) on the front panel.In addition to front panel auxiliary input source, the unit can also be connected to the RCA audio input through the AUX AUDIO INPUT jack on the rear of the unit.
Press the AUX button (14) to directly access auxiliary input modes (AUX 1 IN and AUX 2 IN) from any other mode when a portable audio device is connected to the unit.

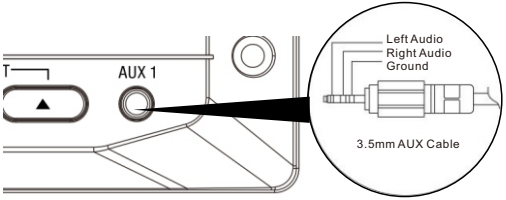


**USB Interface Connector**
You can connect a USB device directly to USB interface (19) on the front of the JWM452 for playback of compatible files. Playback begins automatically. Press the USB button (12) to switch to USB mode from another source. Refer to “MP3/USB Operation” on page 15 for additional operating instructions.

***NOTE: USB will not support Apple device playback. The USB input supplies up to 1A of charging current.***

## Clock Display

Press the **VIEW** button (25) to alternate between playing time and clock time while in Tuner, CD, DVD, USB, ARC or auxiliary input mode.

## Clock Setup

Press and Hold the clock **HOUR** or **MINUTE** button (28, 30) to access clock setup mode. The number representing the hours and minutes will flash. Press the **HOUR** button (28) to adjust the hour and press the **MINUTE** button (30) to adjust minutes. The new time will be saved five seconds after the last adjustment is made.

## Sleep Timer

The Sleep Timer will automatically turn off the JWM452 in the designated number of minutes. To set the Sleep Time, press the **SLEEP** button (26) and the sleep time will appear in the display with the number representing the minutes (SLEEP 15). Press **SLEEP** button repeatedly to change the sleep time from 0 (OFF), 15, 30, 45 or 60 minutes.

## Alarm Setting

To set the alarm, press and hold the **ALARM** button (24) for 2 seconds and the clock digits will be flashing. Press the **HOUR** button to adjust the hour once at a time or press and hold to advance rapidly. Repeatedly press the **MINUTE** button to adjust the minute one digit at a time, or press and hold to advance rapidly.
Press the **ENTER** button to save the alarm time and exit the alarm setting menu.
Once a time is set, press **ALARM** (24) to turn the alarm function on or off.
If the new alarm time is not confirmed by pressing the **ENTER** button, the unit will automatically exit the alarm setting menu after 5 seconds of inactivity and the new alarm time will be set.

## Remote Sensor

Infrared receiver (18) is located on the upper left of front panel to receive infrared signal emitted by the remote control.

## Speaker Output

The two speaker output buttons (15, 17) (Zone A, Zone B) control speaker zones output from the radio. Press any of the two buttons to turn the corresponding speaker zone on or off. SPK A (Zone A), SPK B (Zone B) will appear on the display.

## Reset

The reset button should be activated for the following reasons:

- Initial installation of the unit when all wiring is completed.
- Function buttons do not operate.
- Error symbol on the display.

Use a ball point pen or similar object to press the **RESET** button (21). This may be necessary should the unit display an error code.

## HDMI ARC

Connect HDMI cable to JENSEN TV with ARC function and JWM452 radio head unit. If the set up and operation is correct, the TV audio will come out from the speaker of the head unit after switching to HDMI ARC mode.

The reset button should be activated for the following reasons:

| No | Device Status | | User Operation | Operation Results | | Remarks |
|---|---|---|---|---|---|---|
| | Head Unit | TV | | Head Unit | TV | |
| 1 | Power ON (HDMI ARC) | Power ON | Power OFF TV | Power OFF | Power OFF | |
| 2 | Power OFF | Power OFF | Power ON TV | Power OFF | Power ON | |
| 3 | Power OFF (Last mode is HDMI ARC before Power OFF) | Power OFF | Power ON Head Unit | Power ON (HDMI ARC) | Power ON (Last mode before power off) | |
| 4 | Power OFF (Last mode is HDMI ARC before Power OFF) | TV, AV, USB, HDMI (non HDMI ARC) | Power ON Head Unit | Audio Out | No Audio Out | If the TV can play the device automatically, there will be TV audio out. Otherwise, switch to USB mode to play the device. |
| 5 | Power ON (HDMI ARC) | TV, AV, USB, HDMI (non HDMI ARC) | Power OFF Head Unit | No Audio Out | Audio Out | |
| 6 | DISC Mode | Display disc content | Switch TV to another mode (such as TV, AV, USB, non-HDMI ARC mode) | Switch to HDMI ARC Mode and Audio out from Head unit in HDMI ARC mode | No Audio Out | |
| 7 | HDMI ARC Mode | TV, AV, USB, HDMI (non HDMI ARC) | Switch Head unit to another mode(Such as FM, Bluetooth, DVD or AUX) | No Audio out (No HDMI ARC Audio Out) | Audio Out | TV Speaker ON |
| 8 | HDMI ARC Mode | TV, AV, USB, HDMI (non HDMI ARC) | TV Audio Receiver OFF | No Audio Out | Audio Out | TV Speaker ON |
| | | | TV Audio Receiver ON | Audio Out | No Audio Out | TV Speaker ON |
| 9 | HDMI ARC Mode | TV, AV, USB, HDMI (non HDMI ARC) | TV CEC Mode OFF | No Audio Out | Audio Out | TV Speaker ON |
| | | | TV CEC Mode ON Audio Recevier ON | Audio Out | No Audio Out | TV Speaker ON |

# TUNER OPERATION

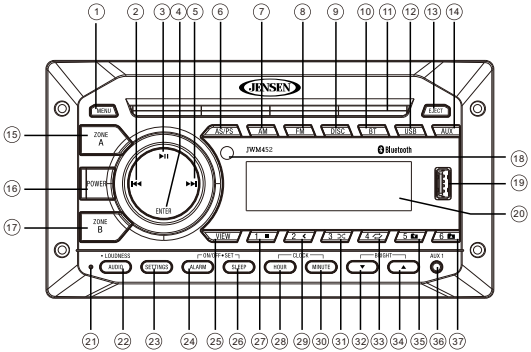


## Select a Band

1. Press **AM** button (7) repeatedly to select the band (AM1, AM2).
2. Press **FM** button (8) repeatedly to select the band (FM1, FM2 and FM3).

## Manual Tuning

Press the **>>|**or**|<<** buttons (5, 2) to seek stations up/down step by step.

## Auto Seek Tuning

Press and Hold the **>>|** or **|<<** buttons (5, 2) to automatically seek to the next or previous strong station.

## Preset Stations Menu

Six numbered preset buttons store and recall stations for each AM and FM band.

***Store a Station***

Select a band (if needed), then select a station. Press and Hold a 1-6 preset button for 2 seconds, the preset number will appear on the display.

***Recall a Station***

Select a band (if needed), Press a 1-6 preset button to select the corresponding stored station.

## Automatically Store / Preset Scan (AS/PS)

***Automatically Store***

Select an AM or FM band. Press and Hold the **AS/PS** button (6) for more than 3 seconds and the unit will automatically scan for and store 12 or 18 strongest station for all bands. To stop this function before the automatic storing is complete, press **AS/PS** again.

***Preset Scan***

Select a band. Press **AS/PS** button (6) to scan stations stored in the current band. The unit will pause for 10 seconds at each preset station. Press **AS/PS** again to stop scanning when the desired station is reached.

# DISC OPERATION

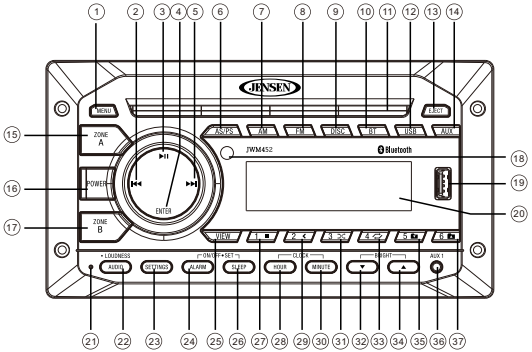


# CD OPERATION

## Inserting a CD

Insert a CD label-side up into the disc slot (11) and the disc will begin to play automatically.

## Ejecting a CD

Press the **EJECT** button (13) to stop CD play and eject the CD.

## Pausing Playback

Press the **▶II** button (3) to suspend or resume disc play.

## Stop Playback

Press the **1 ■** button (27) to suspend disc play. Press the **▶II** button (3) to resume disc playback from the last position. Press **1 ■** button twice and "STOP" will appear on the display.

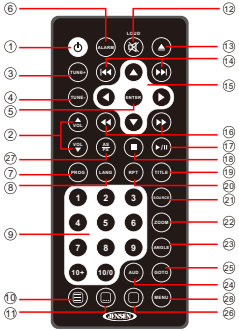


## Track Select

Press the **>>|** or **|<<** button (5, 2) to advance to the next or previous track on the CD. The selected track number will appear on the display. Press the **▶II** button (3) to start the playback of the selected track.

## Fast Forward/Reverse

Press and hold the **>>|** or **|<<** button (5, 2) or press the **>>** or **<<** buttons on the remote control (14) once for FORWARD X 2. Press and hold additional times for FORWARD X 4, X 8, X 20 or PLAY. Press the **▶II** button on the control panel (3) or remote control (17) to end fast forward or reverse and resume normal playback.

## Intro Scan (INT)

Press the **AS/PS** button (6) during disc play to play the first 10 seconds of each track on the current disc. Press **AS/PS** button (6) again to end the scan and play the selected track.

## Repeat (RPT)

Press the **4** button (33) or **RPT** buttons on the remote control (20) to access the repeat function. Press again to continuously repeat the selected track (RPT ONE). Press the third time to repeat all tracks (RPT ALL). Press one more time to stop the repeat function (RPT OFF).

## Random Shuffle (RDM)

Press the **3** button (31) to play all tracks on a CD in random, shuffled order (RDM ON). Press **3** again to stop random play (RDM OFF).

## Programmed Playback

1. Press the **PROG** button (7) on the remote control to access the programmed playback screen.
2. Use the ◀ ▶ or ▲▼ cursor buttons (15) on the remote control to access the fields on the "PROG" screen.
3. Use the number buttons on the remote control to enter a track number in each field.
4. Press the **▶/||** button (17) on the remote control or highlight "PLAY" on screen and then press the **ENTER** button (5) to begin playback in the numbered order indicated to delete the list, highlight "CLEAR" and then press **ENTER**. Press **PROG** to exit the programmed playback screen.

### Remote Control Direct Track Entry

To select a track directly, use the number pad on the remote control (9).
For single digit entries, press the corresponding number. For two digit entries, press the **10+** button followed by the last digit (i.e., for track 16, press 10+ and then 6).

### GOTO Direct Track/Chapter Access

Use the GOTO function to access a track (chapter) directly.

1. Press the **GOTO** button (25) on the remote control. The On Screen Display information will appear with the track number highlighted.
2. Use the number keys on the remote control to enter the 3-digit track number directly (i.e. for track 10, enter "010")
3. Press the **ENTER** button (5) to confirm and begin playback.

### CD Playback Information

The following information is displayed at the top of the screen during CD playback:

CD TRK 1/18 00 :03 :26

TRK ##/## –"1/18" indicates the first of 18 tracks on the CD is currently playing.
"X" indicates repeat play is OFF, "1" indicates repeat track, and "A" indicates repeat disc.
Press the button on the remote control (26) repeatedly to view the following information for elapsed/remaining playing time:
00:02:18 –total elapsed playing time of current track;
C –00 :34 :37–remaining playing time of current track;
T 00:02:18 –total elapsed playing time for current disc;
T–00 :34 :37 –remaining playing time for current disc.

## DVD/VCD OPERATION

### Inserting a Disc

Insert a disc label-side up into the disc slot (11) and the disc will begin to play.

### Ejecting a DVD

Press the **EJECT** button (13) to stop DVD play and eject the DVD.

### Play/Pausing Playback

Press the **▶II** button (3) to suspend or resume disc play.

### Stop Playback

Press the **1 ■** button (27) to suspend disc play, and "PRE STOP" will appear in the display. Press the **▶II** button (3) to resume disc play from the last position. Press the **1 ■** button(27) again and "STOP" will appear on the display.

### Track Select

Press the **>>|** or **|<<** button (5, 2) to advance to the next or previous track on the disc. The selected track number will appear on the display.

### Menu Select

While in menu mode, press the **BAND DVD MENU** button (1) to select a menu option.

### Fast Forward/Reverse

Press and hold the **>>|** or **|<<** button (5, 2) or press the **>>** or **<<** buttons on the remote control (16) once for FAST FORWARD/REVERSE X 2. Press and Hold additional times for FORWARD X 4, X 8, X 20 or PLAY. Press the **▶II** button (3) on the control panel or remote control (17) to end fast forward or reverse and resume normal playback.

### Repeat Chapter/Title

Press the **4** button (33) on the control panel or the RPT button (20) on the remote control multiple times during playback to select from the following repeat play options:

- VCD: RPT 1(track), RPT ALL(disc), RPT OFF
- DVD: RPT Chapter, RPT TITLE, RPT ALL, RPT OFF

### Programmed Playback

1. Press the **PROG** button (7) on the remote control to access the programmed playback screen.

2. Use the ◄► or ▲▼ cursor buttons (15) on the remote control to access the fields on the "PROG" screen.
3. Use the number buttons on the remote control to enter a track number in each field.
4. Press the ►/|| button (3) on the remote control or highlight "PLAY" on screen and then press the **ENTER** button (4) to begin playback in the numbered order indicated. To delete the list, highlight "CLEAR" and then press **ENTER**. Press **PROG** to exit the programmed playback screen .

## DVD Playback Features

The following remote control features, along with many others, are available during DVD playback (see "Remote Control Operation" on page 19 & 20 for complete functionality):

- LANG: Press to choose an alternate audio language, if available.
- SUBTITLE: Press to select an alternate subtitle language, if available.
- ANGLE: Press to select an alternate viewing angle, if available.
- ZOOM: Press to zoom the picture at ZOOM 2, ZOOM 3, ZOOM 4, ZOOM 1/2, ZOOM 1/3 or ZOOM 1/4, or select OFF to return to normal view.

***NOTE: Feature availability is dependent upon DVD embedded information.***

## Playback Information

During DVD playback, press the ▢ button (26) on the remote control to display playback information on the screen, including the media playing and current playback time.
Pressing the ▢ button to display additional information, as indicated below.

## DVD Playback Information

The following information is displayed at the top of the screen during DVD playback:

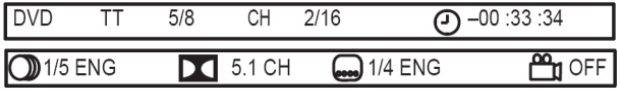


TT 5/8 – "5 / 8" indicates the fifth of 8 titles on the DVD is currently playing.
CH 2/16 – "2 / 16" indicates that the second of 16 chapters on the DVD is currently playing.
Press ▢ repeatedly to view the following information: for elapsed/remaining playing time:

00:02:18 –total elapsed playing time of the current track;
C –00:34:37 –remaining playing time of the current track;
T 00:02:18 –total elapsed playing time for disc;
T –00:34:37 –remaining playing time for disc.
1/5 ENG –English is the selected audio language out of 5 possible choices;
5.1 CH –The current language is recorded in 5.1 surround sound;
1/4 ENG –English is the selected subtitle language out of 4 possible choices;
OFF –There are no alternate angles recorded for this scene.

## Remote Control Direct Track Entry

To select a track directly, use the number pad on the remote control (9).
For single digit entries, press the corresponding number. For two digit entries, press the **10+** button followed by the last digit (i.e., for track 16, press **10+** and then **6**).

## GOTO Direct Track/Chapter Access

Use the **GOTO** function to access a track (chapter) directly.

1. Press the **GOTO** button (25) on the remote control. The On Screen Display information will appear with the track number highlighted.
2. Use the number keys on the remote control to enter the 3-digit track number directly (i.e. for track 10, enter "010").
3. Press the **ENTER** button to confirm and begin playback.

# MP3/USB OPERATION

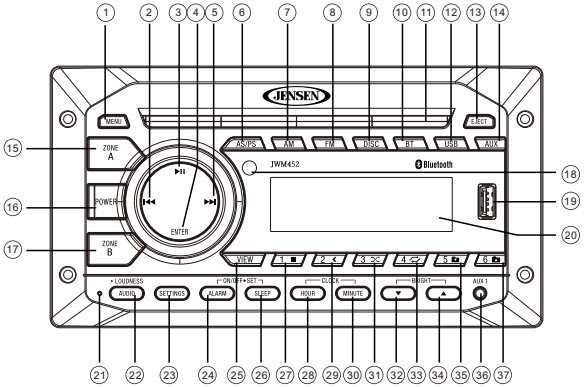


## Inserting a USB Device

The **USB** connector (12) is at the right side of the panel. Insert a USB device to automatically access USB mode and begin playback. The LCD will display "LOADING" and "USB" while files are initially loaded. When USB is removed, it will automatically back to the previous mode before the USB is connected. During other playback mode, when USB is connected, press **USB** (12) to enter USB playback mode directly.

***NOTE: MP4 video format is not supported.***

## MP3 Specifications

Notes on MP3 Playback:

- Any directory that does not include a MP3 file is skipped.
- Maximum number of folders: 512 (including skipped directories).

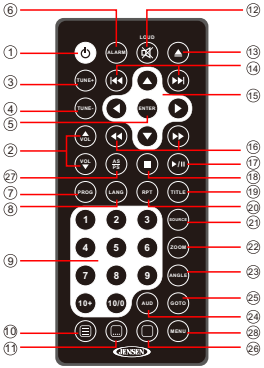


Maximum number of folder levels: 12
Maximum number of MP3 files: 999
Maximum number of characters for MP3 files name and folder name: 32
Maximum number of Characters of ID3 Tag:

- ID3 Tag version 1.0: 32
- ID3 Tag version 2.x: 32

## MP3 Monitor Display

After loading an MP3 disc or USB device, the following screen will appear on your output monitor.

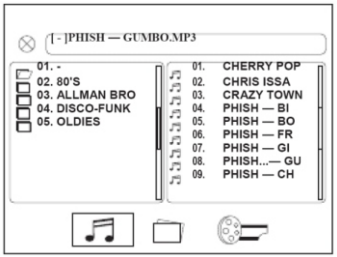


Select one of these icons to access the corresponding media on your disc or USB device. If the media type is not present, the icon will not be selectable.

Audio  Photos  :Video

## Play/Pause

Press the ▶|| button (3) to suspend or resume media playback.

## Track Select

Press the **>>|** or **|<<** button (5, 2) or **>>|** or **|<<**(14) button on the remote control to advance to the next or previous track in the current folder. The selected track number will appear on the display.

## Folder Up/Down

Press the **5** (37) to access a higher folder level (FOLDER UP).
Press the **6** (35) to access a lower folder level to access a lower folder level (FOLDER DOWN).

## Intro Scan (INT)

Press the **AS/PS** button (6) during disc play to play the first 10 seconds of each track on the current disc. Press **AS/PS** again to end the scan and play the selected track.

## Repeat (RPT)

Press the **4** button (33) on the control panel or the **RPT** button (20) on the remote control multiple times during playback to select from the following repeat play options: RPT 1 (track),RPT DIR (folder), RPT ALL (disc), OFF.

## Random Shuffle (RDM)

Press the **4** button (31) during song playback to play all files in random, shuffled order. Press the **4** button (31) again to stop random play.

## Fast Forward/Reverse

Press and hold the **>>|** or **|<<** buttons or press the **>>** or **<<** buttons on the remote control (16) once for FORWARD X 2. Press and hold additional times for FORWARD X 4, X 8, X 20 or PLAY. Press the **▶||** button on the control panel (3) or remote control (17) to end fast forward or reverse and resume normal playback.

## Programmed Playback

1. Press the **PROG** button (7) on the remote control to access the programmed playback screen.
2. Use the ◄ ► or ▲ ▼ cursor buttons (15) on the remote control to access the fields on the "PROG" screen.
3. Use the number buttons on the remote control to enter a track number in each field.
4. Press the **▶/||** button (17) on the remote control or highlight "PLAY" on screen and then press the **ENTER** button (5) to begin playback in the numbered order indicated To delete the list, highlight "CLEAR" and then press **ENTER**. Press **PROG** to exit the programmed playback screen.

## Remote Control Direct Track Entry

To select a track directly, use the number pad on the remote control (9).
For single digit entries, press the corresponding number. For two digit entries, press the **10+** button followed by the last digit (i.e., for track 16, press **10+** and then **6**).

## GOTO Direct Track/Chapter Access

Use the **GOTO** function to access a track (chapter) directly.

1. Press the **GOTO** button (25) on the remote control. The On Screen Display information will appear with the track number highlighted.
2. Use the number keys on the remote control to enter the 3-digit track number directly (i.e. for track 10, enter "010")
   Press the **ENTER** button to confirm and begin playback.

## MP3 Playback Information

The following information is displayed at the top of the screen during CD playback:
TRK ##/## – "9/150" indicates the ninth of 150 tracks on the disc is currently playing.
"X" indicates repeat play is OFF, "1" indicates repeat song, and "D" indicates repeat directory (folder).
Press button (26)repeatedly to view the following information for elapsed/remaining playing time:
00:02:18 – total elapsed playing time for disc
C –00:34:37 – remaining playing time
T 00:02:18 – total elapsed playing time for current track
C –00:34:37 – remaining playing time for current track

# BLUETOOTH OPERATION

The JWM452 includes built-in Bluetooth technology that allows you to connect this head unit to Bluetooth devices for streaming audio playback.

## About Bluetooth Technology

Bluetooth wireless technology is a short-range wireless radio protocol. Operating in the 2.4 GHz range, it transmits audio and data at speeds up to 2.1 Mbit/s over a range of up to 10 meters.

## Bluetooth Menu Options

***NOTE: Please note that some Bluetooth menu options are only available while the unit is in Bluetooth Audio mode.***

Press the **SETTING** button (23) to enter menu adjustment mode. Repeatedly press the **>>|** or **|<<**buttons (5, 2) or **SETTINGS** button (23) to access the "Bluetooth On/Off" menu function. Rotate the volume encoder knob to select BLUETOOTH ON, the press the **ENTER** button (4) to turn the Bluetooth function On or Off. The following additional menu options are available when the unit is in Bluetooth mode.

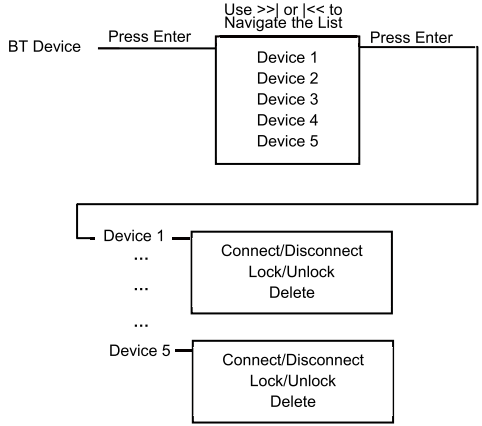


- **Bluetooth Pair (ENTER):** Press and hold the **BT** button (10) for 3 seconds to start pairing with a Bluetooth enabled device.
- **Bluetooth Device:**Press the **ENTER** button to view a list of previously paired mobile devices models. Press the **>>|** or **|<<** buttons to view devices from the list. You cannot delete a device that is actively connected. Press the **ENTER** button to select the device. Press the **>>|** or **|<<** button to choose Lock/Unlock, Connect/Disconnect or Delete for this device.
  - **DISCONNECT/CONNECT:** To disconnect a paired device, press the **ENTER** knob button to temporarily remove the BT link. The link can be re-established through your phone menu by selecting the JWM452 for connection.
  - **LOCKED/UNLOCKED:** The JWM452 can store up to 5 devices for BT connection. The devices are stored in FIFO (First In First Out) order. To prevent a device from being bumped from the list when more than 5 devices are used, you must lock the device. To Lock/Unlock a device, press the **ENTER** button.
  - **DELETE:** To delete a device from the list, Press the **ENTER** button.

## Pairing a Bluetooth Device

Before you begin, consult the owner's manual for the Bluetooth device you want to pair with the JWM452.
Make sure the device you intend to pair with is on and ready to pair.
Press **BT** button (10) to enter Bluetooth mode.
Press & Hold **BT** button to start Bluetooth pairing process. The JWM452 will display "PAIRING" and will be available to pair for 120 seconds.
In your device Bluetooth settings, select "JWM452" to connect.

## Answering a Call

When answering a call using the connected phone, BT AUDIO will pause. After hanging up from the call, BT AUDIO will automatically resume on some phones. It may be necessary to press the play button to resume BT AUDIO.

## Bluetooth Audio (A2DP)

The A2DP music is available for Bluetooth enabled phones when the phone is connected. To access Bluetooth mode and play songs stored in your phone, press the **BT** button (10) to enter the Bluetooth mode.

**Selecting Tracks**
During playback, press the **>>|** or **|<<** button (5, 2) to play the previous or next track.

**Pausing Playback**
During playback, press the ▶ II button (3) to pause the Bluetooth audio playback. "BT PAUSE" will appear on the LCD. Press ▶ II button again to resume playback.
If you change to another mode, the mobile device audio will pause. Press the **BT** button (10) to return to Bluetooth mode and resume mobile phone audio playback.

***NOTE: If a Bluetooth device is disconnected due to the power being turned off or if the device is disconnected inadvertently, the unit will automatically search for the matching BT mobile phone when the power is restored.***

# REMOTE CONTROL OPERATION

| REF | DESCRIPTION | TUNER | BLUETOOTH | CD/MP3/USB | DVD |
|---|---|---|---|---|---|
| 1 | Power | Turn radio on/standby mode. | Turn radio on/standby mode. | Turn radio on/standby mode. | Turn radio on/standby mode. |
| 2 | VOL +/- | Adjust volume up/down. Press for Audio Control Setup menu. | Adjust volume up/down. Press for Audio Control Setup menu. | Adjust volume up/down. Press for Audio Control Setup menu. | Adjust volume up/down. Press for Audio Control Setup menu. |
| 3 | TUNE + | Tune to higher station | | | |
| 4 | TUNE - | Tune to lower station | | | |
| 5 | ENTER | | | Confirm menu selection | Confirm menu selection |
| 6 | ALARM | Turn the alarm feature on/off. | Turn the alarm feature on/off. | Turn the alarm feature on/off. | Turn the alarm feature on/off. |
| 7 | PROG | | | Display Program Play Menu | Display Program Play Menu |
| 8 | LANG | | | Display MONO/L, MONO/R or STEREO. | Select alternate audio language, if available. |
| 9 | Numeric Keyboard | Use 1-6 to access preset stations. | | Enter track number to access track directly. For track Number > 10, use 10+ followed by second digit. | Enter track number to access track directly. For track Number > 10, use 10+ followed by second digit. |
| 10 | Setup | | | View SETUP menu. | View SETUP menu. |
| 11 | Subtitle | | | | Choose subtitle language, if available. |
| 12 | Mute/LOUD | Silence Audio output. Press and hold to turn LOUDNESS feature on/off. | Silence Audio output. Press and hold to turn LOUDNESS feature on/off. | Silence Audio output. Press and hold to turn LOUDNESS feature on/off. | Silence Audio output. Press and hold to turn LOUDNESS feature on/off. |
| 13 | Eject | Eject Disc. | Eject Disc. | Eject Disc. | Eject Disc. |
| 14 | Previous/Next | | Select next/previous track. | Select next/previous track. | Select next/previous track. |
| 15 | Directional Buttons | | | Move to desired menu item and then press ENTER to confirm. | Use with DVD menu to move to desired menu item and then press ENTER to confirm |
| 16 | Fast Reverse/ Forward | | | Fast Forward 2X, 4X, 8X, 20X.Fast Reverse 2X, 4X, 8X, 20X. | Fast Forward 2X, 4X, 8X, 20X.Fast Reverse 2X, 4X, 8X, 20X. |
| 17 | Play/Pause Stop | | Pause/resume playback | Pause/resume playback | Pause/resume playback |
| 18 | Stop | | | Stop playback. | Stop playback. |

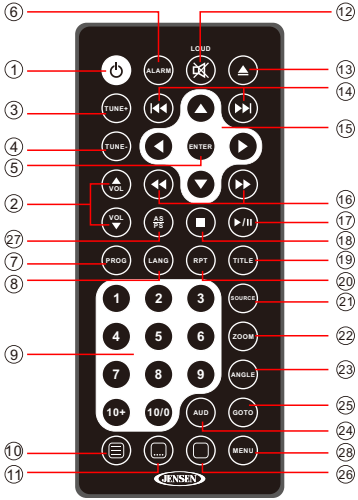

| | | | | | |
|---|---|---|---|---|---|
| 19 | TITLE | | | | Press to view title menu. Use directional arrows and play button to play selected title. May not be supported by all discs. |
| 20 | RPT | | | Repeat track | Repeat chapter |
| 21 | SOURCE | Select source for playback | Select source for playback | Select source for playback | Select source for playback |
| 22 | ZOOM | | | | Zoom picture or press repeatedly to change magnification level. |
| 23 | ANGLE | | | | Select alternate viewing angle, if available. |
| 24 | AUD | Access Audio Menu options. | Access Audio Menu options. | Access Audio Menu options. | Access Audio Menu options. |
| 25 | GOTO | | | Select exact time, track or chapter for playback. | Select exact time, track or chapter for playback. |
| 26 | Display | | | Display current playback information on the screen. | Display current playback information on the screen. |
| 27 | AS/PS | Browse preset stations (10 sec. interval). Press and hold to scan/store stations. | | | |
| 28 | MENU | Access system MENU. | Access system MENU. | Access system MENU. | Press to access system MENU. Press and hold to access DVD MENU. |

# DVD SETUP MENU

Press the button (10) on the remote control to access the SETUP menu and adjust system settings for the following categories:

- System Setup
- Language Setup
- Audio Setup
- Video Setup
- Speaker Setup
- Digital Setup

While in the setup menus, use your directional arrows to select and change settings. The "up"and "down" arrows highlight the options, and the "right" and "left"arrows will change the setting for the highlighted option.

## System Setup

The System Setup menu controls the following features:

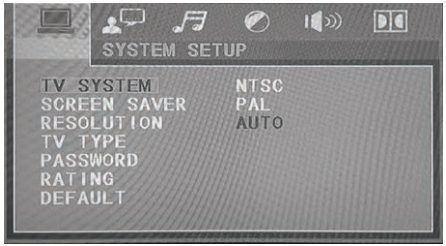


- TV System: This item is used to select a TV signal system to match your TV set. Select one of the following options: AUTO, NTSC or PAL.
- Screen Saver: Turn Screen Saver feature On/Off.
- Resolution: The fitness of detail that can be distinguished in an image. Select one of the following options: 480I/576L, 480I/576P, 720P, 1080I, 1080P.
- TV Type: Select one of the following picture formats: 4:3PS, 4:3 LB or 16:9. 4:3 is a letterboxselection, and 16:9 is wide screen.
- Password: This item allows the selection of a new four-digit code to use for securitypurposes.
- Rating: Select the parental control level for all DVD play. The security password is required to make changes to this feature.
- Default: Use this item to restore default settings at any time.

## Lanuage Setup

The Language Setup menu controls the following features:

- On-Screen Display (OSD) Language: Set the OSD language to one of the following: English, German, Spanish, French, or Portuguese.
- Audio Language: Set the audio language to one of the following: Chinese, English, Japanese, French, Spanish, Portuguese, Latin or German.
- Subtitle Language: Set the subtitle language to one of the following: Chinese, English, Japanese, French, Spanish, Portuguese, German or OFF.
- Menu Language: Set the menu language to one of the following: Chinese, English, Japanese, French, Spanish, Portuguese, German or Latin.
- CEC: Default setting "ON" allows power ON/OFF and source selection controls betweendevices connected via HDMI. Turn "OFF" to disable this feature.

## Audio Setup

The Audio Setup menu controls the following features:

- Audio Out: This item defines the digital output format.
- HDMI Audio: Choose AUTO or PCM.
- Key: This item changes the audio output key.

## Video Setup

The Video Setup menu controls the following features:

- Brightness: Adjust the brightness of the screen from the following levels: 12, 10, 8, 6, 4, 2 or 0.
- Contrast: Adjust the contrast of the screen from the following levels: 12, 10, 8, 6, 4, 2 or 0.
- Hue: Adjust the hue of the screen from the following levels: +6, +4, +2, 0, -2,-4 or -6.
- Saturation: Adjust the saturation of the screen from the following levels: 12, 10, 8, 6, 4, 2 or 0.
- Sharpness: Adjust the sharpness of the screen from the following levels: 8, 6, 4, 2 or 0.

## Speaker Setup

The Speaker Setup menu controls the following features:

- Downmix: Choose LT/RT, STEREO or VSS.
- Front: Choose LARGE or SMALL.

## Digital Setup

The Digital Setup menu controls the following features:

- OP Mode: Select LINE OUT or RF REMOD.
- Dynamic Range: Select FULL, 6/8, 4/8, 2/8 or OFF.
- Dual Mono: Select STEREO, MONO/L, MONO/R or MIX MONO.

# CARE AND MAINTENANCE

- Keep the product dry. If it does get wet, wipe it dry immediately. Liquids might contain minerals that can corrode the electronic circuits.
- Keep the product away from dust and dirt, which can cause premature wear of parts.
- Handle the product gently and carefully. Dropping it can damage circuit boards and cases, and can cause the product to work improperly.
- Wipe the product with a dampened cloth occasionally to keep it looking new.
- Do not use harsh chemicals, cleaning solvents, or strong detergents to clean the product.
- Use and store the product only in normal temperature environments. High temperature can shorten the life of electronic devices, damage batteries, and distort or melt plastic parts.

## Ignition

The most common source of noise in reception is the ignition system. This is a result of the radio being placed close to the ignition system (engine). This type of noise can be easily detected because it will vary in intensity of pitch with the speed of the engine.
Usually, the ignition noise can be suppressed considerably by using a radio suppression type high voltage ignition wire and suppressor resistor in the ignition system. (Most vessels employ this wire and resistor but it may be necessary to check them for correct operation.) Another method of suppression is the use of additional noise suppressors. These can be obtained from most CB/A radio or electronic supply shops.

## Interference

Radio reception in a moving environment is very different from reception in a stationary environment (home). It is very important to understand the difference. AM reception will deteriorate when passing under a bridge or when passing under high voltage lines. Although AM is subject to environmental noise, it has the ability to receive at great distance. This is because broadcasting signals follow the curvature of the earth and are reflected back by the upper atmosphere.

# TROUBLESHOOTING

| Symptom | Solution |
|---|---|
| Radio will not turn ON or No front panel operation | Try the reset button. |
| | Check fuse. |
| | Check 12V+ on accessory wire to radio (RED wire) |
| | Check Ground. |
| Radio turns ON, but no sound | Verify Volume, Fader/Balance, Mute controls are set correctly (see owner's manual). |
| | Try the reset button. |
| | Verify proper speaker selection. |
| | Verify proper speaker connections. |
| | Check for shorts or open circuits on speaker wires.<br>• If short on “A” channel, “B & C” channels will continue to function.<br>• If short on “B and/or C” channels, “A” channel will continue to function. |
| Display is blank | Turn unit off and on to reset the display. |
| Bluetooth Device will not connect/pair | Make sure no devices are already connected. Disconnect any connected devices. |
| | On your smart device, turn the Bluetooth off and on and try again. |
| CD/DVD does not load fully | Make sure unit has power and no other CD/DVD is currently inside. |
| | Make sure the disc is a compatible disc. |
| CD/DVD does not load fully | Check to make sure disc is inserted correctly. |
| | Verify disc is free from dirt, scratches, etc. |
| | Check with factory Cds. |
| | Check factory original CDs for compatibility warnings (due to various copy-protection, multimedia content, etc.). |
| No AM or FM reception | Verify you are tuned to a valid station. |
| | Check your antenna connection on rear of stereo. |
| | Try a different antenna |
| DVD plays sound but no video | Make sure the HDMI cable is routed from the HDMI output to the input on the television. |
| Unit does not respond to Remote Control | Verify that you have a clear line of sight for the IR signal. |
| | Check the batteries. |

# SPECIFICATIONS

**FM Tuner**
Frequency Coverage (USA) . . . . . .87.5 to 107.9 MHz
Frequency Coverage (Europe) . . . . . 87.5 to 108 MHz
Sensitivity . . . . . <4 µV
Stereo Separation@1 kHz . . . . . >25 dB
**AM Tuner**
Frequency Range (USA). . . . . 530-1710 kHz
Frequency Range (Europe). . . . . 522-1620 kHz
Sensitivity (S/N=20dB) . . . . . <63 µV
Amplifier
Output Power . . . . . ..6W x 8
Output Impedance . . . . . .Compatible with 4-8 Ω ohms speakers, 4 ohm load minimum
**DVD**
Frequency Response . . . . . 20-20,000 Hz
Channel Separation . . . . . 50 dB
S/N Ratio . . . . . 65 dB
Distortion . . . . . 0.5%
**General**
Power Supply Requirements . . . . . DC 12 Volts, Negative Ground
Operating Voltage . . . . . 10-16 VDC
Overall Dimensions . . . . . 208.0mm (W) x 110.0mm (D) x 130.0mm (H)
. . . . . 8.9” (W) x 4.33” (D) x3.39” (H)
Mounting Dimensions . . . . . .....180mm (W) x 133mm (D) x 86mm (H)
. . . . . .....7.09” (W) x 5.2” (D) x 3.39” (H)
Weight. . . . . .1.45 KG
. . . . . .3.2 lbs

## FCC Notes

NOTE: This equipment has been tested and found to comply with the limits for a Class B digital device, pursuant to Part 15 of the FCC Rules. These limits are designed to provide reasonable protection against harmful interference in a residential installation. This equipment generates uses and can radiate radio frequency energy and, if not installed and used in accordance with the instructions, may cause harmful interference to radio communications. However, there is no guarantee that interference will not occur in a particular installation. If this equipment dose cause harmful interference to radio or television reception, which can be determined by turning the equipment off and on, the user is encouraged to try to correct the interference by one or more of the following measures:

---Reorient or relocate the receiving antenna.
---Increase the separation between the equipment and receiver.
---Connect the equipment into an outlet on a circuit different from that to which the receiver is connected.
---Consult the dealer or an experienced radio/TV technician for help.

WARNING: Changes or modifications not expressly approved by the party responsible for compliance could void the user’s authority to operate the equipment. This equipment complied with FCC radiation exposure limits set forth for an uncontrolled environment. This equipment should be installed and operated with minimum distance 20cm between the radiator & your body.

NOTE: The manufacturer is not responsible for any radio or TV interference caused by unauthorized modifications to this equipment. Such modifications could void the user's authority to operate the equipment.

asa ELECTRONICS™
2602 Marina Drive • Elkhart, IN 46514
www.asaelectronics.com